chanhvinh.com

CJ-series Output Units

CJ1W-OC/OA/OD

CSM_CJ1W-OUTPUT_DS_E_8_12

A Wide Range of Basic Output Units for High Speed Output and Different Applications

- These Output Units receive the results of output instructions from the CPU Unit and perform ON/OFF control for external devices.
- High-speed Output models CJ1W-OD213 and CJ1W-OD234 can help to increase system throughput.



CJ1W-OD213



CJ1W-OD234

Features

- High-speed output models are available, meeting versatile applications.
  ON Response Time: 15μs, OFF Response Time: 80μs
- Output Units are available with any of three output types: relay contact outputs, triac outputs, or transistor outputs.
- For transistor outputs, select from sinking outputs or sourcing outputs.
- Output Units with load short-circuit protection are also available. *1
- Select the best interface for each application: Fujitsu / OTAX connectors or MIL connectors. *2
- A wide variety of Connector-Terminal Block Conversion Units are available to allow you to easily wire external output devices.

*1. The following Units have load short-circuit protection: CJ1W-OC202, CJ1W-OD204, CJ1W-OD212, and CJ1W-OD232.
*2. Available for models with 32 outputs or 64 outputs

chanhvinh.com

Ordering Information

International Standards

- The standards are abbreviated as follows: U: UL, U1: UL (Class I Division 2 Products for Hazardous Locations), C: CSA, UC: cULus, UC1: cULus (Class I Division 2 Products for Hazardous Locations), CU: cUL, N: NK, L: Lloyd, and CE: EC Directives.
- Contact your OMRON representative for further details and applicable conditions for these standards.

Output Units

Unit type	Product name	Specifications					No. of words allocated	Current consumption (A)		Model	Standards
		Output type	I/O points	Maximum switching capacity	Commons	External connection		5 V	24 V		
CJ1 Basic I/O Units	Relay Contact Output Units 	–	8 outputs	250 VAC/24 VDC, 2 A	Independent contacts	Removable terminal block	1 words	0.09	0.048 max.	**CJ1W-OC201**	UC1, N, L, CE
		–	16 outputs	250 VAC/24 VDC, 2 A	16 points, 1 common	Removable terminal block	1 words	0.11	0.096 max.	**CJ1W-OC211**	
	Triac Output Unit 	–	8 outputs	250 VAC, 0.6 A	8 points, 1 common	Removable terminal block	1 words	0.22	–	**CJ1W-OA201**	
	Transistor Output Units 	Sinking	8 outputs	12 to 24 VDC, 2 A	4 points, 1 common	Removable terminal block	1 words	0.09	–	**CJ1W-OD201**	
		Sinking	8 outputs	12 to 24 VDC, 0.5 A	8 points, 1 common	Removable terminal block	1 words	0.10	–	**CJ1W-OD203**	
		Sinking	16 outputs	12 to 24 VDC, 0.5 A	16 points, 1 common	Removable terminal block	1 words	0.10	–	**CJ1W-OD211**	
		Sinking	16 outputs (High speed)	24 VDC, 0.5 A	16 points, 1 common	Removable terminal block	1 words	0.15	–	**CJ1W-OD213**	N, L, CE
		Sinking	32 outputs	12 to 24 VDC, 0.5 A	16 points, 1 common	Fujitsu / OTAX connector	2 words	0.14	–	**CJ1W-OD231**	UC1, N, L, CE
		Sinking	32 outputs	12 to 24 VDC, 0.5 A	16 points, 1 common	MIL connector	2 words	0.14	–	**CJ1W-OD233**	
		Sinking	32 outputs (High speed)	24 VDC, 0.5 A	16 points, 1 common	MIL connector	2 words	0.22	–	**CJ1W-OD234**	N, L, CE
		Sinking	64 outputs	12 to 24 VDC, 0.3 A	16 points, 1 common	Fujitsu / OTAX connector	4 words	0.17	–	**CJ1W-OD261**	UC1, N, L, CE
		Sinking	64 outputs	12 to 24 VDC, 0.3 A	16 points, 1 common	MIL connector	4 words	0.17	–	**CJ1W-OD263**	
		Sourcing	8 outputs	24 VDC, 2 A Short-circuit protection	4 points, 1 common	Removable terminal block	1 words	0.11	–	**CJ1W-OD202**	
		Sourcing	8 outputs	24 VDC, 0.5 A Short-circuit protection	8 points, 1 common	Removable terminal block	1 words	0.10	–	**CJ1W-OD204**	
		Sourcing	16 outputs	24 VDC, 0.5 A Short-circuit protection	16 points, 1 common	Removable terminal block	1 words	0.10	–	**CJ1W-OD212**	
		Sourcing	32 outputs	24 VDC, 0.5 A Short-circuit protection	16 points, 1 common	MIL connector	2 words	0.15	–	**CJ1W-OD232**	
		Sourcing	64 outputs	12 to 24 VDC, 0.3 A	16 points, 1 common	MIL connector	4 words	0.17	–	**CJ1W-OD262**	

Accessories

Connectors are not included for models with connectors. Either use one of the applicable connector listed below or use an applicable Connector-Terminal Block Conversion Unit or I/O Relay Terminal. For details on wiring methods, refer to *External Interface*.

chanhvinh.com

Applicable Connectors

Fujitsu / OTAX Connectors for 32-input, 32-output, 64-input, 64-output, 32-input/32-output, and 16-input/16-output Units

Name	Connection	Remarks	Applicable Units	Model	Standards
40-pin Connectors	Soldered	Connector: Fujitsu FCN-361J040-AU Connector Cover: Fujitsu FCN-360C040-J2 OTAX N360C040J2	Fujitsu / OTAX Connectors: CJ1W-ID231(32 inputs): 1 per Unit CJ1W-ID261 (64 inputs): 2 per Unit CJ1W-OD231 (32 outputs): 1 per Unit CJ1W-OD261 (64 outputs): 2 per Unit CJ1W-MD261 (32 inputs, 32 outputs): 2 per Unit	C500-CE404	–
	Crimped	Housing: Fujitsu FCN-363J040 OTAX N363J040 Contactor: Fujitsu FCN-363J-AU OTAX N363JAU Connector Cover: Fujitsu FCN-360C040-J2 OTAX N360C040J2		C500-CE405	
	Pressure welded	Fujitsu FCN-367J040-AU/F		C500-CE403	
24-pin Connectors	Soldered	Connector: Fujitsu FCN-361J024-AU Connector Cover: Fujitsu FCN-360C024-J2 OTAX N360C024J2	Fujitsu / OTAX Connectors: CJ1W-MD231 (16 inputs, 16 outputs): 2 per Unit	C500-CE241	
	Crimped	Socket: Fujitsu FCN-363J024 OTAX N363J024 Contactor: Fujitsu FCN-363J-AU OTAX N363JAU Connector Cover: Fujitsu FCN-360C024-J2 OTAX N360C024J2		C500-CE242	
	Pressure welded	Fujitsu FCN-367J024-AU/F OTAX N367J024AUF		C500-CE243	

MIL Connectors for 32-input, 32-output, 64-input, 64-output, 32-input/32-output, and 16-input/16-output Units

Name	Connection	Remarks	Applicable Units	Model	Standards
40-pin Connectors	Pressure welded	FRC5-AO40-3TOS	MIL Connectors: CJ1W-ID232/233 (32 inputs): 1 per Unit CJ1W-OD232/233/234 (32 outputs):1 per Unit CJ1W-ID262 (64 inputs): 2 per Unit CJ1W-OD262/263 (64 outputs): 2 per Unit CJ1W-MD263/563 (32 inputs, 32 outputs): 2 per Unit	XG4M-4030-T	–
	Crimped	–		XG5N-401*	
20-pin Connectors	Pressure welded	FRC5-AO20-3TOS	MIL Connectors: CJ1W-MD232/233 (16 inputs, 16 outputs): 2 per Unit	XG4M-2030-T	–
	Crimped	–		XG5N-201*	

* Crimp Contacts are also required. Refer to page 31 for details.

Applicable Connector-Terminal Block Conversion Units

Type	Series	Number of connector poles	Number of terminal block poles	Wiring method	Terminal type	Size: Depth (mm)	Size: Height (mm)	Size: Width (mm)	Mounting: DIN Track	Mounting: Screws	Common terminals	I/O Units	Model*	Standards
PLCs	XW2K	40	36	Push-In Plus 	Spring	75	39	40.8	Yes	---	No	CJ1W-OD231 CJ1W-OD261	XW2K-40G-O32B	---
												CJ1W-OD232 CJ1W-OD233 CJ1W-OD234 CJ1W-OD262 CJ1W-OD263	XW2K-40G-O32C	
		40	68	Push-In Plus 	Spring	124	39	40.8			Yes	CJ1W-OD231 CJ1W-OD261	XW2K-40G-O32B-OUT	
												CJ1W-OD232 CJ1W-OD233 CJ1W-OD234 CJ1W-OD262 CJ1W-OD263	XW2K-40G-O32C-OUT	
	XW2R	40	34	Phillips screw 	M3	130.7	50	48.05			No	CJ1W-OD231 CJ1W-OD261	XW2R-J34GD-C3	
												CJ1W-OD232 CJ1W-OD233 CJ1W-OD234 CJ1W-OD262 CJ1W-OD263	XW2R-J34GD-C4	
		40	34	Slotted screw (rise up) 	M3 (European type)	98.5	50	44.81			No	CJ1W-OD231 CJ1W-OD261	XW2R-E34GD-C3	
												CJ1W-OD232 CJ1W-OD233 CJ1W-OD234 CJ1W-OD262 CJ1W-OD263	XW2R-E34GD-C4	

Note: For the combination of I/O Units with Connector-Terminal Block Conversion Units, refer to *2. Connecting Connector-Terminal Block Conversion Units*.
* Representative models only. For details, refer to the XW2K series Datasheet (Cat. No. G152) and XW2R Datasheet.

Connecting Cables for Connector-Terminal Block Conversion Units

Appearance	Connectors	Cable lenght [m]	Model
XW2Z-□□□B 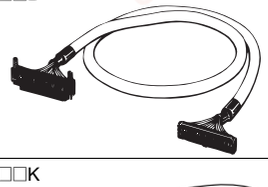	One 40-pin FCN Connector to One 40-pin MIL Connector	0.5	XW2Z-050B
		1	XW2Z-100B
		1.5	XW2Z-150B
		2	XW2Z-200B
		3	XW2Z-300B
		5	XW2Z-500B
XW2Z-□□□K 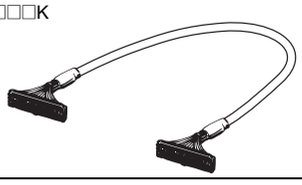	One 40-pin MIL Connector to One 40-pin MIL Connector	0.5	XW2Z-C50K
		1	XW2Z-100K
		1.5	XW2Z-150K
		2	XW2Z-200K
		3	XW2Z-300K
		5	XW2Z-500K

chanhvinh.com

Applicable I/O Relay Terminals

Type	Series	Specifications						Size (horizontal mounting)			Mounting		Model	Standards
		Classification		Polarity	Number of points	Rated ON current at contacts	Rated voltage	Horizontal (mm)	Vertical (mm)	Height (mm)	DIN Track	Screws		
Push-In Plus terminal block	G70V 	Inputs	DC inputs	NPN	16 (SPSTNO × 16)	50 mA	24 VDC	143	90	56	Yes	Yes	**G70V-SID16P *4**	UC, CE (TÜV certified)
				PNP									**G70V-SID16P-1 *4**	
				NPN									**G70V-SID16P-C16 *5**	
				PNP									**G70V-SID16P-1-C16 *5**	
		Outputs	Relay outputs	NPN	16 (SPDT × 16)	6 A/point, 10 A/ common							**G70V-SOC16P *4**	
				PNP									**G70V-SOC16P-1 *4**	
				NPN									**G70V-SOC16P-C4 *6**	
				PNP									**G70V-SOC16P-1-C4 *6**	
Standard	G7TC 	Inputs	AC inputs	NPN	16 (SPSTNO × 16)	1A	100/(110) VAC	182	85	68	Yes	No	**G7TC-IA16 AC100/110**	U, C
							200/(220) VAC						**G7TC-IA16 AC200/220**	
			DC inputs				12 VDC						**G7TC-ID16 DC12**	
							24 VDC						**G7TC-ID16 DC24**	
							100/110 VDC						**G7TC-ID16 DC100/110**	
		Outputs	Relay outputs	NPN	8 (SPSTNO × 8)	5A	12 VDC	102					**G7TC-OC08 DC12**	
							24 VDC						**G7TC-OC08 DC24**	
					16 (SPSTNO × 16)		12 VDC	182					**G7TC-OC16 DC12**	
							24 VDC						**G7TC-OC16 DC24**	
				PNP	16 (SPSTNO × 16)		12 VDC						**G7TC-OC16-1 DC12**	
							24 VDC						**G7TC-OC16-1 DC24**	
High-capacity socket	G70A *1 (Socket only) 	Inputs	Relay inputs	NPN/ PNP	16 (SPDT × 16 possible with G2R Relays)	100 mA	110 VDC max., 240 VAC max. *2	234	75	64	Yes	No	**G70A-ZOC16-5**	U, C, CE (VDE certified)
		Outputs	Relay outputs	NPN		10 A (Terminal block allowable	24 VDC						**G70A-ZOC16-3**	
				PNP									**G70A-ZOC16-4**	
Space-saving	Vertical type G70D-V 	Outputs	Relay outputs	NPN	16 (SPSTNO × 16)	5 A or 3 A *3	24 VDC	135	46	81	Yes	Yes	**G70D-VSOC16**	U, C, CE (VDE certified)
			MOSFET relay outputs			0.3 A							**G70D-VFOM16**	
	Flat type G70D 		Relay outputs	NPN	8 (SPSTNO × 8)	5 A		68	93	44	Yes	Yes	**G70D-SOC08**	–
					16 (SPSTNO × 16)	3 A		156	51	39			**G70D-SOC16**	
				PNP	16 (SPSTNO × 16)	3 A							**G70D-SOC16-1**	
			MOSFET relay outputs	NPN	16 (SPSTNO × 16)	0.3 A							**G70D-FOM16**	
				PNP									**G70D-FOM16-1 *7**	
High-capacity, space-saving	G70R 	Outputs	Relay outputs	NPN	8 (SPSTNO × 8)	10 A	24 VDC	136	93	55	Yes	Yes	**G70R-SOC08 *7**	–

*1. G70A is a I/O terminal socket product. Relay is not provided with the socket. Be sure to order a relay, timer separately.
*2. Each relay to be mounted must incorporate a coil that has proper specifications within the maximum rated voltage range.
*3. Eight or fewer points ON: 5 A, Nine or more points ON: 3 A.
*4. Internal common at terminal block: No internal connections
*5. Internal common at terminal block: Internal IO common 16 points internally connected
*6. Internal common at terminal block: Every 4 points internally connected at terminal block middle row.
*7. Product no longer available to order.

Note: 1. For the combination of Input Units with I/O Relay Terminal and Connecting Cables, refer to *3. Connecting I/O Relay Terminals*.
2. Please refer to each Datasheet about details.
3. When the G7TC is used with an AC rated voltage, three rated currents can be used. If a coil voltage of 110 or 220 VAC is used, 50 Hz cannot be used.

chanhvinh.com

Cables for I/O Relay Terminals

Type	Name	I/O Classification	Appearance	Cable length L (mm)		Models
Fujitsu/OTAX connectors (24 pins)	Cables with Connectors (1:1) XW2Z-R□C	16 I/O points	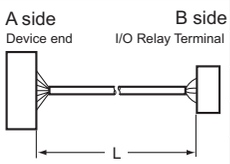	1,000		**XW2Z-R100C**
				1,500		**XW2Z-R150C**
				2,000		**XW2Z-R200C**
				3,000		**XW2Z-R300C**
				5,000		**XW2Z-R500C**
Fujitsu/OTAX connectors (40 pins)	Cables with Connectors (1:2) XW2Z-RI□C-□ XW2Z-RO□C-□	32 input points	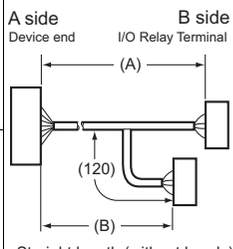 Straight length (without bends)	(A) 1,000	(B) 750	**XW2Z-RI100C-75**
				(A) 1,500	(B) 1,250	**XW2Z-RI150C-125**
				(A) 2,000	(B) 1,750	**XW2Z-RI200C-175**
				(A) 3,000	(B) 2,750	**XW2Z-RI300C-275**
				(A) 5,000	(B) 4,750	**XW2Z-RI500C-475**
		32 output points		(A) 1,000	(B) 750	**XW2Z-RO100C-75**
				(A) 1,500	(B) 1,250	**XW2Z-RO150C-125**
				(A) 2,000	(B) 1,750	**XW2Z-RO200C-175**
				(A) 3,000	(B) 2,750	**XW2Z-RO300C-275**
				(A) 5,000	(B) 4,750	**XW2Z-RO500C-475**
MIL connectors (20 pins)	Cables with Connectors (1:1) XW2Z-RI□C XW2Z-RO□C	16 I/O points	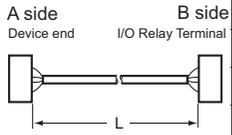	250		**XW2Z-RI25C**
				500		**XW2Z-RI50C**
				250		**XW2Z-RO25C**
				500		**XW2Z-RO50C**
MIL connectors (40 pins)	Cables with Connectors (1:2) XW2Z-RO□-□-D1, XW2Z-RI□-□-D1	32 I/O points	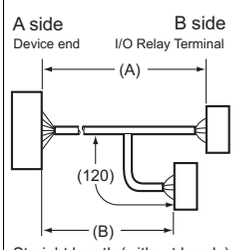 Straight length (without bends)	(A) 500	(B) 250	**XW2Z-RO50-25-D1**
				(A) 750	(B) 500	**XW2Z-RO75-50-D1**
				(A) 1,000	(B) 750	**XW2Z-RO100-75-D1**
				(A) 1,500	(B) 1,250	**XW2Z-RO150-125-D1**
				(A) 2,000	(B) 1,750	**XW2Z-RO200-175-D1**
				(A) 3,000	(B) 2,750	**XW2Z-RO300-275-D1**
				(A) 5,000	(B) 4,750	**XW2Z-RO500-475-D1**
				(A) 500	(B) 250	**XW2Z-RI50-25-D1**
				(A) 750	(B) 500	**XW2Z-RI75-50-D1**
				(A) 1,000	(B) 750	**XW2Z-RI100-75-D1**
				(A) 1,500	(B) 1,250	**XW2Z-RI150-125-D1**
				(A) 2,000	(B) 1,750	**XW2Z-RI200-175-D1**
				(A) 3,000	(B) 2,750	**XW2Z-RI300-275-D1**
				(A) 5,000	(B) 4,750	**XW2Z-RI500-475-D1**

Note: Refer to the Datasheet for the XW2Z-R Cables for I/O Relay Terminals (Cat. No. G126).

Mountable Racks

Model	NJ system		CJ system (CJ1, CJ2)		CP1H system	NSJ system*	
	CPU Rack	Expansion Rack	CPU Rack	Expansion Backplane	CP1H PLC	NSJ Controller	Expansion Backplane
CJ1W-OC201	10 Units	10 Units (Per Expansion Rack)	10 Units	10 Units (Per Expansion Backplane)	Not Supported	Not Supported	10 Units (Per Expansion Backplane)
CJ1W-OC211							
CJ1W-OA201							
CJ1W-OD201							
CJ1W-OD203							
CJ1W-OD211							
CJ1W-OD213							
CJ1W-OD231							
CJ1W-OD233							
CJ1W-OD234							
CJ1W-OD261							
CJ1W-OD263							
CJ1W-OD202							
CJ1W-OD204							
CJ1W-OD212							
CJ1W-OD232							
CJ1W-OD262							

* Product no longer available to order.

chanhvinh.com

Specifications

CJ1W-OC201 Contact Output Unit (Independent Relays, 8 Points)

Name	8-point Contact Output Unit with Terminal Block (Independent Relays)
Model	CJ1W-OC201
Max. Switching Capacity	2 A 250 VAC (cosϕ = 1), 2 A 250 VAC (cosϕ = 0.4), 2 A 24 VDC (16 A/Unit)
Min. Switching Capacity	1 mA 5 VDC
Relays	NY-24W-K-IE (Fujitsu Takamizawa Components, Ltd.), Cannot be replaced.
Service Life of Relay	Electrical: 150,000 operations (24 VDC, resistive load)/100,000 operations (240 VAC, cosϕ = 0.4, inductive load) Mechanical: 20,000,000 operations Service life will vary depending on the connected load.
ON Response Time	15 ms max.
OFF Response Time	15 ms max.
Number of Circuits	8 independent contacts
Insulation Resistance	20 MΩ between external terminals and the GR terminal (500 VDC)
Dielectric Strength	2,000 VAC between the external terminals and the GR terminal for 1 minute at a leakage current of 10 mA max.
Internal Current Consumption	90 mA 5 VDC max. 48 mA 24 VDC max. (6 mA × No. of ON points)
Weight	140 g max.
Circuit Configuration	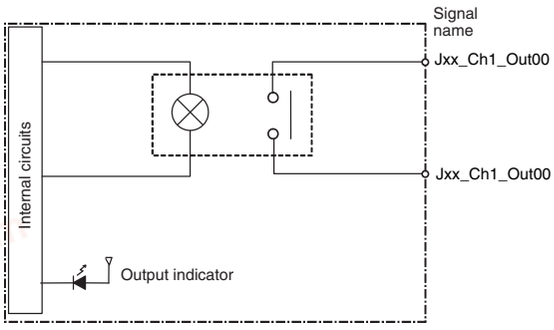 • The signal names of the terminals are the device variable names. The device variable names are the names that use "Jxx" as the device name.
External connection and terminal-device variable diagram	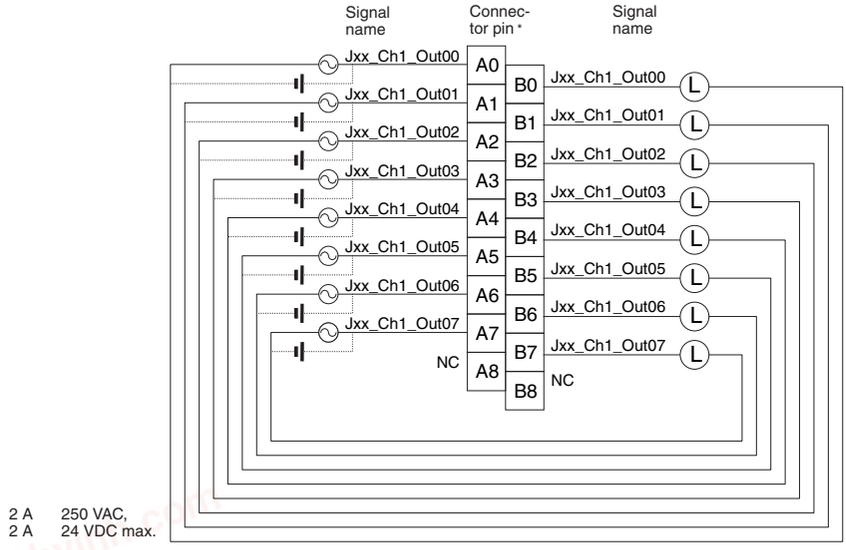 • The signal names of the terminals are the device variable names. The device variable names are the names that use "Jxx" as the device name. • The input power supply polarity can be connected in either direction.

* Terminal numbers A0 to A8 and B0 to B8 are used in the external connection and terminal-device variable diagrams. They are not printed on the Units.

Note: Although 16 I/O bits (1 word) are allocated, only 8 of these can be used for external I/O.

chanhvinh.com

CJ1W-OC211 Contact Output Unit (16 Points)

Name	16-point Contact Output Unit with Terminal Block
Model	CJ1W-OC211
Max. Switching Capacity	2 A 250 VAC (cosϕ = 1), 2 A 250 VAC (cosϕ = 0.4), 2 A 24 VDC (8 A/Unit)
Min. Switching Capacity	1 mA 5 VDC
Relays	NY-24W-K-IE (Fujitsu Takamizawa Components, Ltd.), Cannot be replaced.
Service Life of Relay	Electrical: 150,000 operations (24 VDC, resistive load)/ 100,000 operations (250 VAC, cosϕ = 0.4, inductive load) Mechanical: 20,000,000 operations Service life will vary depending on the connected load.
ON Response Time	15 ms max.
OFF Response Time	15 ms max.
Number of Circuits	16 points/common, 1 circuit
Insulation Resistance	20 MΩ between external terminals and the GR terminal (500 VDC)
Dielectric Strength	2,000 VAC between the external terminals and the GR terminal for 1 minute at a leakage current of 10 mA max.
Internal Current Consumption	110 mA 5 VDC max. 96 mA 24 VDC max. (6 mA × No. of ON points)
Weight	170 g max.
Circuit Configuration	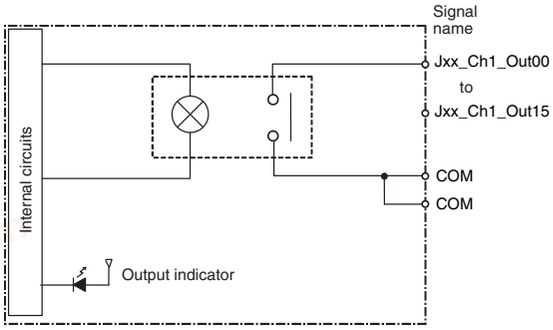 • The signal names of the terminals are the device variable names. The device variable names are the names that use "Jxx" as the device name.
External connection and terminal-device variable diagram	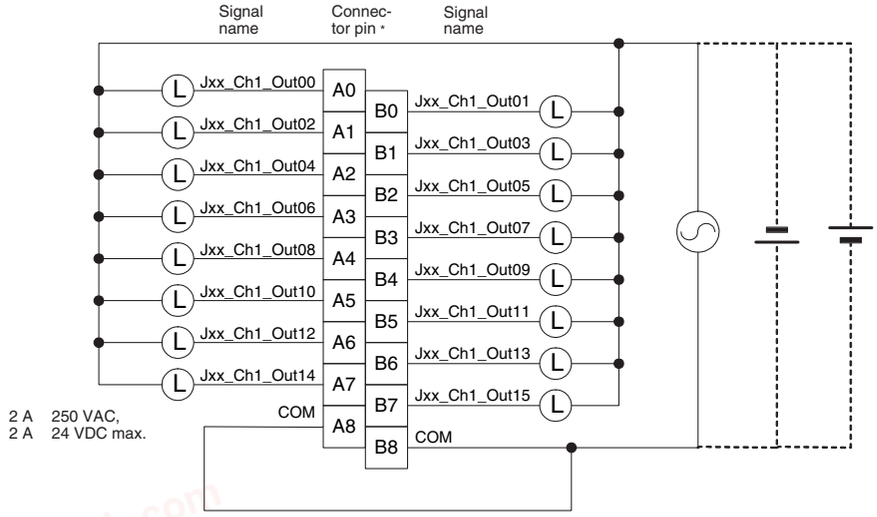 • The signal names of the terminals are the device variable names. The device variable names are the names that use "Jxx" as the device name.

* Terminal numbers A0 to A8 and B0 to B8 are used in the external connection and terminal-device variable diagrams. They are not printed on the Units.

chanhvinh.com

CJ1W-OA201 Triac Output Unit (8 Points)

Name	8-point Triac Output Unit with Terminal Block
Model	CJ1W-OA201
Max. Switching Capacity	0.6 A 250 VAC, 50/60 Hz (2.4 A/Unit)
Max. Inrush Current	15 A (pulse width: 10 ms max.)
Min. Switching Capacity	50 mA 75 VAC
Leakage Current	1.5 mA (200 VAC) max.
Residual Voltage	1.6 VAC max.
ON Response Time	1 ms max.
OFF Response Time	1/2 of load frequency + 1 ms or less.
Number of Circuits	8 (8 points/common, 1 circuit)
Surge Protector	C.R Absorber + Surge Absorber
Fuses	5 A (1/common, 1 used) The fuse cannot be replaced by the user.
Insulation Resistance	20 MΩ between the external terminals and the GR terminal (500 VDC)
Dielectric Strength	2,000 VAC between the external terminals and the GR terminal for 1 minute at a leakage current of 10 mA max.
Internal Current Consumption	220 mA max.
Weight	150 g max.
Circuit Configuration	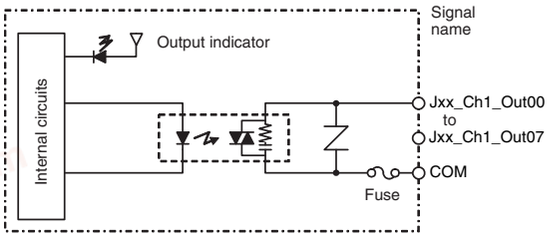 • The signal names of the terminals are the device variable names. The device variable names are the names that use "Jxx" as the device name.
External connection and terminal-device variable diagram	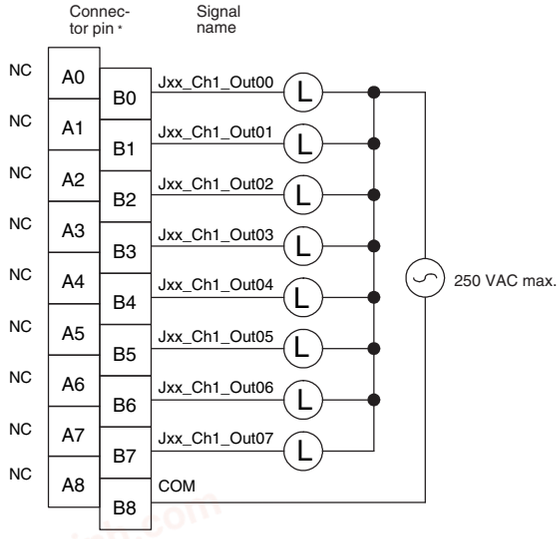 • The signal names of the terminals are the device variable names. The device variable names are the names that use "Jxx" as the device name.

* Terminal numbers A0 to A8 and B0 to B8 are used in the external connection and terminal-device variable diagrams. They are not printed on the Units.

Note: Although 16 I/O bits (1 word) are allocated, only 8 of these can be used for external I/O.

chanhvinh.com

CJ1W-OD201 Transistor Output Unit (8 Points)

Name	8-point Transistor Output Unit with Terminal Block (Sinking Outputs)
Model	CJ1W-OD201
Rated Voltage	12 to 24 VDC
Operating Load Voltage Range	10.2 to 26.4 VDC
Maximum Load Current	2.0 A/point, 8.0 A/Unit
Maximum Inrush Current	10 A/point, 10 ms max.
Leakage Current	0.1 mA max.
Residual Voltage	1.5 V max.
ON Response Time	0.5 ms max.
OFF Response Time	1.0 ms max.
Insulation Resistance	20 MΩ between the external terminals and the GR terminal (100 VDC)
Dielectric Strength	1,000 VAC between the external terminals and the GR terminal for 1 minute at a leakage current of 10 mA max.
Number of Circuits	8 (4 points/common, 2 circuits)
Internal Current Consumption	90 mA max.
Fuse	6.3 A (1/common, 2 used) The fuse cannot be replaced by the user.
External Power Supply	10.2 to 26.4 VDC, 10 mA min.
Weight	110 g max.
Circuit Configuration	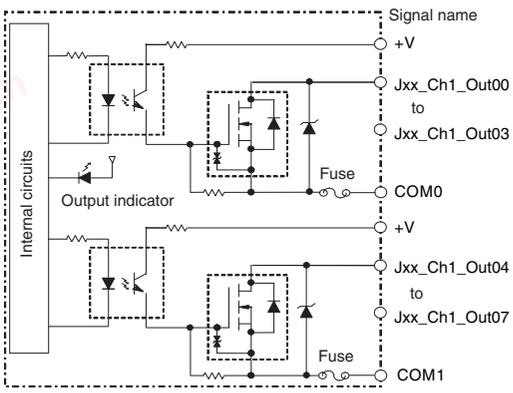 • The signal names of the terminals are the device variable names. The device variable names are the names that use "Jxx" as the device name.
External connection and terminal-device variable diagram	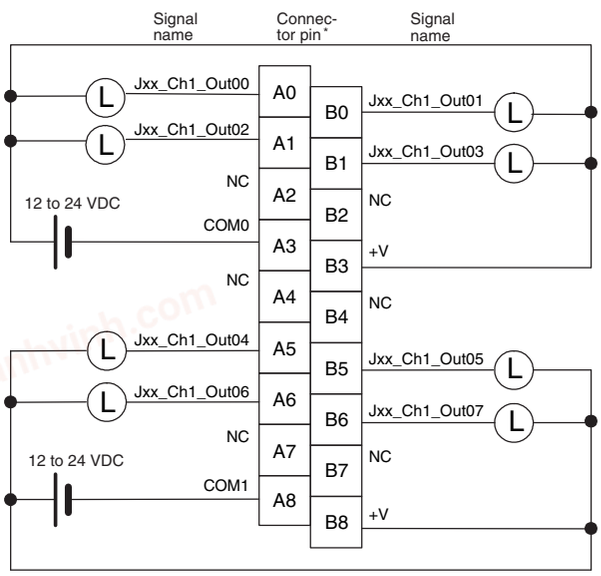 • When wiring, pay careful attention to the polarity of the external power supply. The load may operate incorrectly if the polarity is reversed. • The signal names of the terminals are the device variable names. The device variable names are the names that use "Jxx" as the device name.

* Terminal numbers A0 to A8 and B0 to B8 are used in the external connection and terminal-device variable diagrams. They are not printed on the Units.

Note: Although 16 I/O bits (1 word) are allocated, only 8 of these can be used for external I/O.

chanhvinh.com

CJ1W-OD203 Transistor Output Unit (8 Points)

Name	8-point Transistor Output Unit with Terminal Block (Sinking Outputs)
Model	CJ1W-OD203
Rated Voltage	12 to 24 VDC
Operating Load Voltage Range	10.2 to 26.4 VDC
Maximum Load Current	0.5 A/point, 4.0 A/Unit
Maximum Inrush Current	4.0 A/point, 10 ms max.
Leakage Current	0.1 mA max.
Residual Voltage	1.5 V max.
ON Response Time	0.1 ms max.
OFF Response Time	0.8 ms max.
Insulation Resistance	20 MΩ between the external terminals and the GR terminal (100 VDC)
Dielectric Strength	1,000 VAC between the external terminals and the GR terminal for 1 minute at a leakage current of 10 mA max.
Number of Circuits	8 (8 points/common, 1 circuit)
Internal Current Consumption	100 mA max.
Fuse	None
External Power Supply	10.2 to 26.4 VDC, 20 mA min.
Weight	110 g max.
Circuit Configuration	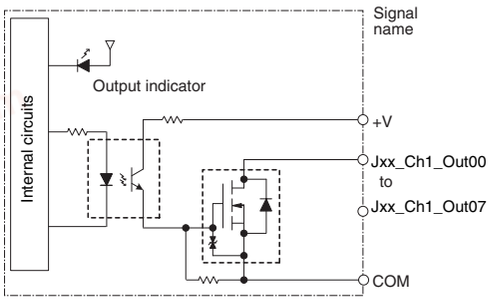 • The signal names of the terminals are the device variable names. The device variable names are the names that use "Jxx" as the device name.
External connection and terminal-device variable diagram	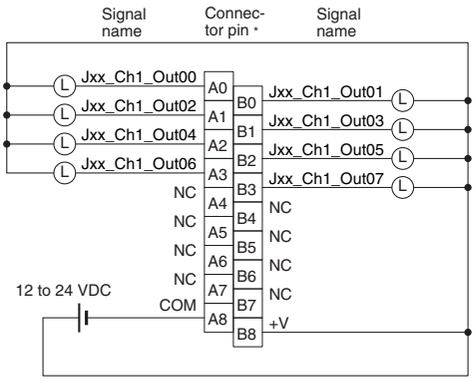 • When wiring, pay careful attention to the polarity of the external power supply. The load may operate incorrectly if the polarity is reversed. • The signal names of the terminals are the device variable names. The device variable names are the names that use "Jxx" as the device name.

* Terminal numbers A0 to A8 and B0 to B8 are used in the external connection and terminal-device variable diagrams. They are not printed on the Units.

Note: Although 16 I/O bits (1 word) are allocated, only 8 of these can be used for external I/O.

chanhvinh.com

CJ1W-OD211 Transistor Output Unit (16 Points)

Name	16-point Transistor Output Unit with Terminal Block (Sinking Outputs)
Model	CJ1W-OD211
Rated Voltage	12 to 24 VDC
Operating Load Voltage Range	10.2 to 26.4 VDC
Maximum Load Current	0.5 A/point, 5.0 A/Unit
Maximum Inrush Current	4.0 A/point, 10 ms max.
Leakage Current	0.1 mA max.
Residual Voltage	1.5 V max.
ON Response Time	0.1 ms max.
OFF Response Time	0.8 ms max.
Insulation Resistance	20 MΩ between the external terminals and the GR terminal (100 VDC)
Dielectric Strength	1,000 VAC between the external terminals and the GR terminal for 1 minute at a leakage current of 10 mA max.
Number of Circuits	16 (16 points/common, 1 circuit)
Internal Current Consumption	5 VDC 100 mA max.
Fuse	None
External Power Supply	10.2 to 26.4 VDC, 20 mA min.
Weight	110 g max.
Circuit Configuration	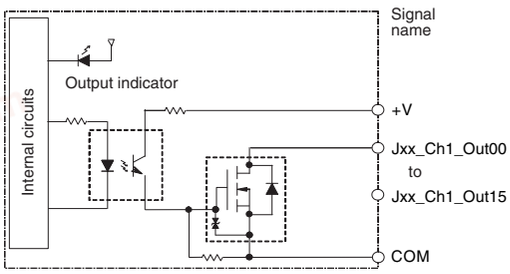 • The signal names of the terminals are the device variable names. The device variable names are the names that use "Jxx" as the device name.
External connection and terminal-device variable diagram	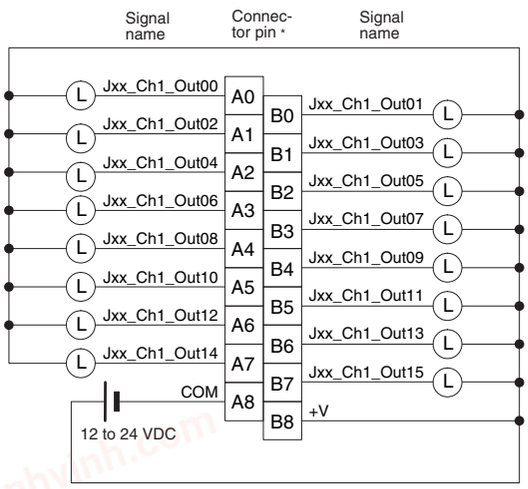 • When wiring, pay careful attention to the polarity of the external power supply. The load may operate incorrectly if the polarity is reversed. • The signal names of the terminals are the device variable names. The device variable names are the names that use "Jxx" as the device name.

* Terminal numbers A0 to A8 and B0 to B8 are used in the external connection and terminal-device variable diagrams. They are not printed on the Units.

chanhvinh.com

CJ1W-OD213 Transistor Output Unit (16 Points)

Name	16-point Transistor Output Unit with Terminal Block (Sinking Outputs)
Model	CJ1W-OD213
Rated Voltage	24 VDC
Operating Load Voltage Range	20.4 to 26.4 VDC
Maximum Load Current	0.5 A/point, 5.0 A/Unit
Maximum Inrush Current	4.0 A/point, 10 ms max.
Leakage Current	0.1 mA max.
Residual Voltage	1.5 V max.
ON Response Time	15 μs max.
OFF Response Time	80 μs max.
Insulation Resistance	20 MΩ between the external terminals and the GR terminal (100 VDC)
Dielectric Strength	1,000 VAC between the external terminals and the GR terminal for 1 minute at a leakage current of 10 mA max.
Number of Circuits	16 (16 points/common, 1 circuit)
Internal Current Consumption	5 VDC 150 mA max.
Fuse	None
External Power Supply	20.4 to 26.4 VDC, 55 mA min.
Weight	110 g max.
Circuit Configuration	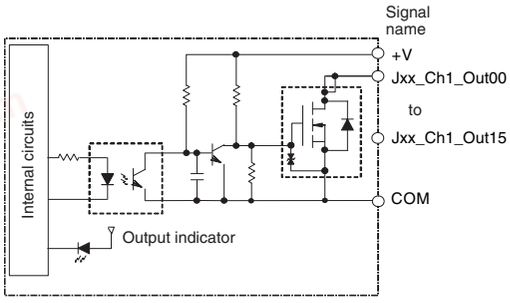 • The signal names of the terminals are the device variable names. The device variable names are the names that use "Jxx" as the device name.
External connection and terminal-device variable diagram	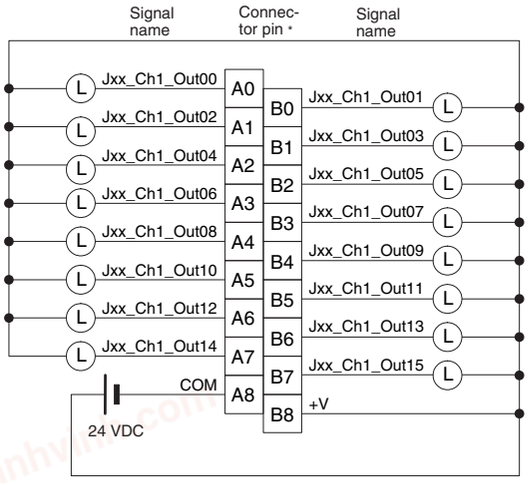 • When wiring, pay careful attention to the polarity of the external power supply. The load may operate incorrectly if the polarity is reversed. • The signal names of the terminals are the device variable names. The device variable names are the names that use "Jxx" as the device name.

* Terminal numbers A0 to A8 and B0 to B8 are used in the external connection and terminal-device variable diagrams. They are not printed on the Units.

chanhvinh.com

CJ1W-OD231 Transistor Output Unit (32 Points)

Name	32-point Transistor Output Unit with Fujitsu / OTAX Connector (Sinking Outputs)
Model	CJ1W-OD231
Rated Voltage	12 to 24 VDC
Operating Load Voltage Range	10.2 to 26.4 VDC
Maximum Load Current	0.5 A/point, 2.0 A/common, 4.0 A/Unit
Maximum Inrush Current	4.0 A/point, 10 ms max.
Leakage Current	0.1 mA max.
Residual Voltage	1.5 V max.
ON Response Time	0.1 ms max.
OFF Response Time	0.8 ms max.
Insulation Resistance	20 MΩ between the external terminals and the GR terminal (100 VDC)
Dielectric Strength	1,000 VAC between the external terminals and the GR terminal for 1 minute at a leakage current of 10 mA max.
Number of Circuits	32 (16 points/common, 2 circuits)
Internal Current Consumption	5 VDC 140 mA max.
Fuse	None
External Power Supply	10.2 to 26.4 VDC, 30 mA min.
Weight	70 g max.
Accessories	None
Circuit Configuration	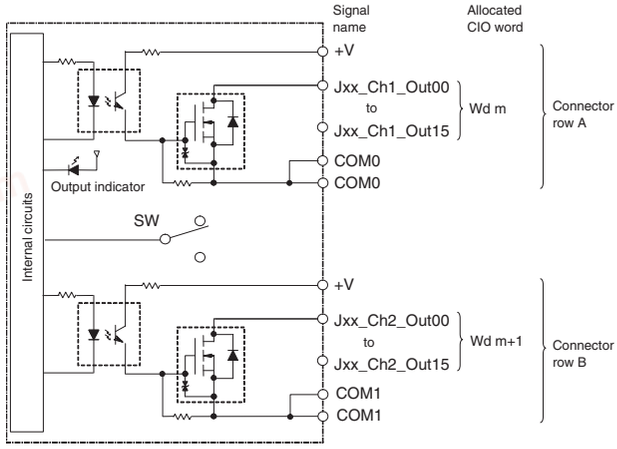 • The signal names of the terminals are the device variable names. The device variable names are the names that use "Jxx" as the device name.
External connection and terminal-device variable diagram	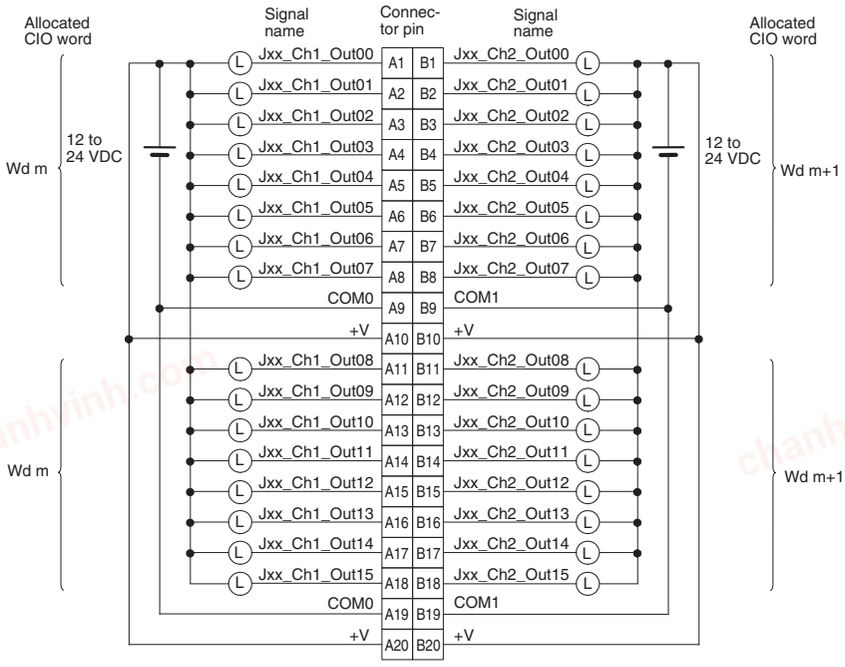 • When wiring, pay careful attention to the polarity of the external power supply. The load may operate incorrectly if the polarity is reversed. • Be sure to wire both terminals A9 and A19 (COM0). • Be sure to wire both terminals B9 and B19 (COM1). • Be sure to wire both terminals A10 and A20 (+V). • Be sure to wire both terminals B10 and B20 (+V). • The signal names of the terminals are the device variable names. The device variable names are the names that use "Jxx" as the device name.

chanhvinh.com

CJ1W-OD233 Transistor Output Unit (32 Points)

Name	32-point Transistor Output Unit with MIL Connector (Sinking Outputs)
Model	CJ1W-OD233
Rated Voltage	12 to 24 VDC
Operating Load Voltage Range	10.2 to 26.4 VDC
Maximum Load Current	0.5 A/point, 2 A/common, 4 A/Unit
Maximum Inrush Current	4.0 A/point, 10 ms max.
Leakage Current	0.1 mA max.
Residual Voltage	1.5 V max.
ON Response Time	0.1 ms max.
OFF Response Time	0.8 ms max.
Insulation Resistance	20 MΩ between the external terminals and the GR terminal (100 VDC)
Dielectric Strength	1,000 VAC between the external terminals and the GR terminal for 1 minute at a leakage current of 10 mA max.
Number of Circuits	32 (16 points/common, 2 circuits)
Internal Current Consumption	140 mA max.
Fuse	None
External Power Supply	10.2 to 26.4 VDC, 30 mA min.
Weight	70 g max.
Circuit Configuration	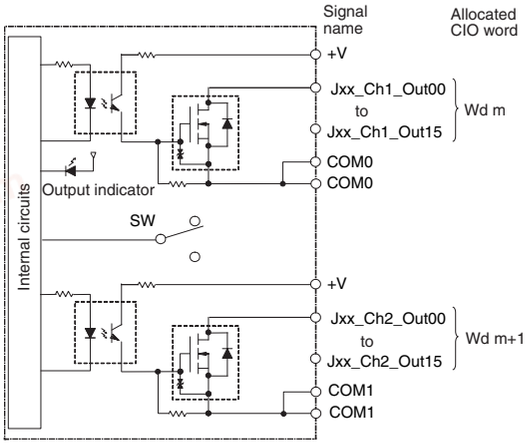 • The signal names of the terminals are the device variable names. The device variable names are the names that use "Jxx" as the device name.
External connection and terminal-device variable diagram	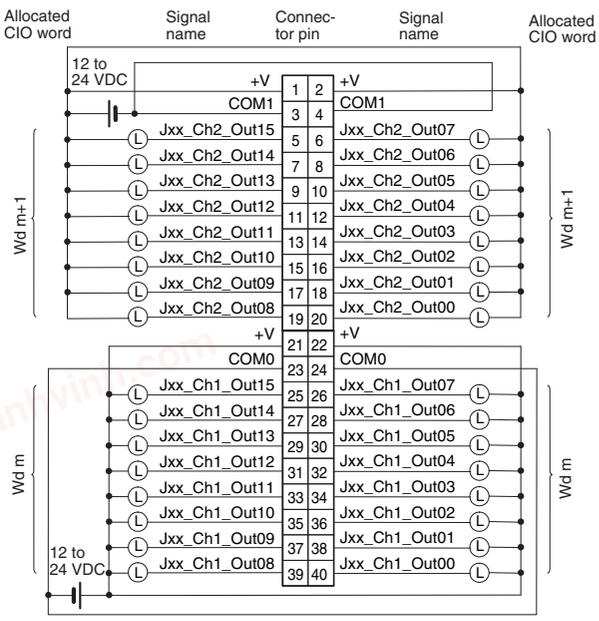 • When wiring, pay careful attention to the polarity of the external power supply. The load may operate incorrectly if the polarity is reversed. • Be sure to wire both terminals 23 and 24 (COM0). • Be sure to wire both terminals 3 and 4 (COM1). • Be sure to wire both terminals 21 and 22 (+V). • Be sure to wire both terminals 1 and 2 (+V). • The signal names of the terminals are the device variable names. The device variable names are the names that use "Jxx" as the device name.

chanhvinh.com

CJ1W-OD234 Transistor Output Unit (32 Points)

Name	32-point Transistor Output Unit with MIL Connector (Sinking Outputs)
Model	CJ1W-OD234
Rated Voltage	24 VDC
Operating Load Voltage Range	20.4 to 26.4 VDC
Maximum Load Current	0.5 A/point, 2 A/common, 4 A/Unit
Maximum Inrush Current	4.0 A/point, 10 ms max.
Leakage Current	0.1 mA max.
Residual Voltage	1.5 V max.
ON Response Time	15 μs max.
OFF Response Time	80 μs max.
Insulation Resistance	20 MΩ between the external terminals and the GR terminal (100 VDC)
Dielectric Strength	1,000 VAC between the external terminals and the GR terminal for 1 minute at a leakage current of 10 mA max.
Number of Circuits	32 (16 points/common, 2 circuits)
Internal Current Consumption	220 mA max.
Fuse	None
External Power Supply	20.4 to 26.4 VDC, 110 mA min.
Weight	70 g max.
Circuit Configuration	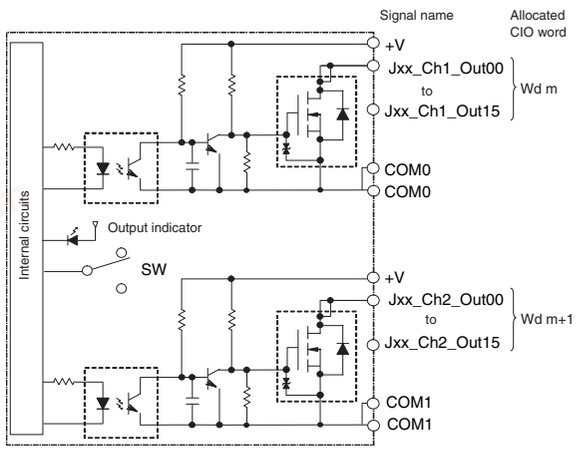 • The signal names of the terminals are the device variable names. The device variable names are the names that use "Jxx" as the device name.
External connection and terminal-device variable diagram	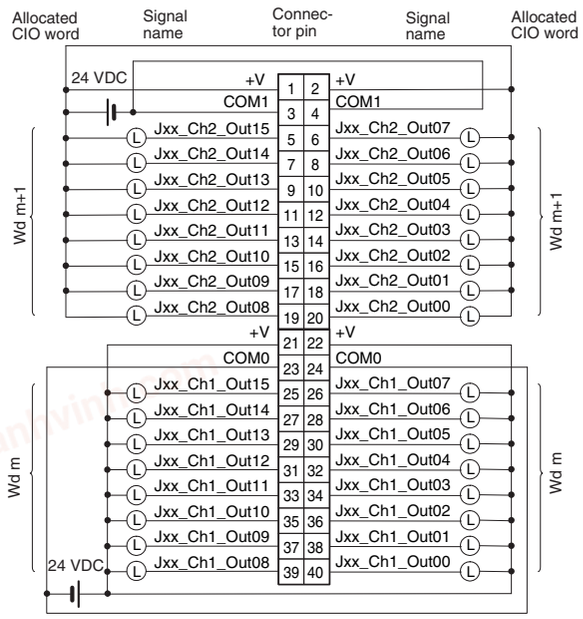 • When wiring, pay careful attention to the polarity of the external power supply. The load may operate incorrectly if the polarity is reversed. • Be sure to wire both terminals 23 and 24 (COM0). • Be sure to wire both terminals 3 and 4 (COM1). • Be sure to wire both terminals 21 and 22 (+V). • Be sure to wire both terminals 1 and 2 (+V). • The signal names of the terminals are the device variable names. The device variable names are the names that use "Jxx" as the device name.

chanhvinh.com

CJ1W-OD261 Transistor Output Unit (64 Points)

Name	64-point Transistor Output Unit with Fujitsu / OTAX Connectors (Sinking Outputs)
Model	CJ1W-OD261
Rated Voltage	12 to 24 VDC
Operating Load Voltage Range	10.2 to 26.4 VDC
Maximum Load Current	0.3 A/point, 1.6 A/common, 6.4 A/Unit
Maximum Inrush Current	3.0 A/point, 10 ms max.
Leakage Current	0.1 mA max.
Residual Voltage	1.5 V max.
ON Response Time	0.5 ms max.
OFF Response Time	1.0 ms max.
Insulation Resistance	20 MΩ between the external terminals and the GR terminal (100 VDC)
Dielectric Strength	1,000 VAC between the external terminals and the GR terminal for 1 minute at a leakage current of 10 mA max.
Number of Circuits	64 (16 points/common, 4 circuits)
Internal Current Consumption	5 VDC, 170 mA max.
Fuse	None
External Power Supply	10.2 to 26.4 VDC, 50 mA min.
Weight	110 g max.
Accessories	None
Circuit Configuration	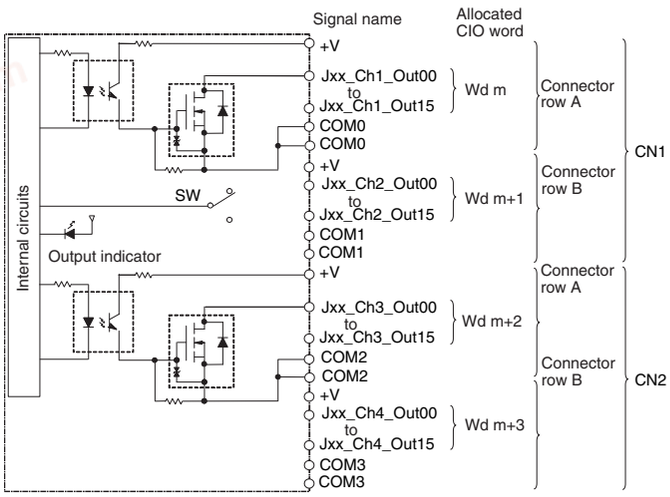 • The signal names of the terminals are the device variable names. The device variable names are the names that use "Jxx" as the device name.

chanhvinh.com

External connection and terminal-device variable diagram

CN1

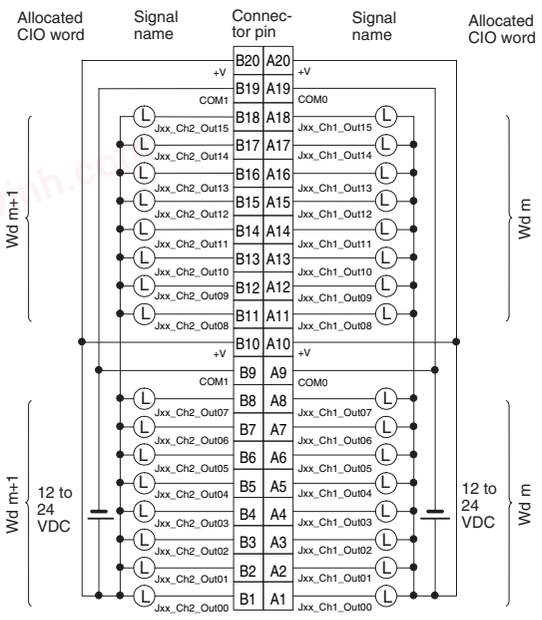

- When wiring, pay careful attention to the polarity of the external power supply. The load may operate incorrectly if the polarity is reversed.
- Be sure to wire both terminals A9 and A19 (COM0) of CN1.
- Be sure to wire both terminals B9 and B19 (COM1) of CN1.
- Be sure to wire both terminals A10 and A20 (+V) of CN1.
- Be sure to wire both terminals B10 and B20 (+V) of CN1.
- The signal names of the terminals are the device variable names.The device variable names are the names that use "Jxx" as the device name.

CN2

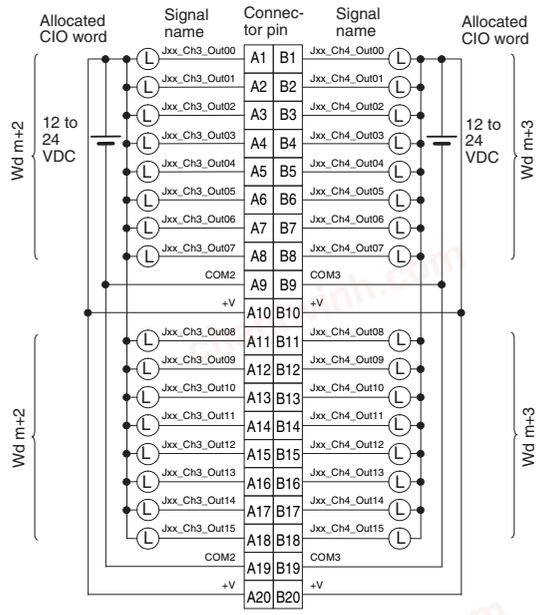

- When wiring, pay careful attention to the polarity of the external power supply. The load may operate incorrectly if the polarity is reversed.
- Be sure to wire both terminals A9 and A19 (COM2) of CN2.
- Be sure to wire both terminals B9 and B19 (COM3) of CN2.
- Be sure to wire both terminals A10 and A20 (+V) of CN2.
- Be sure to wire both terminals B10 and B20 (+V) of CN2.
- The signal names of the terminals are the device variable names.The device variable names are the names that use "Jxx" as the device name.

chanhvinh.com

CJ1W-OD263 Transistor Output Unit (64 Points)

Name	64-point Transistor Output Unit with MIL Connectors (Sinking Outputs)
Model	CJ1W-OD263
Rated Voltage	12 to 24 VDC
Operating Load Voltage Range	10.2 to 26.4 VDC
Maximum Load Current	0.3 A/point, 1.6 A/common, 6.4 A/Unit
Maximum Inrush Current	3.0 A/point, 10 ms max.
Leakage Current	0.1 mA max.
Residual Voltage	1.5 V max.
ON Response Time	0.5 ms max.
OFF Response Time	1.0 ms max.
Insulation Resistance	20 MΩ between the external terminals and the GR terminal (100 VDC)
Dielectric Strength	1,000 VAC between the external terminals and the GR terminal for 1 minute at a leakage current of 10 mA max.
Number of Circuits	64 (16 points/common, 4 circuits)
Internal Current Consumption	170 mA max.
Fuse	None
External Power Supply	10.2 to 26.4 VDC, 50 mA min.
Weight	110 g max.
Circuit Configuration	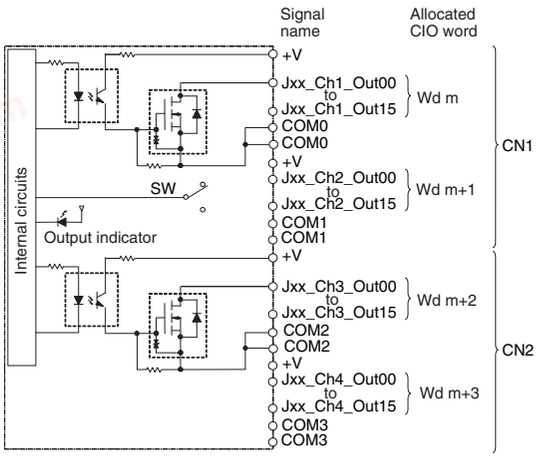 • The signal names of the terminals are the device variable names. The device variable names are the names that use "Jxx" as the device name.

chanhvinh.com

	CN1	CN2
External connection and terminal-device variable diagram	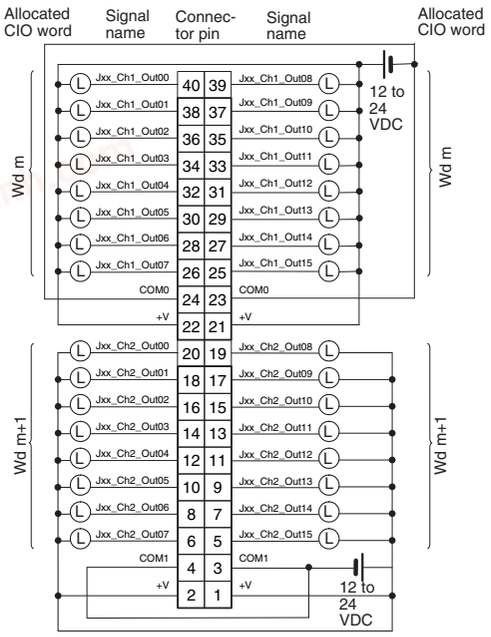	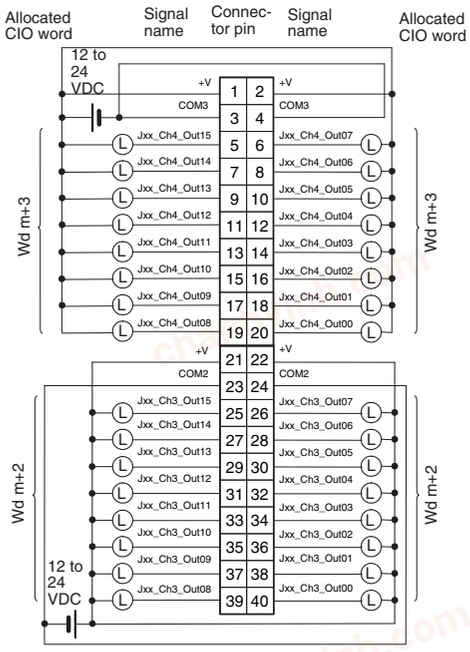
	• When wiring, pay careful attention to the polarity of the external power supply. The load may operate incorrectly if the polarity is reversed. • Be sure to wire both terminals 23 and 24 (COM0) of CN1. • Be sure to wire both terminals 3 and 4 (COM1) of CN1. • Be sure to wire both terminals 21 and 22 (+V) of CN1. • Be sure to wire both terminals 1 and 2 (+V) of CN1. • The signal names of the terminals are the device variable names.The device variable names are the names that use "Jxx" as the device name.	• When wiring, pay careful attention to the polarity of the external power supply. The load may operate incorrectly if the polarity is reversed. • Be sure to wire both terminals 23 and 24 (COM2) of CN2. • Be sure to wire both terminals 3 and 4 (COM3) of CN2. • Be sure to wire both terminals 21 and 22 (+V) of CN2. • Be sure to wire both terminals 1 and 2 (+V) of CN2. • The signal names of the terminals are the device variable names.The device variable names are the names that use "Jxx" as the device name.

chanhvinh.com

CJ1W-OD202 Transistor Output Unit (8 Points)

Name	8-point Transistor Output Unit with Terminal Block (Sourcing Outputs)
Model	CJ1W-OD202
Rated Voltage	24 VDC
Operating Load Voltage Range	20.4 to 26.4 VDC
Maximum Load Current	2 A/point, 8 A/Unit
Leakage Current	0.1 mA max.
Residual Voltage	1.5 V max.
ON Response Time	0.5 ms max.
OFF Response Time	1.0 ms max.
Load Short-circuit Protection	Detection current: 6 A min. Automatic restart after error clearance.
Line Disconnection Detection	Detection current: 200 mA
Insulation Resistance	20 MΩ between the external terminals and the GR terminal (100 VDC)
Dielectric Strength	1,000 VAC between the external terminals and the GR terminal for 1 minute at a leakage current of 10 mA max.
Number of Circuits	8 (4 points/common, 2 circuits)
Internal Current Consumption	110 mA max.
Fuse	None
External Power Supply	20.4 to 26.4 VDC, 50 mA min.
Weight	120 g max.
Circuit Configuration	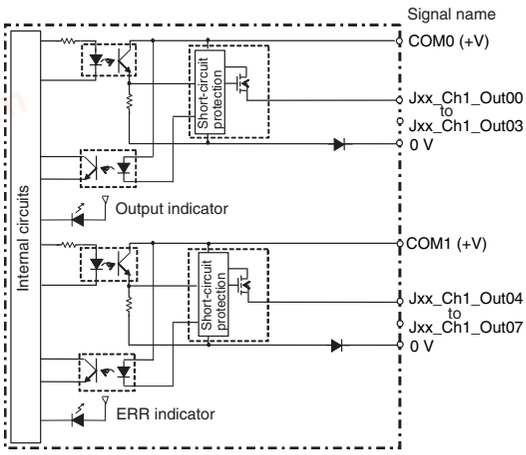 • When overcurrent or line disconnection is detected, the ERR indicator will light, and the corresponding bit (two points per bit) in the Basic I/O Unit Information Area (A050 to A069) will change to TRUE. • The signal names of the terminals are the device variable names. The device variable names are the names that use "Jxx" as the device name.
External connection and terminal-device variable diagram	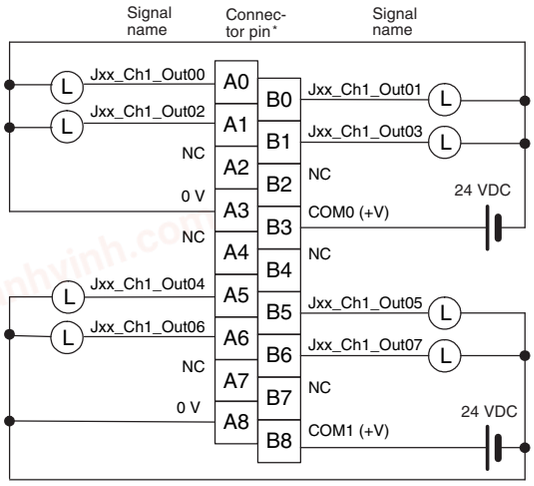 • When wiring, pay careful attention to the polarity of the external power supply. The load may operate incorrectly if the polarity is reversed. • The signal names of the terminals are the device variable names. The device variable names are the names that use "Jxx" as the device name.

* Terminal numbers A0 to A8 and B0 to B8 are used in the external connection and terminal-device variable diagrams. They are not printed on the Units.

Note: Although 16 I/O bits (1 word) are allocated, only 8 of these can be used for external I/O.

chanhvinh.com

CJ1W-OD204 Transistor Output Unit (8 Points)

Name	8-point Transistor Output Unit with Terminal Block (Sourcing Outputs)
Model	CJ1W-OD204
Rated Voltage	24 VDC
Operating Load Voltage Range	20.4 to 26.4 VDC
Maximum Load Current	0.5 A/point, 4.0 A/Unit
Leakage Current	0.1 mA max.
Residual Voltage	1.5 V max.
ON Response Time	0.5 ms max.
OFF Response Time	1.0 ms max.
Load Short-circuit Protection	Detection current: 0.7 to 2.5 A Automatic restart after error clearance.
Insulation Resistance	20 MΩ between the external terminals and the GR terminal (100 VDC)
Dielectric Strength	1,000 VAC between the external terminals and the GR terminal for 1 minute at a leakage current of 10 mA max.
Number of Circuits	8 (8 points/common, 1 circuit)
Internal Current Consumption	5 VDC, 100 mA max.
Fuse	None
External Power Supply	20.4 to 26.4 VDC, 40 mA min.
Weight	120 g max.
Circuit Configuration	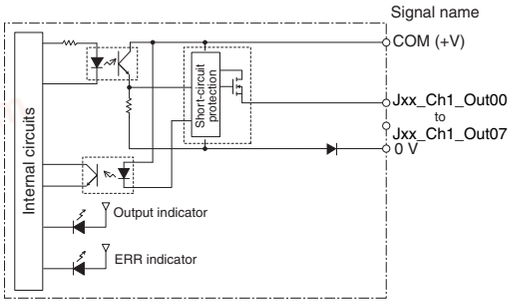 • When overcurrent is detected, the ERR indicator will light, and the corresponding bit in the Basic I/O Unit Information Area (A050 to A069) will change to TRUE. • The signal names of the terminals are the device variable names. The device variable names are the names that use "Jxx" as the device name.
External connection and terminal-device variable diagram	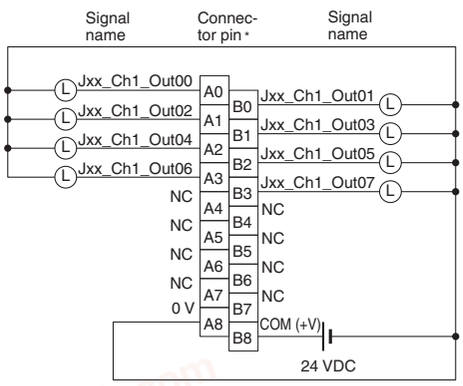 • When wiring, pay careful attention to the polarity of the external power supply. The load may operate incorrectly if the polarity is reversed. • The signal names of the terminals are the device variable names. The device variable names are the names that use "Jxx" as the device name.

* Terminal numbers A0 to A8 and B0 to B8 are used in the external connection and terminal-device variable diagrams. They are not printed on the Units.

Note: Although 16 I/O bits (1 word) are allocated, only 8 of these can be used for external I/O.

chanhvinh.com

CJ1W-OD212 Transistor Output Unit (16 Points)

Name	16-point Transistor Output Unit with Terminal Block (Sourcing Outputs)
Model	CJ1W-OD212
Rated Voltage	24 VDC
Operating Load Voltage Range	20.4 to 26.4 VDC
Maximum Load Current	0.5 A/point, 5.0 A/Unit
Maximum Inrush Current	0.1 mA max.
Leakage Current	1.5 V max.
ON Response Time	0.5 ms max.
OFF Response Time	1.0 ms max.
Load Short-circuit Protection	Detection current: 0.7 to 2.5 A Automatic restart after error clearance.
Insulation Resistance	20 MΩ between the external terminals and the GR terminal (100 VDC)
Dielectric Strength	1,000 VAC between the external terminals and the GR terminal for 1 minute at a leakage current of 10 mA max.
Number of Circuits	16 (16 points/common, 1 circuit)
Internal Current Consumption	5 VDC, 100 mA max.
External Power Supply	20.4 to 26.4 VDC, 40 mA min.
Weight	120 g max.
Circuit Configuration	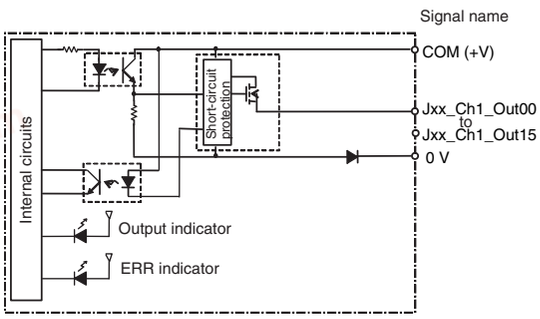 • When overcurrent is detected, the ERR indicator will light, and the corresponding bit in the Basic I/O Unit Information Area (A050 to A069) will change to TRUE. • The signal names of the terminals are the device variable names. The device variable names are the names that use "Jxx" as the device name.
External connection and terminal-device variable diagram	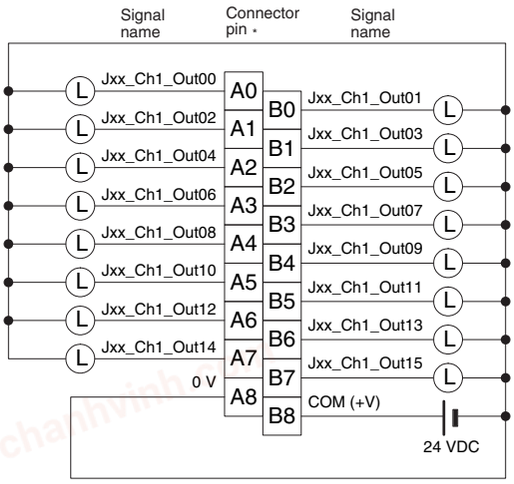 • When wiring, pay careful attention to the polarity of the external power supply. The load may operate incorrectly if the polarity is reversed. • The signal names of the terminals are the device variable names. The device variable names are the names that use "Jxx" as the device name.

* Terminal numbers A0 to A8 and B0 to B8 are used in the external connection and terminal-device variable diagrams. They are not printed on the Units.

chanhvinh.com

CJ1W-OD232 Transistor Output Unit (32 Points)

Name	32-point Transistor Output Unit with MIL Connector (Sourcing Outputs)
Model	CJ1W-OD232
Rated Voltage	24 VDC
Operating Load Voltage Range	20.4 to 26.4 VDC
Maximum Load Current	0.5 A/point, 2.0 A/common, 4.0 A/Unit
Leakage Current	0.1 mA max.
Residual Voltage	1.5 V max.
ON Response Time	0.5 ms max.
OFF Response Time	1.0 ms max.
Load Short-circuit Protection	Detection current: 0.7 to 2.5 A Automatic restart after error clearance.
Insulation Resistance	20 MΩ between the external terminals and the GR terminal (100 VDC)
Dielectric Strength	1,000 VAC between the external terminals and the GR terminal for 1 minute at a leakage current of 10 mA max.
Number of Circuits	32 (16 points/common, 2 circuits)
Internal Current Consumption	5 VDC 150 mA max.
External Power Supply	20.4 to 26.4 VDC, 70 mA min.
Weight	80 g max.
Accessories	None
Circuit Configuration	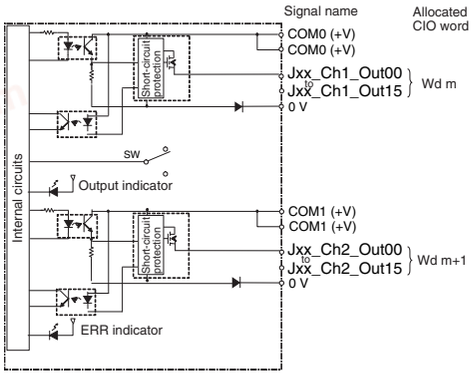 • When overcurrent is detected, the ERR indicator will light, and the corresponding bit (bit allocated for each common) in the Basic I/O Unit Information Area (A050 to A069) will change to TRUE. • The signal names of the terminals are the device variable names. The device variable names are the names that use "Jxx" as the device name.

chanhvinh.com

External connection and terminal-device variable diagram

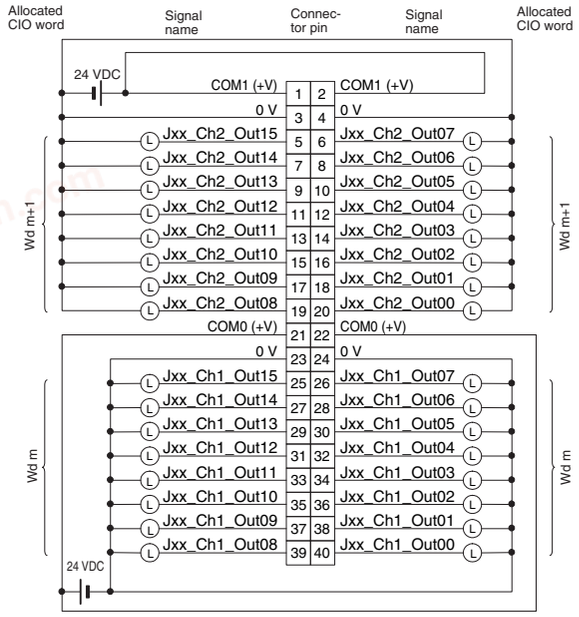

- When wiring, pay careful attention to the polarity of the external power supply. The load may operate incorrectly if the polarity is reversed.
- Be sure to wire both terminals 21 and 22 (COM0 (+V)).
- Be sure to wire both terminals 1 and 2 (COM1 (+V)).
- Be sure to wire both terminals 3 and 4 (0 V).
- Be sure to wire both terminals 23 and 24 (0 V).
- The signal names of the terminals are the device variable names.
  The device variable names are the names that use "Jxx" as the device name.

chanhvinh.com

CJ1W-OD262 Transistor Output Unit (64 Points)

Name	64-point Transistor Output Unit with MIL Connectors (Sourcing Outputs)
Model	CJ1W-OD262
Rated Voltage	12 to 24 VDC
Operating Load Voltage Range	10.2 to 26.4 VDC
Maximum Load Current	0.3 A/point, 1.6 A/common, 6.4 A/Unit
Maximum Inrush Current	3.0 A/point, 10 ms max.
Leakage Current	0.1 mA max.
Residual Voltage	1.5 V max.
ON Response Time	0.5 ms max.
OFF Response Time	1.0 ms max.
Insulation Resistance	20 MΩ between the external terminals and the GR terminal (100 VDC)
Dielectric Strength	1,000 VAC between the external terminals and the GR terminal for 1 minute at a leakage current of 10 mA max.
Number of Circuits	64 (16 points/common, 4 circuits)
Internal Current Consumption	170 mA max. (5 VDC)
Fuse	None
External Power Supply	10.2 to 26.4 VDC, 50 mA min.
Weight	110 g max.
Accessories	None
Circuit Configuration	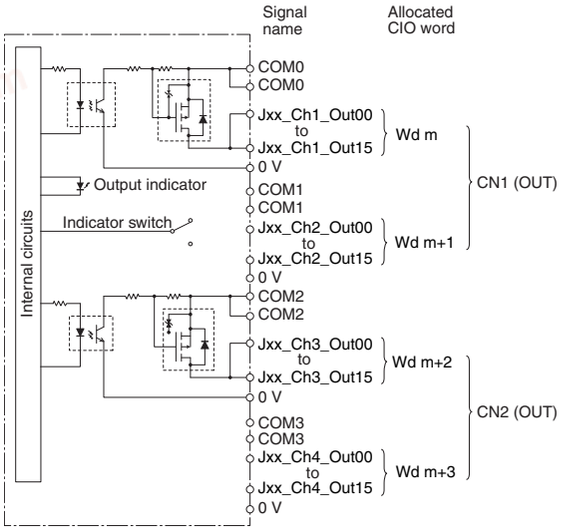 • The signal names of the terminals are the device variable names. The device variable names are the names that use "Jxx" as the device name.

chanhvinh.com

	CN1	CN2
External connection and terminal-device variable diagram	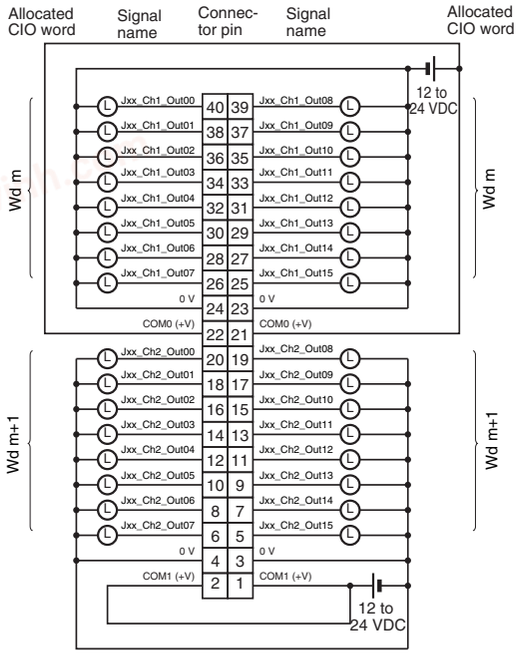	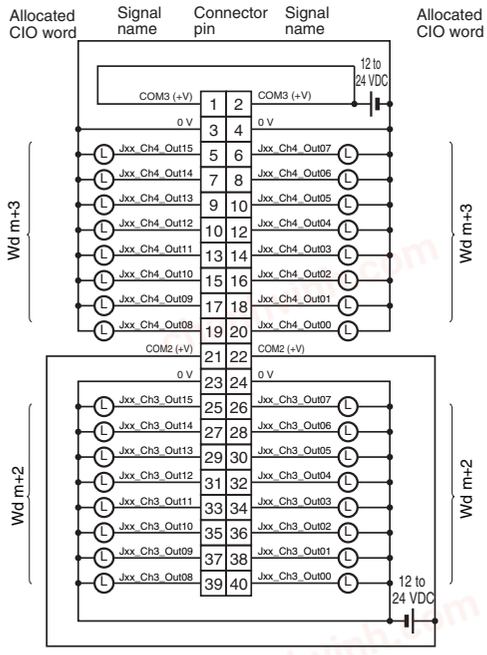
	• When wiring, pay careful attention to the polarity of the external power supply. The load may operate incorrectly if the polarity is reversed. • Be sure to wire both terminals 21 and 22 (COM0 (+V)) of CN1. • Be sure to wire both terminals 1 and 2 (COM1 (+V)) of CN1. • Be sure to wire both terminals 23 and 24 (0 V) of CN1. • Be sure to wire both terminals 3 and 4 (0 V) of CN1. • The signal names of the terminals are the device variable names.The device variable names are the names that use "Jxx" as the device name.	• When wiring, pay careful attention to the polarity of the external power supply. The load may operate incorrectly if the polarity is reversed. • Be sure to wire both terminals 21 and 22 (COM2 (+V)) of CN2. • Be sure to wire both terminals 1 and 2 (COM3 (+V)) of CN2. • Be sure to wire both terminals 23 and 24 (0 V) of CN2. • Be sure to wire both terminals 3 and 4 (0 V) of CN2. • The signal names of the terminals are the device variable names.The device variable names are the names that use "Jxx" as the device name.

chanhvinh.com

Bit Allocations for Output Unit

8-point Output Unit

Allocated CIO word		Signal name (CJ/NJ)
CIO	Bit	
Wd m (Output)	00	OUT0/Jxx_Ch1_Out00
	01	OUT1/Jxx_Ch1_Out01
	:	:
	06	OUT6/Jxx_Ch1_Out06
	07	OUT7/Jxx_Ch1_Out07
	08	–
	09	–
	:	:
	14	–
	15	–

16-point Output Unit

Allocated CIO word		Signal name (CJ/NJ)
CIO	Bit	
Wd m (Output)	00	OUT0/Jxx_Ch1_Out00
	01	OUT1/Jxx_Ch1_Out01
	:	:
	14	OUT14/Jxx_Ch1_Out14
	15	OUT15/Jxx_Ch1_Out15

32-point Output Unit

Allocated CIO word		Signal name (CJ/NJ)
CIO	Bit	
Wd m (Output)	00	OUT0/Jxx_Ch1_Out00
	01	OUT1/Jxx_Ch1_Out01
	:	:
	14	OUT14/Jxx_Ch1_Out14
	15	OUT15/Jxx_Ch1_Out15
Wd m+1 (Output)	00	OUT0/Jxx_Ch2_Out00
	01	OUT1/Jxx_Ch2_Out01
	:	:
	14	OUT14/Jxx_Ch2_Out14
	15	OUT15/Jxx_Ch2_Out15

64-point Output Unit

Allocated CIO word		Signal name (CJ/NJ)
CIO	Bit	
Wd m (Output)	00	OUT0/Jxx_Ch1_Out00
	01	OUT1/Jxx_Ch1_Out01
	:	:
	14	OUT14/Jxx_Ch1_Out14
	15	OUT15/Jxx_Ch1_Out15
Wd m+1 (Output)	00	OUT0/Jxx_Ch2_Out00
	01	OUT1/Jxx_Ch2_Out01
	:	:
	14	OUT14/Jxx_Ch2_Out14
	15	OUT15/Jxx_Ch2_Out15
Wd m+2 (Output)	00	OUT0/Jxx_Ch3_Out00
	01	OUT1/Jxx_Ch3_Out01
	:	:
	14	OUT14/Jxx_Ch3_Out14
	15	OUT15/Jxx_Ch3_Out15
Wd m+3 (Output)	00	OUT0/Jxx_Ch4_Out00
	01	OUT1/Jxx_Ch4_Out01
	:	:
	14	OUT14/Jxx_Ch4_Out14
	15	OUT15/Jxx_Ch4_Out15

chanhvinh.com

External Interface

8-point/16-point Units (18-point Terminal Blocks)

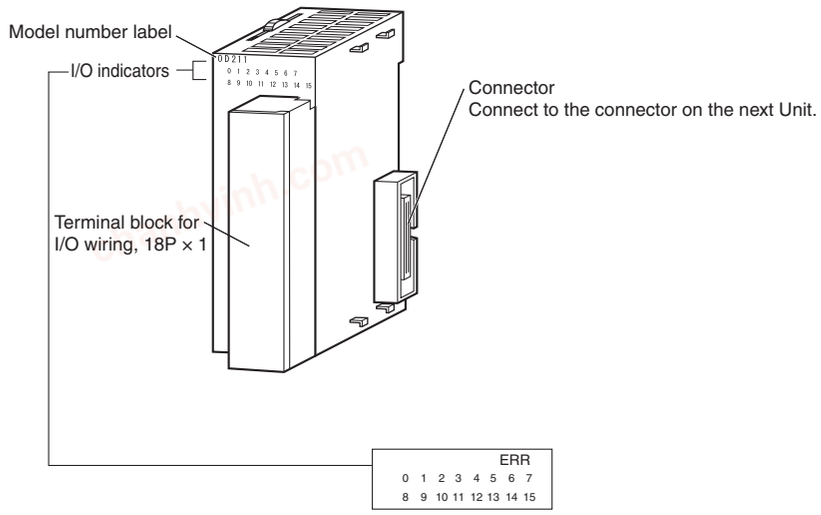

Note: The CJ1W-OD202, CJ1W-OD204, and CJ1W-OD212 also have an ERR indicator for the load short-circuit alarm.

32-point Units (Models with 40-point Fujitsu / OTAX Connector or MIL Connector)

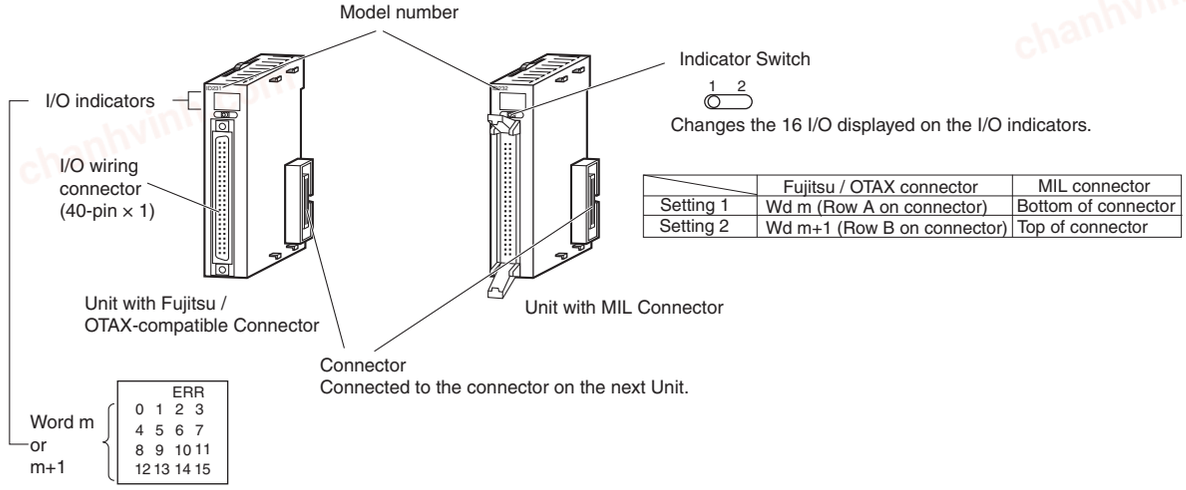

	Fujitsu / OTAX connector	MIL connector
Setting 1	Wd m (Row A on connector)	Bottom of connector
Setting 2	Wd m+1 (Row B on connector)	Top of connector

Note: Only the CJ1W-OD232 has an ERR indicator for the load short-circuit alarm.

chanhvinh.com

64-point Units (Models with Two 40-point Fujitsu / OTAX Connectors or MIL Connector)

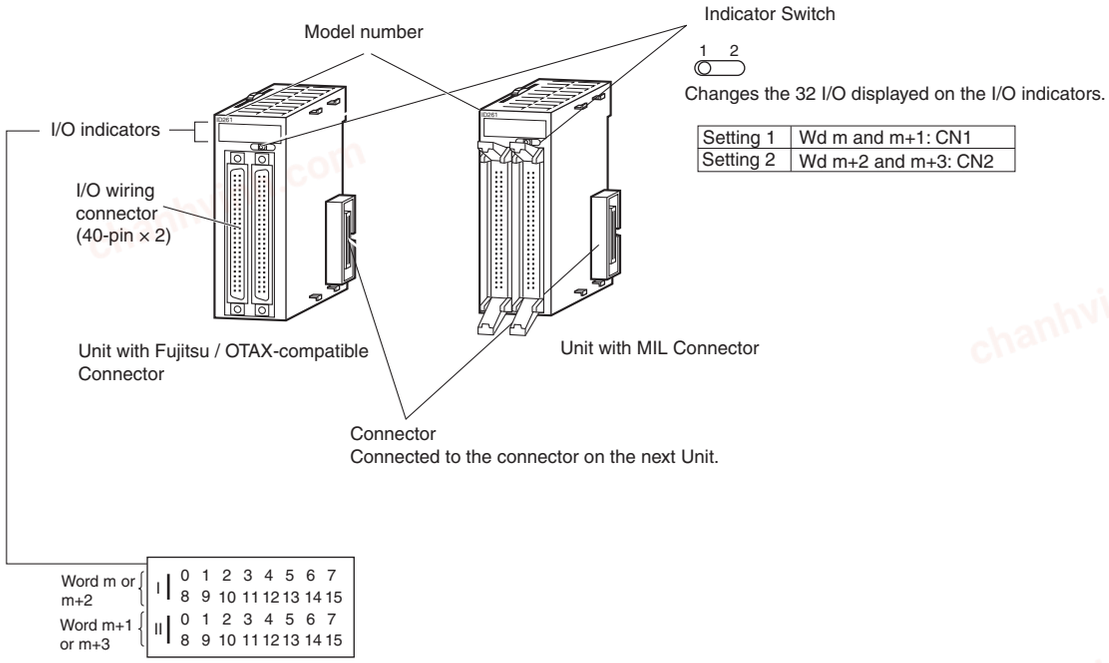

Wiring Basic I/O Units with Terminal Blocks

Electric Wires

The following wire gauges are recommended.

Terminal Block Connector	Wire Size
18-terminal	AWG 22 to 18 (0.32 to 0.82 mm^2)

Crimp terminals

Use crimp terminals (M3) having the dimensions shown below.



chanhvinh.com

I/O Unit Wiring Methods

An I/O Unit can be connected to an external device by any of the following three methods.

1. User-provided Cable
An I/O Unit can be directly connected to an external device by using a connector.

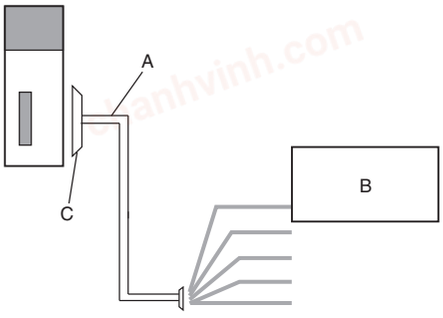

A	User-provided cable
B	External device
C	Connector

2. Connector-Terminal Block Conversion Unit
Use a Connecting Cable to connect to a Connector-Terminal Block Conversion Unit.
Converting the I/O Unit connector to a screw terminal block or push-in terminal block makes it easy to connect external devices.

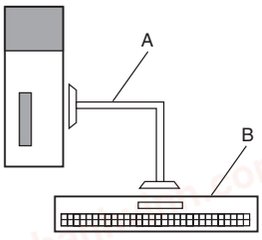

A	Connecting Cable for Connector-Terminal Block Conversion Unit XW2Z
B	Connector-Terminal Block Conversion Unit XW2□

3. I/O Relay Terminal
Use a Connecting Cable to connect to an I/O Relay Terminal.
The I/O specifications can be converted to relay outputs and AC inputs by connecting the I/O Relay Terminal to an I/O Unit.

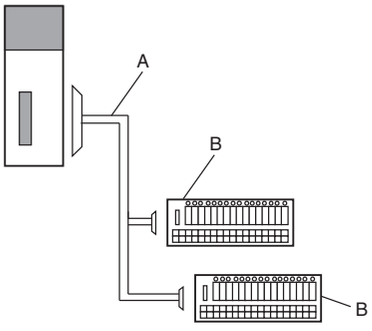

A	Connecting Cable for I/O Relay Terminals XW2Z-R
B	I/O Relay Terminals G70V, G7TC Relay Terminals G70D I/O Terminal Socket G70A Or, conversion to relay outputs and AC inputs.

chanhvinh.com

1. Using User-made Cables with Connector

Available Connectors

Use the following connectors when assembling a connector and cable.

32- and 64-point Basic I/O Units with Fujitsu / OTAX-compatible Connectors

Applicable Units

Model	Specifications	Pins
CJ1W-OD231	Transistor Output Unit with Sinking Outputs, 32 outputs	40
CJ1W-OD261	Transistor Output Unit with Sinking Outputs, 64 outputs	

Applicable Cable-side Connectors

Connection	Pins	OMRON set	Fujitsu / OTAX parts
Solder-type	40	C500-CE404	Socket: Fujitsu FCN-361J040-AU Connector cover: Fujitsu FCN-360C040-J2 OTAX N360C040J2
Crimped	40	C500-CE405	Socket: Fujitsu FCN-363J040 OTAX N363J040 Connector cover: Fujitsu FCN-360C040-J2 OTAX N360C040J2 Contacts: Fujitsu FCN-363J-AU OTAX N363JAU
Pressure-welded	40	C500-CE403	Fujitsu FCN-367J040-AU/F

32- and 64-point Basic I/O Units with MIL Connectors

Applicable Units

Model	Specifications	Pins
CJ1W-OD232	Transistor Output Unit with sourcing outputs, 32 outputs	40
CJ1W-OD262	Transistor Output Unit with sourcing outputs, 64 outputs	
CJ1W-OD233 CJ1W-OD234	Transistor Output Unit with sinking outputs, 32 outputs	
CJ1W-OD263	Transistor Output Unit with sinking outputs, 64 outputs	

Applicable Cable-side Connectors

Connection	Pins	OMRON set	DDK parts
Pressure-welded	40	XG4M-4030-T *1	FRC5-A040-3T0S
Crimped	40	XG5N-401 *2	HU-40OS2-001
	–	Crimp Contacts for XG5N *3 XG5W-0232 (loose contacts: 100 pieces) XG5W-0232-R (reel contacts: 10,000 pieces)	HU-111S

*1. Socket and Stain Relief set.
*2. Crimp Contacts (XG5W-0232) are sold separately.
*3. Applicable wire size is AWG 28 to 24. For applicable conductor construction and more information, visit the OMRON website at www.ia.omron.com.

Wire Size

We recommend using cable with wire gauges of AWG 28 to 24 (0.08 to 0.2 mm^2). Use cable with external wire diameters of 1.61 mm max.

Crimping Tools

The following models are recommended for crimping tools and pressure-welding tools for Fujitsu / OTAX connectors.

Tools for Crimped Connectors (Fujitsu Component)

Product Name	Model
Hand Crimping Tool	FCN-363T-T005/H
Contact Withdrawal Tool	FCN-360T-T001/H

Tools for Pressure-welded Connectors (Fujitsu Component)

Product Name	Model
Hand Press	FCN-707T-T101/H
Cable Cutter	FCN-707T-T001/H
Locator Plate	FCN-367T-T012/H

The following models are recommended for tools for OMRON MIL connectors.

Tools for Pressure-welded Connectors (OMRON)

Product Name	Model
Pressure-welding Tool	XY2B-0002
Attachment	XY2B-1007

Tools for Crimped Connectors (OMRON)

Product Name	Model
Manual Crimping Tool	XY2B-7007

chanhvinh.com

2. Connecting Connector-Terminal Block Conversion Units

Connection Patterns for Connector-Terminal Block Conversion Units

Pattern	Configuration
A	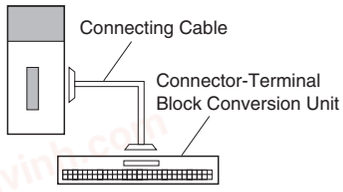
B	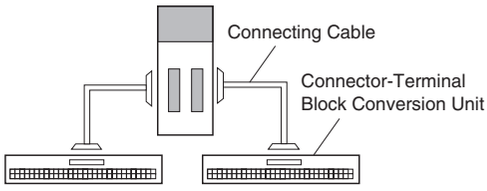

Combination of I/O Units with Connector-Terminal Block Conversion Units

Unit	I/O capacity	Number of connectors	Polarity	Connection pattern	Connecting Cable *	Connector-Terminal Block Conversion Unit	Wiring method	Common terminals
CJ1W-OD231	32 outputs	1 Fujitsu / OTAX connector	NPN	A	XW2Z-□□□B	XW2K-40G-O32B	Push-In Plus	No
						XW2K-40G-O32B-OUT	Push-In Plus	Yes
						XW2R-J34GD-C3	Phillips screw	No
						XW2R-E34GD-C3	Slotted screw (rise up)	No
CJ1W-OD232	32 outputs	1 MIL connector	PNP	A	XW2Z-□□□K	XW2K-40G-O32C	Push-In Plus	No
						XW2K-40G-O32C-OUT	Push-In Plus	Yes
						XW2R-J34GD-C4	Phillips screw	No
						XW2R-E34GD-C4	Slotted screw (rise up)	No
CJ1W-OD233	32 outputs	1 MIL connector	NPN	A	XW2Z-□□□K	XW2K-40G-O32C	Push-In Plus	No
						XW2K-40G-O32C-OUT	Push-In Plus	Yes
						XW2R-J34GD-C4	Phillips screw	No
						XW2R-E34GD-C4	Slotted screw (rise up)	No
CJ1W-OD234	32 outputs	1 MIL connector	NPN	A	XW2Z-□□□K	XW2K-40G-O32C	Push-In Plus	No
						XW2K-40G-O32C-OUT	Push-In Plus	Yes
						XW2R-J34GD-C4	Phillips screw	No
						XW2R-E34GD-C4	Slotted screw (rise up)	No
CJ1W-OD261	64 outputs	2 Fujitsu / OTAX connectors	NPN	B	XW2Z-□□□B (2 pcs)	XW2K-40G-O32B (2 pcs)	Push-In Plus	No
						XW2K-40G-O32B-OUT (2 pcs)	Push-In Plus	No
						XW2R-J34GD-C3 (2 pcs)	Phillips screw	Yes
						XW2R-E34GD-C3 (2 pcs)	Slotted screw (rise up)	No
CJ1W-OD262	64 outputs	2 MIL connectors	PNP	B	XW2Z-□□□K (2 pcs)	XW2K-40G-O32C (2 pcs)	Push-In Plus	No
						XW2K-40G-O32C-OUT (2 pcs)	Push-In Plus	No
						XW2R-J34GD-C4 (2 pcs)	Phillips screw	Yes
						XW2R-E34GD-C4 (2 pcs)	Slotted screw (rise up)	No
CJ1W-OD263	64 outputs	2 MIL connectors	NPN	B	XW2Z-□□□K (2 pcs)	XW2K-40G-O32C (2 pcs)	Push-In Plus	No
						XW2K-40G-O32C-OUT (2 pcs)	Push-In Plus	Yes
						XW2R-J34GD-C4 (2 pcs)	Phillips screw	No
						XW2R-E34GD-C4 (2 pcs)	Slotted screw (rise up)	No

* The box □ is replaced by the cable length.
Note: For details, refer to the XW2K series Datasheet (Cat. No. G152) and XW2R Datasheet.

chanhvinh.com

3. Connecting I/O Relay Terminals

Connection Patterns for I/O Relay Terminals

Pattern	Configuration
A	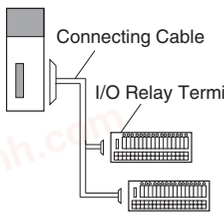
B	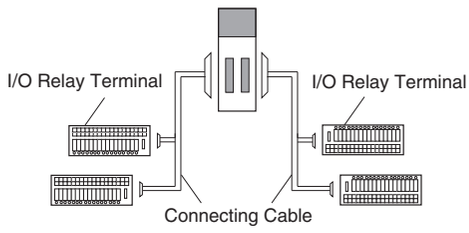

Combination of I/O Units with I/O Relay Terminals and Connecting Cables

I/O Units				Connection pattern	Connecting Cables		I/O Relay Terminals			
Model	I/O capacity	External connectors	Polarity		Model *1	Quantity required	Model	I/O points	Quantity required	Wiring method
CJ1W-OD231	32 outputs	1 Fujitsu / OTAX connector (40 p)	Sinking (NPN)	A	XW2Z-RO□C-□	1	G70V-SOC16P(-C4)	16	2	Push-in spring
							G7TC-OC16	16		Screw terminal
							G70D-SOC/FOM16	16		
							G70D-VSOC16/VFOM16	16		
							G70A-ZOC16-3 *2	16		
CJ1W-OD232	32 outputs	1 MIL connector (40 p)	Sourcing (PNP)	A	XW2Z-RO□-□-D1	1	G70A-ZOC16-4 *2	16	2	Screw terminal
							G70D-SOC/FOM16-1	16		
					XW2Z-RI□-□-D1	1	G7TC-OC16-1	16		
CJ1W-OD233	32 outputs	1 MIL connector (40 p)	Sinking (NPN)	A	XW2Z-RO□-□-D1	1	G70V-SOC16P(-C4)	16	2	Push-in spring
							G7TC-OC16	16		Screw terminal
							G70D-SOC/FOM16	16		
							G70D-VSOC16/VFOM16	16		
							G70A-ZOC16-3 *2	16		
CJ1W-OD234	32 outputs	1 MIL connector (40 p)	Sinking (NPN)	A	XW2Z-RO□C-□	1	G70V-SOC16P(-C4)	16	2	Push-in spring
							G7TC-OC16	16		Screw terminal
							G70D-SOC/FOM16	16		
							G70D-VSOC16/VFOM16	16		
							G70A-ZOC16-3 *2	16		
CJ1W-OD261	64 outputs	2 Fujitsu / OTAX connectors (40 p)	Sinking (NPN)	B	XW2Z-RO□C-□	2	G70V-SOC16P(-C4)	16	4	Push-in spring
							G7TC-OC16	16		Screw terminal
							G70D-SOC/FOM16	16		
							G70D-VSOC16/VFOM16	16		
							G70A-ZOC16-3 *2	16		
CJ1W-OD262	64 outputs	2 MIL connectors (40 p)	Sourcing (PNP)	B	XW2Z-RO□-□-D1	2	G70V-SOC16P-1(-C4)	16	4	Push-in spring
							G70A-ZOC16-4 *2	16		Screw terminal
							G70D-SOC/FOM16-1	16		
					XW2Z-RI□-□-D1	2	G7TC-OC16-1	16		
CJ1W-OD263	64 outputs	2 MIL connectors (40 p)	Sinking (NPN)	B	XW2Z-RO□-□-D1	2	G70V-SOC16P(-C4)	16	4	Push-in spring
							G7TC-OC16	16		Screw terminal
							G70D-SOC/FOM16	16		
							G70D-VSOC16/VFOM16	16		
							G70A-ZOC16-3 *2	16		

*1. The box □ is replaced by the cable length.
*2. The G70A-ZOC16-3/4 has I/O terminal sockets. Mounted relays are sold separately. In addition, an G70A-ZOC16-3/4 will be SPDT × 16 points with G2R relays.

chanhvinh.com

Dimensions

(Unit: mm)

8-point/16-point Units (18-point Terminal Blocks)

CJ1W-OC201/ OC211/ OA201/ OD201 / OD202/ OD203/ OD204/ OD211/ OD213 / OD212



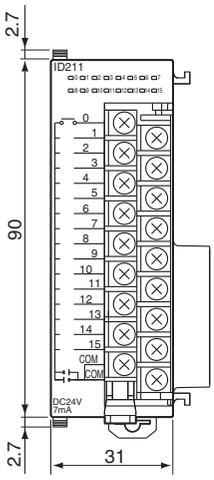

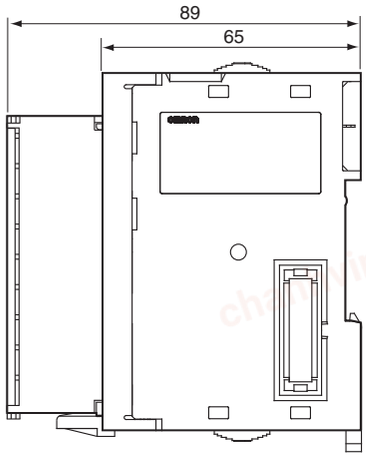

32-point Unit (Output Units)

With Fujitsu / OTAX-Compatible Connector (40-pin × 1)

CJ1W-OD231



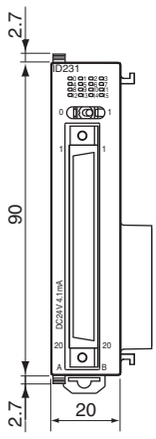

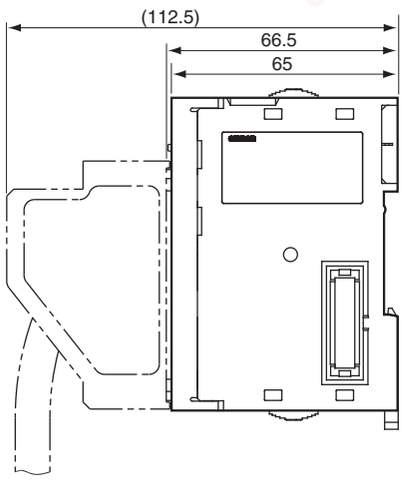

With MIL Connector (40-pin × 1)

CJ1W-OD232 / OD233 / OD234



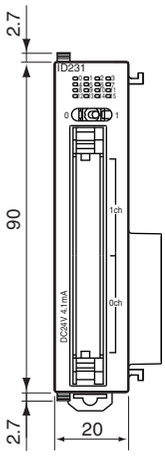

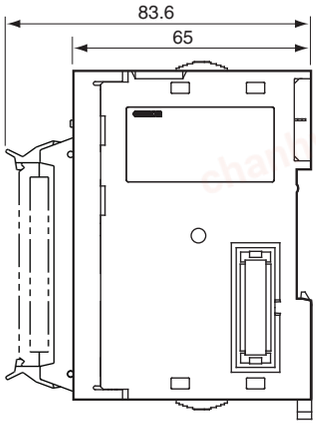

chanhvinh.com

64-point Units (Output Units)

With Fujitsu / OTAX-Compatible Connector (40-pin × 2)

CJ1W-OD261



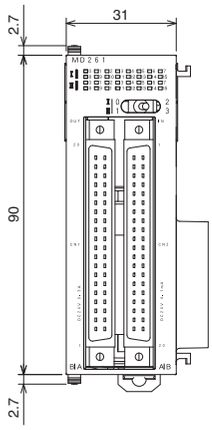

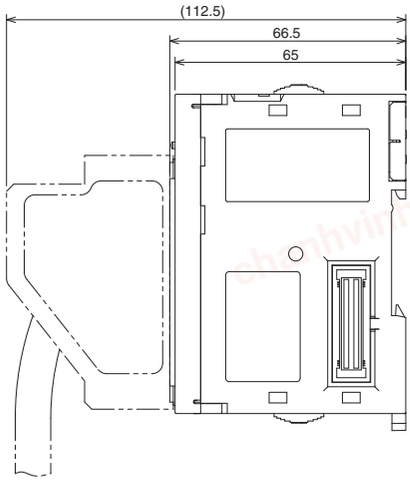

With MIL Connector (40-pin × 2)

CJ1W-OD262 / OD263



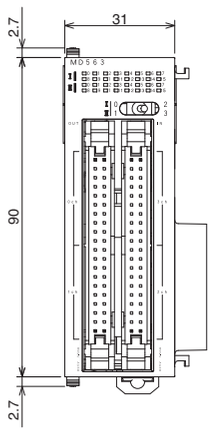

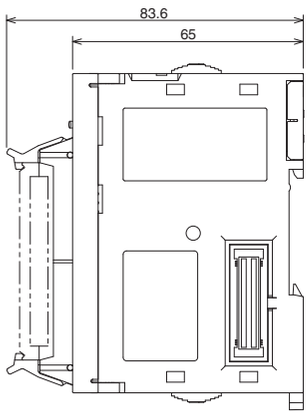

Related Manuals

Name	Cat. No.	Contents
CJ-series CJ2 CPU Unit Hardware User's Manual CJ2H-CPU6□-EIP CJ2H-CPU6□ CJ2M-CPU□□	W472	Describes the following for CJ2 CPU Units: • Overview and features • Basic system configuration • Part nomenclature and functions • Mounting and setting procedure • Remedies for errors • Also refer to the *Software User's Manual* (W473).
CJ Series CJ1H-CPU□□H-R, CJ1G/H-CPU□□H, CJ1G-CPU□□P, CJ1G-CPU□□, CJ1M-CPU□□ Programmable Controllers Operation Manual	W393	Provides an outlines of and describes the design, installation, maintenance, and other basic operations for the CJ-series PLCs.
NJ-series CPU Unit Hardware User's Manual NJ501-□□□□	W500	An introduction to the entire NJ-series system is provided along with the following information on a Controller built with an NJ501 CPU Unit. • Features and system configuration • Introduction • Part names and functions • General specifications • Installation and wiring • Maintenance and inspection Use this manual together with the NJ-series CPU Unit Software User's Manual (Cat. No. W501).

chanhvinh.com

Terms and Conditions Agreement

Read and understand this catalog.
Please read and understand this catalog before purchasing the products. Please consult your OMRON representative if you have any questions or comments.

Warranties.
(a) Exclusive Warranty. Omron's exclusive warranty is that the Products will be free from defects in materials and workmanship for a period of twelve months from the date of sale by Omron (or such other period expressed in writing by Omron). Omron disclaims all other warranties, express or implied.
(b) Limitations. OMRON MAKES NO WARRANTY OR REPRESENTATION, EXPRESS OR IMPLIED, ABOUT NON-INFRINGEMENT, MERCHANTABILITY OR FITNESS FOR A PARTICULAR PURPOSE OF THE PRODUCTS. BUYER ACKNOWLEDGES THAT IT ALONE HAS DETERMINED THAT THE
PRODUCTS WILL SUITABLY MEET THE REQUIREMENTS OF THEIR INTENDED USE.
Omron further disclaims all warranties and responsibility of any type for claims or expenses based on infringement by the Products or otherwise of any intellectual property right. (c) Buyer Remedy. Omron's sole obligation hereunder shall be, at Omron's election, to (i) replace (in the form originally shipped with Buyer responsible for labor charges for removal or replacement thereof) the non-complying Product, (ii) repair the non-complying Product, or (iii) repay or credit Buyer an amount equal to the purchase price of the non-complying Product; provided that in no event shall Omron be responsible for warranty, repair, indemnity or any other claims or expenses regarding the Products unless Omron's analysis confirms that the Products were properly handled, stored, installed and maintained and not subject to contamination, abuse, misuse or inappropriate modification. Return of any Products by Buyer must be approved in writing by Omron before shipment. Omron Companies shall not be liable for the suitability or unsuitability or the results from the use of Products in combination with any electrical or electronic components, circuits, system assemblies or any other materials or substances or environments. Any advice, recommendations or information given orally or in writing, are not to be construed as an amendment or addition to the above warranty.
See http://www.omron.com/global/ or contact your Omron representative for published information.

Limitation on Liability; Etc.
OMRON COMPANIES SHALL NOT BE LIABLE FOR SPECIAL, INDIRECT, INCIDENTAL, OR CONSEQUENTIAL DAMAGES, LOSS OF PROFITS OR PRODUCTION OR COMMERCIAL LOSS IN ANY WAY CONNECTED WITH THE PRODUCTS, WHETHER SUCH CLAIM IS BASED IN CONTRACT, WARRANTY, NEGLIGENCE OR STRICT LIABILITY.
Further, in no event shall liability of Omron Companies exceed the individual price of the Product on which liability is asserted.

Suitability of Use.
Omron Companies shall not be responsible for conformity with any standards, codes or regulations which apply to the combination of the Product in the Buyer's application or use of the Product. At Buyer's request, Omron will provide applicable third party certification documents identifying ratings and limitations of use which apply to the Product. This information by itself is not sufficient for a complete determination of the suitability of the Product in combination with the end product, machine, system, or other application or use. Buyer shall be solely responsible for determining appropriateness of the particular Product with respect to Buyer's application, product or system. Buyer shall take application responsibility in all cases.
NEVER USE THE PRODUCT FOR AN APPLICATION INVOLVING SERIOUS RISK TO LIFE OR PROPERTY OR IN LARGE QUANTITIES WITHOUT ENSURING THAT THE SYSTEM AS A WHOLE HAS BEEN DESIGNED TO ADDRESS THE RISKS, AND THAT THE OMRON PRODUCT(S) IS PROPERLY RATED AND INSTALLED FOR THE INTENDED USE WITHIN THE OVERALL EQUIPMENT OR SYSTEM.

Programmable Products.
Omron Companies shall not be responsible for the user's programming of a programmable Product, or any consequence thereof.

Performance Data.
Data presented in Omron Company websites, catalogs and other materials is provided as a guide for the user in determining suitability and does not constitute a warranty. It may represent the result of Omron's test conditions, and the user must correlate it to actual application requirements. Actual performance is subject to the Omron's Warranty and Limitations of Liability.

Change in Specifications.
Product specifications and accessories may be changed at any time based on improvements and other reasons. It is our practice to change part numbers when published ratings or features are changed, or when significant construction changes are made. However, some specifications of the Product may be changed without any notice. When in doubt, special part numbers may be assigned to fix or establish key specifications for your application. Please consult with your Omron's representative at any time to confirm actual specifications of purchased Product.

Errors and Omissions.
Information presented by Omron Companies has been checked and is believed to be accurate; however, no responsibility is assumed for clerical, typographical or proofreading errors or omissions.

2024.4

In the interest of product improvement, specifications are subject to change without notice.

OMRON Corporation
Industrial Automation Company

http://www.ia.omron.com/

(c)Copyright OMRON Corporation 2024 All Right Reserved.