chanhvinh.com

novotechnik
Siedle Group

Short Stroke Transducer Potentiometric

TEX
Pivot Head Mounting
up to 300 mm

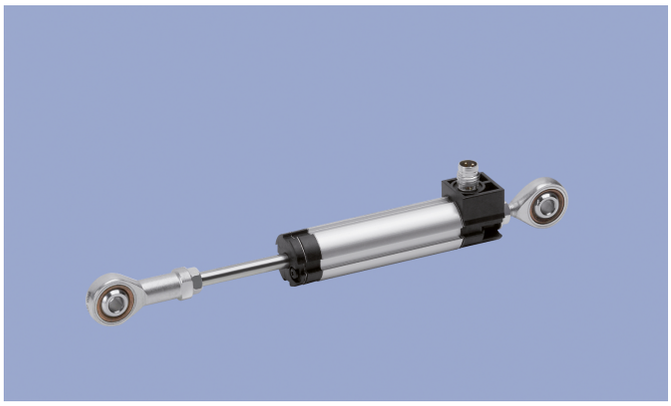

Special Features
- Compact dimensions
- Protection class IP54
- Mountable over back-lash free pivot heads with a large angle of free movement (up to ±12,5°)
- Very long life (depending on application) up to 100 million movements
- Outstanding linearity up to ±0.05 %
- Variable mechanical customer interfaces
- Cable or connector version available
- Heavy-duty version IP67 see separate data sheet TX2

Applications
- Manufacturing Engineering (plastic injection molding, textile, packaging, sheet metal and wood work machinery)
- Automation technology

Compact design and easy to assemble via pivot heads characterize this inexpensive transducer. This transducer is suitable for various industry applications. By the simplicity of the measuring system -passive and absolute - the transducer is largely insensitive to electrical interference.
The measuring value remains despite power failure. The electrical connection can be made via a radial plug connector, a radial or axial cable.
Transducers with and without restoring spring and mounting clamp, central thread or flange plates see separate data sheets TEX.

Description

Material	Housing: aluminium, anodized Actuating rod: stainless steel AISI 303, 1.4305, rotatable, external thread M5
Mounting	Pivot Head Mounting (Stainless steel pivot heads on request)
Bearing	Slide bearing
Resistance element	Conductive plastic
Wiper	Precious metal multi-finger wiper
Electrical connection	Cable 3x 0.14 mm² (AWG 26), PVC, shielded, L = 2 m or 5 m / Connector M8x1, 3-pin

Mechanical Data

Type	**TEX 0010**	**TEX 0025**	**TEX 0050**	**TEX 0075**	**TEX 0100**	**TEX 0125**	**TEX 0150**	**TEX 0175**	**TEX 0200**	**TEX 0250**	**TEX 0300**
Dimensions	See dimension drawing										
Length of housing (dim. A ±2 mm)	63 mm	78 mm	103 mm	128 mm	153 mm	194 mm	219 mm	244 mm	269 mm	319 mm	369 mm
Mechanical travel	14 mm	29 mm	54 mm	79 mm	104 mm	132 mm	157 mm	182 mm	207 mm	257 mm	307 mm
Min. distance between pivot heads (dim. C, nominal)	Short model code 415 and dimension D = 18 mm: dimension A + 51.5 mm Long model code 413 and dimension D = 25 mm: dimension A + 58.5 mm										
Weight (cable L = 2 m/connector version)	111/79 g	116/84 g	126/94 g	136/104 g	146/114 g	186/154 g	196/164 g	206/174 g	216/184 g	236/204 g	256/224 g
Operating force, horizontal	≤ 3 N (at RT 20°C)										

chanhvinh.com

novotechnik
Siedle Group

Ordering Specifications

Ordering Specifications

Preferred types printed in bold

Electrical model
002: Linearized

Electrical connection
101: Connector M8x1, 3-pin
202: Cable, 3-pole, shielded, L = 2 m
205: Cable, 3-pole, shielded, L = 5 m

T E X – 0 1 5 0 – 4 1 5 – 0 0 2 – 2 0 2

Mechanical version
413: Pivot heads long version
415: Pivot heads short version
Stainless steel pivot heads on request

Series

Electrical measuring range
Standard lengths 0010 up to 0300 mm
Other lengths on request

Accessories included in delivery

- 2 pivot heads and 2 lock nuts

chanhvinh.com

novotechnik
Siedle Group

Drawing

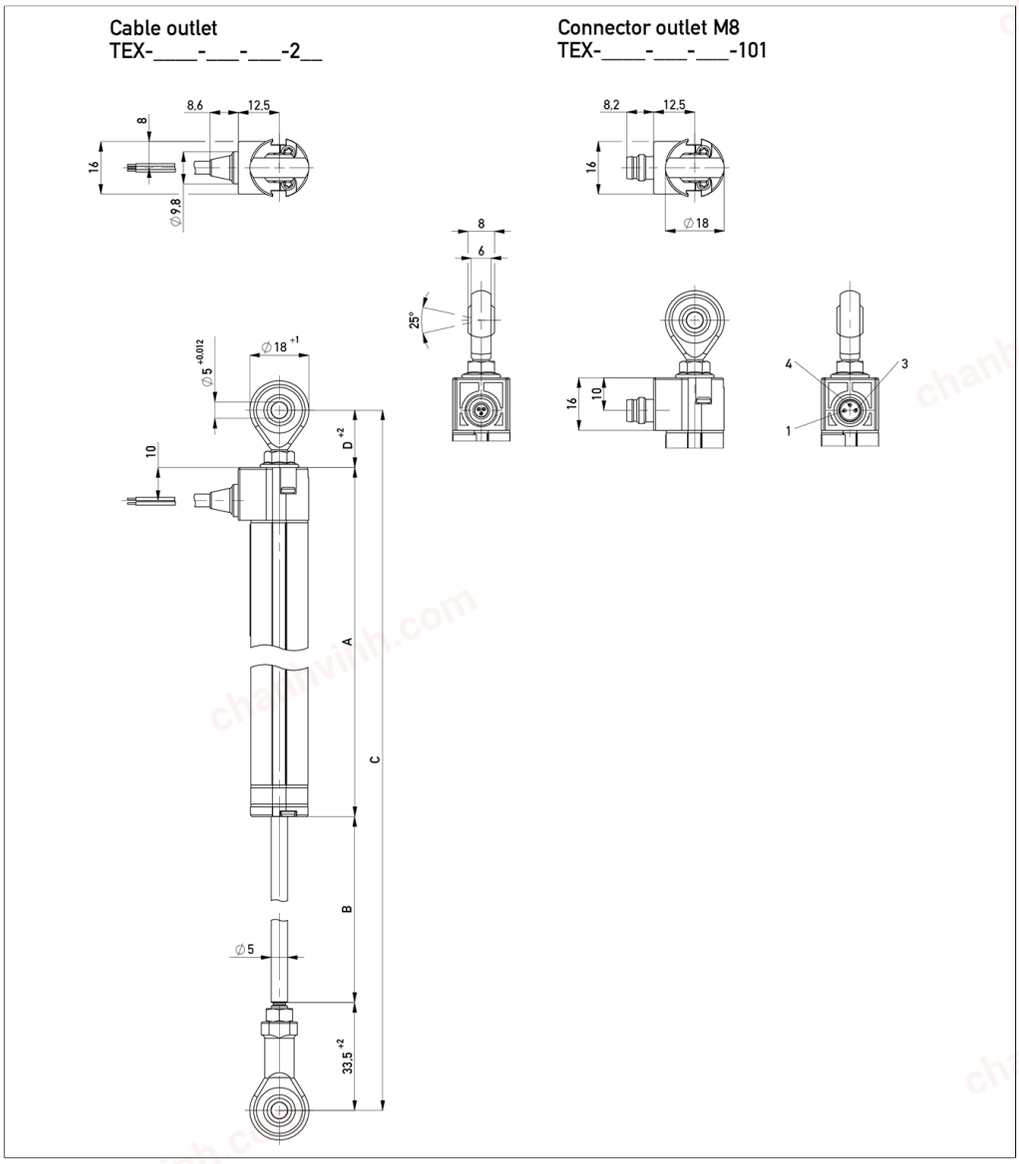

CAD data see
www.novotechnik.de/en/download/cad-data/

chanhvinh.com

novotechnik
Siedle Group

Technical Data

Type	TEX 0010	TEX 0025	TEX 0050	TEX 0075	TEX 0100	TEX 0125	TEX 0150	TEX 0175	TEX 0200	TEX 0250	TEX 0300
Electrical measuring range	0 ... 12 mm	0 ... 27 mm	0 ... 52 mm	0 ... 77 mm	0 ... 102 mm	0 ... 130 mm	0 ... 155 mm	0 ... 180 mm	0 ... 205 mm	0 ... 255 mm	0 ... 305 mm
Defined electr. measuring range	0 ... 10 mm	0 ... 25 mm	0 ... 50 mm	0 ... 75 mm	0 ... 100 mm	0 ... 125 mm	0 ... 150 mm	0 ... 175 mm	0 ... 200 mm	0 ... 250 mm	0 ... 300 mm
Resistance value [kΩ]	1	1	2	3	4	5	6	7	8	10	12
Resistance tolerance	± 20 %										
Independent linearity [± %FS]	0.25	0.2	0.1	0.1	0.1	0.05	0.05	0.05	0.05	0.05	0.05
Repeatability	≤ ±0.01 mm										
Recommended operating wiper current	≤ 1 µA										
Max. wiper current in case of malfunction	10 mA										
Max. permissible supply voltage Ub	42 VDC										
Effective temp. coefficient of the output-to-applied voltage ratio	typ. 5 ppm/K										
Insulation resistance (500 VDC)	≥ 10 MΩ										
Dielectric strength (500 VAC, 50 Hz)	≤ 100 µA										
Environmental Data											
Max. operational speed	10 m/s										
Vibration IEC 60068-2-6	20 g, 5 ... 2000 Hz, Amax = 0.75 mm										
Shock IEC 60068-2-27	50 g, 6 ms										
Protection class DIN EN 60529	IP54										
Operating temperature	-40 ... +85°C										
Operating humidity	0 ... 95 % R.H. (no condensation)										
Life	typ. > 100 Mio. movements										
Functional safety	If you need assistance in using our products in safety-related systems, please contact us										
Traceability	Serial number on type labeling: production batch of the sensor assembly and relevant sensor components										
Conformity/Approval	CE, UKCA see https://www.novotechnik.de/en/downloads/certificates/declarations-of-conformity-eu/uk WEEE see https://www.novotechnik.de/en/downloads/certificates/eu-directive-weee/										

Important:
All values specified in this data sheet for linearity, lifetime and temperature coefficient are only valid for a sensor used as a voltage divider with virtually no load applied to the wiper (Ie ≤ 1 µA).

Connection Assignment

Signal	Connector code 101	Cable code 2_ _
Connection 1	Pin 1	BN
Connection 4 Signal output	Pin 4	WH
Connection 3	Pin 3	GN

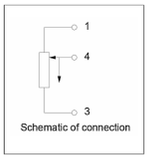

Schematic of connection

chanhvinh.com

novotechnik
Siedle Group

Sensor Mounting



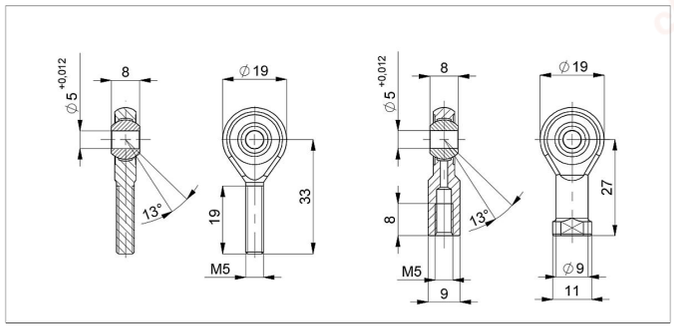

Z-G-04
Conversion kit for series TEX and TX2: stainless steel version with 2 pivot heads.

P/N	Pack. unit [pcs]
400108552	2

chanhvinh.com

novotechnik
Siedle Group

Connector System M8



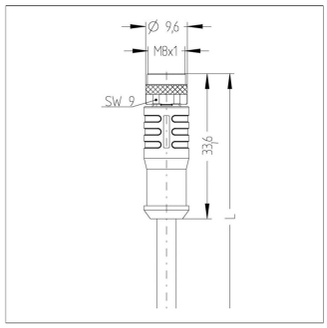

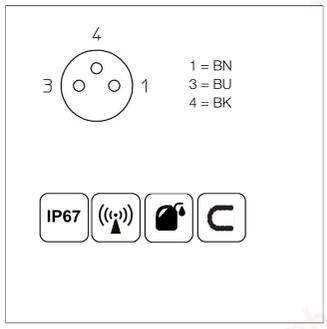

EEM-33-56/58/60
M8x1 Mating female connector, 3-pin, straight, with molded cable, shielded, IP67, open ended

Plug housing	TPU
Cable sheath	PUR, Ø = max. 6 mm, -40 ... +90°C
Lead wires	PP, 3x 0.34 mm²*

P/N	Type	Length
400005602	EEM-33-56	2 m
400005604	EEM-33-58	5 m
400005606	EEM-33-60	10 m



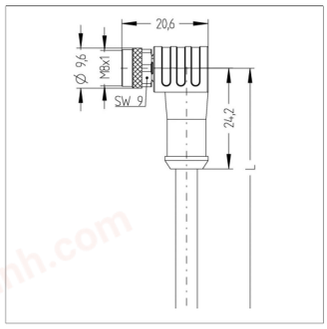

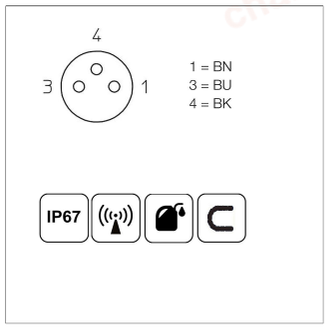

EEM-33-57/59/61
M8x1 Mating female connector, 3-pin, angled, with molded cable, shielded, IP67, open ended

Plug housing	TPU
Cable sheath	PUR, Ø = max. 6 mm, -40 ... +90°C
Lead wires	PP, 3x 0.34 mm²*

P/N	Type	Length
400005603	EEM-33-57	2 m
400005605	EEM-33-59	5 m
400005607	EEM-33-61	10 m

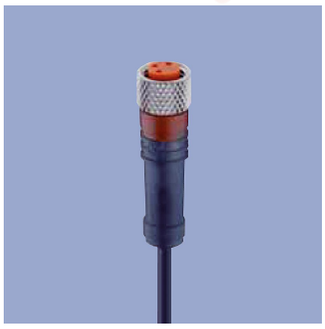

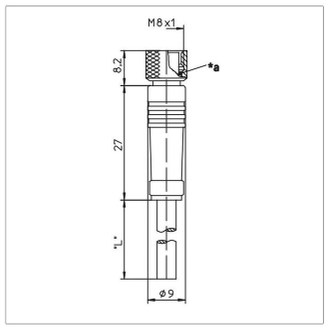

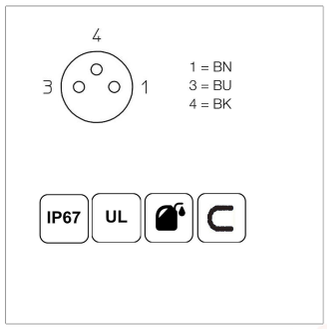

EEM-33-64/66/68
M8x1 Mating female connector, 3-pin, straight, with molded cable, not shielded, IP67, open ended

Plug housing	PA
Cable sheath	PUR, Ø = max. 6 mm, -40 ... +90°C
Lead wires	PP, 0.34 mm²

P/N	Type	Length
400005617	EEM-33-64	2 m
400005619	EEM-33-66	5 m
400005643	EEM-33-68	10 m



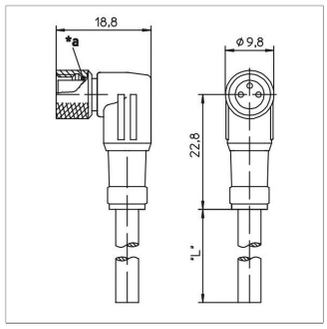

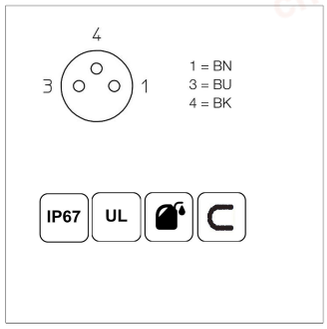

EEM-33-65/67/69
M8x1 Mating female connector, 3-pin, angled, with molded cable, not shielded, IP67, open ended

Plug housing	PA
Cable sheath	PUR, Ø = max. 6 mm, -40 ... +90°C
Lead wires	PP, 0.34 mm²

P/N	Type	Length
400005618	EEM-33-65	2 m
400005620	EEM-33-67	5 m
400005644	EEM-33-69	10 m

IP67 Protection class IP67 DIN EN 60529

IP68 Protection class IP68 DIN EN 60529

Very good Electromagnetic Compatibiliy (EMC) and shield systems

Very good resistance to oils, coolants and lubricants

Suited for applications in dragchains

UL UL - approved

CAN CAN-Bus

chanhvinh.com

novotechnik
Siedle Group

Signal Processing



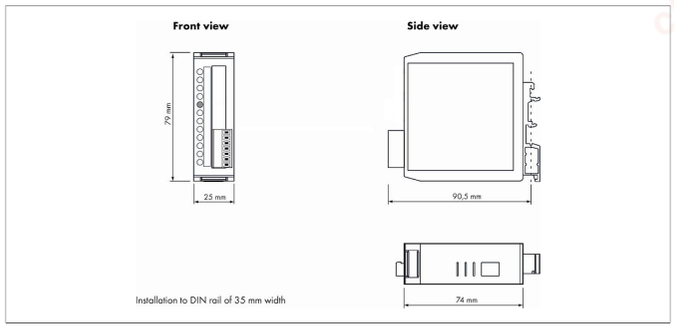

MUP-080
Cost-efficient signal conditioner with fixed output range, voltage or current output. Not adjustable.
Detailed data see separate data sheet.

P/N	Type	Output
400054220	MUP-080-111	0 ... 10 V
400054221	MUP-080-113	4 ... 20 mA



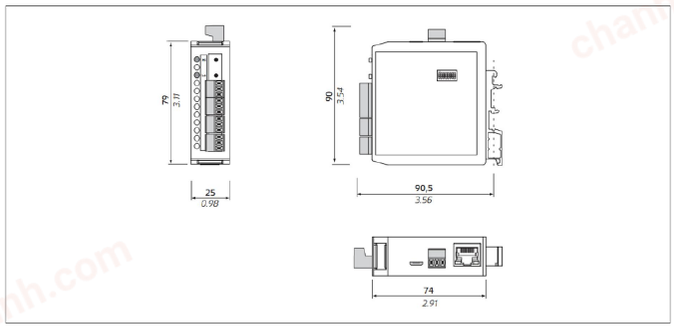

MUP-410
Signal conditioner with simple teach-in function to adapt start and end point. Switchable current or voltage outputs. With galvanic isolation.
Detailed data see separate data sheet.

P/N	Type	Output
400108799	MUP-410-11	4 ... 20 mA, 0 ... 10 V, 0 ... 2/5 V, ± 10 V, 0 ... 5/20 mA



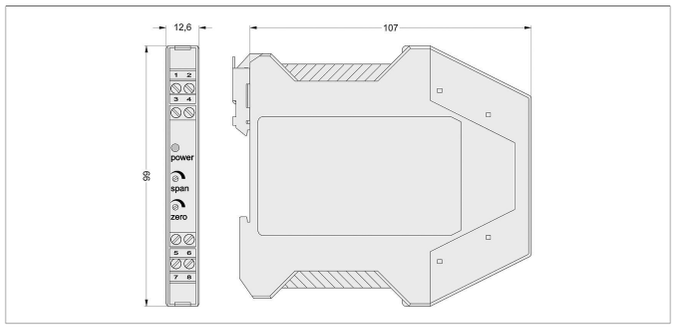

MUP-110
Signal conditioner in compact size with voltage or current output, adjustable zero and span.
Detailed data see separate data sheet.

P/N	Type	Output
400054010	MUP-110-0	0 ... 20 mA
400054011	MUP-110-1	0 ... 10 V
400054014	MUP-110-4	4 ... 20 mA



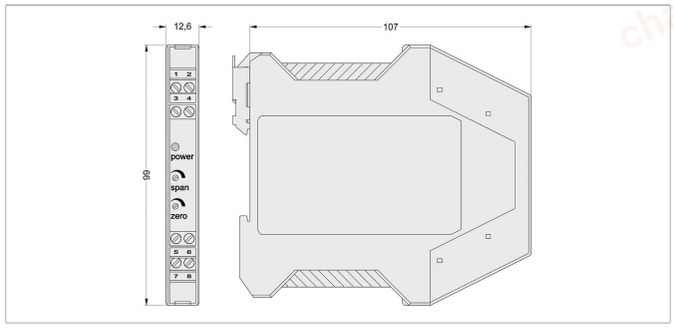

MUP-160
Signal conditioner in compact size with voltage or current output, adjustable zero and span. With galvanic isolation.
Detailed data see separate data sheet.

P/N	Type	Output
400054060	MUP-160-0	0 ... 20 mA
400054061	MUP-160-1	0 ... 10 V
400054064	MUP-160-4	4 ... 20 mA

chanhvinh.com

novotechnik
Siedle Group

Signal Processing

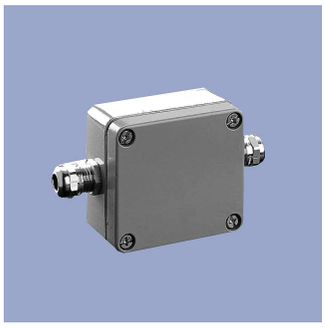

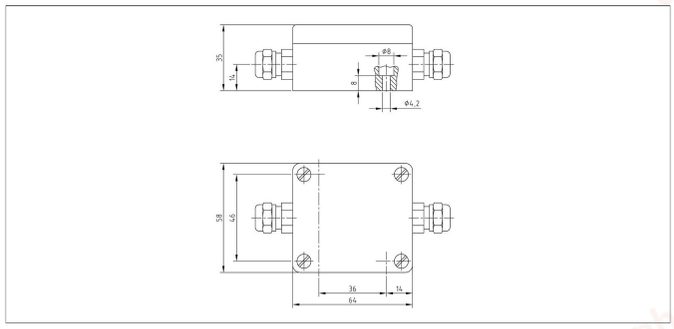

MUK-350

Signal conditioner inside robust housing, even for outside use. Zero point and span adjustable. Detailed data see separate data sheet.

P/N	Type	Output
400054171	MUK-350-0	0 ... 20 mA
400054172	MUK-350-1	0 ... 10 V
400054173	MUK-350-4	4 ... 20 mA
400054174	MUK-350-6	± 10 V



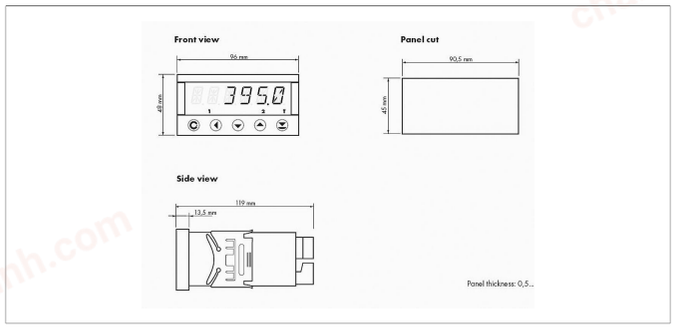

MAP-4000

Multifunctional measuring device with digital display for direct connnection of potentiometric and normalized signals.

- Supply voltage 10...30 VDC, 80...250 VDC or AC
- High accuracy up to 0.1%
- Adjustable supply voltage for sensors 5...24 V
- Temperature coefficient 100 ppm/K
- Optional RS 232, RS 485, analog output, limited switch
- Complete data see separate data sheet

chanhvinh.com

novotechnik
Siedle Group

Novotechnik
Messwertaufnehmer OHG
P.O.Box 4220
73745 Ostfildern (Germany)
Horbstrasse 12
73760 Ostfildern (Germany)
Phone +49 711 4489-0
Fax +49 711 4489-118
info@novotechnik.de
www.novotechnik.de

© Jun 30, 2025

The specifications contained in our datasheets are intended solely for informational purposes. The documented specification values are based on ideal operational and environmental conditions and can vary significantly depending on the actual customer application. Using our products at or close to one or more of the specified performance ranges can lead to limitations regarding other performance parameters. It is therefore necessary that the end user verifies relevant performance parameters in the intended application. We reserve the right to change product specifications without notice.