chanhvinh.com

08150 Latch

Item description/product images



Description

Material:
Body 1.0036, snapper 1.0503

Version:
Body phosphated, snapper black oxidized.

Note:
Missing dimensions for snapper see 07560.

Drawings

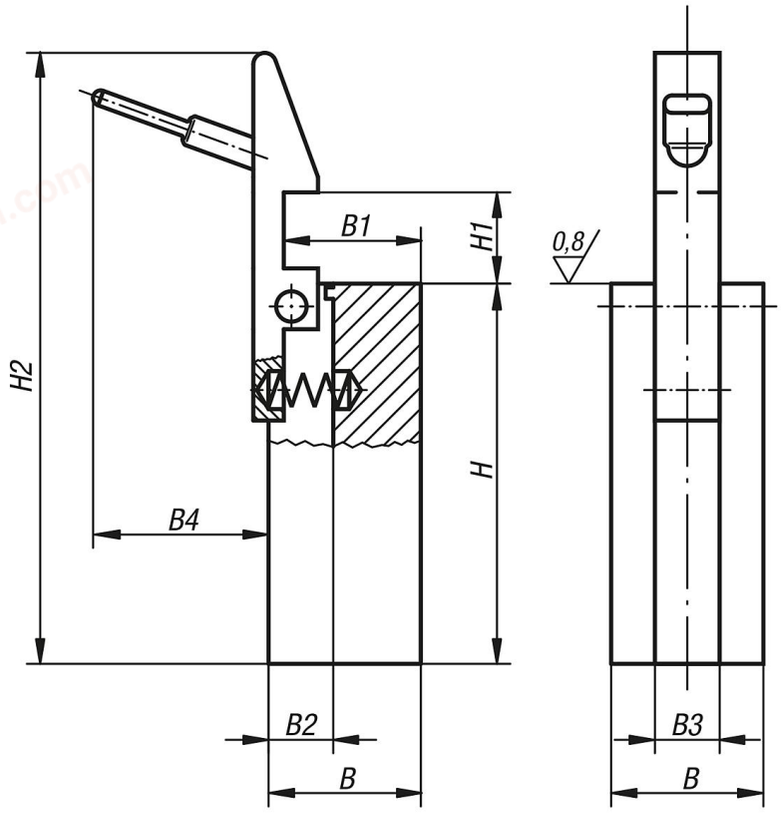

chanhvinh.com

08150 Latch

Item No.	B	B1	B2	B3	B4	H	H1	H2
08150-01	20	18	9	8,5	23	50	12	77
08150-02	30	28	11	10,5	24	63	16	99
08150-03	40	36	14	14,5	24	100	25	145

chanhvinh.com