chanhvinh.com

08100 Hinge blocks short

Item description/product images

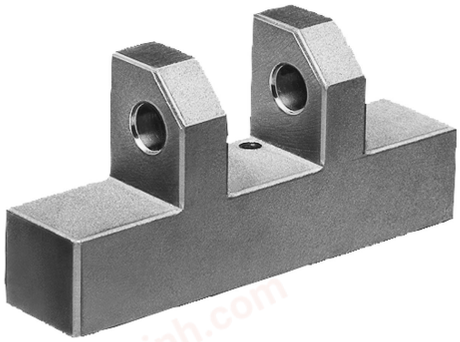

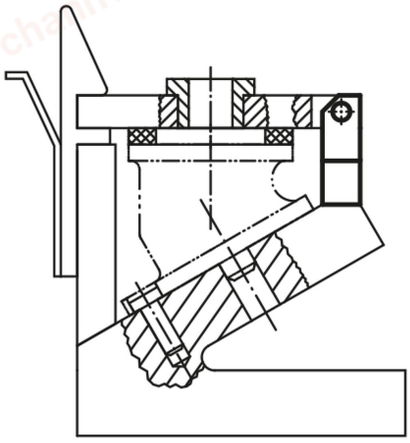

Description

Material:
1.0036

Version:
Phosphated

Drawings

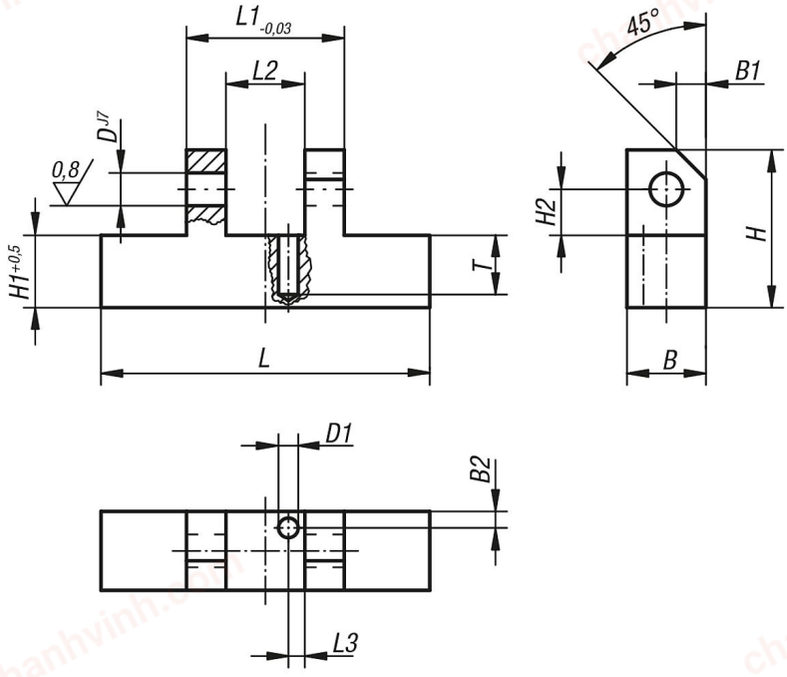

Order No.	L	L1	L2	L3	B	B1	B2	H	H1	H2	D	D1	T
08100-01	50	24	12	2,5	12	4,5	2,5	24	11	7	5	3	9
08100-02	65	31	16	2,5	15	6	2,5	30	13	9	6	3	10

chanhvinh.com

08100 Hinge blocks short

Order No.	L	L1	L2	L3	B	B1	B2	H	H1	H2	D	D1	T
08100-03	100	49	20	2,5	20	8	2,5	48	27	11	8	3	10

chanhvinh.com