chanhvinh.com

SLIDE SWITCHES (FULL PITCH) CFS

RoHS compliant

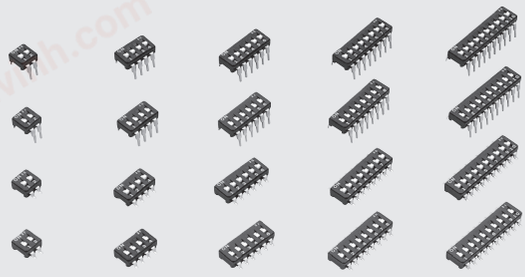

INTERNAL STRUCTURE

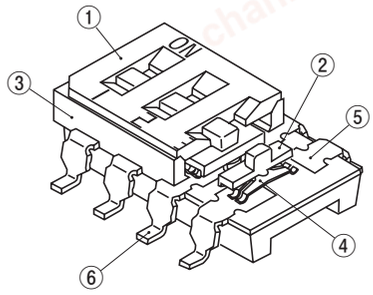

Part name		Material	Flammability
①	Cover	Polyphenylenesulphide	UL94V-0
②	Slider	Polyamide	
③	Housing	Polyphenylenesulphide	
④	Slider contact	Copper alloy, Gold-plated	–
⑤	Fixed contact		
⑥	Terminal pin		

FEATURES

- RoHS compliant
- Excellent contact stability by twin Gold-plated contact

APPLICATIONS

- Communication devices, Air-conditioning equiment, Vending machines and various control equipment

PART NUMBER DESIGNATION

C F S - 0 4 0 1 T B

Series name

No. of bits
01 : 1 bit
02 : 2 bits
03 : 3 bits
04 : 4 bits
05 : 5 bits
06 : 6 bits
07 : 7 bits
08 : 8 bits
09 : 9 bits
10 : 10 bits

Structure
00 : Flat knob • washable type (With seal tape)
01 : Flat knob • non-washable type (Without seal tape)
02 : Convex knob of 0.6 mm • non-washable type (Without seal tape)
03 : Convex knob of 1 mm • non-washable type (Without seal tape) ※1

※ 1 : J-hook type is not available

Shape of terminal
A : J-hook
B : Gull wing
C : Through hole pin

Form of packaging
T : Taping (Reel)
M : Magazine

※ Please refer to the LIST OF PART NUMBERS when placing orders.

chanhvinh.com

CFS
SLIDE SWITCHES (FULL PITCH)

LIST OF PART NUMBERS

No. of bits	Form of packaging	Structure						Pieces in package
		Flat knob · non-washable type (Without seal tape)			Flat knob · washable type (With seal tape)			
		A (J-hook)	B (Gull wing)	C (Through hole pin)	A (J-hook)	B (Gull wing)	C (Through hole pin)	
1	Taping	CFS-0101TA	CFS-0101TB		CFS-0100TA	CFS-0100TB		1000 pcs/reel
	Magazine	CFS-0101MA	CFS-0101MB	CFS-0101MC	CFS-0100MA	CFS-0100MB	CFS-0100MC	118 pcs./stick
2	Taping	CFS-0201TA	CFS-0201TB		CFS-0200TA	CFS-0200TB		1000 pcs./reel
	Magazine	CFS-0201MA	CFS-0201MB	CFS-0201MC	CFS-0200MA	CFS-0200MB	CFS-0200MC	72 pcs./stick
3	Taping	CFS-0301TA	CFS-0301TB		CFS-0300TA	CFS-0300TB		1000 pcs./reel
	Magazine	CFS-0301MA	CFS-0301MB	CFS-0301MC	CFS-0300MA	CFS-0300MB	CFS-0300MC	52 pcs./stick
4	Taping	CFS-0401TA	CFS-0401TB		CFS-0400TA	CFS-0400TB		1000 pcs./reel
	Magazine	CFS-0401MA	CFS-0401MB	CFS-0401MC	CFS-0400MA	CFS-0400MB	CFS-0400MC	40 pcs./stick
5	Taping	CFS-0501TA	CFS-0501TB		CFS-0500TA	CFS-0500TB		1000 pcs./reel
	Magazine	CFS-0501MA	CFS-0501MB	CFS-0501MC	CFS-0500MA	CFS-0500MB	CFS-0500MC	32 pcs./stick
6	Taping	CFS-0601TA	CFS-0601TB		CFS-0600TA	CFS-0600TB		1000 pcs./reel
	Magazine	CFS-0601MA	CFS-0601MB	CFS-0601MC	CFS-0600MA	CFS-0600MB	CFS-0600MC	28 pcs./stick
7	Taping	CFS-0701TA	CFS-0701TB		CFS-0700TA	CFS-0700TB		1000 pcs./reel
	Magazine	CFS-0701MA	CFS-0701MB	CFS-0701MC	CFS-0700MA	CFS-0700MB	CFS-0700MC	24 pcs./stick
8	Taping	CFS-0801TA	CFS-0801TB		CFS-0800TA	CFS-0800TB		1000 pcs./reel
	Magazine	CFS-0801MA	CFS-0801MB	CFS-0801MC	CFS-0800MA	CFS-0800MB	CFS-0800MC	20 pcs./stick
9	Taping	CFS-0901TA	CFS-0901TB		CFS-0900TA	CFS-0900TB		1000 pcs./reel
	Magazine	CFS-0901MA	CFS-0901MB	CFS-0901MC	CFS-0900MA	CFS-0900MB	CFS-0900MC	18 pcs./stick
10	Taping	CFS-1001TA	CFS-1001TB		CFS-1000TA	CFS-1000TB		1000 pcs./reel
	Magazine	CFS-1001MA	CFS-1001MB	CFS-1001MC	CFS-1000MA	CFS-1000MB	CFS-1000MC	16 pcs./stick

No. of bits	Form of packaging	Structure					Pieces in package
		Convex knob of 0.6 mm · non-washable type (Without seal tape)			Convex knob of 1 mm · non-washable type (Without seal tape)		
		A (J-hook)	B (Gull wing)	C (Through hole pin)	B (Gull wing)	C (Through hole pin)	
1	Taping	CFS-0102TA	CFS-0102TB		CFS-0103TB		800 pcs./reel
	Magazine	CFS-0102MA	CFS-0102MB	CFS-0102MC	CFS-0103MB	CFS-0103MC	118 pcs./stick
2	Taping	CFS-0202TA	CFS-0202TB		CFS-0203TB		800 pcs./reel
	Magazine	CFS-0202MA	CFS-0202MB	CFS-0202MC	CFS-0203MB	CFS-0203MC	72 pcs./stick
3	Taping	CFS-0302TA	CFS-0302TB		CFS-0303TB		800 pcs./reel
	Magazine	CFS-0302MA	CFS-0302MB	CFS-0302MC	CFS-0303MB	CFS-0303MC	52 pcs./stick
4	Taping	CFS-0402TA	CFS-0402TB		CFS-0403TB		800 pcs./reel
	Magazine	CFS-0402MA	CFS-0402MB	CFS-0402MC	CFS-0403MB	CFS-0403MC	40 pcs./stick
5	Taping	CFS-0502TA	CFS-0502TB		CFS-0503TB		800 pcs./reel
	Magazine	CFS-0502MA	CFS-0502MB	CFS-0502MC	CFS-0503MB	CFS-0503MC	32 pcs./stick
6	Taping	CFS-0602TA	CFS-0602TB		CFS-0603TB		800 pcs./reel
	Magazine	CFS-0602MA	CFS-0602MB	CFS-0602MC	CFS-0603MB	CFS-0603MC	28 pcs./stick
7	Taping	CFS-0702TA	CFS-0702TB		CFS-0703TB		800 pcs./reel
	Magazine	CFS-0702MA	CFS-0702MB	CFS-0702MC	CFS-0703MB	CFS-0703MC	24 pcs./stick
8	Taping	CFS-0802TA	CFS-0802TB		CFS-0803TB		800 pcs./reel
	Magazine	CFS-0802MA	CFS-0802MB	CFS-0802MC	CFS-0803MB	CFS-0803MC	20 pcs./stick
9	Taping	CFS-0902TA	CFS-0902TB		CFS-0903TB		800 pcs./reel
	Magazine	CFS-0902MA	CFS-0902MB	CFS-0902MC	CFS-0903MB	CFS-0903MC	18 pcs./stick
10	Taping	CFS-1002TA	CFS-1002TB		CFS-1003TB		800 pcs./reel
	Magazine	CFS-1002MA	CFS-1002MB	CFS-1002MC	CFS-1003MB	CFS-1003MC	16 pcs./stick

⍁: Not manufactured
※ Verify the above part numbers when placing orders.
Taping and magazine version can be supplied only in reel or stick units.

chanhvinh.com

CFS
SLIDE SWITCHES (FULL PITCH)

STANDARD SPECIFICATIONS

Operating temp. range	– 40 ~ 85 °C
Storage temp. range	
Sealing	Washable type available with seal tape
Net weight	Approx. 0.15 g (CFS-01), Approx. 0.24 g (CFS-02), Approx. 0.33 g (CFS-03), Approx. 0.42 g (CFS-04), Approx. 0.51 g (CFS-05), Approx. 0.61 g (CFS-06), Approx. 0.70 g (CFS-07), Approx. 0.82 g (CFS-08), Approx. 0.90 g (CFS-09), Approx. 0.98 g (CFS-10)

ELECTRICAL CHARACTERISTICS

Contact rating Non-switching Switching Minimum	 DC50 V 100 mA DC6 V, 100 mA DC24 V, 25 mA DC20 mV 1 μA
Contact resistance	50 m Ω maximum
Insulation resistance	1000 M Ω (DC100 V) minimum
Dielectric strength	AC500 V, 60 s

MECHANICAL CHARACTERISTICS

Stroke	1 mm
Operation force	0.5 ~ 7 N {0.05 ~ 0.71 kgf}
Stop strength	10 N {1.02 kgf} 60 s
Solderability	245 ± 3 °C, 2 ~ 3 s
Soldering heat	Reflow : 255 °C (Peak temperature) Flow : 260 ± 3 °C, 5 ~ 6 s, two times maximum (Please refer to the profile below)
	Manual soldering : 350 ± 10 °C, 3 ~ 4 s
Shear (Adhesion)	5 N {0.51 kgf} 10 s
Substrate bending	Width 90 mm, bend 3 mm, 5 s, 1 time
Pull-off strength	5 N {0.51 kgf} 10 s

{ } : Reference only

ENVIRONMENTAL CHARACTERISTICS

Vibration	(Amplitude) 1.5 mm or (Acceleration) 98 m/s², 10-500 Hz, 3 directions for 10 cycles each
Shock	490 m/s², 11 ms, 6 directions for 3 times each
Load life	Continuous load 1000 cycles, DC6 ± 0.5 V, 100 ± 10 mA
Humidity	–10 ~ 65 °C, Relative humidity 0 ~ 96 %, 24 h for 10 cycles
High temp. exposure	85 °C, 96 h
Low temp. exposure	–40 °C, 96 h
Thermal shock	–40 (0.5 h) ~ 85 °C (0.5 h), 5 cycles

〈Reflow profile for soldering heat evaluation〉

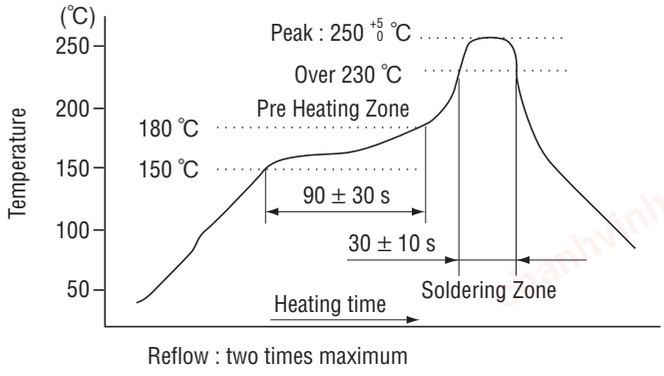

Reflow : two times maximum

chanhvinh.com

CFS
SLIDE SWITCHES (FULL PITCH)

OUTLINE DIMENSIONS

Unless otherwise specified, tolerance : ± 0.3 (Unit : mm)

●1 bit, J-hook

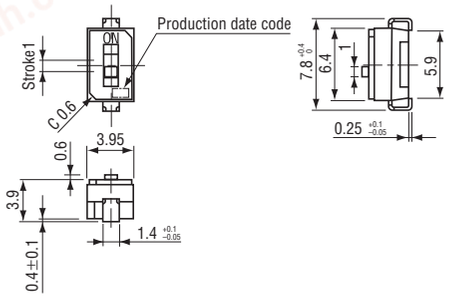

● 1 bit, Gull wing

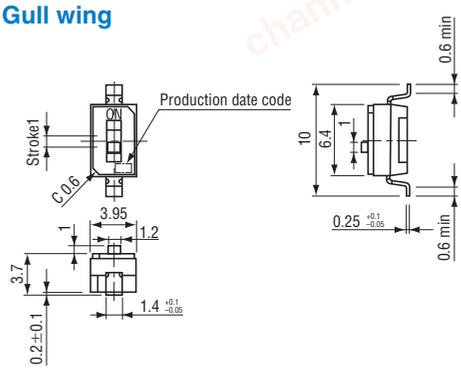

●Flat knob, J-hook

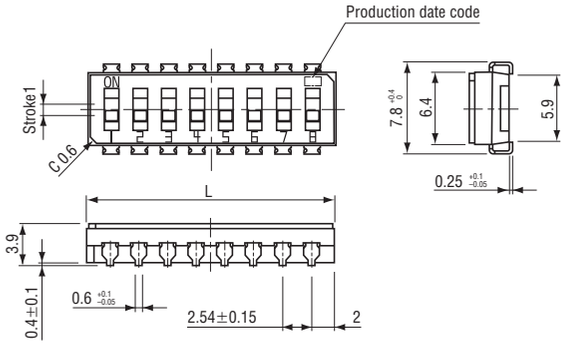

●Flat knob, Gull wing

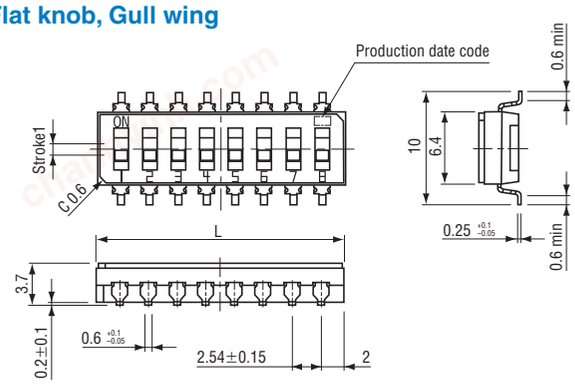

●Flat knob, Through hole pin

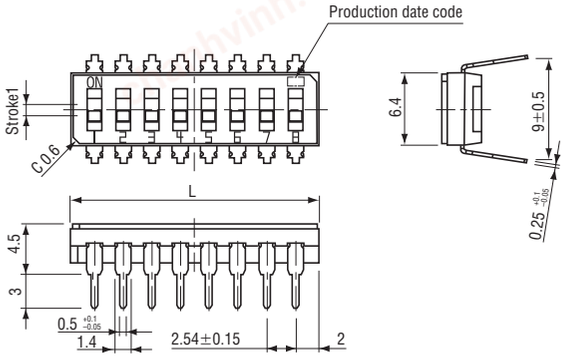

●Convex knob of 0.6 mm, J-hook

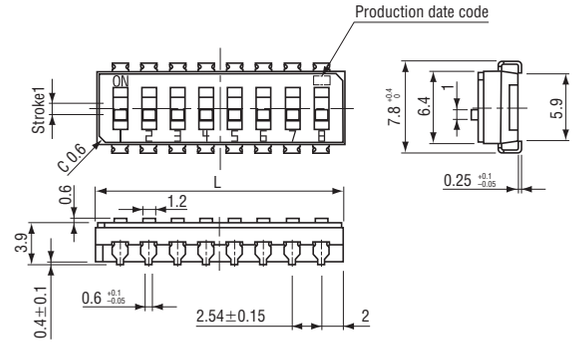

● Convex knob of 0.6 mm, Gull wing

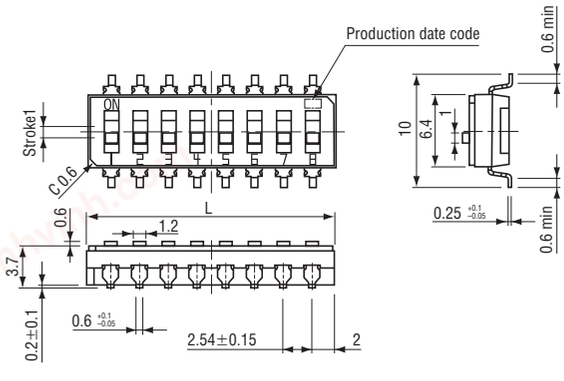

●Convex knob of 0.6 mm, Through hole pin

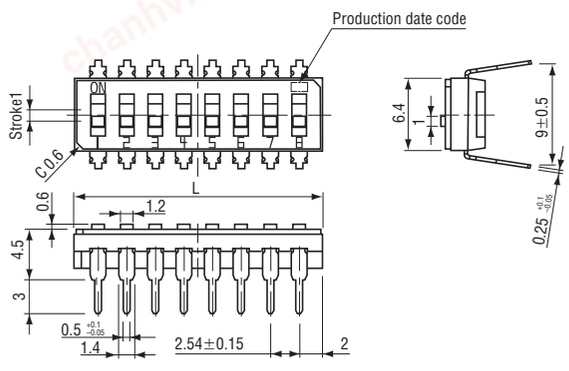

chanhvinh.com

CFS
SLIDE SWITCHES (FULL PITCH)

● Convex knob of 1 mm , Gull wing

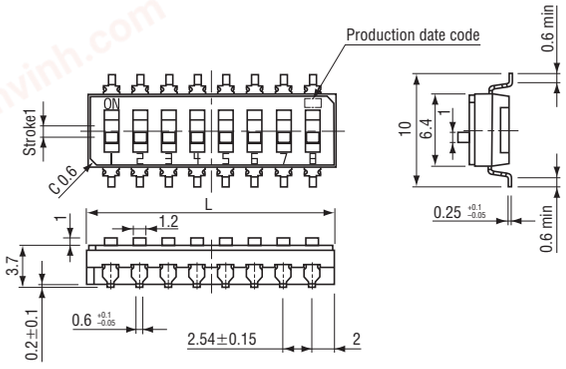

Part number	Schematic	No. of bits.	L dimension
CFS-01		1	3.95
CFS-02		2	6.5
CFS-03		3	9.05
CFS-04		4	11.6
CFS-05		5	14.15

● Convex knob of 1 mm , Through hole pin

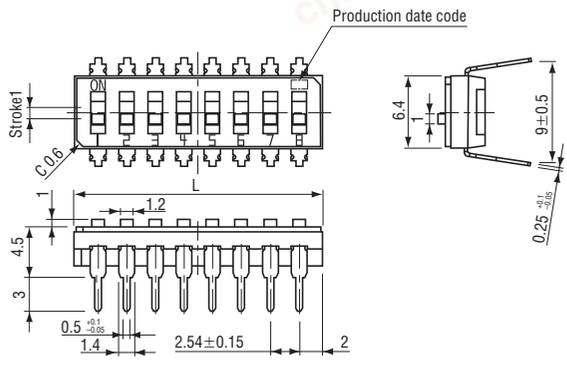

Part number	Schematic	No. of bits.	L dimension
CFS-06		6	16.7
CFS-07		7	19.25
CFS-08		8	21.8
CFS-09		9	24.35
CFS-10		10	26.9

■ RECOMMENDED P.C.B. PAD DIMENSIONS

(Unit : mm)

● CFS-01□□A ● CFS-□□□□A

P : No. of bits

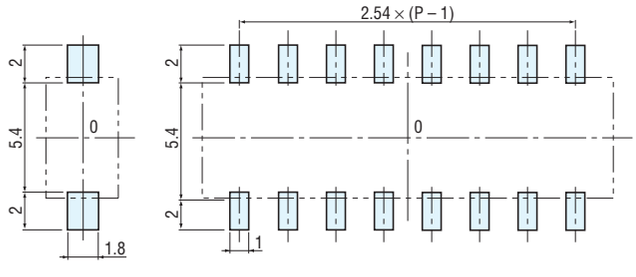

● CFS-01□□B ● CFS-□□□□B

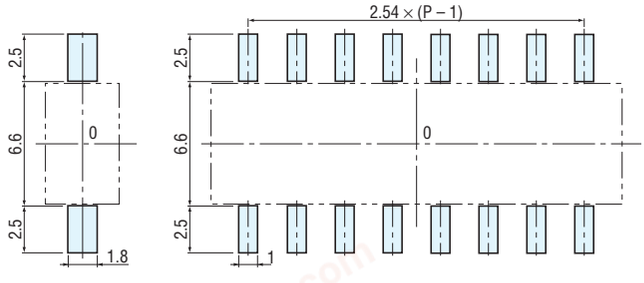

■ SIZE OF P.C.B. PROCESSING

(Unit : mm)

● CFS-□□□□C

P : No. of bits

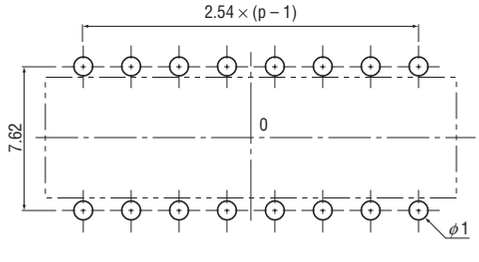

chanhvinh.com

CFS
SLIDE SWITCHES (FULL PITCH)

■ PACKAGING SPECIFICATIONS

<Taping packaging specifications>

● Taping version is packaged in 1000 pcs. (Flat knob) or 800 pcs. (Convex knob) per reel. Orders will be accepted for units of 1000 or 800 pcs., i.e., 1000, 2000, 3000 pcs., or 800, 1600, 2400 pcs., etc.

● Taping version is boxed with 1 reel.

Maximum number of consecutive missing pieces = 2
Leader length and reel dimension are shown in the diagrams below:

● Embossed tape dimensions

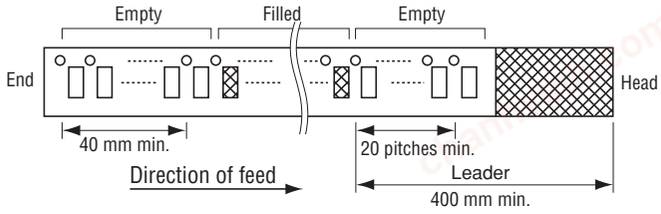

● Reel dimensions

(Conforms to JIS C 0806-3)
(In accordance with EIAJ ET-7200A)

(Unit: mm)

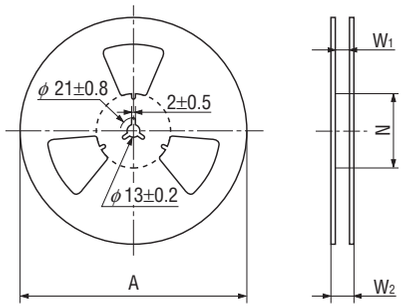

Flat knob				
No. of bits	A	W_1	W_2	N
1, 2, 3, 4, 5, 6	φ 330 ± 2	25.4 ± 1	29.4 ± 1	φ 80 ± 1
7, 8		33.4 ± 1	37.4 ± 1	
9, 10		45.4 ± 1	49.4 ± 1	

Convex knob				
No. of bits	A	W_1	W_2	N
1, 2, 3, 4, 5, 6	φ 330 ± 2	25.4 ± 1	29.4 ± 1	φ 80 ± 1
7		33.4 ± 1	37.4 ± 1	
8, 9, 10		45.4 ± 1	49.4 ± 1	

chanhvinh.com

CFS
SLIDE SWITCHES (FULL PITCH)

● Flat knob

1, 2, 3, 4, 5, 6 bits

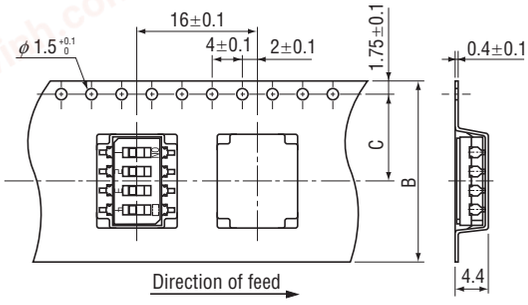

7, 8, 9, 10 bits

(Unit : mm)

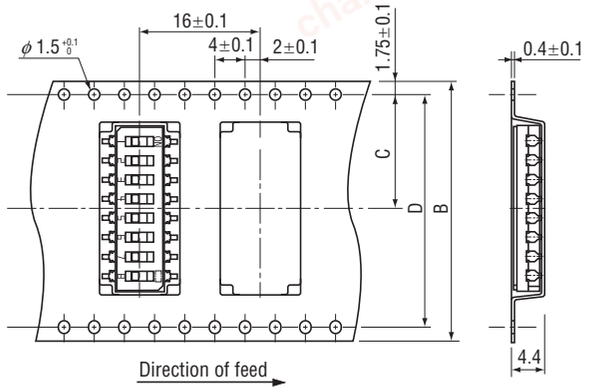

極数 No. of bits	B	C	D
1, 2, 3, 4, 5, 6	24	11.5 ± 0.1	———
7, 8	32	14.2 ± 0.1	28.4 ± 0.1
9, 10	44	20.2 ± 0.1	40.4 ± 0.1

● Convex knob

1, 2, 3, 4, 5, 6 bits

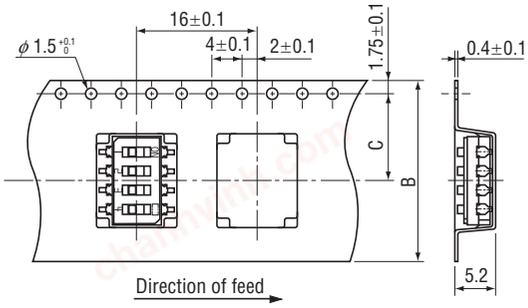

7, 8, 9, 10 bits

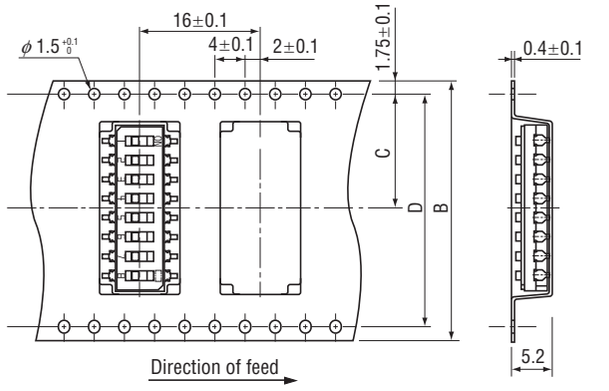

No. of bits	B	C	D
1, 2, 3, 4, 5, 6	24	11.5 ± 0.1	———
7	32	14.2 ± 0.1	28.4 ± 0.1
8, 9, 10	44	20.2 ± 0.1	40.4 ± 0.1

<Magazine packaging specifications>

● Packing quantities of magazines are different depending on the bit number of the switches.
Please order the multiple numbers of the specific packing quantities.
(e.g. 40 pcs., 80 pcs., 120 pcs., etc., in case of 4 bits version)

Pieces in package : 1 bit, 118 pcs./stick
2 bits, 72 pcs./stick
3 bits, 52 pcs./stick
4 bits, 40 pcs./stick
5 bits, 32 pcs./stick
6 bits, 28 pcs./stick
7 bits, 24 pcs./stick
8 bits, 20 pcs./stick
9 bits, 18 pcs./stick
10 bits, 16 pcs./stick