chanhvinh.com

SURFACE MOUNT CERMET TRIMMERS SM-3/31

RoHS compliant



INTERNAL STRUCTURE

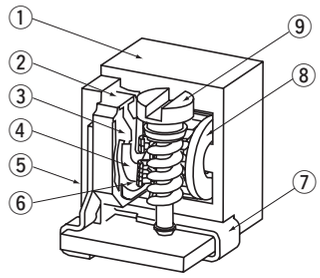

	Part name	Material	Flammability
①	Housing	Polyphenylenesulphide	UL94V-0
②	Base element	Ceramic	—
③	Electrode	Ag-Pd cermet	
④	Resistive element	RuO_2 cermet	
⑤	Adhesive	Epoxy	
⑥	Wiper	Multi metal alloy	
⑦	Terminal pin	Copper alloy, Sn-Cu-plated	
⑧	Rotor gear	Polyamide	UL94V-0
⑨	Shaft	Brass, Nickel-plated	—

FEATURES

- RoHS compliant
- Fine adjustment is possible
- Automatic mounting is possible (Taping)
- Reflow soldering is possible
- Sealed construction (Washable: Refer to page 698.)

PART NUMBER DESIGNATION

S M - 3 □ T W 1 k Ω (1 0 2)

- Series name
- Electrical turn
  - Blank : 11 turns
  - 1 : 5 turns
- Form of packaging
  - T : Taping (Reel)
  - Blank : Bulk in plastic bag
- Product shape (Shape of terminal)
  - A, W : J-hook
  - B : Gull wing
- Resistance value
- Resistance code

※ Please refer to the LIST OF PART NUMBERS when placing orders.

chanhvinh.com

SM-3/31
SURFACE MOUNT TRIMMERS

■ LIST OF PART NUMBERS

Electrical turns	Adjustment position	Shape of terminal	Form of packaging	
			Taping (reel)	Plastic bag
11	Top adjustment	W (J-hook)	SM-3TW	SM-3W
	Side adjustment	A (J-hook)	SM-3TA	SM-3A
		B (Gull wing)	SM-3TB	SM-3B
5	Top adjustment	W (J-hook)	SM-31TW	SM-31W
	Side adjustment	A (J-hook)	SM-31TA	SM-31A
		B (Gull wing)	SM-31TB	SM-31B
Pieces in package			500 pcs./reel	50 pcs./pack

〈Nominal resistance values〉

50 Ω	100 Ω	200 Ω	500 Ω	1 k Ω	2 k Ω	5 k Ω	10 k Ω
20 kΩ	50 kΩ	100 kΩ	200 kΩ	500 kΩ	1 MΩ	2 MΩ	

Fig. 1

※ The above part numbers are all available with the respective combination of <Nominal resistance values> (Fig. 1).
※ Verify the above part numbers when placing orders.
※ Taping specification is not sold separately and must be purchased in reel units.

■ ELECTRICAL CHARACTERISTICS

Nominal resistance range	50 Ω ~ 2 M Ω
Resistance tolerance	± 20 %
Power ratings	0.125 W (70 °C) 0 W (150 °C)
Resistance law	(B) Linear law
Maximum input voltage	DC200 V or power rating, whichever is smaller
Maximum wiper current	100 mA or power rating, whichever is smaller
Effective electrical turn	11 turns (SM-3) / 5 turns (SM-31)
End resistance	1 % or 3 Ω , whichever is greater
C.R.V.	3 % or 3 Ω , whichever is greater
Operating temp. range	− 65 ~ 150 °C
Temp. coefficient	± 100 10^{-6}/°C maximum
Insulation resistance	100 M Ω minimum (DC500 V)
Dielectric strength	AC600 V, 60 s
Net weight	Approx. 0.10 g

〈Reflow profile for soldering heat evaluation〉

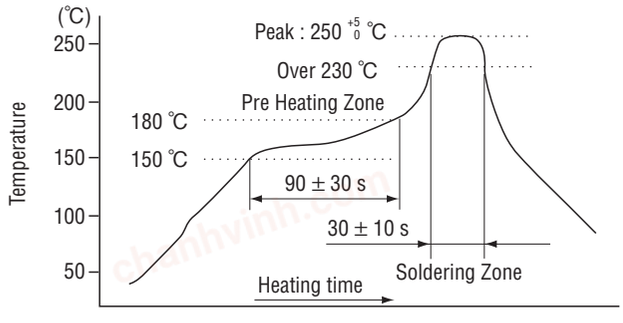

Reflow : two times maximum

■ MECHANICAL CHARACTERISTICS

Operating torque	5 mN·m {51 gf·cm} maximum
Mechanical stop	Clutch action
Rotational life	200 cycles [Δ R/R ≦ ± (2 Ω +3 %)]
Thrust to shaft	5 N {0.51 kgf} minimum
Solderability	245 ± 3 °C, 2 ~ 3 s
Shear (Adhesion)	5 N {0.51 kgf} 10 s
Substrate bending	Width 90 mm, bend 3 mm, 5 s, 1 time
Pull-off strength	5 N {0.51 kgf} 10 s

{ } : Reference only

■ ENVIRONMENTAL CHARACTERISTICS

Test item	Test conditions	Specifications
Thermal shock	− 65 ~ 150 °C (0.5 h), 5 cycles	[Δ R/R ≦ 2 %] [S.S. ≦ 2 %]
Humidity	− 10 ~ 65 °C (80 ~ 98 %), 10 cycles, 240 h	[Δ R/R ≦ 3 %]
Shock	981 m/s², 6 ms 6 directions for 3 times each	[Δ R/R ≦ 1 %] [S.S. ≦ 1 %]
Vibration	(Amplitude) 1.52 mm or (Acceleration) 196 m/s², 10 ~ 2000 Hz, 3 directions, 12 times each	
Load life	70 °C, 0.125 W, 1000 h	[Δ R/R ≦ 3 %] [S.S. ≦ 2 %]
Low temp. operation	− 65 °C, 2 h	[Δ R/R ≦ 2 %] [S.S. ≦ 2 %]
High temp. exposure	150 °C, 250 h	[Δ R/R ≦ 3 %] [S.S. ≦ 2 %]
Immersion seal	85 °C, 60 s	No leaks (No continuous bubbles)
Soldering heat	Reflow : Peak temperature 255 °C (Please refer to the profile below.) Manual soldering : 350 ± 10 °C, 3 ~ 4 s	[Δ R/R ≦ 1 %]

Δ R/R : Change in total resistance
S.S. : Setting stability

chanhvinh.com

SM-3/31
SURFACE MOUNT TRIMMERS

■ MAXIMUM INPUT RATINGS

Nominal resistance values (Ω)	Resistance code	Maximum input voltage (V)	Maximum wiper current (mA)
50	500	2.50	50.0
100	101	3.53	35.4
200	201	5.00	25.0
500	501	7.91	15.8
1 k	102	11.2	11.2
2 k	202	15.8	7.91
5 k	502	25.0	5.00
10 k	103	35.4	3.54
20 k	203	50.0	2.50
50 k	503	79.1	1.58
100 k	104	112	1.12
200 k	204	158	0.79
500 k	504	200	0.40
1 M	105	200	0.20
2 M	205	200	0.10

■ RECOMMENDED P.C.B. PAD OUTLINE DIMENSIONS

(Unit : mm)

● SM-3W/31W

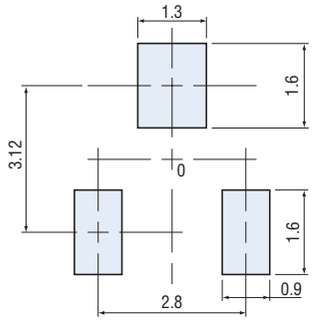

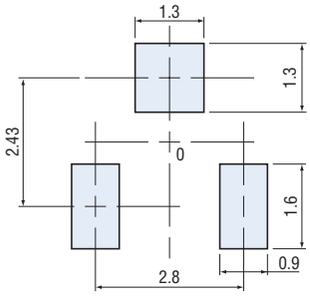

※ Also available to place as the above.

● SM-3A/31A

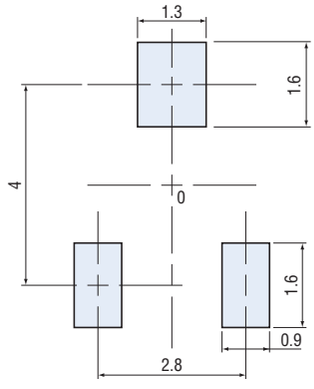

● SM-3B/31B

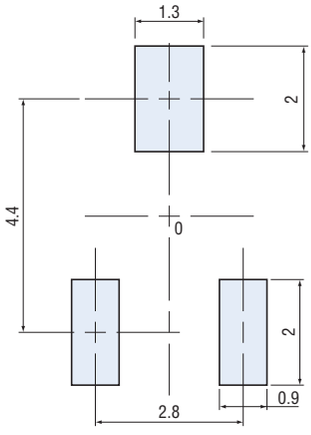

Note) The zero point is the center of mounting.

■ OUTLINE DIMENSIONS

Unless otherwise specified, tolerance : ± 0.3 (Unit : mm)

● SM-3W/31W
Top adjustment

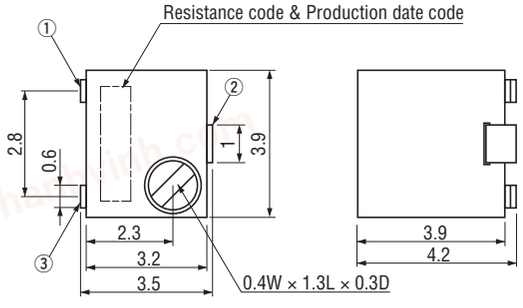

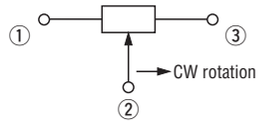

※ Note the terminal position.

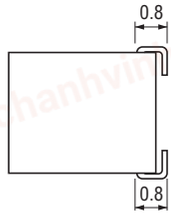

chanhvinh.com

SM-3/31
SURFACE MOUNT TRIMMERS

■ OUTLINE DIMENSIONS

Unless otherwise specified, tolerance : ± 0.3 (Unit : mm)

● SM-3A/31A
Side adjustment

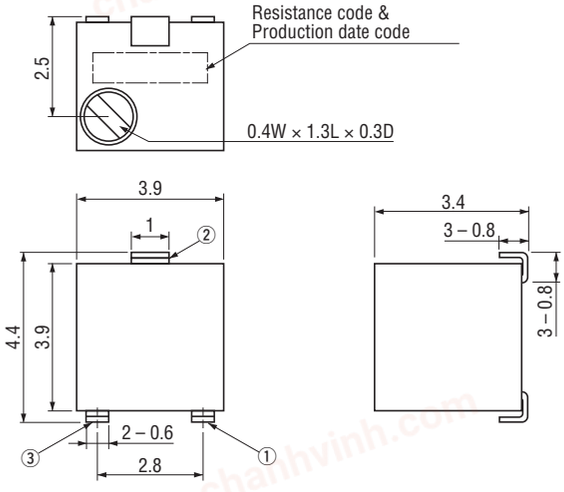

● SM-3B/31B
Side adjustment

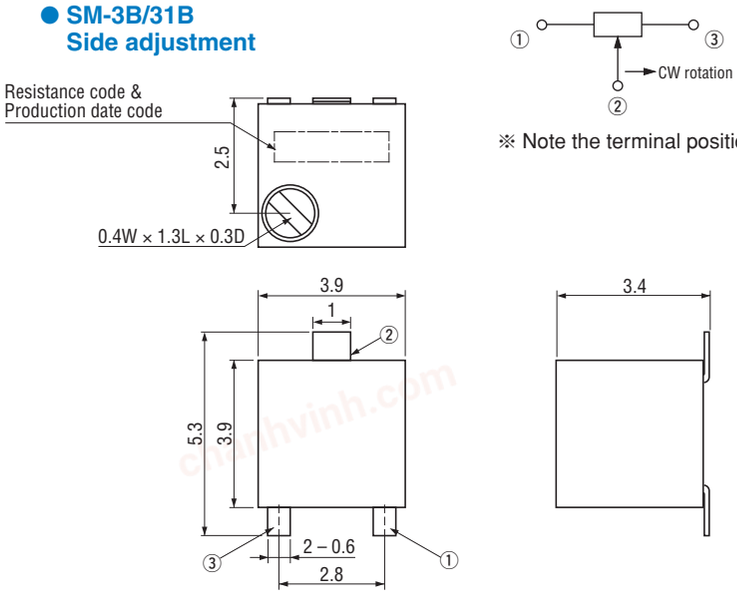

※ Note the terminal position.

■ PACKAGING SPECIFICATIONS

<Taping packaging specifications>

- Taping version is packaged in 500 pcs. per reel. Orders will be accepted for units of 500 pcs., i.e., 500, 1000, 1500 pcs., etc.
- Taping version is boxed with one reel.

Maximum number of consecutive missing pieces = 2
Leader length and reel dimension are shown in the diagrams below.

● EMBOSSED TAPE DIMENSIONS

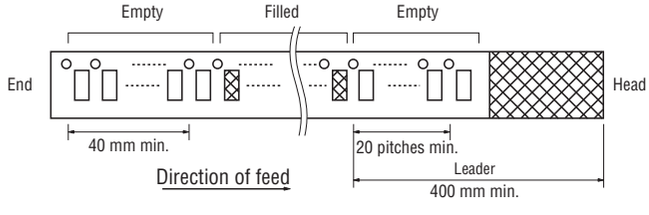

● REEL DIMENSIONS

(Conforms to JIS C 0806-3)
(In accordance with EIAJ ET-7200A)

(Unit: mm)

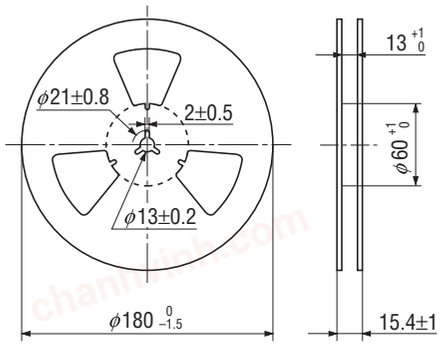

chanhvinh.com

SM-3/31
SURFACE MOUNT TRIMMERS

● SM-3TW/31TW

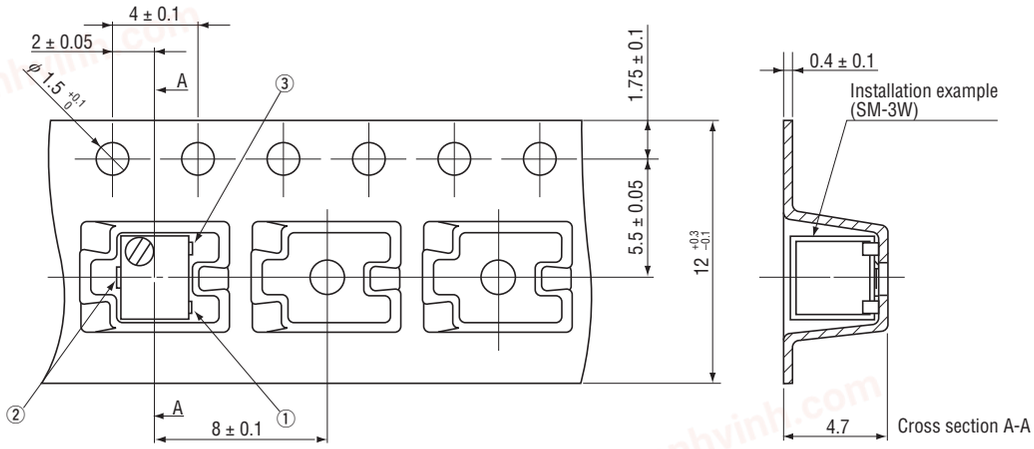

● SM-3TA/31TA

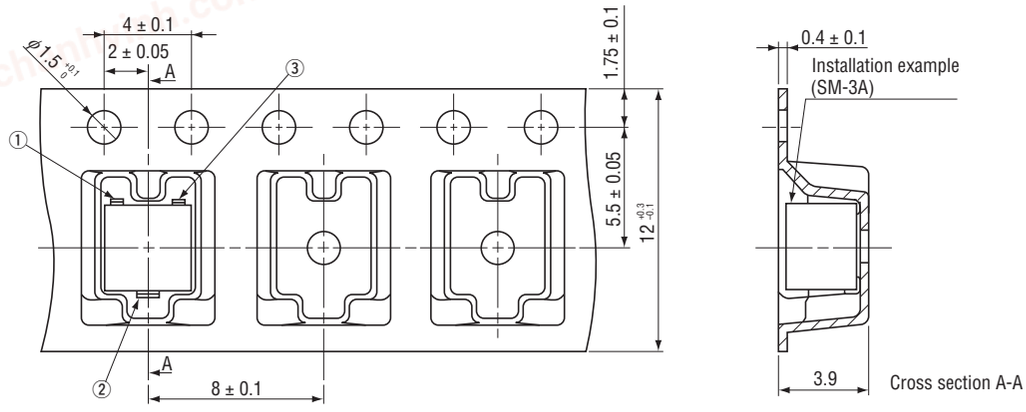

● SM-3TB/31TB

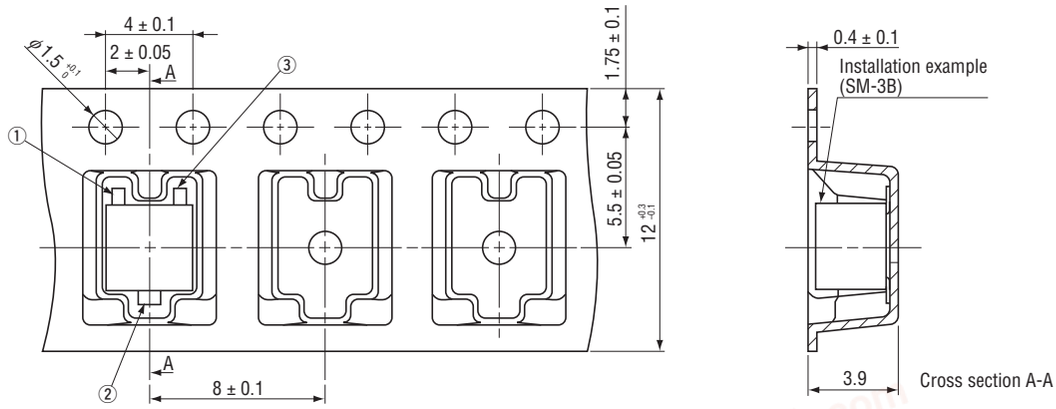

<Bulk pack specifications>

- Unit of bulk in a plastic bag is 50 pcs. per pack.
- Boxing of bulk in a plastic bag is performed with 200 pcs. per box.