chanhvinh.com

SLE210K

Miniature Power Rocker Switches

Dust Proof

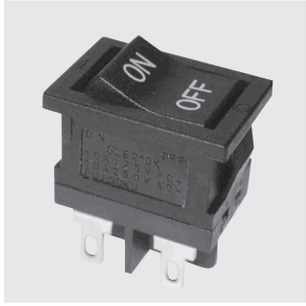

C-US UL | VDE | SEMKO

RoHS Compliant

■Features

1. **C-US UL , VDE** and **SEMKO** approved products
2. Snap-in panel mounting
3. Compact size is suited for space-saving design.
4. Best suited for power supply of equipment.
5. Dust-proof type
6. 100 A rush current type.
7. Breaking distance is 3 mm or over.

■Specifications

Rating	Load	Inductive load				Resistive load
	Inrush current (p.f.=0.6)	125VAC		250VAC		10A 125VAC 10A 250VAC (p.f.=1.0)
		100A	60A	100A	60A	
	Break current (p.f.=0.9)	10A	10A	10A	10A	
	Min.	10mA 5VAC/DC (Resistive load)				
	C-ULUS	6A 125VAC･6A 250VAC (Resistive load)				
Initial contact resistance		20mΩ max. (1A 1～2VDC)				
Initial dielectric strength		1500VAC 1 minute				
Initial insulation resistance		100MΩ min (500VDC)				
Electrical life (cycles)		5,000	10,000	5,000	10,000	10,000
Operating force		3.92～12.7N				
Operating temperature range		−25～+85℃				
Strage temperature range		−40～+85℃				

■Part Numbering

SLE 2 10 K 2 − 5

- SLE — Series code
- 2 — Poles: 2 = 2-poles
- 10 — Current: 10 = 10A
- K — Switching function: K = ON−ON
- 2 — Terminal style:

	Solder terminal
2	TAB#187 (t=0.8)
4	R/A
9	L/A
11	VM

- 5 — Rocker design:

	
5	
6	
7	
9	

★ [ ] : The combination marked in blue brackets shows made-to-order products.

■Marking Color

Frame color・Rocker color	Making color
Black	White

The black color is standard for the frame and the rocker.
The gray and the ivory colors are also available as custom-made items.

■Handling Precautions

1. Soldering Specifications

(1)Manual Soldering

Device : Soldering iron

380℃, Max.; 5 seconds, Max.

※The tab terminals cannot be soldered.

chanhvinh.com

■Table of Part Numbers

Frame color and rocker color	Marking color	Switching function	Terminal styles	Part number and rating marking side				
Black	White	ON—OFF	Solder terminal	☆SLE210K	★SLE210K-5	SLE210K-6	★SLE210K-7	SLE210K-9
			#187 TAB	SLE210K2	SLE210K2-5	SLE210K2-6	SLE210K2-7	SLE210K2-9
			Right-angle	★SLE210K4	——	☆SLE210K4-6	★SLE210K4-7	——
			Left-angle	——	★SLE210K9-5	——	★SLE210K9-7	★SLE210K9-9
			Vertical mounting	——	——	★SLE210K11-6	——	——

●For custom-made products, we accept orders for indication of letters, codes, etc., on the top surface of rocker.

Solder terminal



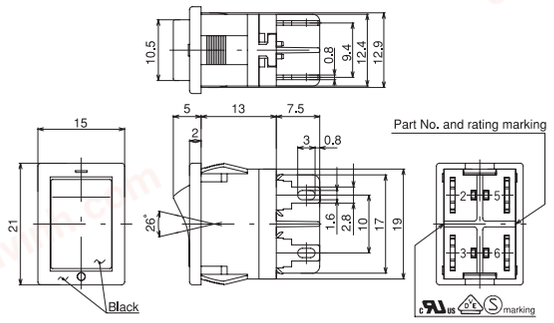

Part No. \ Switching function	Viewed from part No. & rating marking side	
SLE210K	ON	OFF
Connecting terminals	2— 3 5— 6	—

TAB#187 Terminal (t=0.8)

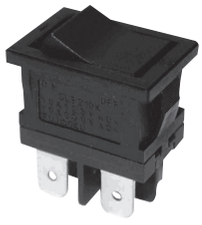

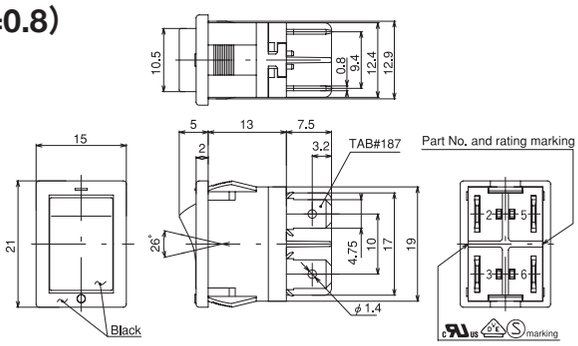

Right Angle Terminal



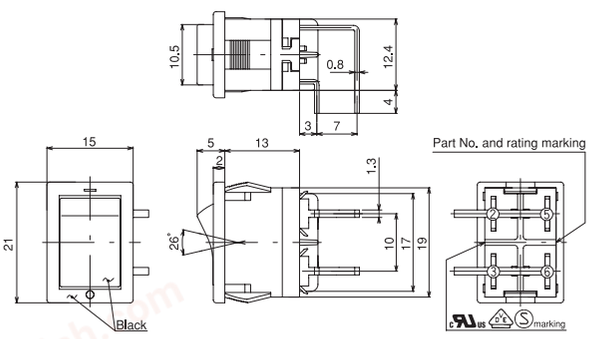

■PC Hole Layouts (Top view)

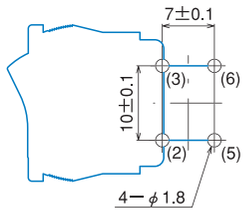

The blue lines show the outline of the switch.

Left Angle Terminal

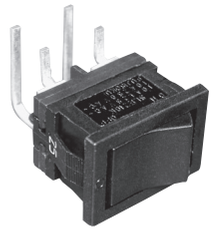

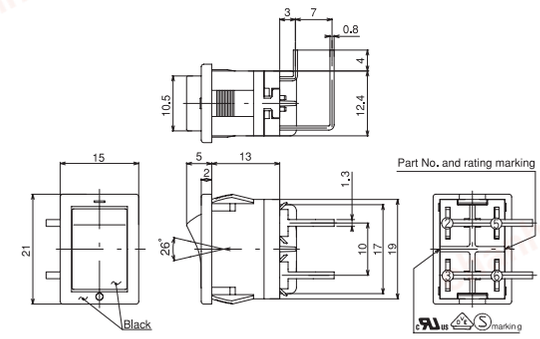

■PC Hole Layouts (Top view)

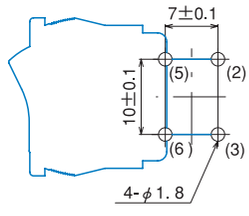

The blue lines show the outline of the switch.

▲ : Inquiry products. ☆ : Semi-standard products. ★ : Made to order products. ●Terminal numbers are shown on the bottom of the switch.

chanhvinh.com

SLE210K

Vertical Mounting Terminal

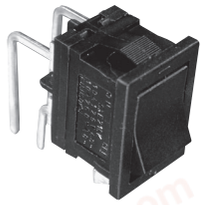

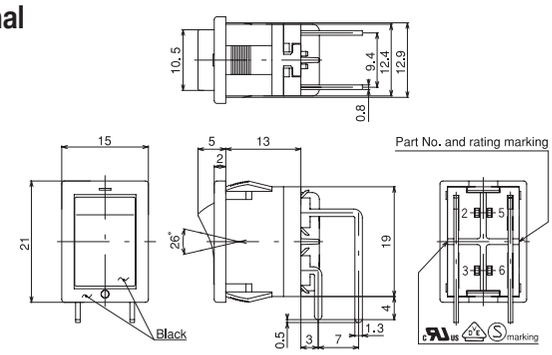

■PC Hole Layouts（Top view）

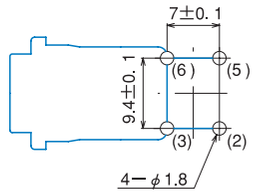

The blue lines show the outline of the switch.

Switch Guard

Dedicated for use of rocker switches



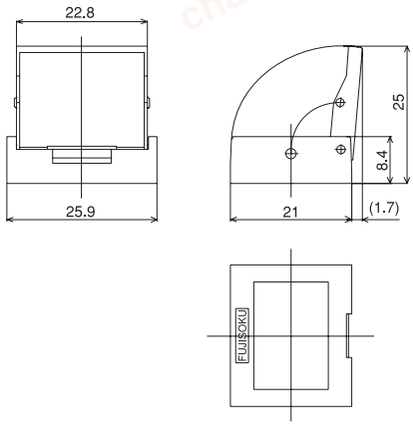

■Features

Clear visibility and one-touch mounting to save labor

■Application

Best suited for protection of malfunction of miniature rocker switches（panel cutout: 19.2 x 12.9）

■Specifications

Part Name: Switch guard
Part Number: 140007250027
Color: Black（transparent cover）

An application switch	●SLE6	●SLE10
	●SL10K	●SLE210K

※The switch guard cannot be used for the SLE10K type.

■Approvals

UL File No.E43275
VDE License No. 40000090
SEMKO File No. 1312457

■Packaging Specification

Perforated Plastic Bags 25 pcs/pack

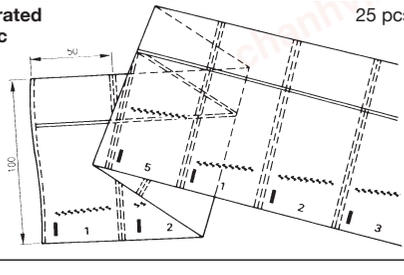

■Panel Cut-Out Dimensions

Switchs

Panel thickness	X
0.75～1.25	19.2
1.25～2.0	19.4
2.0～3.0	19.8

Switch Guard Installation

Panel thickness	X
0.75～1.4	19.4
1.4～2.3	19.8

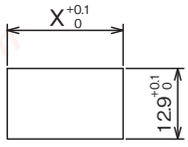

■PRECAUTIONS FOR PANEL MOUNTING

Page ····· 310