chanhvinh.com

SURFACE MOUNT CERMET TRIMMERS SM-42/43

RoHS compliant

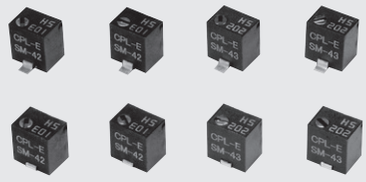

INTERNAL STRUCTURE

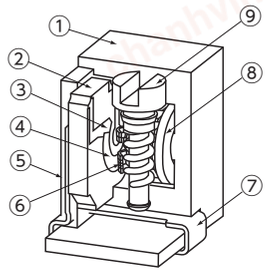

	Part name	Material
①	Housing	Polyphenylenesulphide
②	Base element	Ceramic
③	Electrode	Ag-Pd cermet
④	Resistive element	RuO_2 cermet
⑤	Adhesive	Epoxy
⑥	Wiper	Multi metal alloy
⑦	Terminal pin	Copper alloy, Sn-Cu-plated
⑧	Rotor gear	Polyamide
⑨	Shaft	Brass, Nickel-plated

FEATURES

- RoHS compliant
- Fine adjustment is possible
- Automatic mounting is possible (Taping)
- Reflow soldering is possible
- Sealed construction (Washable: Refer to page 698.)
- Resin material is UL Recognized 94V-0

PART NUMBER DESIGNATION

S M - 4 □ T W 1 0 0Ω (1 0 1)

- Series name
- Electrical turn
  - 2：11 turns
  - 3：5 turns
- Form of packaging
  - T：Taping (Reel)
  - Blank：Bulk in plastic bag
- Product shape (Shape of terminal)
  - A：J-hook (Side adjustment)
  - B：Gull wing(Side adjustment)
  - W：J-hook (Top adjustment)
  - X：Gull wing (Top adjustment)
- Resistance value
- Resistance code

※ Please refer to the LIST OF PART NUMBERS when placing orders.

chanhvinh.com

SM-42/43
SURFACE MOUNT TRIMMERS

LIST OF PART NUMBERS

Electrical turn	Adjustment position	Shape of terminal	Form of packaging	
			Taping (reel)	Plastic bag
11	Top adjustment	W (J-hook)	SM-42TW	SM-42W
		X (Gull wing)	SM-42TX	SM-42X
	Side adjustment	A (J-hook)	SM-42TA	SM-42A
		B (Gull wing)	SM-42TB	SM-42B
5	Top adjustment	W (J-hook)	SM-43TW	SM-43W
		X (Gull wing)	SM-43TX	SM-43X
	Side adjustment	A (J-hook)	SM-43TA	SM-43A
		B (Gull wing)	SM-43TB	SM-43B
Pieces in package			TA, TB : 500 pcs./reel TW, TX : 250 pcs./reel	50 pcs./pack

〈Nominal resistance values〉

⊖10 Ω	⊖ 20 Ω	50 Ω	100 Ω	200 Ω	500 Ω	1 kΩ	2 kΩ	5 kΩ
10 kΩ	20 kΩ	50 kΩ	100 kΩ	200 kΩ	500 kΩ	1 MΩ	2 MΩ	

Fig. 1

The products indicated by ⊖ mark are manufactured upon receipt of order basis.

※ The above part numbers are all available with the respective combination of <Nominal resistance values> (Fig. 1).
※ Verify the above part numbers when placing orders.
※ Taping specification is not sold separately and must be purchased in reel units.

ELECTRICAL CHARACTERISTICS

Nominal resistance range	10 Ω ~ 2 MΩ
Resistance tolerance	± 10 %
Power ratings	0.25 W (85 °C) 0 W (150 °C)
Resistance law	Linear law
Maximum input voltage	DC300 V or power rating, whichever is smaller
Maximum wiper current	100 mA or power rating, whichever is smaller
Effective electrical turn	11 turns (SM-42), 5 turns (SM-43)
End resistance	1 % or 2 Ω, whichever is greater
C.R.V.	1 % or 3 Ω, whichever is greater
Operating temp. range	− 65 ~ 150 °C
Temp. coefficient	± 100 10^{-6}/°C maximum
Insulation resistance	100 MΩ minimum (DC500 V)
Dielectric strength	AC600 V, 60 s
Net weight	Approx. 0.17 g

〈Reflow profile for soldering heat evaluation〉

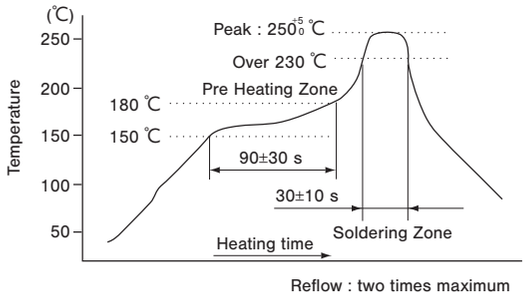

Reflow : two times maximum

MECHANICAL CHARACTERISTICS

Operating torque	17.6 mN·m {180 gf·cm} maximum
Mechanical stop	Clutch action
Rotational life	200 cycles [Δ R/R ≦ ± (3 Ω +3 %)]
Thrust to shaft	5 N {0.51 kgf} minimum
Solderability	245 ± 3 °C, 2 ~ 3 s
Shear (Adhesion)	5 N {0.51 kgf} 10 s
Substrate bending	Width 90 mm, bend 3 mm, 5 s, 1 time
Pull-off strength	5 N {0.51 kgf} 10 s

{ } : Reference only

ENVIRONMENTAL CHARACTERISTICS

Test item	Test conditions	Specifications
Thermal shock	− 65 ~ 150 °C (0.5 h), 5 cycles	[Δ R/R ≦ 2 %] [S.S. ≦ 1 %]
Humidity	− 10 ~ 65 °C (80 ~ 98 %), 10 cycles, 240 h	[Δ R/R ≦ 2 %]
Shock	981 m/s², 6 ms 6 directions for 3 times each	[Δ R/R ≦ 1 %] [S.S. ≦ 1 %]
Vibration	(Amplitude) 1.52 mm or (Acceleration) 196 m/s², 10 ~ 2000 Hz, 3 directions, 12 times each	
Load life	85 °C, 0.25 W, 1000 h	[Δ R/R ≦ 3 % or 3 Ω] [S.S. ≦ 2 %]
Low temp. operation	− 65 °C, 2 h	[Δ R/R ≦ 1 %] [S.S. ≦ 1 %]
High temp. exposure	150 °C, 250 h	[Δ R/R ≦ 2 %] [S.S. ≦ 1 %]
Immersion seal	85 °C, 60 s	No leaks (No continuous bubbles)
Soldering heat	Reflow : Peak temperature 255 °C (Please refer to the profile below.) Manual soldering : 350 ± 10 °C, 3 ~ 4 s	[Δ R/R ≦ 1 %]

Δ R/R : Change in total resistance
S.S. : Setting stability

chanhvinh.com

SM-42/43
SURFACE MOUNT TRIMMERS

MAXIMUM INPUT RATINGS

Nominal resistance values (Ω)	Resistance code	Maximum input voltage (V)	Maximum wiper current (mA)
⊖ 10	100	1.00	100
⊖ 20	200	2.00	100
50	500	3.53	70.7
100	101	5.00	50.0
200	201	7.07	35.4
500	501	11.2	22.4
1 k	102	15.8	15.8
2 k	202	22.4	11.2
5 k	502	35.4	7.07
10 k	103	50.0	5.00
20 k	203	70.7	3.54
50 k	503	112	2.24
100 k	104	158	1.58
200 k	204	223	1.12
500 k	504	300	0.60
1 M	105	300	0.30
2 M	205	300	0.15

The products indicated by ⊖ mark are manufactured upon receipt of order basis.

RECOMMENDED P.C.B. PAD OUTLINE DIMENSIONS

(Unit: mm)

SM-42/43A

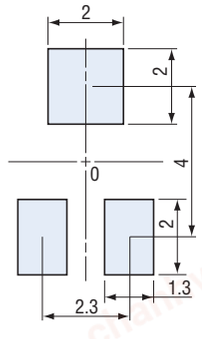

SM-42/43B

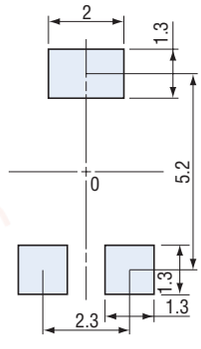

SM-42/43W

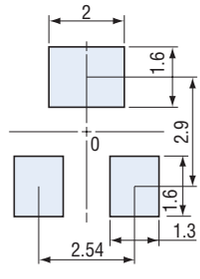

SM-42/43X

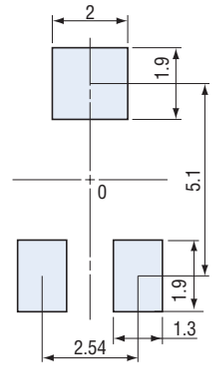

Note) The zero point is the center of mounting.

chanhvinh.com

SM-42/43
SURFACE MOUNT TRIMMERS

OUTLINE DIMENSIONS

Unless otherwise specified, tolerance : ± 0.3 (Unit : mm)

SM-42/43W

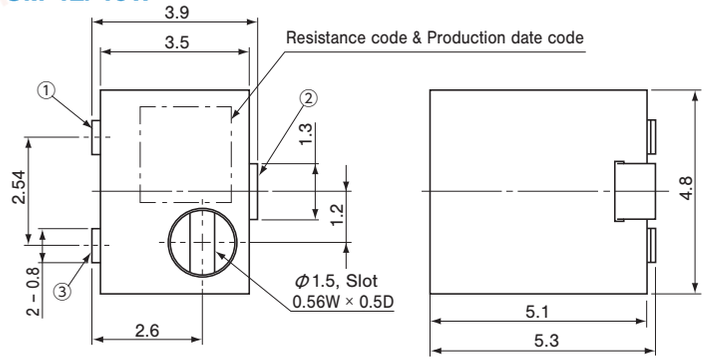

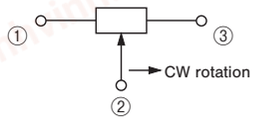

Note the terminal position.

SM-42/43X

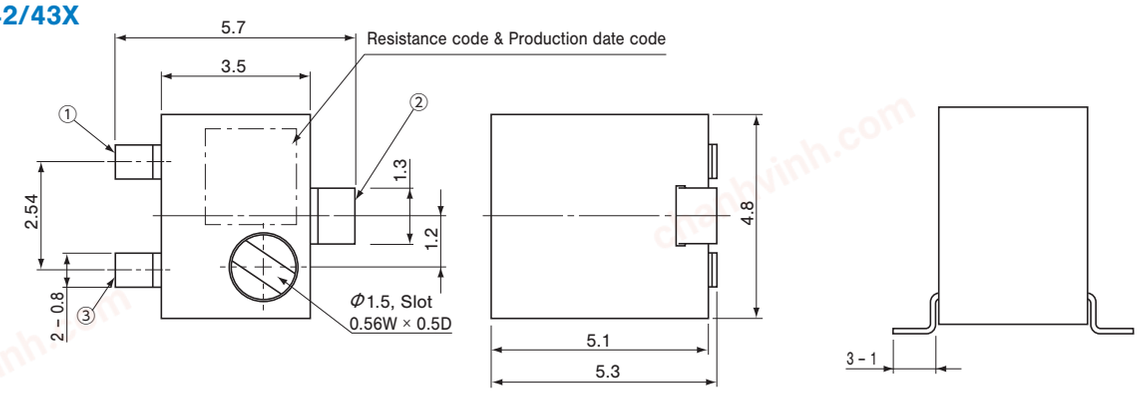

SM-42/43A

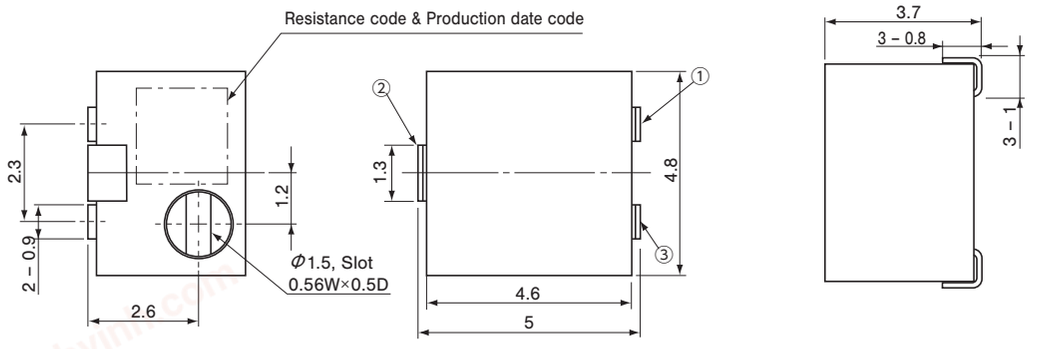

SM-42/43B

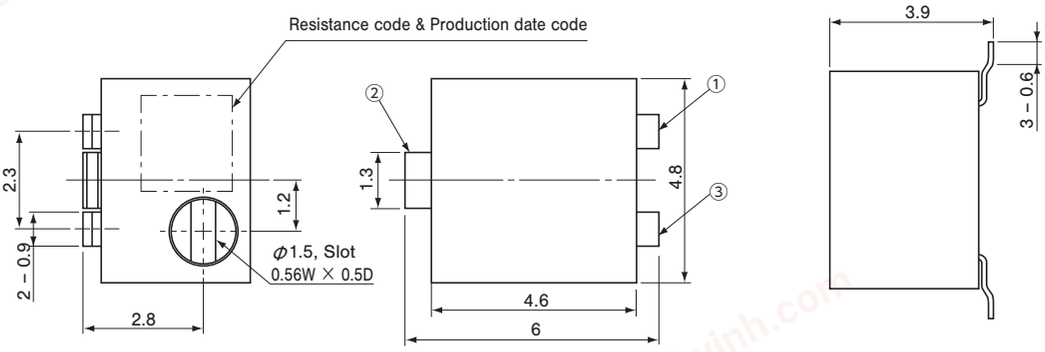

chanhvinh.com

SM-42/43
SURFACE MOUNT TRIMMERS

PACKAGING SPECIFICATIONS

<Taping packaging specifications>

- Taping version (SM-42/43TA, TB) is packaged in 500 pcs. per reel.
  Orders will be accepted for units of 500 pcs., i.e., 500, 1000, 1500 pcs., etc.
  SM-42/43TW, TX is packaged in 250 pcs. per reel.
  Orders will be accepted for units of 250 pcs., i.e., 500, 750 pcs., etc.

  Maximum number of consecutive missing pieces = 2
  Leader length and reel dimension are shown in the dia-grams below.

EMBOSSED TAPE DIMENSIONS

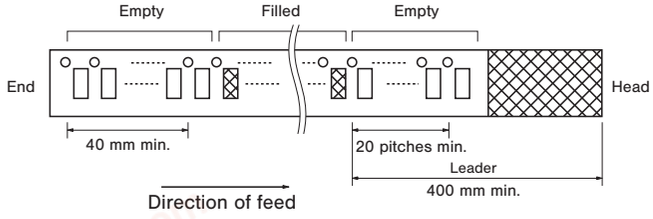

REEL DIMENSIONS

(Conforms to JIS C 0806-3)
(TA/TB type : In accordance with EIAJ ET-7200A)

(Unit: mm)

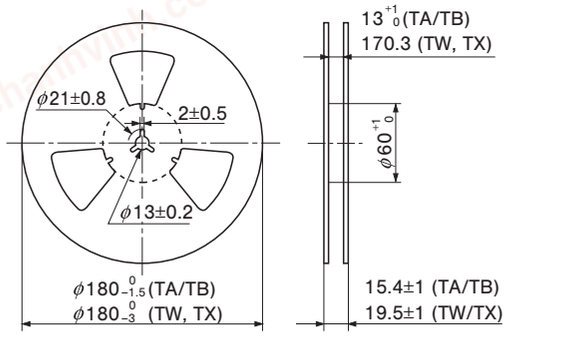

SM-42/43TW/TX

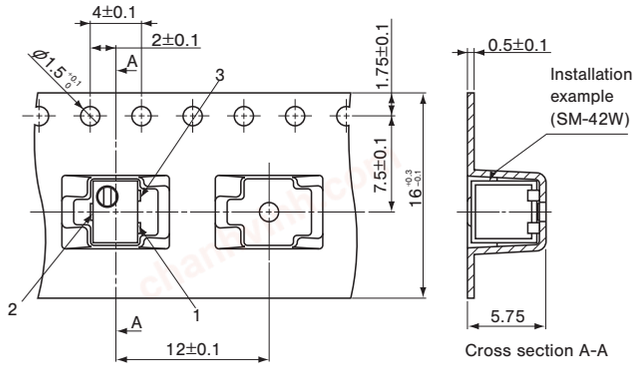

SM-42/43TA/TB

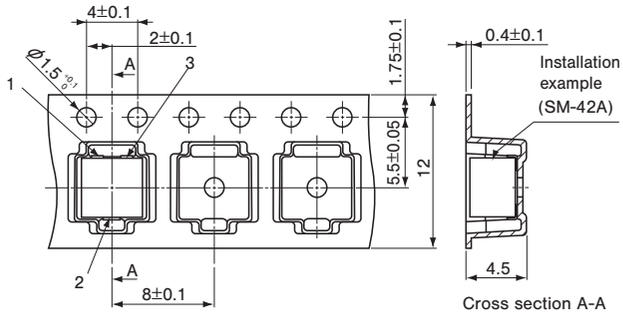

<Bulk pack specifications>

- Unit of bulk in a plastic bag is 50 pcs. per pack.
- Boxing of bulk in a plastic bag is performed with 200 pcs. per box.