chanhvinh.com

SURFACE MOUNT CERMET TRIMMERS (14 TURNS) ST-5

RoHS compliant

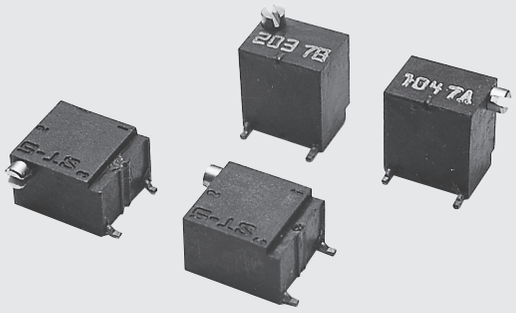

FEATURES

- RoHS compliant
- Precise adjustment is possible
- Automatic mounting is possible (Taping)
- Flow/reflow soldering is possible
- Sealed construction (Washable: Refer to page 628.)
- Resin material is UL Recognized 94V-0

INTERNAL STRUCTURE

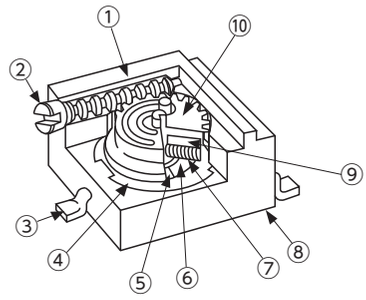

	Part name	Material
①	Housing	PPS (Polyphenylenesulphide)
②	Shaft	Brass, Nickel-plated
③	Terminal pin	Copper, Tin-plated
④	Base element	Ceramic
⑤	Electrode	Ag-Pd cermet
⑥	Resistive element	RuO_2 cermet
⑦	Wiper	Multi metal alloy
⑧	Adhesive	Epoxy
⑨	Rubber cushion	Silicone rubber
⑩	Rotor gear	PA (Polyamide)

PART NUMBER DESIGNATION

S T - 5 E T W 5 0 0 Ω (5 0 1)

- Series name
- Terminal pin
  - E : Sn (Lead-free)
- Form of packaging
  - T : Taping (Reel)
  - M : Magazine (Stick)
  - Blank : Bulk in plastic bag
- Product shape (Shape of terminal)
  - W : Gull wing (Top adjustment)
  - X : Gull wing (Side adjustment)
  - P : Gull wing (Side adjustment)
  - R : Gull wing (Side adjustment)
- Resistance value
- Resistance code

※ Please refer to the LIST OF PART NUMBERS when placing orders.

chanhvinh.com

ST-5
SURFACE MOUNT TRIMMERS

■ LIST OF PART NUMBERS

Adjustment position	Shape of terminal	Form of packaging		
		Taping (reel)	Magazine (stick)	Plastic bag
Top adjustment	W (Gull wing)	ST-5ETW	ST-5EMW	ST-5EW
Side adjustment	X (Gull wing)	ST-5ETX	ST-5EMX	ST-5EX
	P (Gull wing)	ST-5ETP	ST-5EMP	ST-5EP
	R (Gull wing)	ST-5ETR	ST-5EMR	ST-5ER
Pieces in package		500 pcs./reel	50 pcs./stick	50 pcs./pack

The products indicated by ⊖ mark are manufactured upon receipt of order basis.

〈Nominal resistance values〉

⊖10 Ω	⊖20 Ω	50 Ω	100 Ω	200 Ω	500 Ω	1 kΩ	2 kΩ	5 kΩ
10 kΩ	20 kΩ	50 kΩ	100 kΩ	200 kΩ	500 kΩ	1 MΩ	2 MΩ	

Fig. 1

※ The above part numbers are all available with the respective combination of <Nominal resistance values> (Fig. 1).
※ Verify the above part numbers when placing orders.
※ Taping and magazine specifications are not sold separately and must be purchased in reel or stick units.

■ ELECTRICAL CHARACTERISTICS

Nominal resistance range	10 Ω ~ 2 MΩ
Resistance tolerance	± 10 %
Power ratings	0.25 W (85 °C) 0 W (120 °C)
Resistance law	Linear law(B)
Maximum input voltage	DC200 V or power rating, whichever is smaller
Maximum wiper current	100 mA or power rating, whichever is smaller
Effective electrical turn	11 turns
End resistance	1 % or 2 Ω, whichever is greater
C.R.V.	1 % or 3 Ω, whichever is greater
Operating temp. range	− 55 ~ 120 °C
Temp. coefficient	10 Ω ~ 50 Ω : ± 250 10^{-6}/°C maximum 100 Ω ~ 2 MΩ : ± 100 10^{-6}/°C maximum
Insulation resistance	1000 MΩ minimum (DC500 V)
Dielectric strength	AC600 V, 60 s
Net weight	Approx. 0.35 g

〈Reflow profile for soldering heat evaluation〉

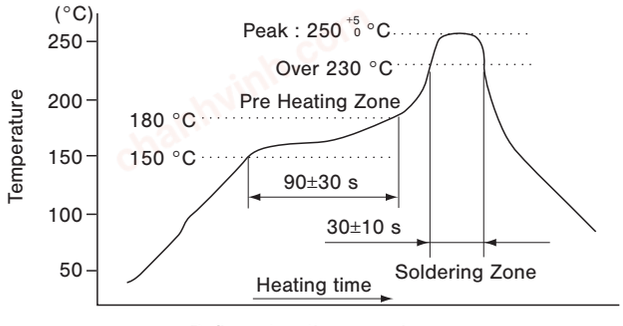

Reflow : two times maximum

■ MECHANICAL CHARACTERISTICS

Mechanical turn	14 turns
Operating torque	20 mN·m {204 gf·cm} maximum
Mechanical stop	Clutch action
Rotational life	200 cycles 10 Ω ~ 200 Ω [Δ R/R ≦ ± (0.5 Ω +3 %)] 500 Ω ~ 2 MΩ [Δ R/R ≦ ± (0.5 Ω +2 %)]
Thrust to shaft	5 N {0.51 kgf} minimum
Solderability	245 ± 3 °C, 2 ~ 3 s
Shear (Adhesion)	5 N {0.51 kgf} 10 s
Substrate bending	Width 90 mm, bend 3 mm, 5 s, 1 time
Pull-off strength	5 N {0.51 kgf} 10 s

{ } : Reference only

■ ENVIRONMENTAL CHARACTERISTICS

Test item	Test conditions	Specifications
Thermal shock	− 65 ~ 125 °C (0.5 h), 5 cycles	[Δ R/R ≦ 1 %] [S.S. ≦ 1 %]
Humidity	− 10 ~ 65 °C (Relative humidity 80 ~ 98 %), 10 cycles, 240 h	[Δ R/R ≦ 1 %]
Shock	981 m/s², 6 ms 6 directions for 3 times each	[Δ R/R ≦ 1 %] [S.S. ≦ 1 %]
Vibration	Amplitude 1.52 mm or Acceleration 196 m/s², 10 ~ 2000 Hz, 3 directions, 12 times each	
Load life	85 °C, 0.25 W, 1000 h	[Δ R/R ≦ 2 %] [S.S. ≦ 1 %]
Low temp. operation	− 55 °C, 2 h	[Δ R/R ≦ 2 %] [S.S. ≦ 2 %]
High temp. exposure	120 °C, 250 h	[Δ R/R ≦ 2 %] [S.S. ≦ 2 %]
Immersion seal	85 °C, 60 s	No leaks (No continuous bubbles)
Soldering heat	Flow : 260 ± 3 °C as the temperature in a pot of molten solder, immersion from head of terminal to backside of board, 5 ~ 6 s, two times maximum Reflow : Peak temperature 255°C (Please refer to the profile below.) Manual soldering : 350 ± 10 °C, 3 ~ 4 s	[Δ R/R ≦ 1 %]

ΔR/R : Change in total resistance
S.S. : Setting stability

chanhvinh.com

ST-5
SURFACE MOUNT TRIMMERS

MAXIMUM INPUT RATINGS

Nominal resistance values (Ω)	Resistance code	Maximum input voltage (V)	Maximum wiper current (mA)
⊖ 10	100	1.00	100
⊖ 20	200	2.00	100
50	500	3.53	70.7
100	101	5.00	50.0
200	201	7.07	35.4
500	501	11.2	22.4
1 k	102	15.8	15.8
2 k	202	22.4	11.2
5 k	502	35.4	7.07
10 k	103	50.0	5.00
20 k	203	70.7	3.54
50 k	503	112	2.24
100 k	104	158	1.58
200 k	204	200	1.00
500 k	504	200	0.40
1 M	105	200	0.20
2 M	205	200	0.10

The products indicated by ⊖ mark are manufactured upon receipt of order basis.

RECOMMENDED P.C.B. PAD OUTLINE DIMENSIONS

(Unit: mm)

ST-5EW

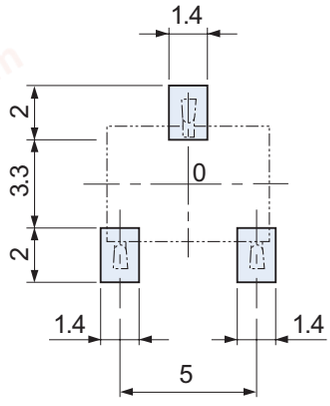

ST-5EX

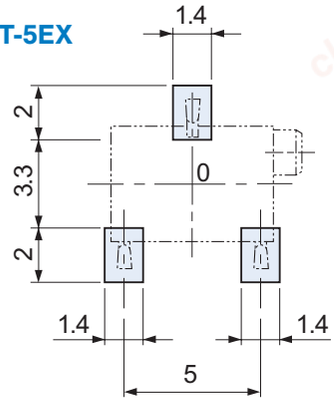

ST-5EP

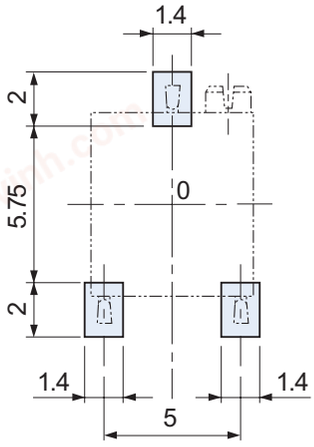

ST-5ER

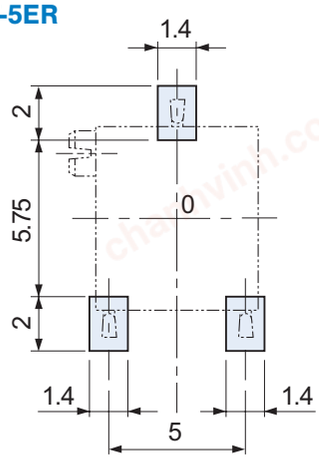

Note) The zero point is the center of mounting.

chanhvinh.com

ST-5
SURFACE MOUNT TRIMMERS

■ OUTLINE DIMENSIONS

Unless otherwise specified, tolerance : ± 0.3 (Unit: mm)

● ST-5EW
Top adjustment

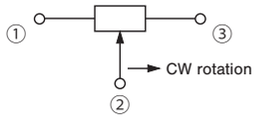

※ Note the terminal position.

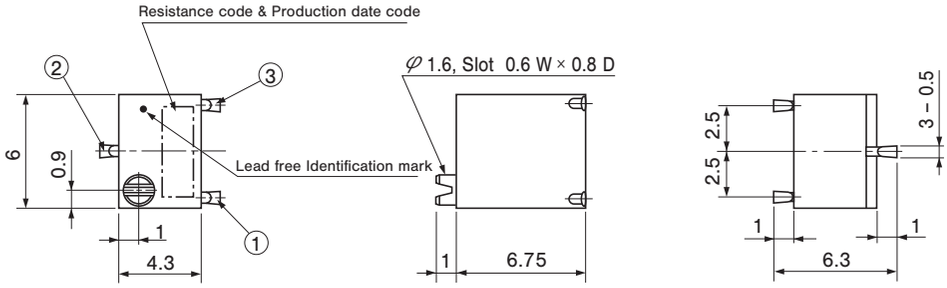

● ST-5EX
Side adjustment

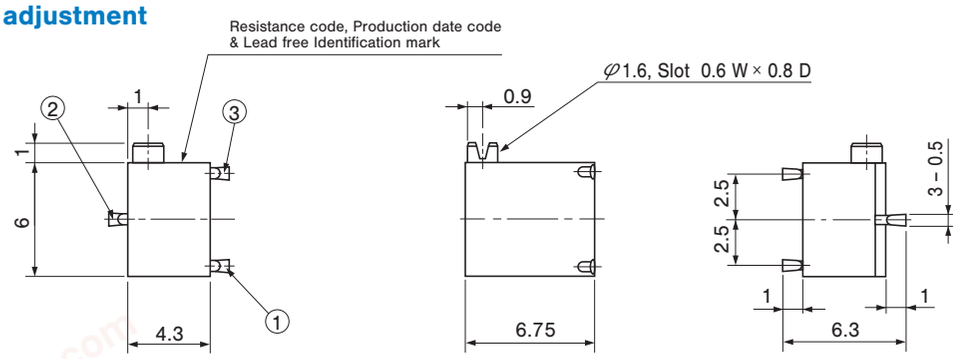

● ST-5EP
Side adjustment

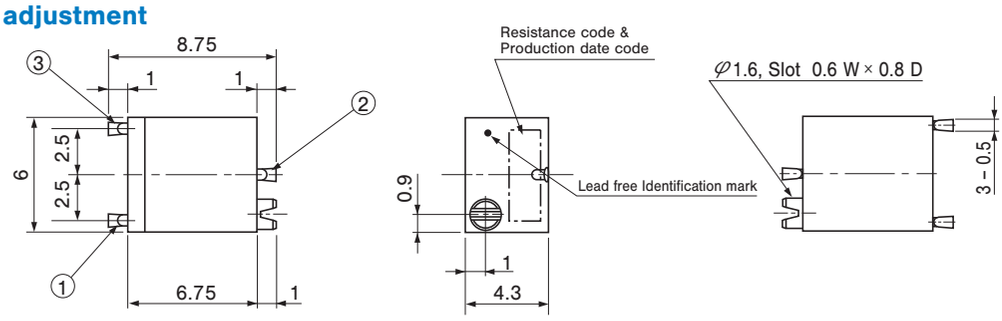

● ST-5ER
Side adjustment

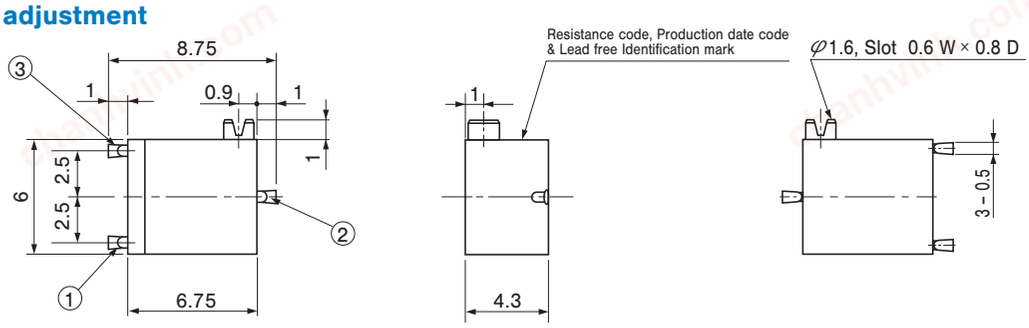

chanhvinh.com

ST-5
SURFACE MOUNT TRIMMERS

■ PACKAGING SPECIFICATIONS

<Taping packaging specifications>

- Taping version is packaged in 500 pcs. per reel. Orders will be accepted for units of 500 pcs., i.e., 500, 1000, 1500 pcs., etc.
- Taping version is boxed with one reel (500 pcs.). Maximum number of consecutive missing pieces = 2 Leader length and reel dimension are shown in the dia- grams below.

● EMBOSSED TAPE DIMENSIONS

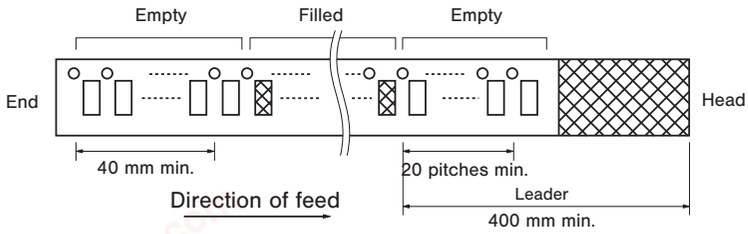

● REEL DIMENSIONS

(**Conforms to JIS C 0806-3**)

(**In accordance with EIAJ ET-7200A**)

(Unit: mm)

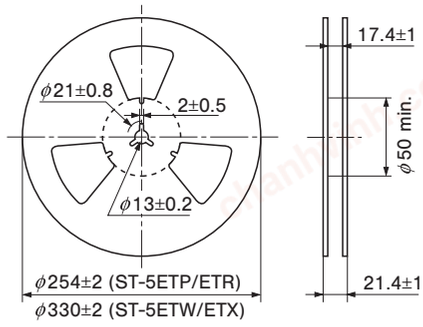

● ST-5ETP/ETR

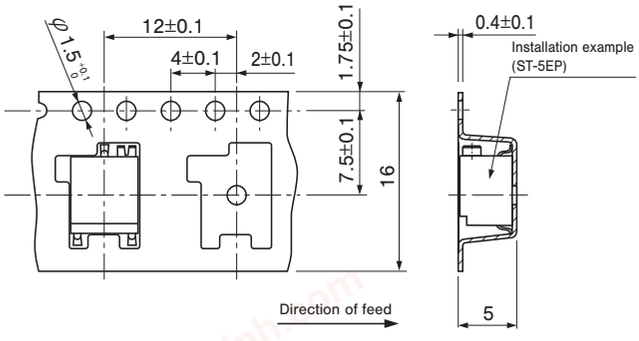

● ST-5ETW/ETX

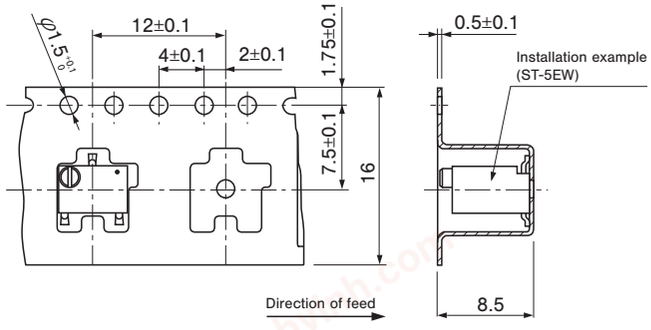

chanhvinh.com

ST-5
SURFACE MOUNT TRIMMERS

<Magazine packaging specifications>

- Magazine is packed 50 pcs. per stick.
  Orders will be accepted for units of 50 pcs., i.e., 50, 100, 150 pcs., etc.
- Magazines are packed 2000 pcs. per box.

Magazine dimensions

(Unit: mm)

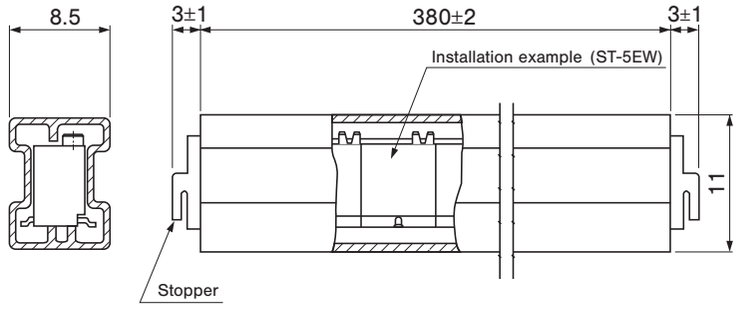

<Bulk pack specifications>

- Unit of bulk in a plastic bag is 50 pcs. per pack.
- Boxing of bulk in a plastic bag is performed with 200 pcs. per box.