chanhvinh.com

SLP8A

AC Rated Miniature Rocker Switches

Dustproof

RoHS Compliant

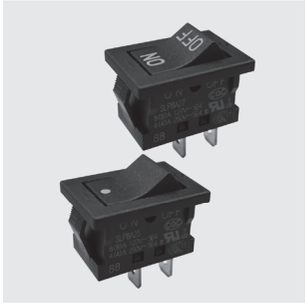

CQC | C-US UL | ENEC

■ Features

1. Electrical life of 50,000 cycles
2. Compact size
3. Four actuator marking options
4. cULus Recognized
5. CQC and ENEC certified products.

■ Specifications

Rating	8(8)A 127 VAC～5E4 4(4)A 250 VAC～5E4
Initial contact resistance	30 mΩ max. (1A 2～4V DC)
Dielectric strength	1500 VAC 1 minute
Insulation resistance	100 MΩ min. (500 VDC)
Operating force	4±2 N
Electrical life	50,000 cycles
Operating temperature range	−10°C～+65°C
Storage temperature range	−25°C～+80°C

■ Part Number Designation

S L P 8 A 2 0

- Series name: SLP
- Current: 8 — 8A
- Switching function: A — OFF – ON
- Terminal style: 0 — Solder Terminal; 2 — TAB (t=0.5 mm) /.187" Quick Connect
- Actuator Marking: 0 — None; 5 — •; 6 — I O; 7 — ON OFF

■ List of Part Numbers

Terminal style	Switching function	Actuator marking			
		None	•	I O	ON OFF
Solder Terminal	OFF-ON	SLP8A00	SLP8A05	SLP8A06	SLP8A07
TAB #187 (t=0.5mm)	OFF-ON	SLP8A20	SLP8A25	SLP8A26	SLP8A27

■ Switching Function

Switching function			
Connecting terminal		Schematic	Number of terminals
A pos.	B pos.		
OFF	ON	P 1	2
—	P-1		

■ Outline Dimensions

Unless otherwise specified, tolerance : ± 0.3 (Unit : mm)

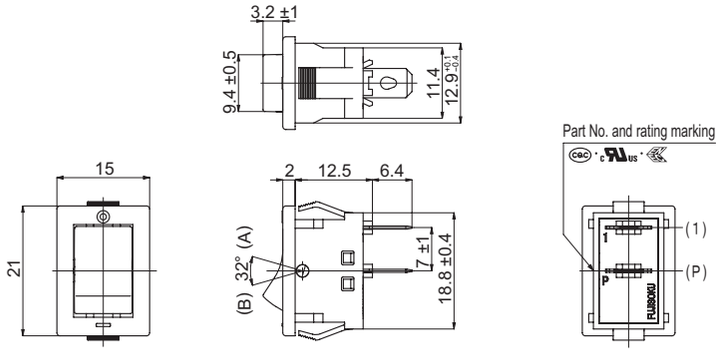

■ Panel Cut-Out Dimensions

(Unit : mm)

Panel thickness	X
0.75 ~ 1.25	19.2
1.25 ~ 2.50	19.4

