chanhvinh.com

SLE210K

Dust Proof

RoHS Compliant

Miniature Power Rocker Switches

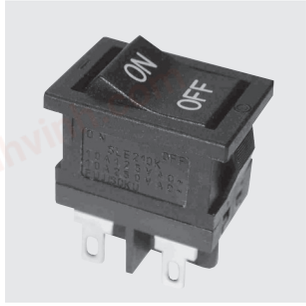

C-US UL | SEMKO

■Features

1. C-US UL and SEMKO approved products
2. Snap-in panel mounting
3. Compact size is suited for space-saving design.
4. Best suited for power supply of equipment.
5. Dust-proof type
6. 100 A rush current type.
7. Breaking distance is 3 mm or over.

■Specifications

Rating	Load	Inductive load				Resistive load
	Inrush current (p.f.=0.6)	125 VAC		250 VAC		10A 125 VAC 10A 250 VAC (p.f.=1.0)
		100 A	60 A	100 A	60 A	
	Break current (p.f.=0.9)	10 A	10 A	10 A	10 A	
	Min.	10 mA 5 VAC/DC (Resistive load)				
	C-US UL	125 VAC 6 A/250 VAC 6 A (Resistive load)				
Initial contact resistance		20 mΩ max. (1A 1～2 VDC)				
Initial dielectric strength		1500 VAC 1 minute				
Initial insulation resistance		100 MΩ min. (500 VDC)				
Electrical life (cycles)		5,000	10,000	5,000	10,000	10,000
Operating force		3.92～12.7 N				
Operating temperature range		−25～+85°C				
Strage temperature range		−40～+85°C				

■Part Numbering

SLE 2 10 K 2 – 5

- SLE — Series code
- 2 — Poles: 2 = 2-poles
- 10 — Current: 10 = 10 A
- K — Switching function: K = ON–OFF
- 2 — Terminal style:

Blank	Solder Terminal
2	TAB#187 (t=0.8)
4	R/A Right Angle Terminal
11	V/M Vertical Mounting Terminal

- 5 — Rocker design:

Blank	
5	
6	
7	ON OFF
9	

★ : The combination marked in blue brackets shows made-to-order products.

Note : Some model names may not be registered. Please refer to the product list for this series.

■Marking Color

Frame color・Rocker color	Making color
Black	White

■Handling Precautions

1. Soldering Specifications

(1)Manual Soldering

Device : Soldering iron

380°C, Max.; 3 seconds, Max.

※The tab terminals cannot be soldered.

chanhvinh.com

■Table of Part Numbers

Frame color and rocker color	Marking color	Switching function	Terminal styles	Part number and rating marking side				
Black	White	ON–OFF	Solder Terminal	☆SLE210K	★SLE210K-5	SLE210K-6	★SLE210K-7	SLE210K-9
			#187 TAB	SLE210K2	SLE210K2-5	SLE210K2-6	SLE210K2-7	SLE210K2-9
			Right Angle Terminal	★SLE210K4	–	☆SLE210K4-6	–	–
			Vertical Mounting Terminal	–	–	★SLE210K11-6	–	–

Solder Terminal

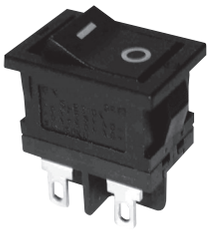

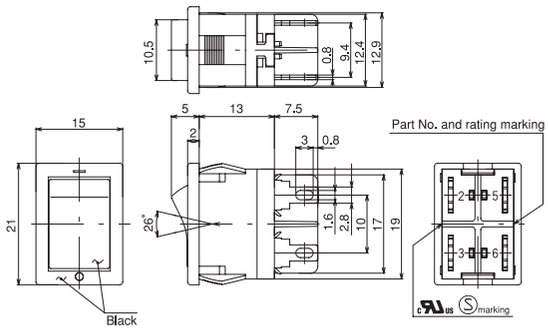

Part No. \ Switching function	Viewed from part No. & rating marking side	
		
SLE210K■	ON	OFF
Connecting terminals	2–3 5–6	–

(t=0.8)

TAB#187 Terminal

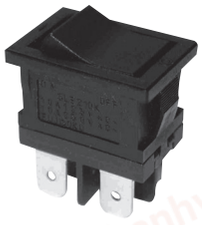

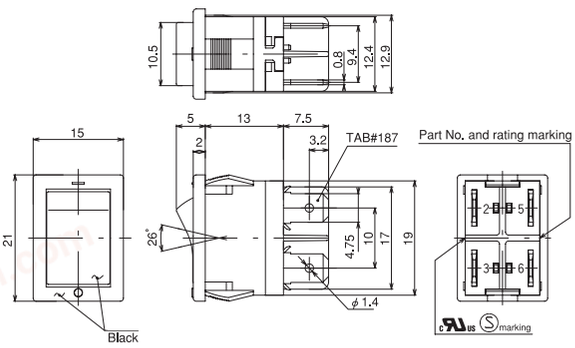

Right Angle Terminal



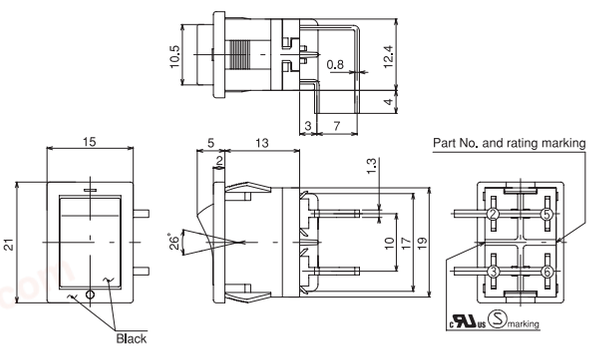

■PC Hole Layouts（Top view）

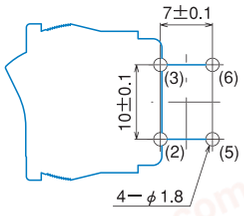

The blue lines show the outline of the switch.

Vertical Mounting Terminal

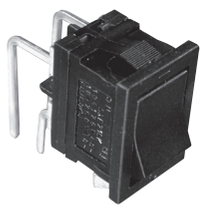

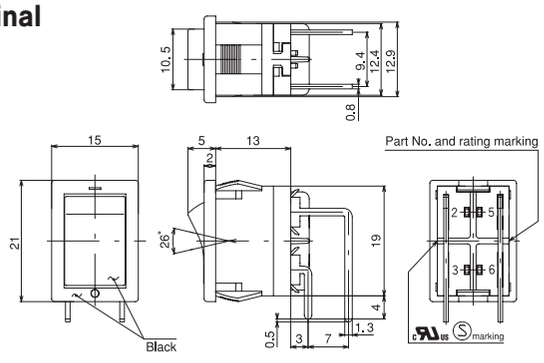

■PC Hole Layouts（Top view）

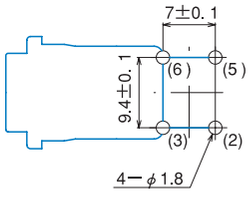

The blue lines show the outline of the switch.

☆：Semi-standard products.　★：Made to order products.

●Terminal numbers are shown on the bottom of the switch.

chanhvinh.com

SLE210K

Switch Guard **Dedicated for use of rocker switches**



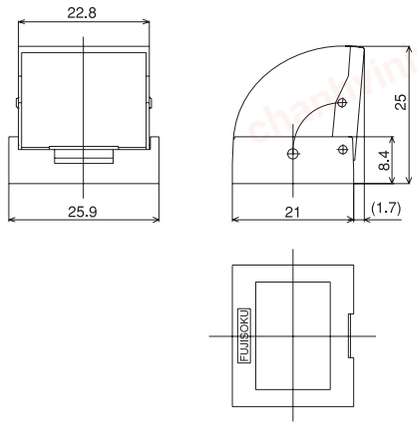

■Features

Clear visibility and one-touch mounting to save labor

■Application

Best suited for protection of malfunction of miniature rocker switches (panel cutout: 19.2 x 12.9mm)

An application switch	●SLE6 series	●SLE10 series
	●SL10K series	●SLE210K series

※The switch guard cannot be used for the SLE10K series, SLE210K right angle terminal.

■Specifications

Part Name: Switch guard
Part Number: 140007250027
Color: Black (transparent cover)

■Approvals

UL File No.E43275
SEMKO File No. SE-S-2002358

■Packaging Specification

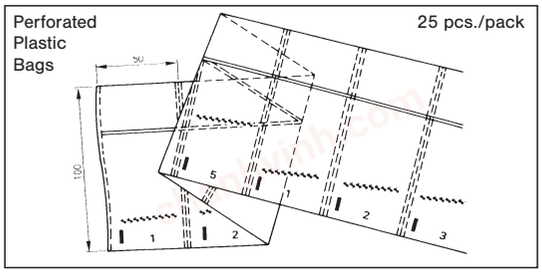

■Panel Cut-Out Dimensions

Switchs

Panel thickness	X
0.75～1.25	19.2
1.25～2.0	19.4
2.0～3.0	19.8

Switch Guard Installation

Panel thickness	X
0.75～1.4	19.4
1.4～2.3	19.8

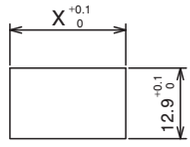

■Precautions for Panel

The edges on the back of the cut-out panel should be squared so that the switch box bites the panel firmly. When the panel is coated, pay attention that the coating will not retain around the edge. Do not reuse the switch that was once mounted on a panel.

