chanhvinh.com

ROTARY CODED SWITCHES (SMD) SA-7000

RoHS compliant

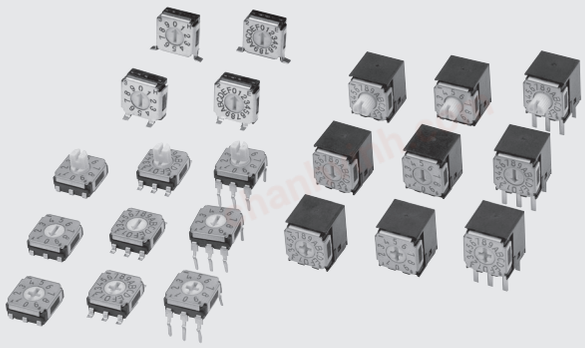

INTERNAL STRUCTURE

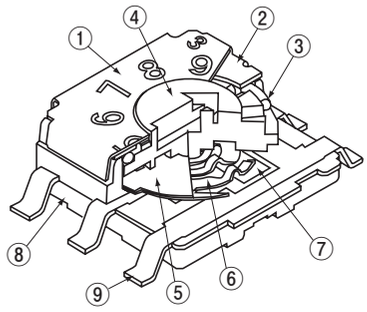

	Part name	Material	Flammability
①	Marking cover	Stainless steel (SUS 304)	—
②	Cover		
③	“O” ring	Silicone rubber	UL94HB
④	Rotor	Polyphenylenesulphide	UL94V-0
⑤	Spacer	Stainless steel (SUS 304)	—
⑥	Moving contact	Copper alloy, Gold-plated	
⑦	固定接点 Fixed contact		
⑧	Housing	Polyphenylenesulphide	UL94V-0
⑨	Terminal pin	Copper alloy, Gold-plated	—

FEATURES

- RoHS compliant
- Low profile of 3.0 mm
- Wide variety (top or side setting, 10 or 16 positions, J-hook, gull wing or through hole pins) to choose from
- Easy to recognize
- Low-profile side setting type with support terminals is available

PART NUMBER DESIGNATION

S A - 7 0 1 0 T A

Series name

Shape of rotor
0 : Without knob (Minus slot)
1 : With knob
2 : Without knob (Cross slot)

Code format
1 : 10 positions, real code
3 : 10 positions, complementary code
5 : 16 positions, real code
7 : 16 positions, complementary code

Setting position
0 : Top setting
1 : Side setting
2 : Low-profile side setting & forward support terminal type
3 : Low-profile side setting & sideling support terminal type

Form of packaging
T : Taping (Reel)
Blank : Bulk in plastic bag
(Only taping availabe for Low-profile side setting type)

Shape of terminal
A : J-hook
B : Gull wing
C : Through hole pins
(Only gull wing availabe for Low-profile side setting type)

※ Please refer to the LIST OF PART NUMBERS when placing orders.

chanhvinh.com

SA-7000
ROTARY CODED SWITCHES (SMD)

LIST OF PART NUMBERS

Setting position	Shape of rotor	Shape of terminal	Form of packaging	Binary coded decimal		Binary coded hexadecimal		Pieces in package
				Real code	Complementary code	Real code	Complementary code	
Top setting	Minus slot	A J-hook	Taping	SA-7010TA	SA-7030TA	SA-7050TA	SA-7070TA	500 pcs./reel
			Plastic bag	SA-7010A	SA-7030A	SA-7050A	SA-7070A	50 pcs./pack
		B Gull wing	Taping	SA-7010TB	SA-7030TB	SA-7050TB	SA-7070TB	500 pcs./reel
			Plastic bag	SA-7010B	SA-7030B	SA-7050B	SA-7070B	50 pcs./pack
		C Through hole pins	Taping					
			Plastic bag	SA-7010C	SA-7030C	SA-7050C	SA-7070C	50 pcs./pack
	With knob	A J-hook	Taping	SA-7110TA	SA-7130TA	SA-7150TA	SA-7170TA	500 pcs./reel
			Plastic bag	SA-7110A	SA-7130A	SA-7150A	SA-7170A	50 pcs./pack
		B Gull wing	Taping	SA-7110TB	SA-7130TB	SA-7150TB	SA-7170TB	500 pcs./reel
			Plastic bag	SA-7110B	SA-7130B	SA-7150B	SA-7170B	50 pcs./pack
		C Through hole pins	Taping					
			Plastic bag	SA-7110C	SA-7130C	SA-7150C	SA-7170C	50 pcs./pack
	Cross slot	A J-hook	Taping	SA-7210TA	SA-7230TA	SA-7250TA	SA-7270TA	500 pcs./reel
			Plastic bag	SA-7210A	SA-7230A	SA-7250A	SA-7270A	50 pcs./pack
		B Gull wing	Taping	SA-7210TB	SA-7230TB	SA-7250TB	SA-7270TB	500 pcs./reel
			Plastic bag	SA-7210B	SA-7230B	SA-7250B	SA-7270B	50 pcs./pack
		C Through hole pins	Taping					
			Plastic bag	SA-7210C	SA-7230C	SA-7250C	SA-7270C	50 pcs./pack
Side setting	Minus slot	A J-hook	Taping	SA-7011TA	SA-7031TA	SA-7051TA	SA-7071TA	500 pcs./reel
			Plastic bag	SA-7011A	SA-7031A	SA-7051A	SA-7071A	50 pcs./pack
		B Gull wing	Taping	SA-7011TB	SA-7031TB	SA-7051TB	SA-7071TB	500 pcs./reel
			Plastic bag	SA-7011B	SA-7031B	SA-7051B	SA-7071B	50 pcs./pack
		C Through hole pins	Taping					
			Plastic bag	SA-7011C	SA-7031C	SA-7051C	SA-7071C	50 pcs./pack
	With knob	A J-hook	Taping	SA-7111TA	SA-7131TA	SA-7151TA	SA-7171TA	500 pcs./reel
			Plastic bag	SA-7111A	SA-7131A	SA-7151A	SA-7171A	50 pcs./pack
		B Gull wing	Taping	SA-7111TB	SA-7131TB	SA-7151TB	SA-7171TB	500 pcs./reel
			Plastic bag	SA-7111B	SA-7131B	SA-7151B	SA-7171B	50 pcs./pack
		C Through hole pins	Taping					
			Plastic bag	SA-7111C	SA-7131C	SA-7151C	SA-7171C	50 pcs./pack
	Cross slot	A J-hook	Taping	SA-7211TA	SA-7231TA	SA-7251TA	SA-7271TA	500 pcs./reel
			Plastic bag	SA-7211A	SA-7231A	SA-7251A	SA-7271A	50 pcs./pack
		B Gull wing	Taping	SA-7211TB	SA-7231TB	SA-7251TB	SA-7271TB	500 pcs./reel
			Plastic bag	SA-7211B	SA-7231B	SA-7251B	SA-7271B	50 pcs./pack
		C Through hole pins	Taping					
			Plastic bag	SA-7211C	SA-7231C	SA-7251C	SA-7271C	50 pcs./pack
Low-profile side setting & forward support terminal type	Minus slot	B Gull wing	Taping	SA-7012TB	SA-7032TB	SA-7052TB	SA-7072TB	500 pcs./reel
	With knob			SA-7112TB	SA-7132TB	SA-7152TB	SA-7172TB	500 pcs./reel
	Cross slot			SA-7212TB	SA-7232TB	SA-7252TB	SA-7272TB	500 pcs./reel
Low-profile side setting & sideling support terminal type	Minus slot			SA-7013TB	SA-7033TB	SA-7053TB	SA-7073TB	500 pcs./reel
	With knob			SA-7113TB	SA-7133TB	SA-7153TB	SA-7173TB	500 pcs./reel
	Cross slot			SA-7213TB	SA-7233TB	SA-7253TB	SA-7273TB	500 pcs./reel

⊘ : Not manufactured

※ Verify the above part numbers when placing orders.
Taping version can be supplied only in reel unit.

chanhvinh.com

SA-7000
ROTARY CODED SWITCHES (SMD)

STANDARD SPECIFICATIONS

Circuit type	BCD (Real code, complementary code) BCH (Real code, complementary code)
Operating temperature range	−40 ~ 85 °C
Storage temperature range	
Sealing	Non-Washable
Net weight	Approx. 0.32 g (Top setting type without knob) Approx. 0.34 g (Top setting type with knob) Approx. 0.69 g (Side setting type without knob) Approx. 0.71 g (Side setting type with knob) Approx. 0.42 g (Low-profile side setting type without knob) Approx. 0.44 g (Low-profile side setting type with knob)

MECHANICAL CHARACTERISTICS

No. of positions	10, 16
Adjustment torque	20 mN·m {204 gf·cm} maximum
Stepping angle	36° (10 positions) 22.5° (16 positions)
Solderability	245 ± 3 °C, 2 ~ 3 s
Soldering heat	Reflow : 255 °C (Peak temperature) Please refer to the profile below)
	Flow : 260 ± 3 °C, 5~ 6 s, two
	Manual soldering : 350 ± 10 °C, 3 ~ 4 s
Shear (adhesion)	5 N {0.51 kgf} 10 s
Substrate bending	Width 90 mm, bend 3 mm, 5 s, 1 time
Pull-off strength	5 N {0.51 kgf} 10s
Stop strength (With knob only)	5 N {0.51 kgf} 10s

{ } : Reference only

ELECTRICAL CHARACTERISTICS

Contact rating Non-switching Switching Minimum	DC50 V 100 mA DC5 V 100 mA DC20 mV 1 μA
Contact resistance	100 mΩ maximum
Insulation resistance	100 MΩ (DC100 V) minimum
Dielectric strength	AC250 V, 60 s

ENVIRONMENTAL CHARACTERISTICS

Vibration	(Amplitude) 1.5 mm or (Acceleration) 98 m/s^2, 10-500-10 Hz, 3 directions for 2 h each
Shock	490 m/s^2, 11 ms 6 directions for 3 times each
Load life	10000 steps minimum, DC5 V, 100 mA
Humidity (Steady state)	40 °C, Relative humidity 90 ~ 95 %, 240 h
High temperature exposure	85 °C, 96 h
Low temperature exposure	−40 °C, 96 h
Thermal shock	−40 (0.5 h) ~ 85 °C (0.5 h), 5 cycles

〈Reflow profile for soldering heat evaluation〉

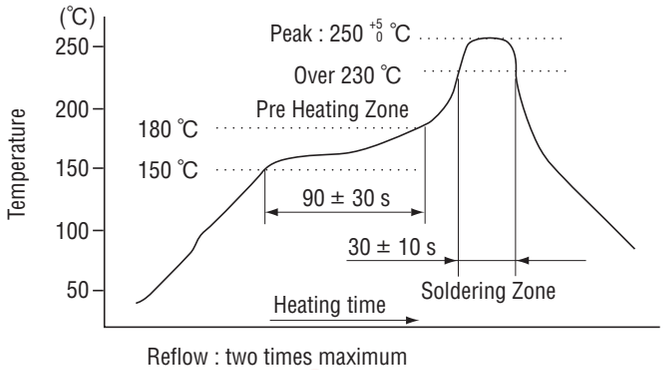

Reflow : two times maximum

chanhvinh.com

SA-7000
ROTARY CODED SWITCHES (SMD)

■ CODE FORMAT

● ···Contact closed

No. of positions			16 positions														
			10 positions														
Position			0	1	2	3	4	5	6	7	8	9	A	B	C	D	E	F
Code	Real code	8									●	●	●	●	●	●	●	●
		4					●	●	●	●					●	●	●	●
		2			●	●			●	●			●	●			●	●
		1		●		●		●		●		●		●		●		●
	Complementary code	$\overline{8}$	●	●	●	●	●	●	●	●								
		$\overline{4}$	●	●	●	●					●	●	●	●				
		$\overline{2}$	●	●			●	●			●	●			●	●		
		$\overline{1}$	●		●		●		●		●		●		●		●	

■ RECOMMENDED P.C.B. PAD OUTLINE DIMENSIONS

(Unit: mm)

<Top setting>

● A type

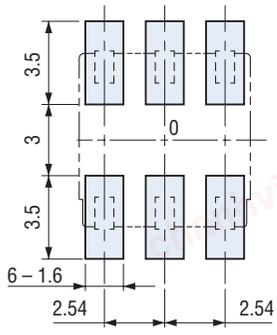

● B type

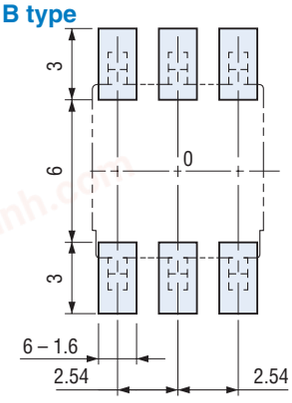

<Side setting>

● A type

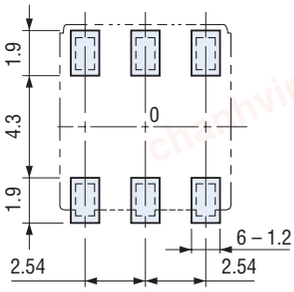

● B type

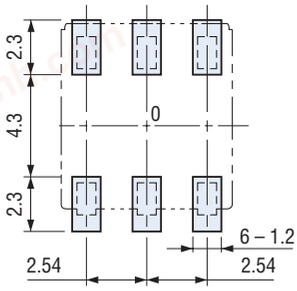

<Low-profile side setting & forward support terminal type (B type)>

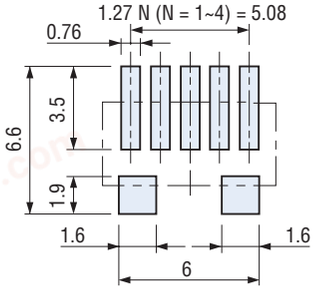

<Low-profile side setting & sideling support terminal type (B type)>

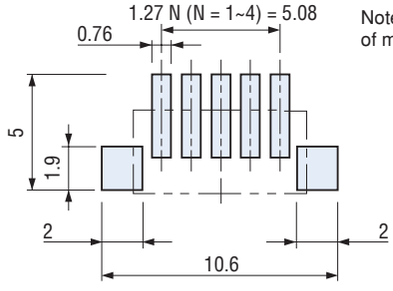

Note) The zero point is the center of mounting.

■ SIZE OF P.C.B. PROCESSING

<Top setting>

● C type

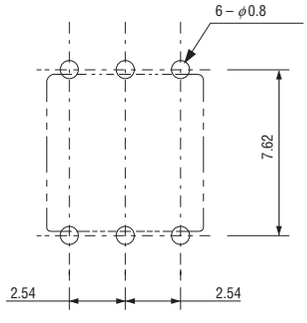

<Side setting>

● C type

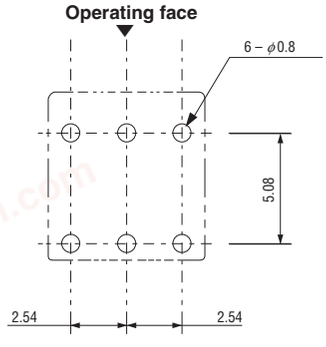

chanhvinh.com

SA-7000
ROTARY CODED SWITCHES (SMD)

■ OUTLINE DIMESIONS

Unless otherwise specified, tolerance: ± 0.3 (Unit: mm)

<Top setting>

● SA-7010A (Real code)
● SA-7030A (Complementary code)

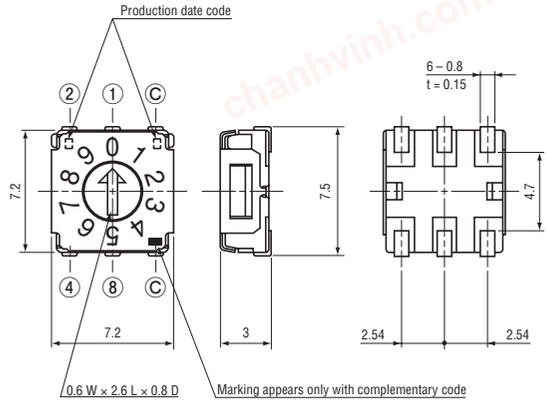

● SA-7050A (Real code)
● SA-7070A (Complementary code)

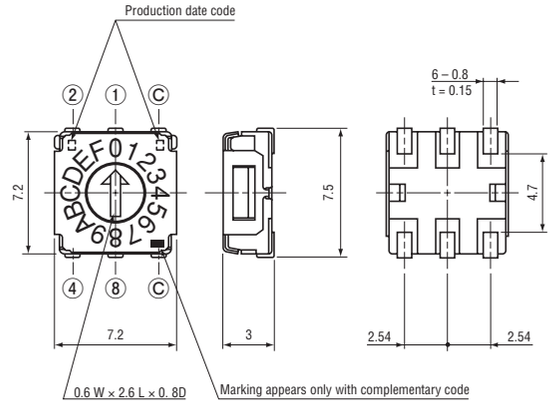

● SA-7010B (Real code)
● SA-7030B (Complementary code)

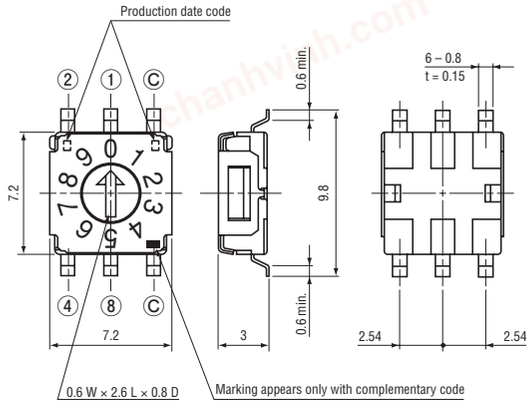

● SA-7050B (Real code)
● SA-7070B (Complementary code)

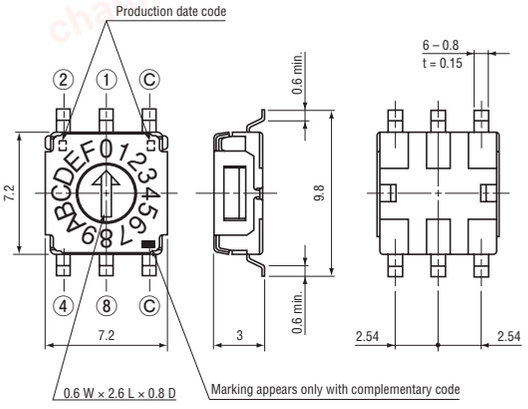

● SA-7010C (Real code)
● SA-7030C (Complementary code)

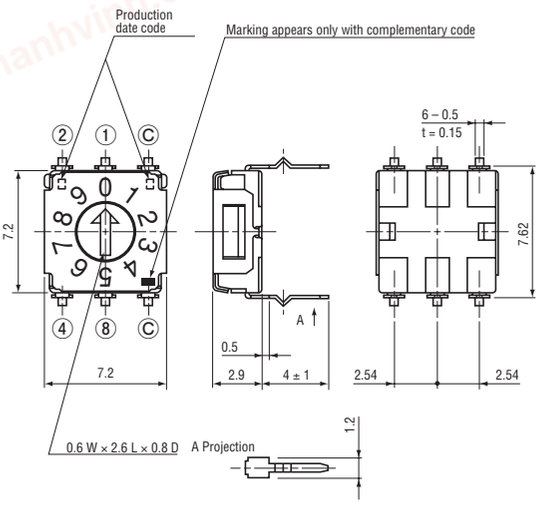

● SA-7050C (Real code)
● SA-7070C (Complementary code)

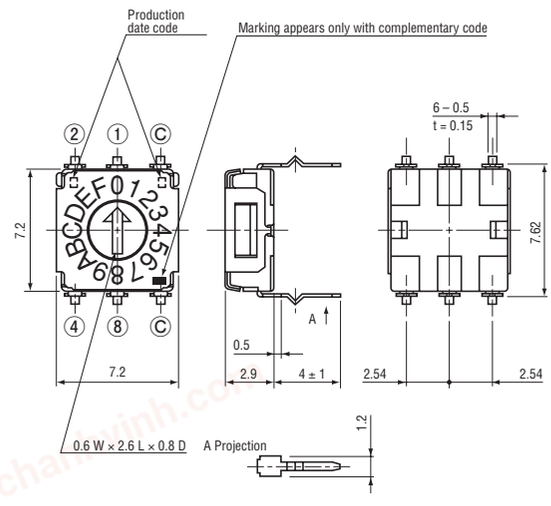

chanhvinh.com

SA-7000
ROTARY CODED SWITCHES (SMD)

■ OUTLINE DIMESIONS

Unless otherwise specified, tolerance: ± 0.3 (Unit: mm)

<Top setting>

● SA-7110A (Real code)
● SA-7130A (Complementary code)

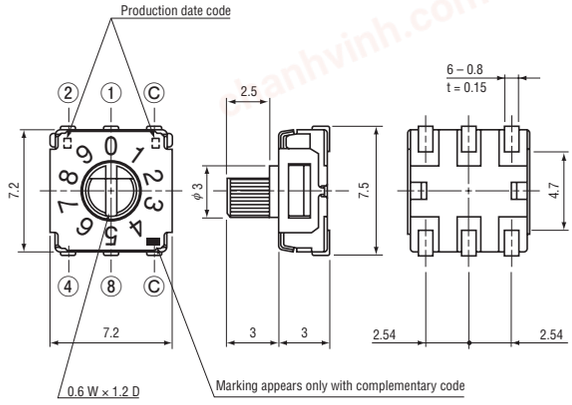

● SA-7150A (Real code)
● SA-7170A (Complementary code)

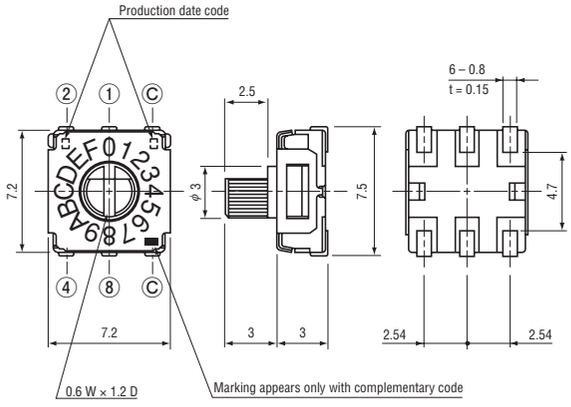

● SA-7110B (Real code)
● SA-7130B (Complementary code)

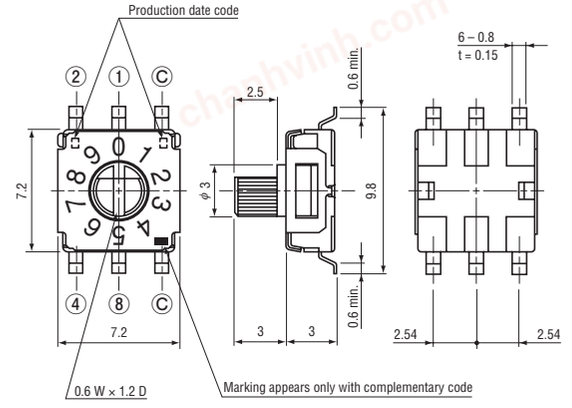

● SA-7150B (Real code)
● SA-7170B (Complementary code)

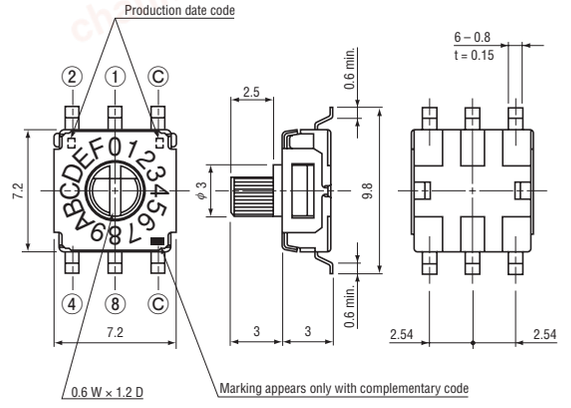

● SA-7110C (Real code)
● SA-7130C (Complementary code)

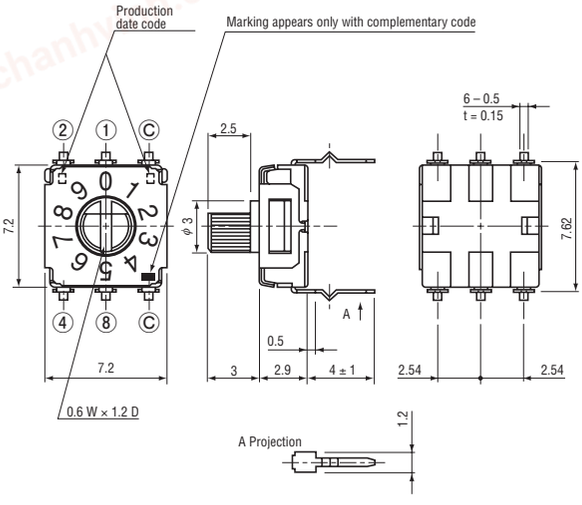

● SA-7150C (Real code)
● SA-7170C (Complementary code)

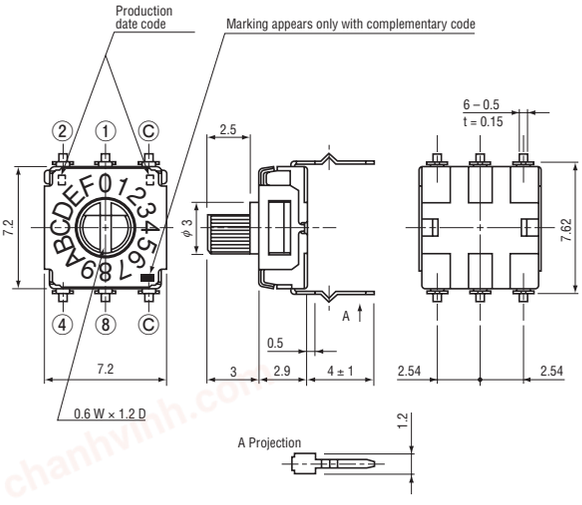

chanhvinh.com

SA-7000
ROTARY CODED SWITCHES (SMD)

■ OUTLINE DIMESIONS

Unless otherwise specified, tolerance: ± 0.3 (Unit: mm)

<Top setting>

● SA-7210A (Real code)
● SA-7230A (Complementary code)

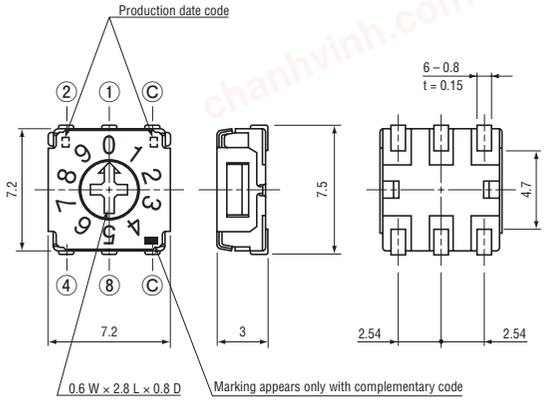

● SA-7250A (Real code)
● SA-7270A (Complementary code)

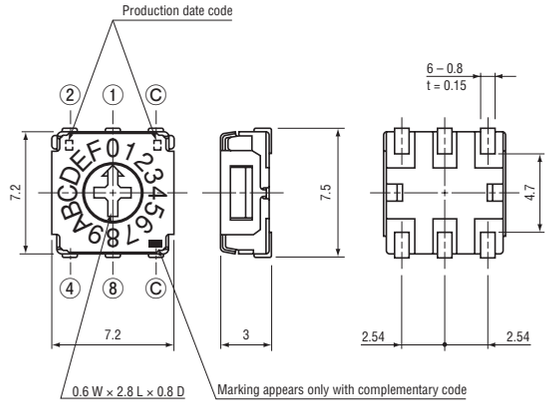

● SA-7210B (Real code)
● SA-7230B (Complementary code)

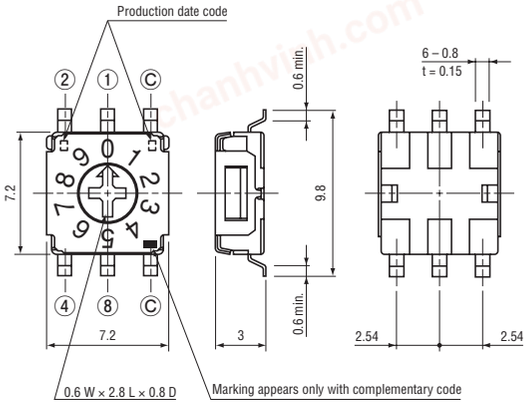

● SA-7250B (Real code)
● SA-7270B (Complementary code)

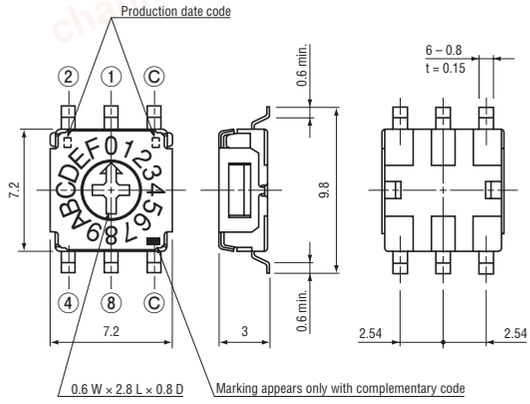

● SA-7210C (Real code)
● SA-7230C (Complementary code)

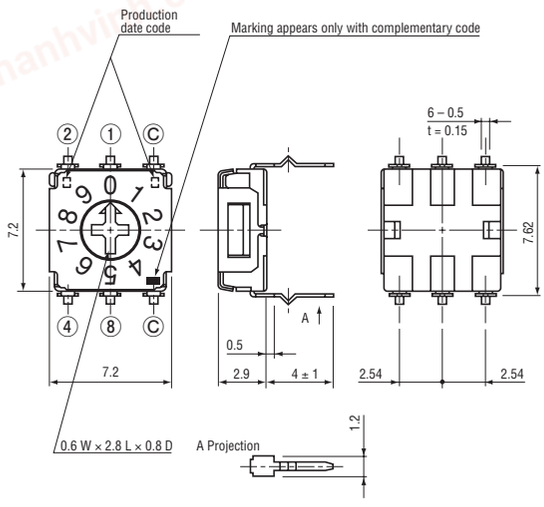

● SA-7250C (Real code)
● SA-7270C (Complementary code)

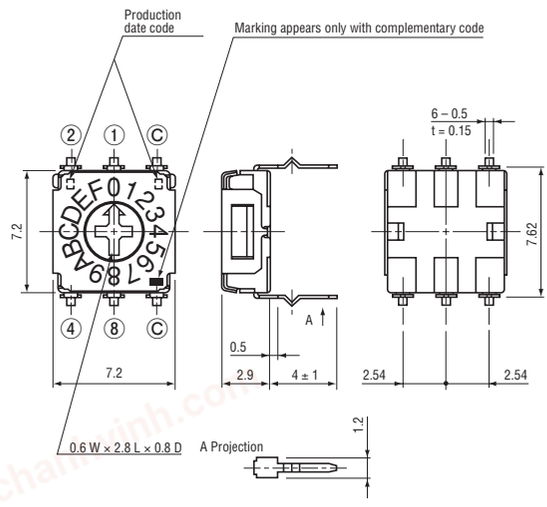

chanhvinh.com

SA-7000
ROTARY CODED SWITCHES (SMD)

■ OUTLINE DIMESIONS

Unless otherwise specified, tolerance: ± 0.3 (Unit: mm)

<Side setting>

● SA-7011A (Real code)
● SA-7031A (Complementary code)

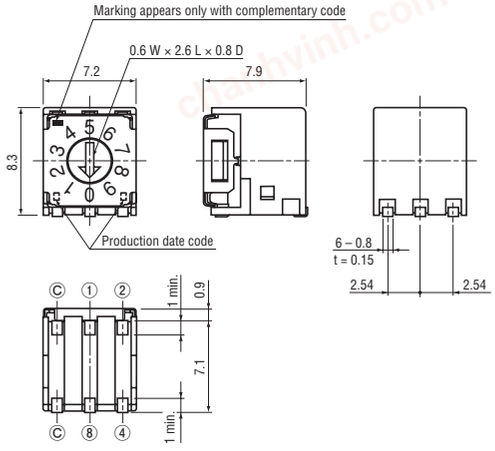

● SA-7051A (Real code)
● SA-7071A (Complementary code)

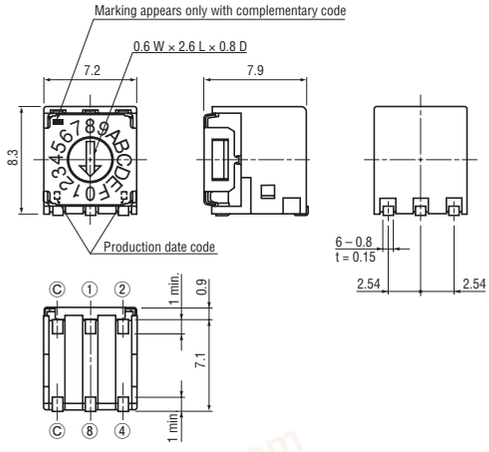

● SA-7011B (Real code)
● SA-7031B (Complementary code)

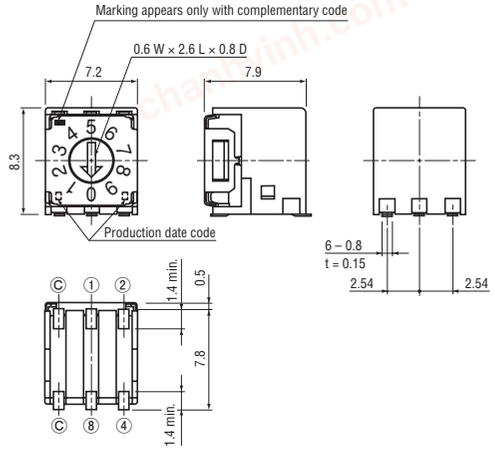

● SA-7051B (Real code)
● SA-7071B (Complementary code)

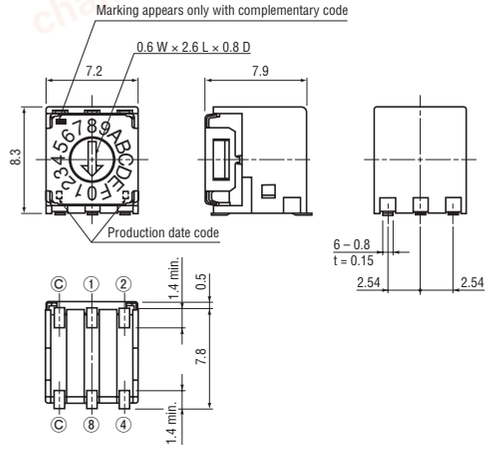

● SA-7011C (Real code)
● SA-7031C (Complementary code)

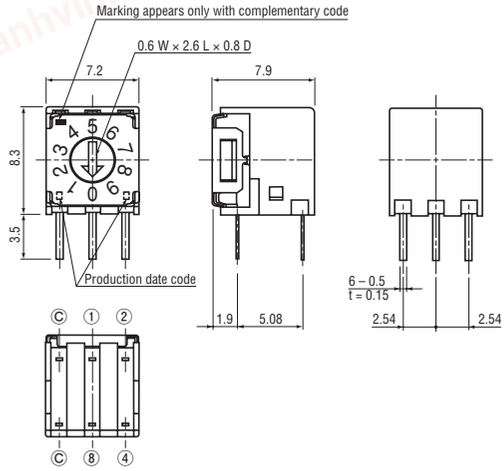

● SA-7051C (Real code)
● SA-7071C (Complementary code)

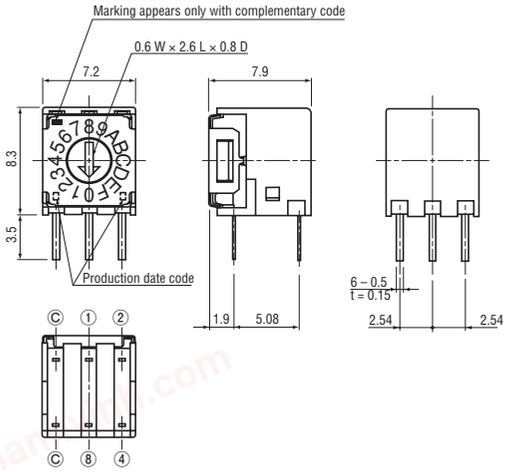

chanhvinh.com

SA-7000
ROTARY CODED SWITCHES (SMD)

■ OUTLINE DIMESIONS

Unless otherwise specified, tolerance: ± 0.3 (Unit: mm)

<Side setting>

● SA-7111A (Real code)
● SA-7131A (Complementary code)

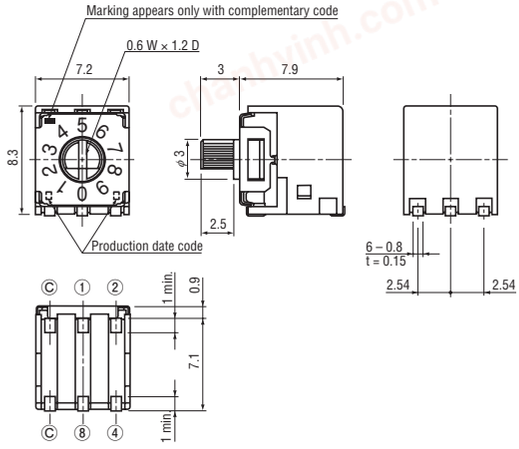

● SA-7151A (Real code)
● SA-7171A (Complementary code)

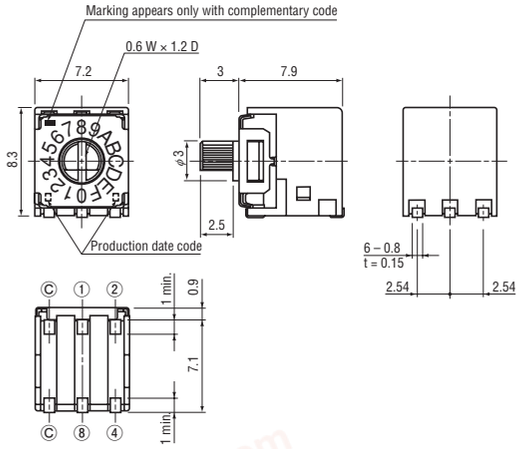

● SA-7111B (Real code)
● SA-7131B (Complementary code)

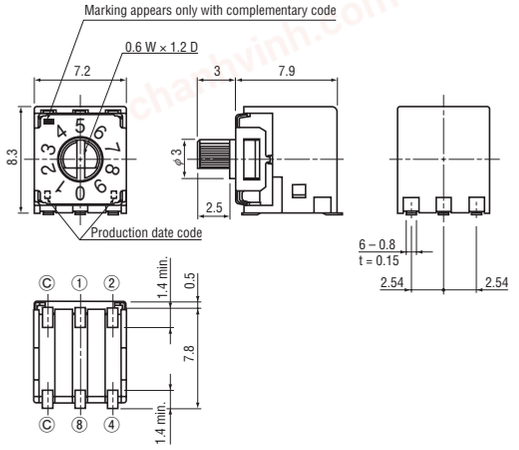

● SA-7151B (Real code)
● SA-7171B (Complementary code)

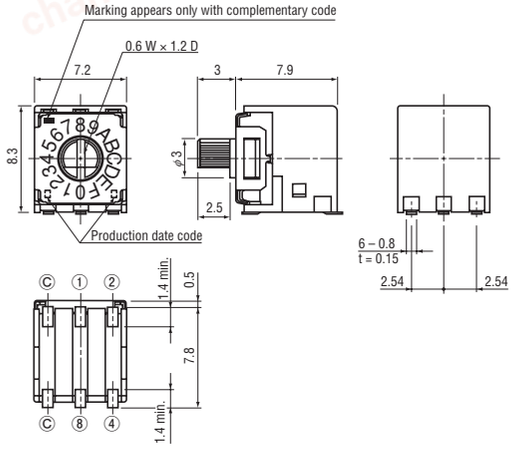

● SA-7111C (Real code)
● SA-7131C (Complementary code)

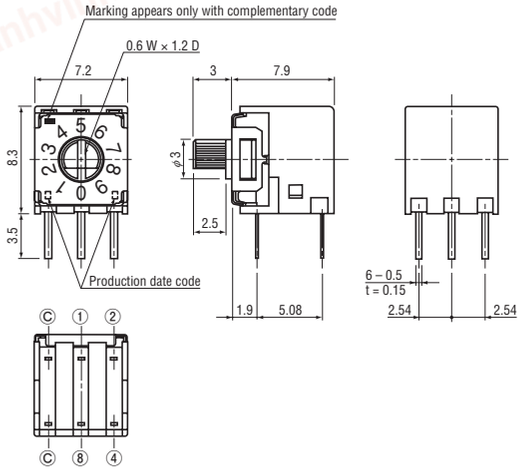

● SA-7151C (Real code)
● SA-7171C (Complementary code)

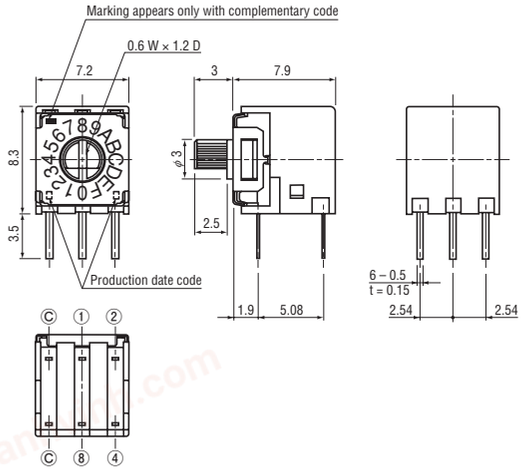

chanhvinh.com

SA-7000
ROTARY CODED SWITCHES (SMD)

■ OUTLINE DIMESIONS

Unless otherwise specified, tolerance: ± 0.3 (Unit: mm)

<Side setting>

● SA-7211A (Real code)
● SA-7231A (Complementary code)

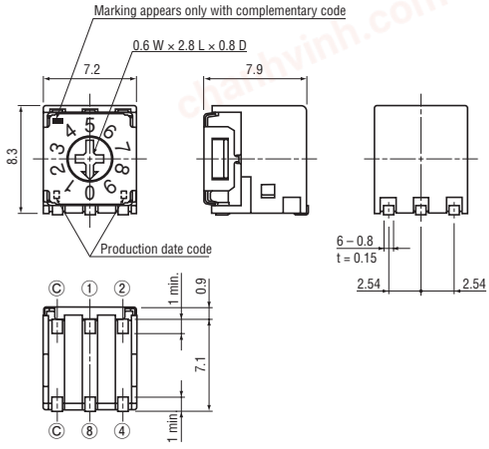

● SA-7251A (Real code)
● SA-7271A (Complementary code)

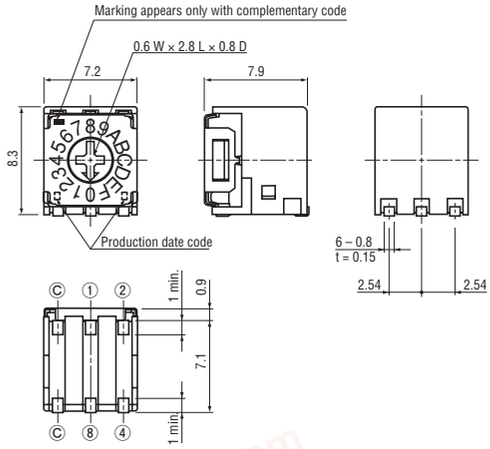

● SA-7211B (Real code)
● SA-7231B (Complementary code)

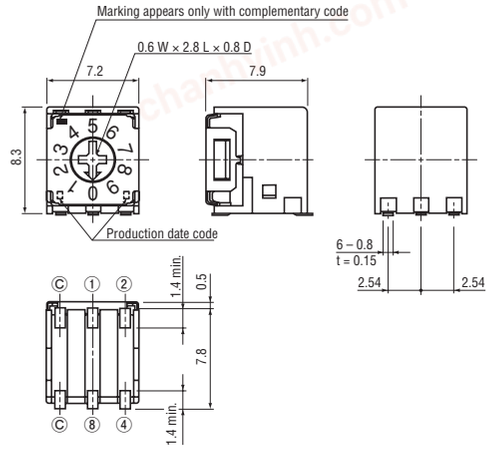

● SA-7251B (Real code)
● SA-7271B (Complementary code)

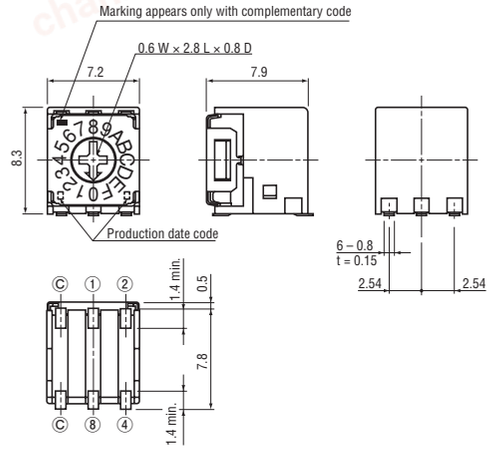

● SA-7211C (Real code)
● SA-7231C (Complementary code)

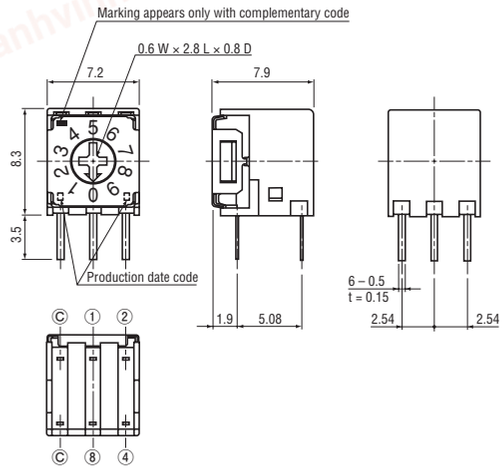

● SA-7251C (Real code)
● SA-7271C (Complementary code)

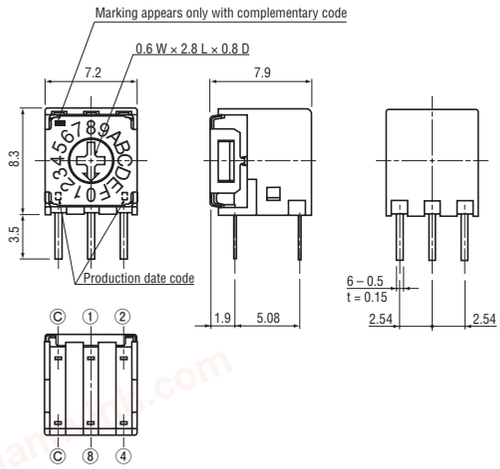

chanhvinh.com

SA-7000
ROTARY CODED SWITCHES (SMD)

■ OUTLINE DIMESIONS

Unless otherwise specified, tolerance: ± 0.3 (Unit: mm)

<Low-profile side setting & forward support terminal type>

● SA-7012B (Real code)
● SA-7032B (Complementary code)

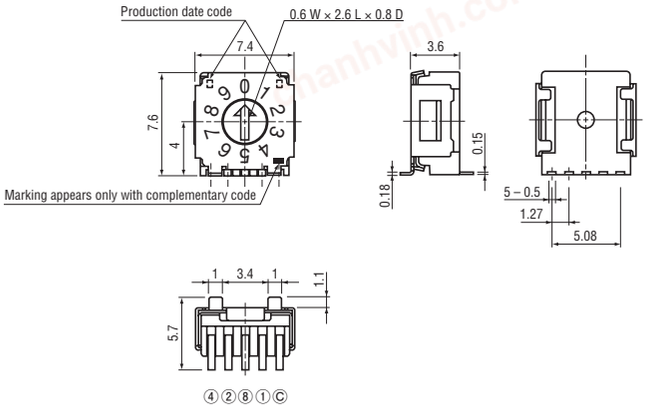

● SA-7052B (Real code)
● SA-7072B (Complementary code)

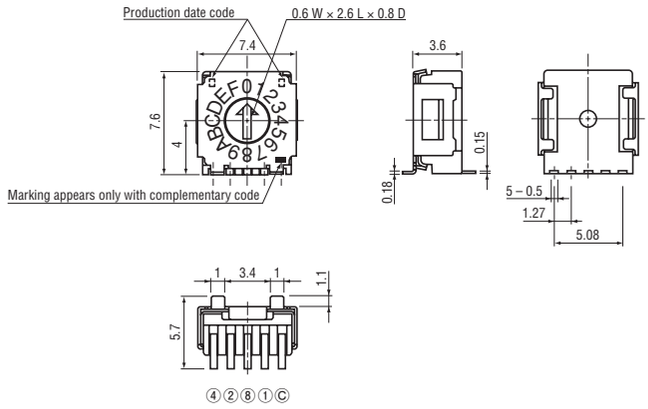

● SA-7112B (Real code)
● SA-7132B (Complementary code)

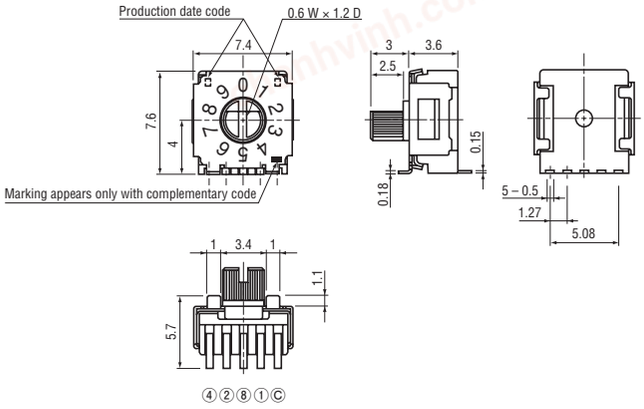

● SA-7152B (Real code)
● SA-7172B (Complementary code)

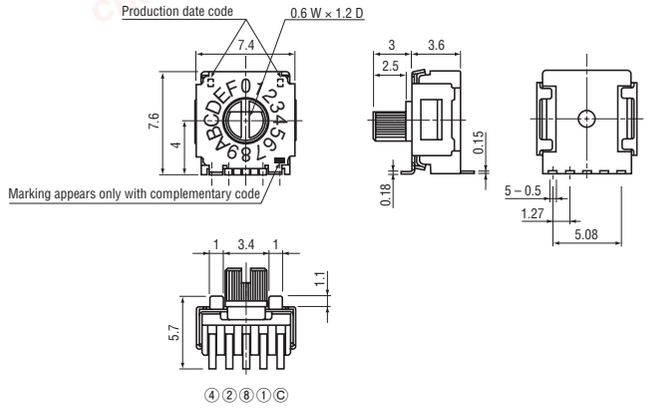

● SA-7212B (Real code)
● SA-7232B (Complementary code)

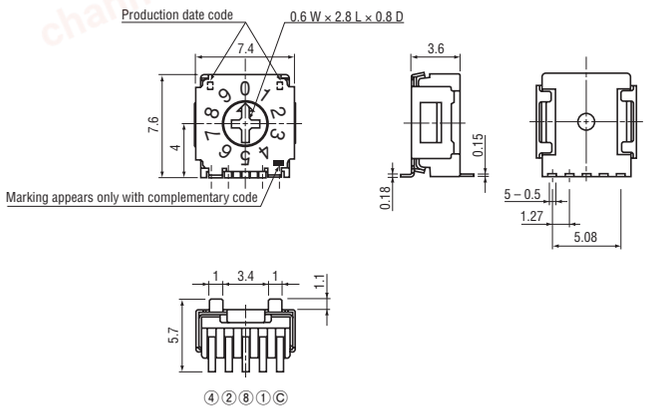

● SA-7252B (Real code)
● SA-7272B (Complementary code)

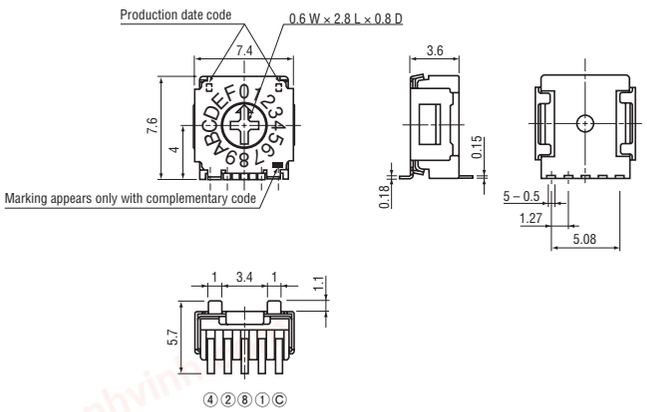

chanhvinh.com

SA-7000
ROTARY CODED SWITCHES (SMD)

■ OUTLINE DIMESIONS

Unless otherwise specified, tolerance: ± 0.3 (Unit: mm)

<Low-profile side setting & sideling support terminal type>

● SA-7013B (Real code)
● SA-7033B (Complementary code)

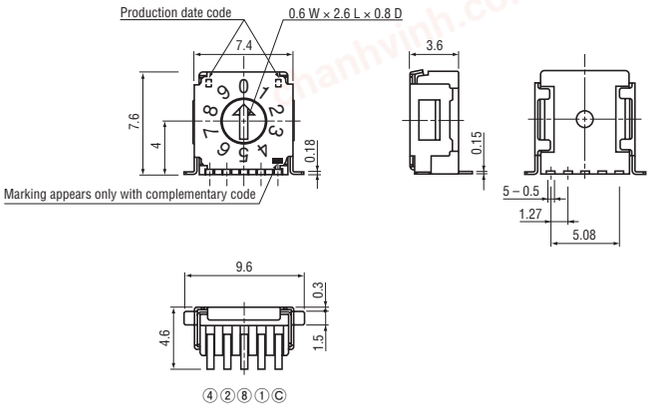

● SA-7053B (Real code)
● SA-7073B (Complementary code)

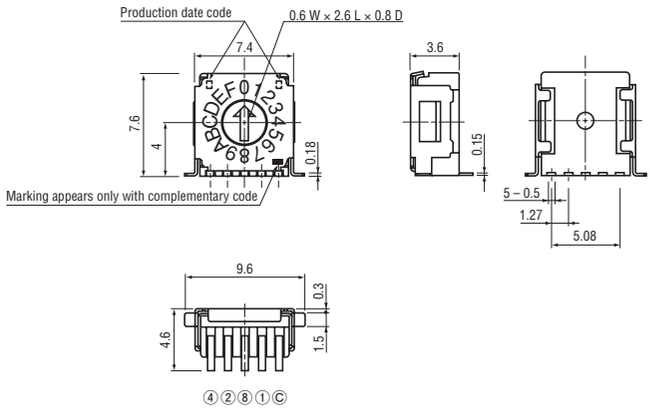

● SA-7113B (Real code)
● SA-7133B (Complementary code)

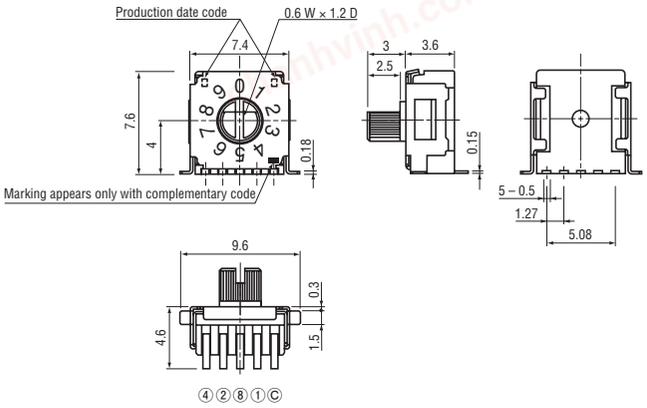

● SA-7153B (Real code)
● SA-7173B (Complementary code)

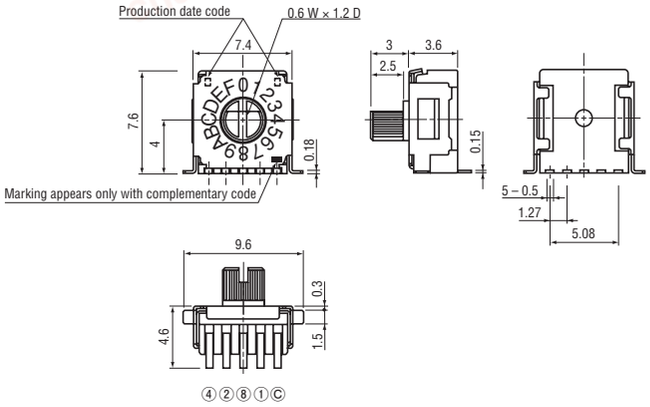

● SA-7213B (Real code)
● SA-7233B (Complementary code)

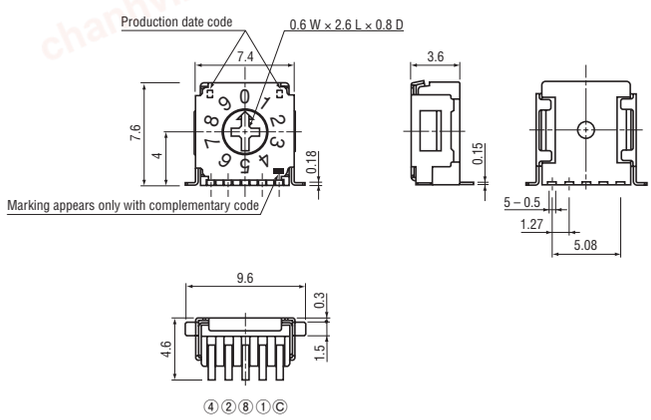

● SA-7253B (Real code)
● SA-7273B (Complementary code)

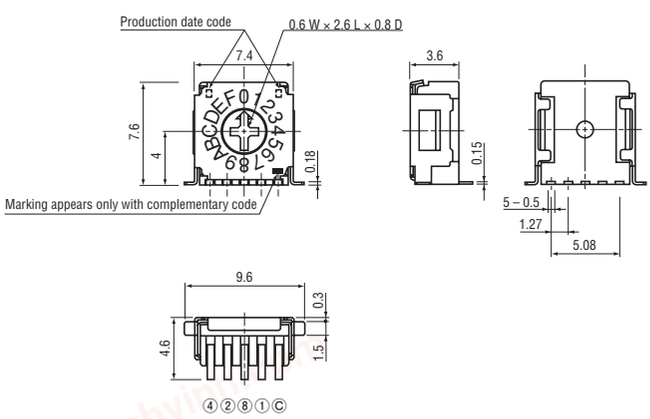

chanhvinh.com

SA-7000
ROTARY CODED SWITCHES (SMD)

■ PACKAGING SPECIFICATIONS

<Taping packaging specifications>

● Taping version is packaged in 500 pcs. per reel.
Orders will be accepted for units of 500 pcs., i.e., 500, 1000, 1500, pcs., etc.

● Taping version is boxed with one reel (500 pcs.).

Maximum number of consecutive missing pieces=2
Leader length and reel dimension are shown in the diagrams below:

● Embossed tape dimensions

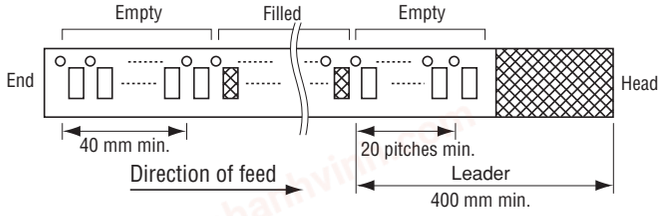

● Reel dimensions (Unit: mm)

(Conforms to JIS C 0806-3)
(In accordance with EIAJ ET-7200A)

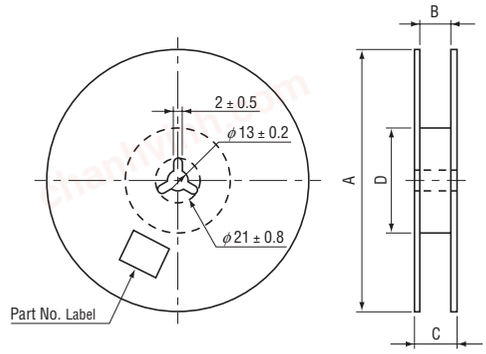

Part number	A	B	C	D
SA-70□0 • SA-72□0TA/TB	φ 254 ± 2	17.4 ± 1	21.4 ± 1	φ 50 min.
SA-71□0TA/TB	φ 330 ± 2	17.4 ± 1	21.4 ± 1	φ 80 ± 1
SA-70□1 • SA-72□1TA/TB	φ 330 ± 2	17.4 ± 1	21.4 ± 1	
SA-71□1TA/TB	φ 330 ± 2	17.4 ± 1	21.4 ± 1	
SA-7□□2 • SA-7□□3 TB	φ 330 ± 2	25.4 ± 1	29.4 ± 1	

● SA-70□0T□
● SA-72□0T□
<Top setting without knob>

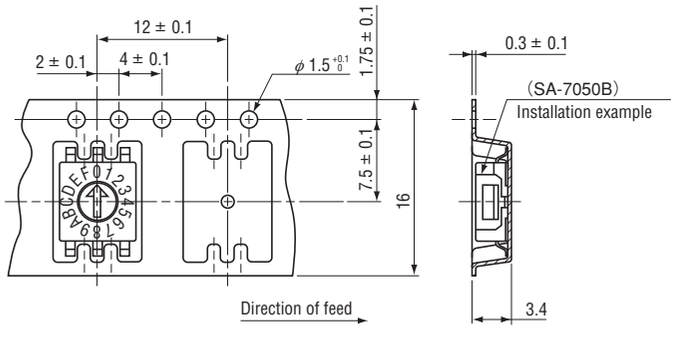

● SA-71□0T□ (Unit: mm)
<Top setting with knob>

(Conforms to JIS C 0806)

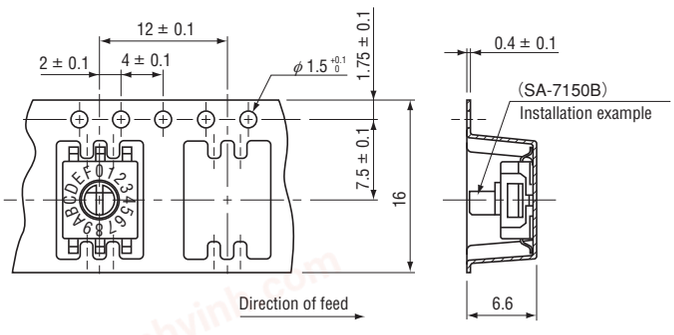

chanhvinh.com

SA-7000
ROTARY CODED SWITCHES (SMD)

● SA-70□1T□
● SA-72□1T□
<Side setting without knob>

(Unit: mm)

(Conforms to JIS C 0806-3)

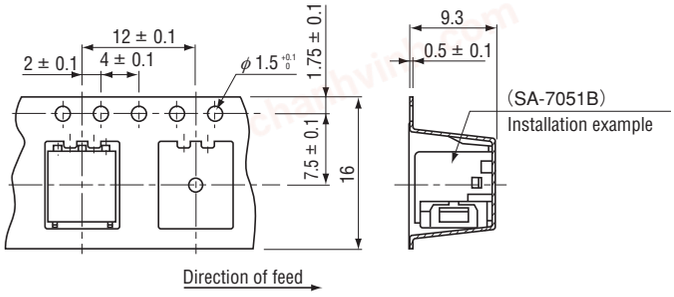

● SA-71□1T□
<Side setting with knob>

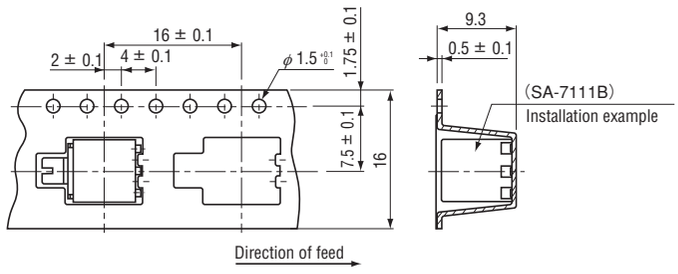

● SA-7□□2TB
● SA-7□□3TB
<Low-profile side setting>

(Conforms to JIS C 0806-3)

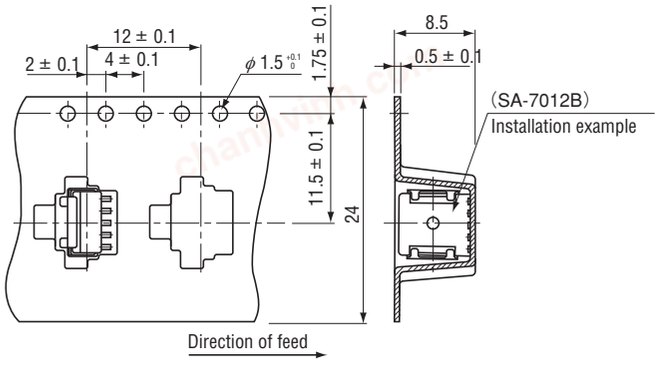

<Bulk pack specifications>

- The smallest unit of bulk pack in a plastic bag is 10 pcs. per pack. Orders will be accepted for unit of minimum 10 pcs., i.e., 10, 20, 30 pcs., etc.
- Boxing of bulk pack in a plastic bag is performed with 50 pcs. (Top setting type is 200 pcs., side setting type is 100 pcs.) per box.