chanhvinh.com

ROTARY CODED SWITCHES (SMD) S-4000

RoHS compliant

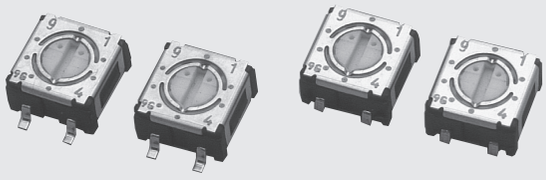

INTERNAL STRUCTURE

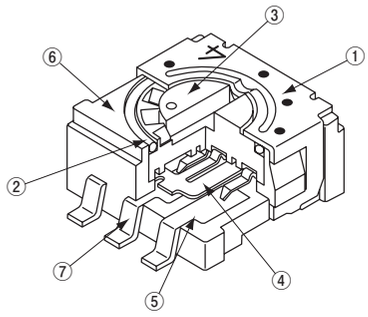

	Part name	Material	Flammability
①	Cover	Stainless steel (SUS 304)	—
②	"O" ring	Silicone rubber	UL94HB
③	Rotor	Polyphenylenesulphide	UL94V-0
④	Moving contact	Copper alloy, Gold-plated	—
⑤	Fixed contact		
⑥	Housing	Polyphenylenesulphide	UL94V-0
⑦	Terminal pin	Copper alloy, Gold-plated	—

FEATURES

- RoHS compliant
- Small size of □4.8 mm makes it perfect for high density board mounting applications
- Compatible with most automatic pick & place machinery
- Gold plated contact provides excellent reliability
- Low profile design of 2.6 mm

PART NUMBER DESIGNATION

S - 4 0 1 0 T A

Series name

Shape of rotor
0 : Without knob

Code format
1 : 10 positions, real code

Shape of terminal
A : J-hook
B : Gull wing

Form of packaging
T : Taping (Reel)
Blank : Bulk in plastic bag

Setting position
0 : Top setting

LIST OF PART NUMBERS

Setting position	Shape of terminal	Form of packaging	BCD real code	Piece in package
Top setting	A (J-hook)	Plastic bag	S-4010A	50 pcs./pack
		Taping	S-4010TA	500 pcs./reel
	B (Gull wing)	Plastic bag	S-4010B	50 pcs./pack
		Taping	S-4010TB	500 pcs./reel

❉ Verify the above part numbers when placing orders.
Taping version can be supplied only in reel unit.

chanhvinh.com

S-4000
ROTARY CODED SWITCHES (SMD)

STANDARD SPECIFICATIONS

Circuit type	BCD (Real code)
Operating temperature range	–25 ~ 70 °C
Storage temperature range	
Sealing	Non washable
Net weight	Approx. 0.12 g

ELECTRICAL CHARACTERISTICS

Contact rating Non-switching Switching	DC50 V 100 mA DC2.4 V 100 mA, DC24V, 10 mA
Contact resistance	100 mΩ maximum
Insulation resistance	100 MΩ (DC100 V) minimum
Dielectric strength	AC250 V, 60 s

MECHANICAL CHARACTERISTICS

No. of positions	10
Adjustment torque	10 mN·m {102 gf·cm} maximum
Stepping angle	36° (10 positions)
Solderability	245 ± 3 °C, 2 ~ 3 s
Soldering heat	Reflow : 255 °C (Peak temperature) (Please refer to the profile below)
	Manual soldering : 350 ± 10 °C, 3 ~ 4 s
Shear (adhesion)	5 N {0.51 kgf} 10 s
Substrate bending	Width 90 mm, bend 3 mm, 5 s, 1 time
Pull-off strength	5 N {0.51 kgf} 10 s

{ } : Reference only

ENVIRONMENTAL CHARACTERISTICS

Vibration	(Amplitude) 1.5 mmor (Acceleration) 98 m/s^2, 10-500-10 Hz, 3 directions for 2 h each
Shock	490 m/s^2, 11 ms 6 directions for 3 times each
Load life	10000 steps minimum DC2.4 V 100 mA
Humidity (Steady state)	40 °C, Relative humidity 90 ~ 95 %, 240 h
High temperature exposure	70 °C, 96 h
Low temperature exposure	–25 °C, 96 h
Thermal shock	–25 (0.5 h) ~ 70 °C (0.5 h), 5 cycles

〈Reflow profile for soldering heat evaluation〉

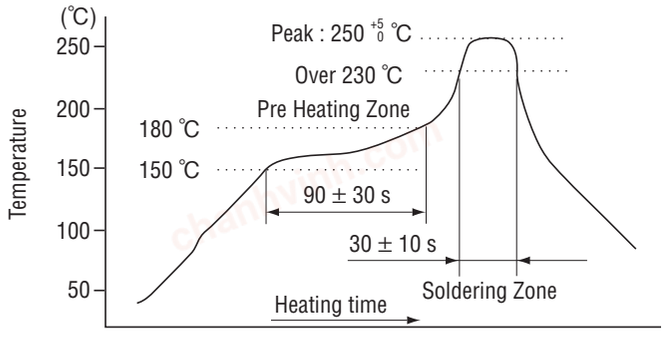

Reflow : two times maximum

CODE FORMAT

No. of positions			10 positions									
Positions			0	1	2	3	4	5	6	7	8	9
Code	Real code	8									●	●
		4					●	●	●	●		
		2			●	●			●	●		
		1		●		●		●		●		●

●···Contact closed

chanhvinh.com

S-4000
ROTARY CODED SWITCHES (SMD)

OUTLINE DIMESIONS

Unless otherwise specified, tolerance: ± 0.3 (Unit: mm)

S-4010A

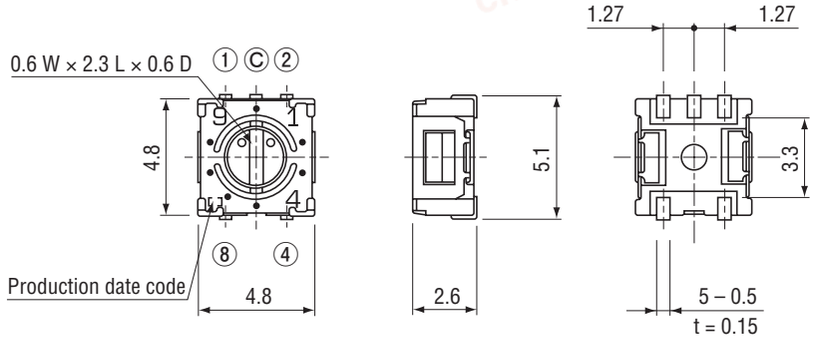

S-4010B

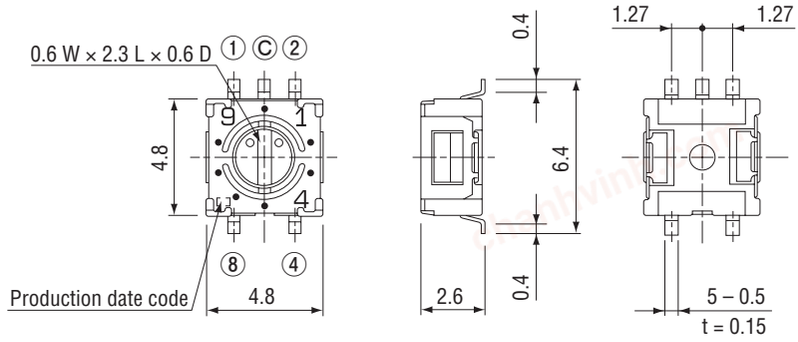

RECOMMENDED P.C.B. PAD OUTLINE DIMENSIONS

(Unit : mm)

A type

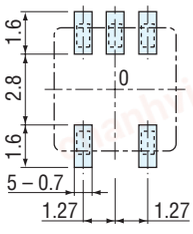

B type

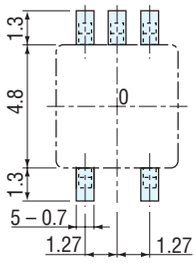

Note) The zero point is the center of mounting.

chanhvinh.com

S-4000
ROTARY CODED SWITCHES (SMD)

■ PACKAGING SPECIFICATIONS

<Taping packaging specifications>

- Taping version is packaged in 500 pcs. per reel.
  Orders will be accepted for units of 500 pcs., i.e., 500, 1000, 1500, pcs., etc.
- Taping version is boxed with one reel (500 pcs.).

Maximum number of consecutive missing pieces=2.
Leader length and reel dimension are shown in the diagrams below:

● Embossed tape dimensions

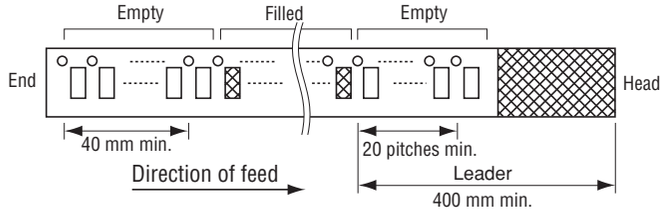

● Reel dimensions

(Unit: mm)

(Conforms to JIS C 0806-3)
(In accordance with EIAJ ET-7200A)

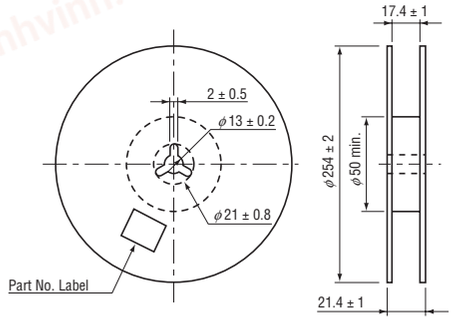

● S-4010TA/TB

(Conforms to JIS C 0806-3)
(Unit: mm)

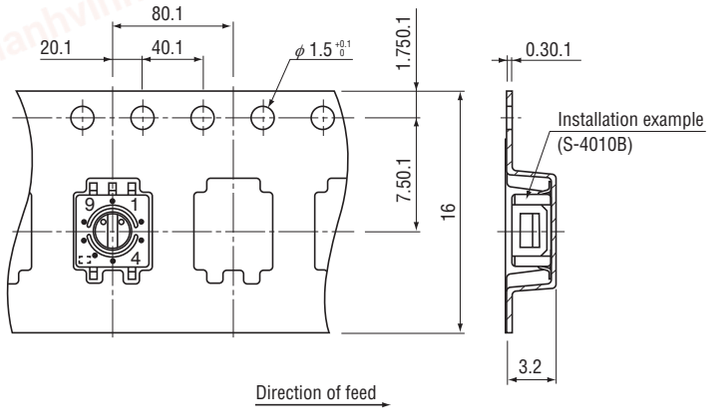

<Bulk pack specifications>

- The smallest unit of bulk pack in plastic bag is 10 pcs. per pack.
  Orders will be accepted for unit of minimum 10 pcs., i.e., 10, 20, 30 pcs., etc.
- Boxing of bulk in a plastic bag is performed with 50 pcs. (Standard 200 pcs.) per box.