chanhvinh.com

MR(30° Step)

Miniature Rotary Switches

RoHS compliant



■Features

1. A high-density switch featuring 12 contacts with the same outside diameter as MR 10-contact type.
2. For the terminals, the crimping type is employed and the epoxy sealing is applied to prevent flux entry.
3. Adoption of the wiping mechanism for the contacting area to ensure contacting stability and reliability.

■ Specifications

Contact plating.		Silver plated	Gold plated
Rating	Max.	150mA 125VAC	
	Min.	10mA 5V AC/DC	
Initial contact resistance		30mΩ max.(1A 2~4VDC)	30mΩ max.(1.5mA 200μVAC)
Dielectric strength		500VAC 1 minute	
Insulation resistance		100MΩ min. (500VDC)	
Electrical life		10,000 cycles	
Operating force		14.7N·cm max.	
Stopper strength		49N·cm	
Operating temperature range		−10~+65℃	
Storage temperature range		−20~+85℃	

■Part Numbering

MR 2 — 6 G — Z

Series code | Number of poles | Number of position | Contact plating

1	1pole
2	2poles
3	3poles
4	4poles

12	12position
6	6position
4	4position
3	3position

None	Silver plated
G	Gold plated

■Terminal Style

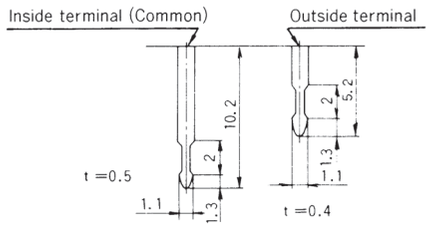

■ Standard Accessories

《Supplied with switch》

Part name	Hex Nut	Lockwasher	Locking Ring
Part No.	140008010241	140008030051	140008020066
Dimensions	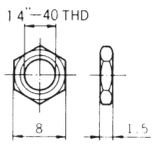	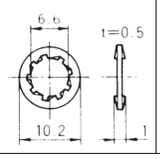	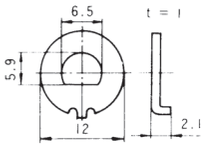
Finish	Nickel plated	Zinc plated	

■Panel Cut-Out Dimensions

Panel thickness : 2.5 mm max.

With **Locking Ring**

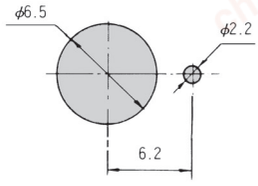

Without **Locking Ring**

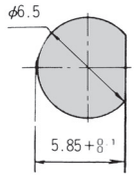

●A wide variety of **optional accessories** are available. Specify the part number from **Optional Accessories** Table on page 542.

●For **Soldering Specifications** and **Flux Cleaning**, see page 547.

chanhvinh.com

MR(30° step)

MR1−12−Z　　1−pole 12−position



Terminal numbers are shown on the switch.

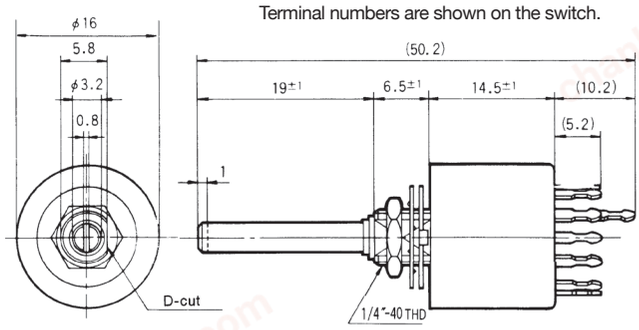

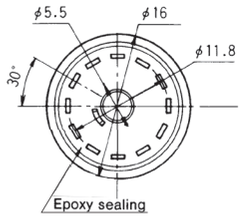

Part No.	Number of steps	Step angle
★MR1−12−Z	360° Endless	30°

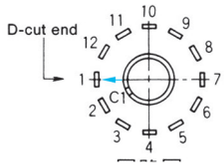

Circuit diagram

MR2−6−Z　　2−pole 6−position



Terminal numbers are shown on the switch.

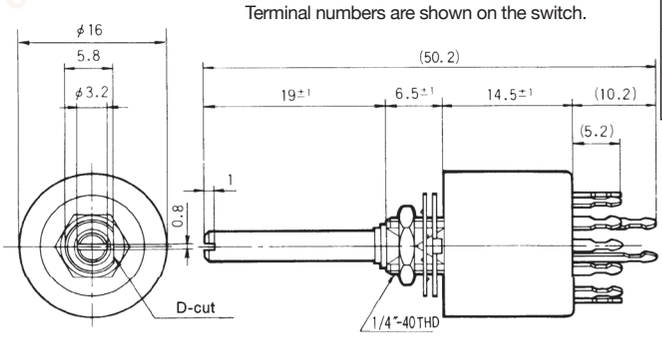

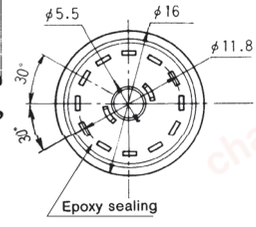

Part No.	Number of steps	Step angle
★MR2−6−Z ★MR2−6G−Z	5 Repetition of from 1 to 6	30°

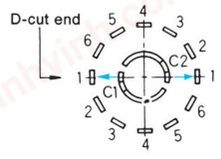

Circuit diagram

MR3−4−Z　　3−pole 4−position

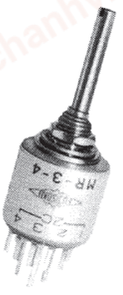

Terminal numbers are shown on the switch.

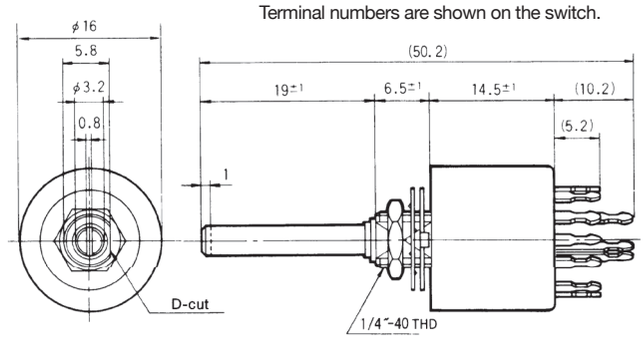

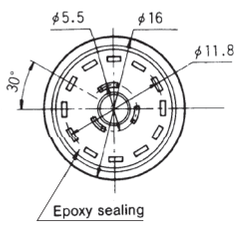

Part No.	Number of steps	Step angle
★MR3−4−Z ★MR3−4G−Z	3 Repetition of from 1 to 4	30°

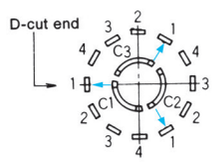

Circuit diagram

MR4−3−Z　　4−pole 3−position



Terminal numbers are shown on the switch.

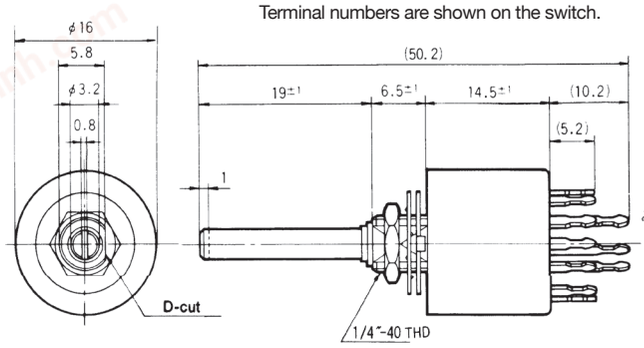

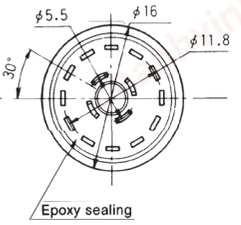

Part No.	Number of steps	Step angle
★MR4−3−Z ———	2 Repetition of from 1 to 3	30°

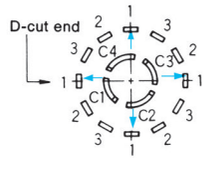

Circuit diagram

●The circuit diagrams show the switches as viewed from the terminal side with the shaft fully turned in the counter-clockwise direction. Note that the **MR1-12** is of an endless type, check the connecting terminals with a circuit tester.

★ : Made to order products.

chanhvinh.com

■Handling Precautions

1. Soldering Specifications

Manual Soldering
Device: Soldering iron
380℃, Max.; 3 seconds, Max.

2. Mounting of Accessories

Mounting of accessories should be done after soldering and flux cleaning.

3. Ambient Conditions

Do not use the switches under the environment where the silver plating is subjected to contact failures by sulfuric gas, ammonia gas or other corrosive gases.
Under the environment where dust and dirt exist, use waterproof type switches.

■Packaging Specifications

Series	MR·MRE series
Perforated Plastic Bags	25 pcs./pack

