chanhvinh.com

CERMET SINGLE TURN TYPE JP-30B

RoHS compliant

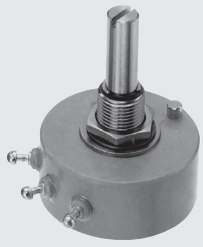

Basic construction

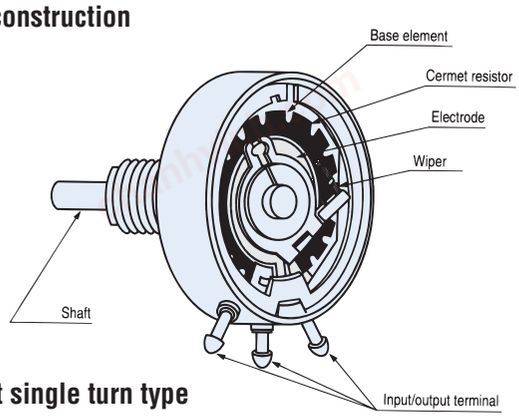

Cermet single turn type

FEATURES

- Cost effective (In house comparison)
- High resoluiion (Essentially infinite)
- RoHS compliant

PART NUMBER DESIGNATION

JP-30B-1k

Series name
JP-30B：設定用 For manual setting

(Ω) Nominal resistance value
500, 1 k, 2 k, 5 k, 10 k, 20 k, 50 k, 100 k

STANDARD SPECIFICATIONS

Item / Part number	JP-30B
Resistance torelance %	± 2
Resolution	Essentially infinite
Independent linearity %	± 0.5
Effective electrical angle	300° ± 1°
Mechanical angle	$300^{\circ}{}^{+20^{\circ}}_{-0^{\circ}}$
Power rating (at 40 °C) W	1.5
Dielectric strength Vrms	1000 1 min
Insulation resistance MΩ minimum	1000 (at DC500 V)
Rotational torque mN·m {gf·cm}	2.94 ~ 14.7 {30 ~ 150}
Stop strength N·m {kgf·cm} maximum	0.490 {5}
Peak noise	2 % or 100 Ω, whichever is greater
Temp. coefficient of resistance 10^{-6}/°C	± 150
Operating temp. range °C	−55 ~ 85
Maximum rotational speed r/min	150
Rotational life	100 thousand cycles
Net weight g	Approx. 26
Strength of tighten screw	0.98 N·m {10 kgf·cm} maximum

※ Perform soldering of the terminals at 380 °C for no more three seconds, and avoid applying excess heat. Also, avoid applying outside force to the terminals.
In case of using multiturn potentiometers, when rotating the shaft to the mechanical limit, apply torque below the strength of the stopper. Also, give due consideration to thrust and radial loading.

chanhvinh.com

JP-30B
POTENTIOMETERS

LIST OF PART NUMBERS

Application	Series name	Nominal resistance value	Part number
For manual setting	JP-30B	500 Ω	JP-30B 500
		1 kΩ	JP-30B 1 k
		2 kΩ	JP-30B 2 k
		5 kΩ	JP-30B 5 k
		10 kΩ	JP-30B 10 k
		20 kΩ	JP-30B 20 k
		50 kΩ	JP-30B 50 k
		100 kΩ	JP-30B 100 k

※ Verify the above part numbers when placing orders.

NOMINAL RESISTANCE VALUE • RATED VOLTAGE • RATED CURRENT

(Ω) Nominal resistance value	JP-30B	
	(V) Rated voltage	(mA) Rated current
500	27.3	54.7
1 k	38.7	38.7
2 k	54.7	27.3
5 k	86.6	17.3
10k	122	12.2
20 k	173	8.66
50 k	273	5.47
100 k	387	3.87

RATED POWER DERATING CURVE

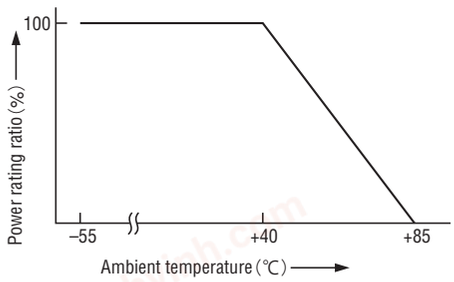

OUTLINE DIMENSIONS

Unless otherwise specified, tolerance: ± 0.5 (Unit: mm)

● JP-30B
For manual setting

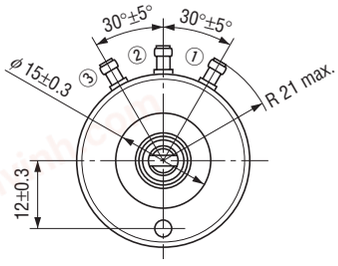

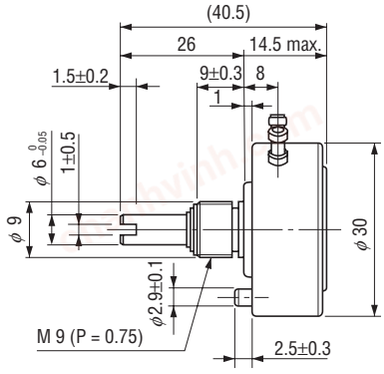

(Accessories)

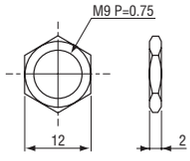

1. Nut

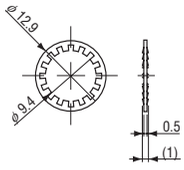

2. Washer