chanhvinh.com

CONDUCTIVE PLASTIC SINGLE TURN TYPE JC series

RoHS compliant



Basic construction
Conductive plastic single turn type

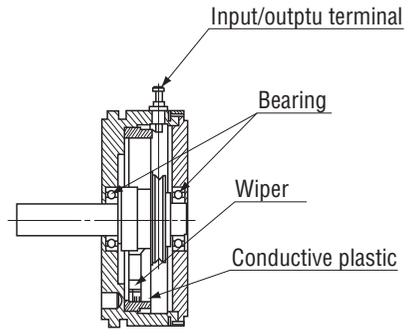

FEATURES

- Compact
- Cost effective (JC22E) in house comparison
- Long life
- High following characteristics
- High resolution (Essentially infinite)
- RoHS compliant

PART NUMBER DESIGNATION

J C 2 2 E 2 k 1 %

Series name
JC22E : Linear φ 22 mm
JC22S : Linear φ 22 mm
JC30S : Linear φ 30 mm
JC40S : Linear φ 40 mm

Independent linearity
0.3 % : ± 0.3 %
0.5 % : ± 0.5 %
1 % : ± 1 %

(Ω) Nominal resistance value
200, 500, 1 k, 2 k, 5 k, 10 k, 20 k

LIST OF PART NUMBERS

Size / Item	Nominal resistance value	Independent linearity	Part number
φ 22 mm	1 kΩ	±1 %	JC22E 1 k 1 %
	2 kΩ		JC22E 2 k 1 %
	5 kΩ		JC22E 5 k 1 %
	10 kΩ		JC22E 10 k 1 %
	200 Ω	±0.5 %	➔ JC22S 200 0.5 %
	500 Ω		➔ JC22S 500 0.5 %
	1 kΩ		JC22S 1 k 0.5 %
	2 kΩ		JC22S 2 k 0.5 %
	5 kΩ		JC22S 5 k 0.5 %
	10 kΩ		JC22S 10 k 0.5 %

※ Verify the above part numbers when placing orders.

The products indicated by ➔ mark are manufactured upon receipt of order basis.

Size / Item	Nominal resistance value	Independent linearity	Part number
φ 30 mm	500 Ω	±0.5 %	JC30S 500 0.5 %
	1 kΩ		JC30S 1 k 0.5 %
	2 kΩ		JC30S 2 k 0.5 %
	5 kΩ		JC30S 5 k 0.5 %
	10 kΩ		JC30S 10 k 0.5 %
	20 kΩ		JC30S 20 k 0.5 %
φ 40 mm	500 Ω	±0.3 %	JC40S 500 0.3 %
	1 kΩ		JC40S 1 k 0.3 %
	2 kΩ		JC40S 2 k 0.3 %
	5 kΩ		JC40S 5 k 0.3 %
	10 kΩ		JC40S 10 k 0.3 %
	20 kΩ		JC40S 20 k 0.3 %

chanhvinh.com

JC
POTENTIOMETERS

■ STANDARD SPECIFICATIONS

Item \ Output / Part number		Single turn			
		JC22E	JC22S	JC30S	JC40S
Nominal resistance value		Refer to LIST OF PART NUMBERS			
Resistance torelance	%	± 20	± 15		
Resolution		Essentially infinite			
Independent linearity	%	± 1	± 0.5		± 0.3
Effective electrical angle		320° ± 5°	340° ± 5°	343° ± 5°	345° ± 5°
Mechanical angle		360° 連続　360° continuous			
Power rating (at 40 °C)	W	0.5		0.7	1.5
Dielectric strength	Vrms	1000　1 min			
Insulation resistance	MΩ minimum	1000 (at DC500 V)			
Rotational torque	mN·m {gf·cm} maximum	4.9 {50}	0.98 {10}	1.18 {12}	1.47 {15}
Strength of tighten screw	N·m {kgf·cm} maximum	0.98 {10}	—		
Temp. coefficient of resistance	ppm/°C	± 400			
Operating temp. range	°C	–40 ~ 85			
Maximum rotational speed	min^{-1}	100	300		
Rotational life (cycles)		10 million	20 million	30 million	
Output smoothness		0.1 % maximum			
Net weight	g	Approx. 15	Approx. 17	Approx. 24	Approx. 56
Protection grade		IP40			

■ RATED POWER DERATING CURVE

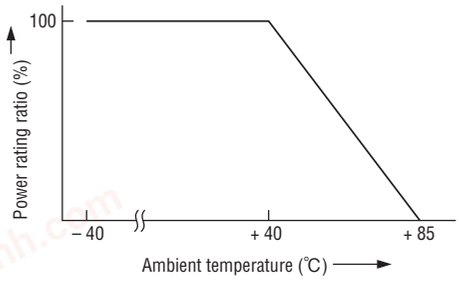

chanhvinh.com

OUTLINE DIMENSIONS

(Unit : mm)

● JC22E

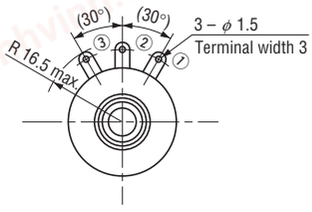

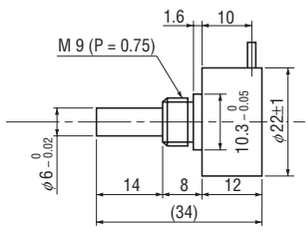

JC22E, JC22S
JC30S, JC40S

Wiring diagram

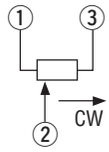

(JC22E Accessories)

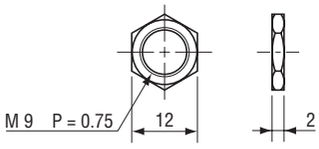

1. Nut

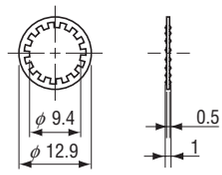

2. Washer

● JC22S

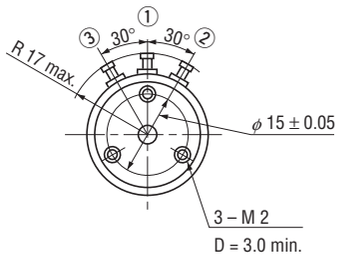

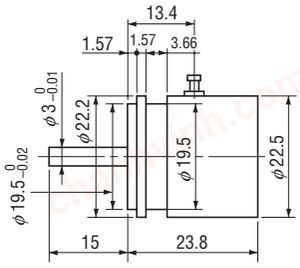

● JC30S

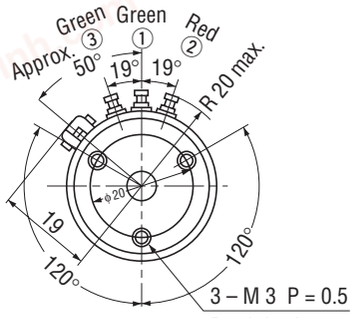

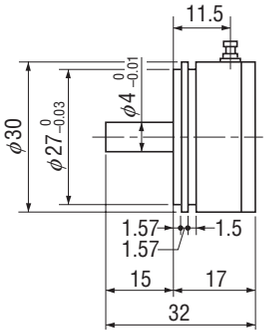

● JC40S

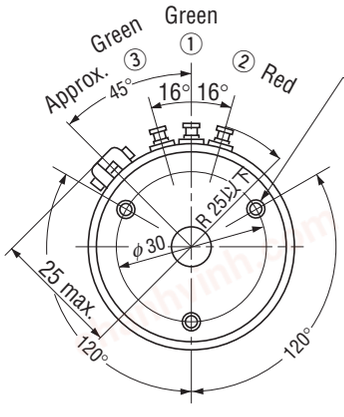

3 - M 3 (P = 0.5)
D = 3.0 min.

