chanhvinh.com

SINGLE TURN CERMET TRIMMERS FT-63

RoHS compliant

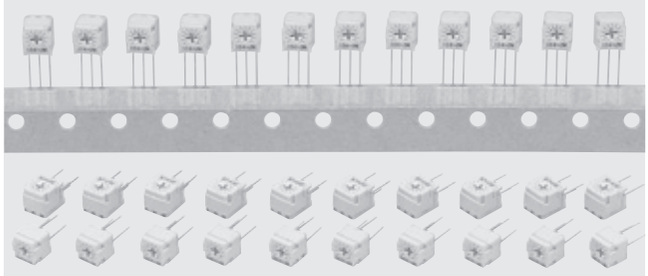

■ FEATURES

- RoHS compliant
- Resistance tolerance ± 10 %
- “O” ring sealed (Washable: Refer to 698)
- Suitable for automatic insertion and automatic adjustment
- Increase in the level of characteristics in the high-frequency field (In house comparison)
- Resin material is UL Recognized 94V-0

INTERNAL STRUCTURE

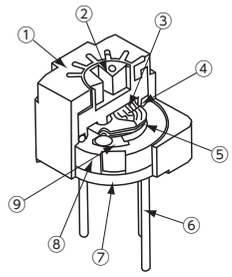

Part name		Material
①	Housing	Polybutyleneterephthalate
②	Rotor	
③	Wiper	Nickel silver
④	“O” ring	Silicone rubber
⑤	Resistive element	RuO_2 cermet
⑥	Terminal pin	Copper, Tin-plated
⑦	Adhesive	Epoxy
⑧	Base element	Ceramic
⑨	Electrode	Ag-Pd cermet

■ PART NUMBER DESIGNATION

FT-63 E T V 5kΩ (502)

- Series name
- Terminal pin
  - E : Sn (Lead-free)
- Form of packaging
  - T : Taping (Ammo pack type)
  - Blank : Bulk in plastic bag
- Product shape
  - P : Top adjustment
  - V : Top adjustment
  - S : Side adjustment
  - X : Side adjustment
  - H : Side adjustment
  - N : Side adjustment
- Resistance value
- Resistance code

※ Please refer to the LIST OF PART NUMBERS when placing orders.

chanhvinh.com

FT-63
CERMET TRIMMERS

■ LIST OF PART NUMBERS

Adjustment position	Form of packaging	
	Taping (Ammo pack type)	Plastic bag
Top adjustment	FT-63ETP	FT-63EP
	FT-63ETV	FT-63EV
Side adjustment	FT-63ETS	FT-63ES
		FT-63EX
	FT-63ETH	FT-63EH
		FT-63EN

⊘ : Not manufactured

〈Nominal resistance values〉 Fig. 1

⊖ 10 Ω	⊖ 20 Ω	50 Ω	100 Ω	200 Ω	300 Ω	500 Ω
1 kΩ	2 kΩ	3 kΩ	5 kΩ	10 kΩ	20 kΩ	30 kΩ
50 kΩ	100 kΩ	200 kΩ	300 kΩ	500 kΩ	1 MΩ	2 MΩ

※ The above part numbers are all available with the respective combination of <Nominal resistance values> (Fig. 1).
※ Verify the above part numbers when placing orders.
※ Taping specification is not sold separately and must be purchased in taping unit.
The products indicated by⊖mark are manufactured upon receipt of order basis.

■ ELECTRICAL CHARACTERISTICS

Nominal resistance range	10 Ω ~ 2 MΩ
Resistance tolerance	± 10 %
Power ratings	0.5 W (70 °C) 0 W (125 °C)
Resistance law	Linear law
Maximum input voltage	DC200 V or power rating, whichever is smaller
Maximum wiper current	Power ratings
Effective electrical angle	220 ° (1 turn)
End resistance	1 % or 2 Ω , whichever is greater
C.R.V.	2 % or 3 Ω , whichever is greater
Operating temp. range	−55 ~ 125 °C
Temp. coefficient	10 Ω ~ 20 Ω : ± 150 10^{-6}/°C maximum 50 Ω ~ 2 MΩ : ± 100 10^{-6}/°C maximum
Insulation resistance	1000 MΩ minimum (DC500 V)
Dielectric strength	AC900 V, 60 s
Net weight	Approx. 0.52 g (FT-63EP, EV) Approx. 0.66 g (FT-63ES, EH, EX, EN)

■ MECHANICAL CHARACTERISTICS

Mechanical angle	260 ° (1 turn)
Operating torque	20 mN·m {204 gf·cm} maximum
Stop strength	50 mN·m {510 gf·cm} minimum
Rotational life	100 cycles [ΔR/R ≦ ± (2 Ω +3 %)]
Terminal strength	10 N {1.02 kgf} minimum (Tensile strength)
Thrust to rotor	10 N {1.02 kgf} minimum
Solderability	245 ± 3 °C, 2 ~ 3 s

{ } : Reference only

chanhvinh.com

FT-63
CERMET TRIMMERS

■ ENVIRONMENTAL CHARACTERISTICS

Test item	Test conditions	Specifications
Thermal shock	−65 ~ 125 °C (0.5 h), 5 cycles	[ΔR/R ≦ 1 %] [S.S. ≦ 1 %]
Humidity	−10 ~ 65 °C (80 ~ 98 %), 10 cycles, 240 h	[ΔR/R ≦ 2 %]
Shock	981 m/s², 6 ms 6 directions for 3 times each	[ΔR/R ≦ 1 %] [S.S. ≦ 1 %]
Vibration	(Amplitude) 1.52 mm or (Acceleration) 196 m/s², 10 ~ 2000 Hz, 3 directions, 12 times each	
Load life	70 °C, 0.5 W 1000 h	[ΔR/R ≦ 3 %] [S.S. ≦ 1 %]
Low temp. operation	−55 °C, 2 h	[ΔR/R ≦ 2 %] [S.S. ≦ 2 %]
High temp. exposure	125 °C, 250 h	[ΔR/R ≦ 3 %] [S.S. ≦ 2 %]
Immersion seal	85 °C, 60 s	No leaks (No continuous bubbles)
Soldering heat	Flow 260 ± 3 °C, 5 ~ 6 s, two times maximum Manual soldering 380 ± 10 °C, 3 ~ 4 s	[ΔR/R ≦ 1 %]

ΔR/R : Change in total resistance
S.S. : Setting stability

■ MAXIMUM INPUT RATINGS

Nominal resistance values (Ω)	Resistance code	Maximum input voltage (V)	Maximum wiper current (mA)
⊖ 10	100	2.24	223
⊖ 20	200	3.16	158
50	500	5.00	100
100	101	7.07	70.7
200	201	10.0	50.0
300	301	12.2	40.8
500	501	15.8	31.6
1 k	102	22.4	22.4
2 k	202	31.6	15.8
3 k	302	38.7	12.9
5 k	502	50.0	10.0
10 k	103	70.7	7.07
20 k	203	100	5.00
30 k	303	122	4.08
50 k	503	158	3.16
100 k	104	200	2.00
200 k	204	200	1.00
300 k	304	200	0.66
500 k	504	200	0.40
1 M	105	200	0.20
2 M	205	200	0.10

The products indicated by ⊖ mark are manufactured upon receipt of order basis.

chanhvinh.com

FT-63
CERMET TRIMMERS

OUTLINE DIMENSIONS

Unless otherwise specified, tolerance: ± 0.3 (Unit: mm)

FT-63EP
Top adjustment

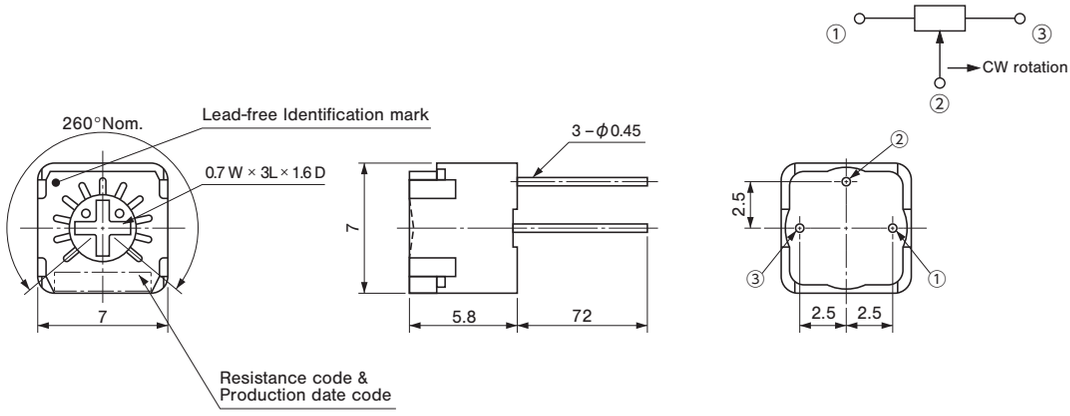

FT-63ES
Side adjustment

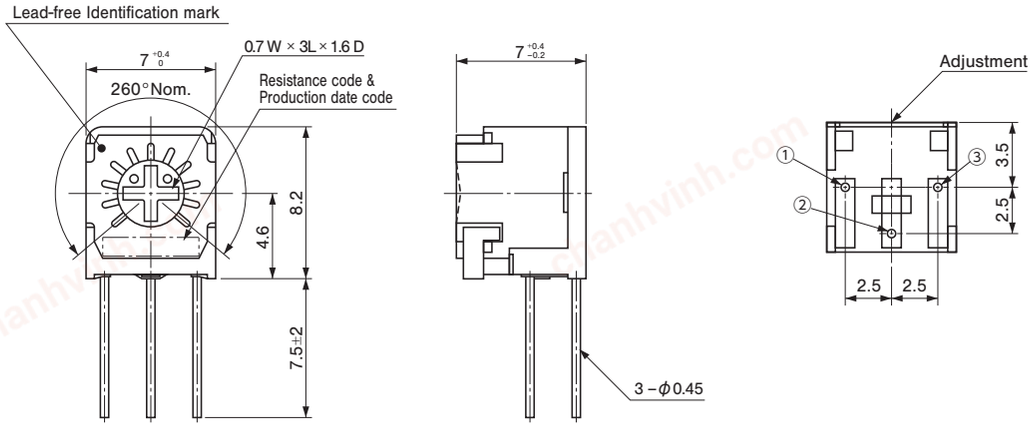

FT-63EX
Side adjustment

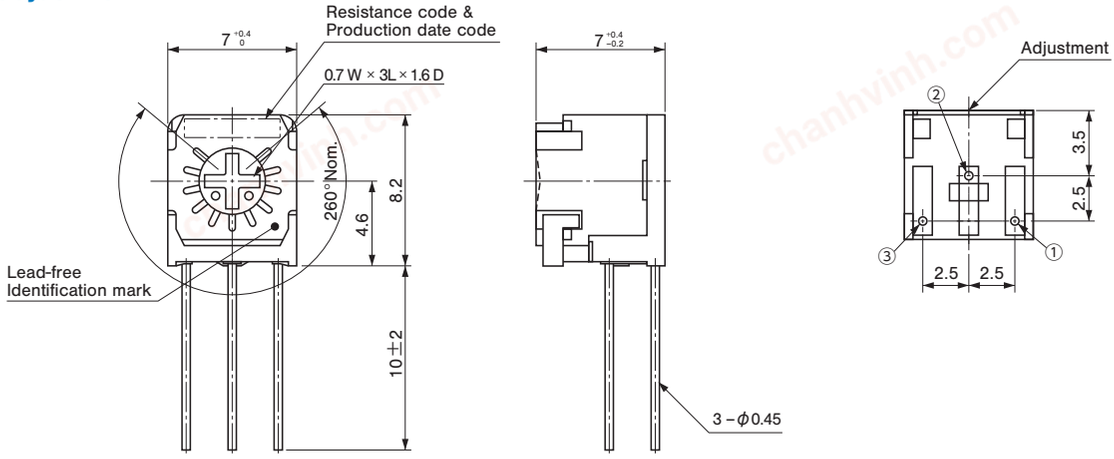

chanhvinh.com

FT-63
CERMET TRIMMERS

OUTLINE DIMENSIONS

Unless otherwise specified, tolerance: ± 0.3 (Unit: mm)

FT-63EV
Top adjustment

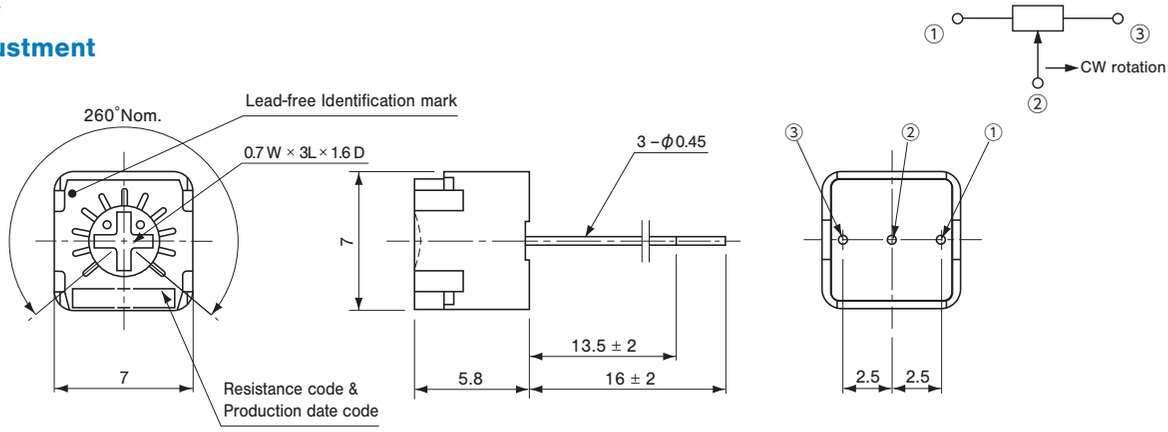

FT-63EH
Side adjustment

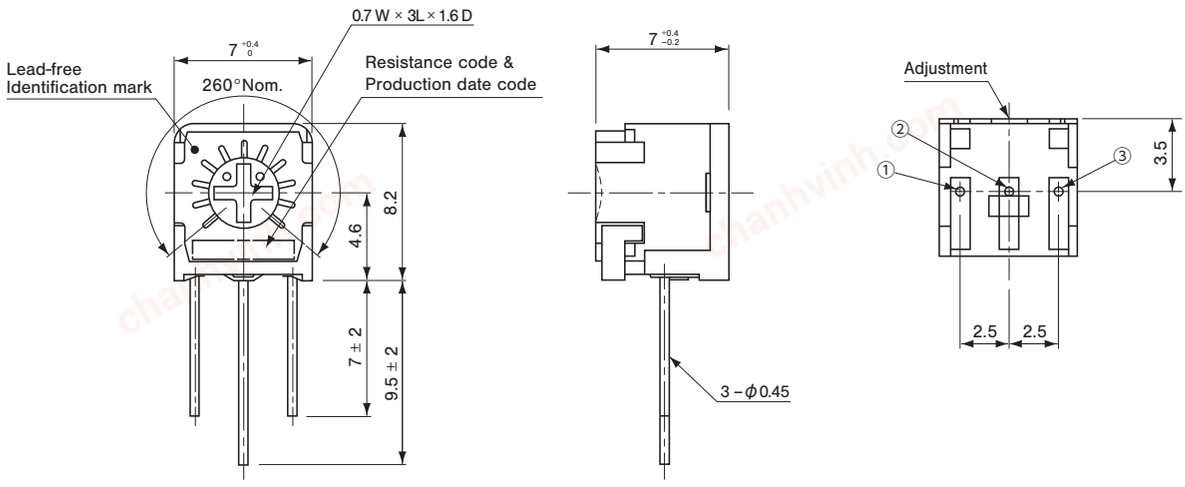

FT-63EN
Side adjustment

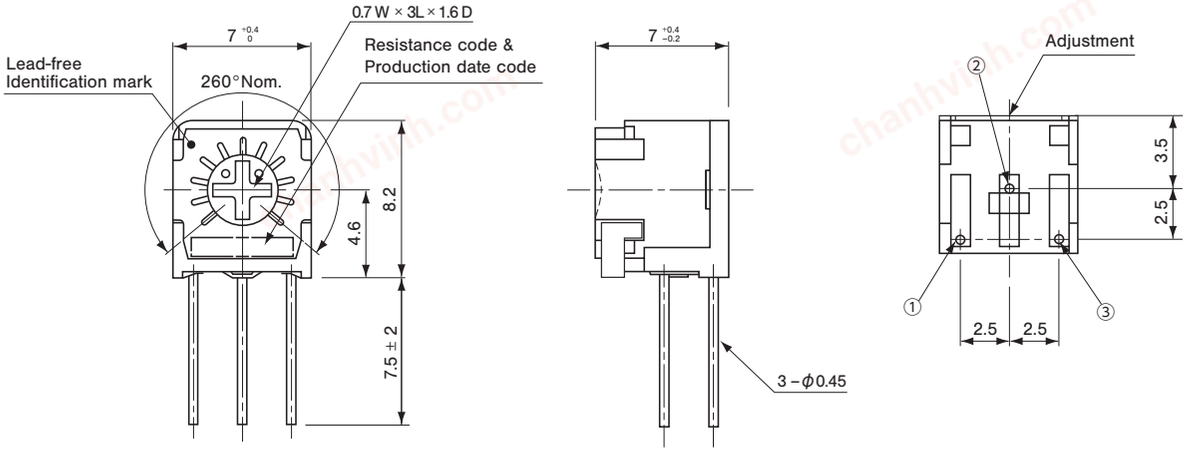

★ Terminals 1 & 3 position in N type is different from X type.

chanhvinh.com

FT-63
CERMET TRIMMERS

OUTLINE DIMENSIONS

Unless otherwise specified, tolerance: ± 0.3 (Unit: mm)

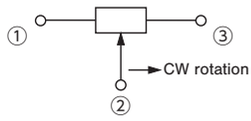

FT-63ETV
Top adjustment

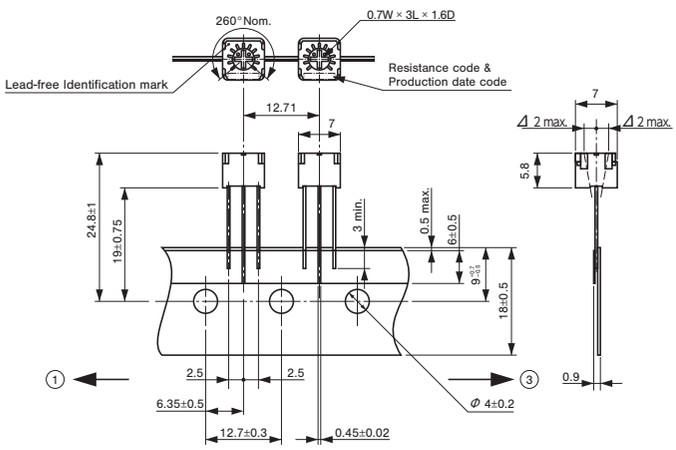

FT-63ETP
Top adjustment

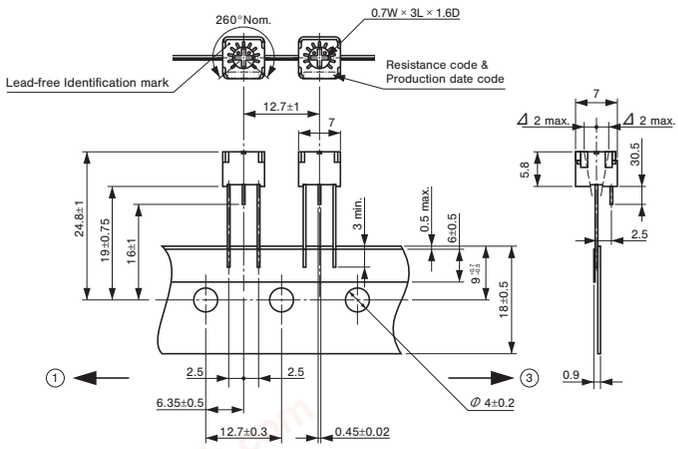

FT-63ETH
Side adjustment

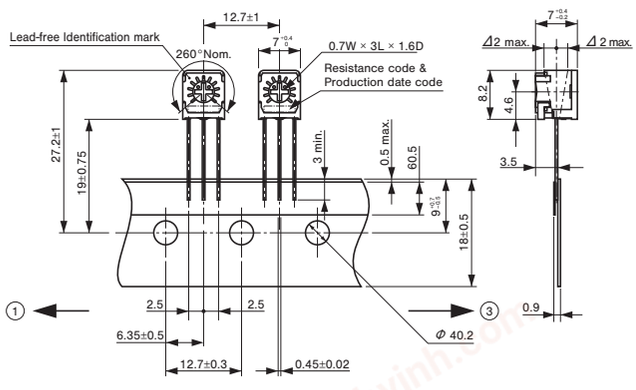

FT-63ETS
Side adjustment

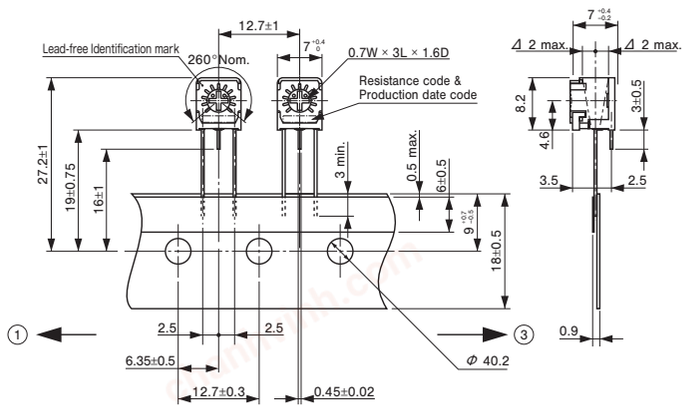

chanhvinh.com

■PACKAGING SPECIFICATIONS

<Taping packaging specifications>

- Taping version is packaged in 1000 pcs. per reel.
  Orders will be accepted for units of 1000 pcs., i.e., 1000, 2000, 3000 pcs., etc.
- Tape & reel version contains 1000 pcs. in one box.

<Bulk pack specifications>

- Unit of bulk pack in a plastic bag is 100 pcs. per pack.
- Boxing of bulk in a plastic bag is performed with 1000 pcs. per box.

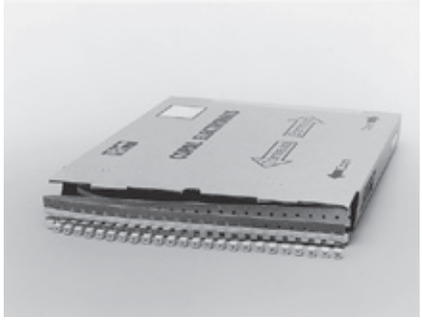

Ammo pack type

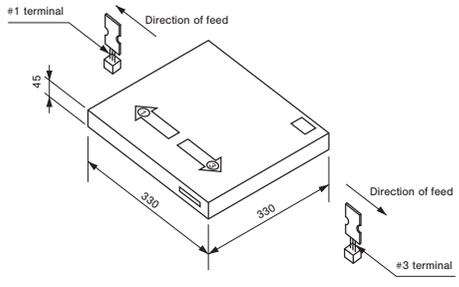

Ammo Pack

- Package size: 330 mm × 330 mm × 45 mm
- The leader and end of the tape have an empty part of minimum 300 mm respectively.
- There are two tape outlets on the package for different terminal alignment directions, for which details refer to the sketch above.
  (e.g.) When the tape is fed from the right outlet marked 3, #3 terminal comes out first.
- Gross weight of the boxing version
  ETV : Approx. 850 g
  ETH : Approx. 940 g
  ETP : Approx. 820 g
  ETS : Approx. 940 g