chanhvinh.com

ELW

AC Rated Miniature Rocker Switches

Dustproof

RoHS Compliant



■Features

1. Improved environmental resistance
   Front panel seal: IP67 of IEC60529
   Behind panel seal: IP60 of IEC60529
2. Epoxy sealed terminals
3. Snap-in panel mounting
4. Recommended for equipment used outdoors
5. cULus Recognized

■ Specifications

Rating	15 A @127 VAC 10 A @250 VAC
Initial contact resistance	20 mΩ max. (1A 2～4 VDC)
Dielectric strength	1500 VAC 1 minute
Insulation resistance	100 MΩ min. (500 VDC)
Operating force	4 ± 2 N
Electrical life	25,000 cycles
Operating temperature range	−10°C～+70°C
Storage temperature range	−20°C～+80°C

■Part Number Designation

E L W — Series code

1 — Number of poles

1	1pole

15 — Current capacity

15	15 A

E — Switching function

A	ON - OFF
D	ON - ON
E	ON - OFF - ON
G	(ON) - OFF - (ON))

12 — Number of positions

12	Solder terminal

■List of Part Numbers

Part No.	Switching function	No. of poles	Terminals
ELW115A12	ON - OFF	1 pole	Solder
ELW115D12	ON - ON		
ELW115E12	ON - OFF - ON		
ELW115G12	(ON) - OFF - (ON)		

■Switching Function

A	ON	—	OFF
Connect terminals	1-3	—	—
D	ON	—	ON
E	ON	OFF	ON
G	(ON)	OFF	(ON)
Connect terminals	2-3	—	2-1

(ON) : Momentary

chanhvinh.com

■Outline Dimensions

(Unit:mm)

●ELW115A12

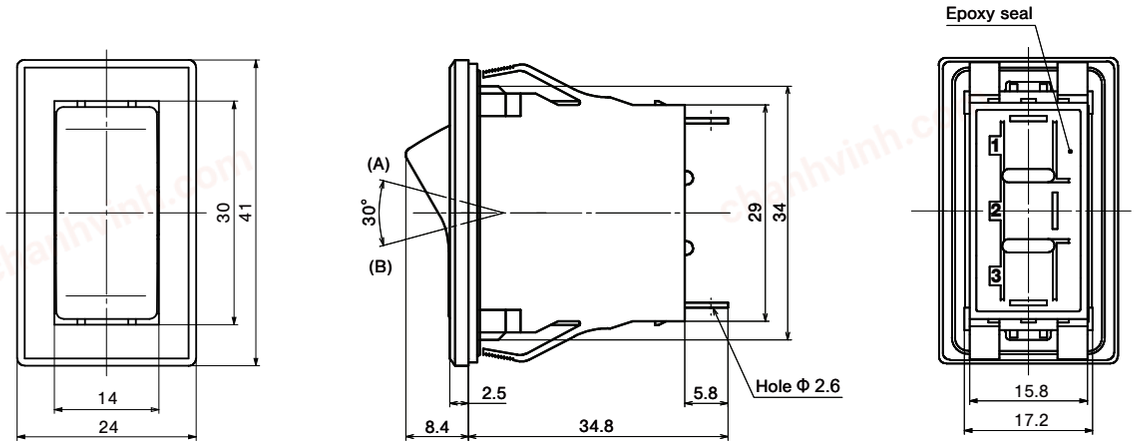

●ELW115D12

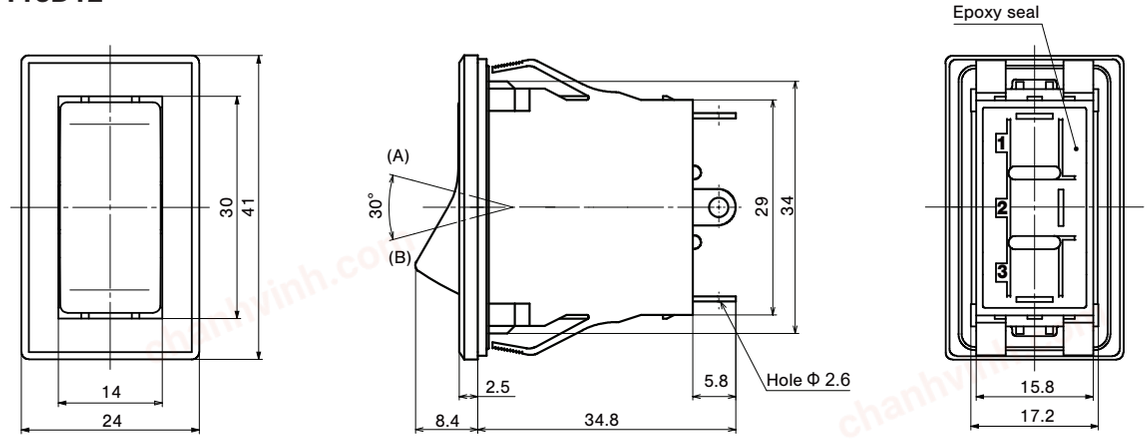

●ELW115E12/ELW115G12

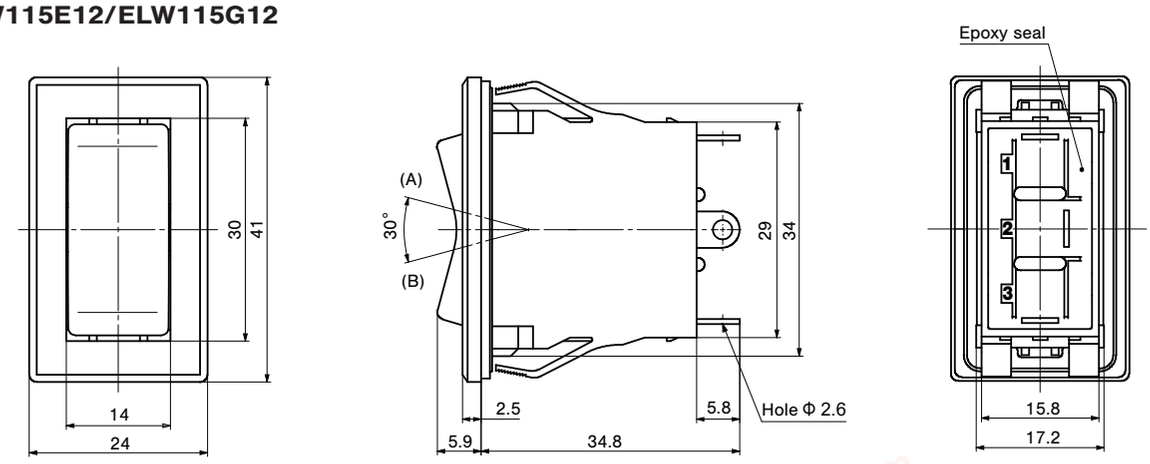

■Panel Cut-Out Dimensions

(Unit:mm)

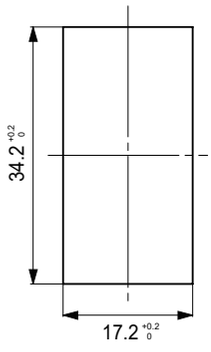

Applicable panel thickness: 1 to 3 mm