chanhvinh.com

COMPACT SLIDE SWITCHES CSS

RoHS compliant

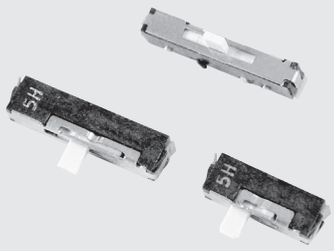

INTERNAL STRUCTURE

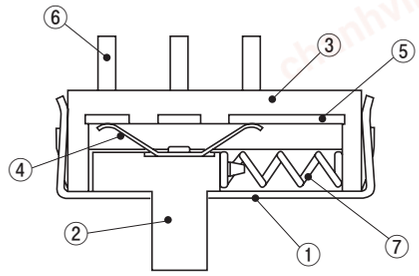

Part name		Material	Flammability
①	Cover	Stainless steel (SUS 304)	—
②	Slider	Liquid Crystal polymer	UL94V-0
③	Housing		
④	Slider contact	Copper alloy, Gold-plated	—
⑤	Fixed contact		
⑥	Terminal pin		
⑦	Return spring	SWP	

FEATURES

- Low-profile of 2 mm
- Self-return type available
- RoHS compliant

APPLICATIONS

- Mobile stereo · LCD TV · Camcorder

PART NUMBER DESIGNATION

C S S - 1 2 1 1 T B

Series name

No. of poles
1 : 1 pole

No. of contacts
2 : 2 contacts
3 : 3 contacts

Setting position
0 : Top setting
1 : Side setting

Shape of terminal
B : Gull wing
C : Through hole pins

Form of packaging
T : Taping
M : Magazine

Self-return function
0 : No function
1 : Single
2 : Double

※ Please refer to the LIST OF PART NUMBERS when placing orders.

chanhvinh.com

CSS
COMPACT SLIDE SWITCHES

LIST OF PART NUMBERS

No. of contacts	Setting position	Self-return function	Shape of terminal	Form of packaging	Part number	Pieces in package
2	Side setting	No function	B (Gull wing)	Taping	CSS-1210TB	1,900 pcs./reel
			C (Through hole pins)	Magazine	CSS-1210MC	53 pcs./stick
		Single	B (Gull wing)	Taping	CSS-1211TB	1,900 pcs./reel
			C (Through hole pins)	Magazine	CSS-1211MC	53 pcs./stick
3	Side setting	No function	B (Gull wing)	Taping	CSS-1310TB	1,900 pcs./reel
			C (Through hole pins)	Magazine	CSS-1310MC	38 pcs./stick
		Single	B (Gull wing)	Taping	CSS-1311TB	1,900 pcs./reel
			C (Through hole pins)	Magazine	CSS-1311MC	38 pcs./stick
		Double	B (Gull wing)	Taping	CSS-1312TB	1,900 pcs./reel
			C (Through hole pins)	Magazine	CSS-1312MC	38 pcs./stick
	Top setting	No function	C (Through hole pins)	Magazine	CSS-1300MC	38 pcs./stick
		Double	C (Through hole pins)	Magazine	CSS-1302MC	38 pcs./stick

STANDARD SPECIFICATIONS

Operating temp. range	− 20 ~ 70 °C
Storage temp. range	− 40 ~ 85 °C
Sealing	Non- Washable
Net weight	Approx. 0.11 g (CSS-12), Approx. 0.15 g (CSS-13)

MECHANICAL CHARACTERISTICS

No. of positions	2, 3
Stroke	2 mm
Operating force	1 ~ 3.5 N {0.1 ~ 0.36 kgf}
Stop strength	10 N {1.02 kgf} 15 s（操作方向）
Solderability	245 ± 3 °C 2 ~ 3 s Sn-3Ag-0.5Cu
Soldering heat	Reflow：250 ~ 255 °C (Peak temperature) （Please refer to the profile below）
	Manual soldering：350 ± 10 °C, 3 ~ 4 s
Shear (Adhesion)	5 N {0.5 kgf} 10 s
Substrate bending	Width 90 mm, bend 3 mm, 5 s, 1 time
Pull-off strength	5 N {0.5 kgf} 10 s

{ } : Reference only

ELECTRICAL CHARACTERISTICS

Contact rating	Non-switching : DC50 V 100 mA Switching : DC12 V 100 mA Minimum : DC20 mV 1 μA
Contact timing	Non-shorting
Contact resistance	70 m Ω maximum
Insulation resistance	100 M Ω minimum (DC 500 V)
Dielectric strength	AC500 V 60 s

ENVIRONMENTAL CHARACTERISTICS

Vibration	Amplitude 1.5 mm or Acceleration 98 m/s^2, 10-500-10 Hz, 3 directions for 10 cycles each
Shock	490 m/s^2, 11 ms, 6 directions for 3 times each
Load life	Continuous load 10000 cycles, DC12 ± 0.5 V, 100 ± 10 mA
Humidity	40 °C, Relative humidity 90 ~ 95 %, 240 h, No load
High temp. exposure	85 °C, 96 h, No load
Low temp. exposure	− 40 °C, 96 h, No load
Thermal shock	− 40 (0.5 h) ~ 85 °C (0.5 h), 5 cycles

〈Reflow profile for soldering heat evaluation〉

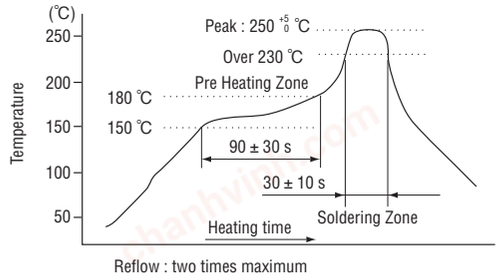

Reflow : two times maximum

chanhvinh.com

CSS
COMPACT SLIDE SWITCHES

OUTLINE DIMENSIONS

Unless otherwise specified, tolerance : ± 0.2 (Unit : mm)

● CSS-1210B

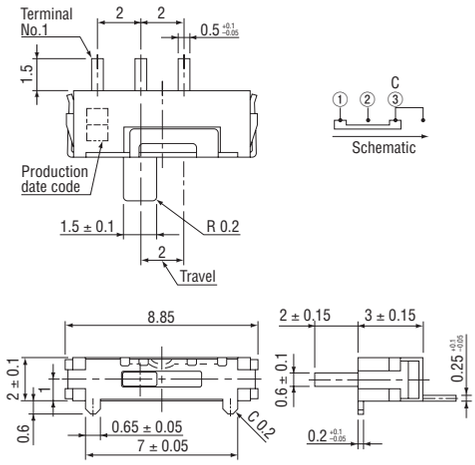

● CSS-1211B

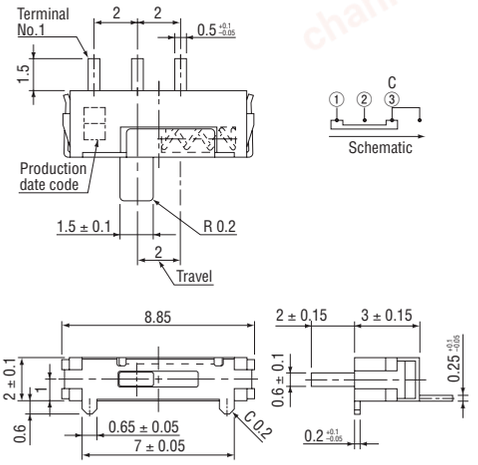

● CSS-1310B

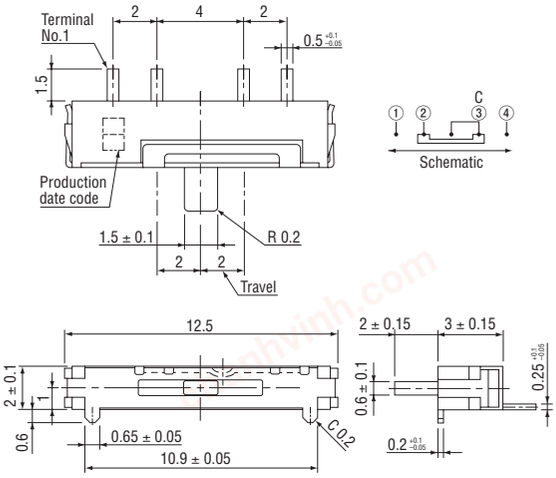

● CSS-1311B

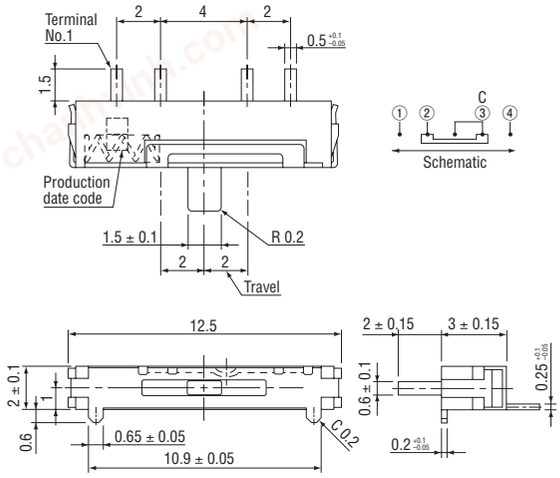

● CSS-1312B

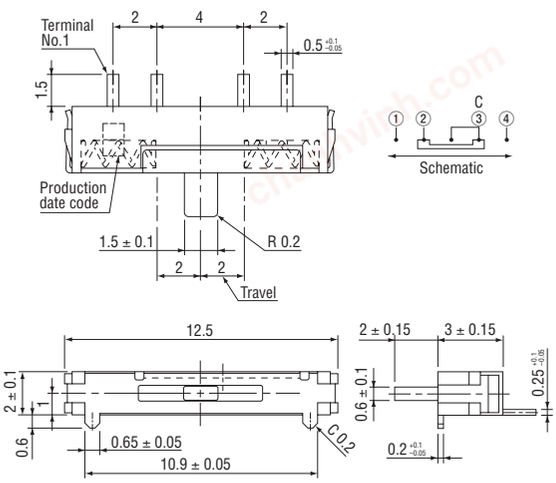

● CSS-1210C

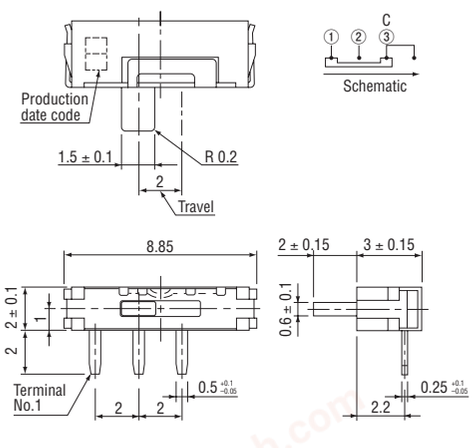

chanhvinh.com

CSS
COMPACT SLIDE SWITCHES

OUTLINE DIMENSIONS

Unless otherwise specified, tolerance : ± 0.2 (Unit : mm)

● CSS-1211C

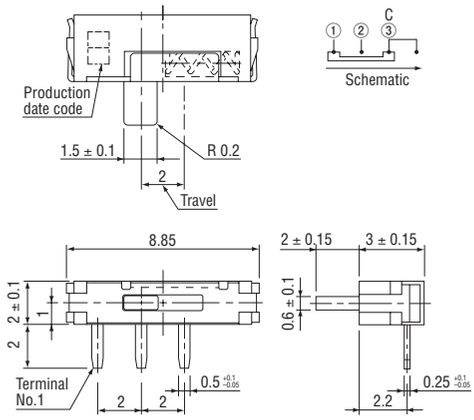

● CSS-1310C

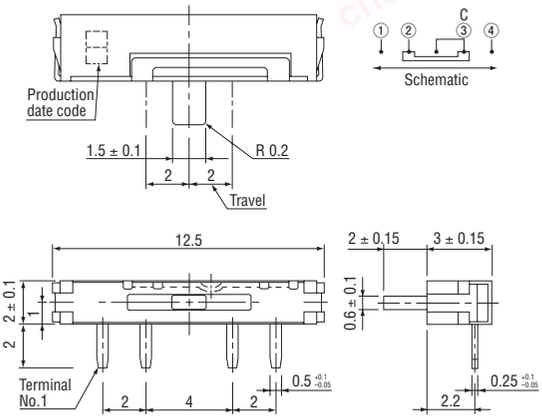

● CSS-1311C

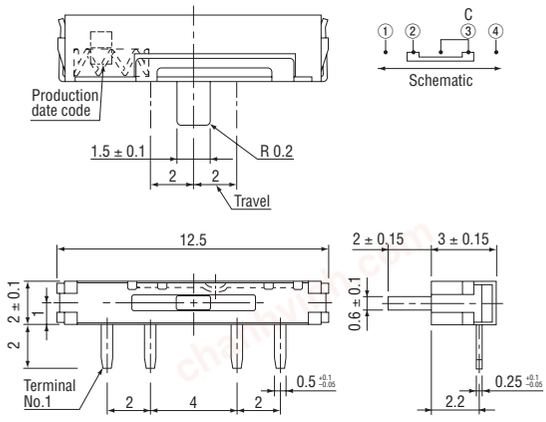

● CSS-1312C

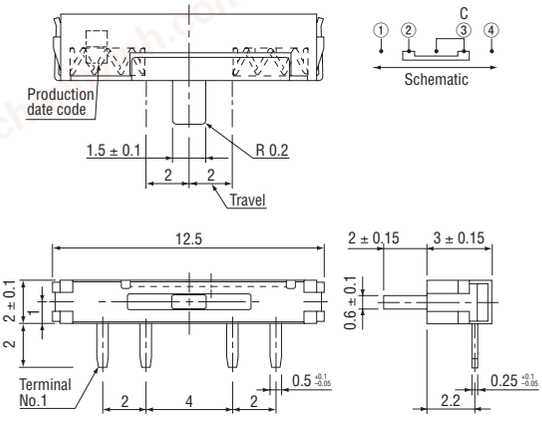

● CSS-1300C

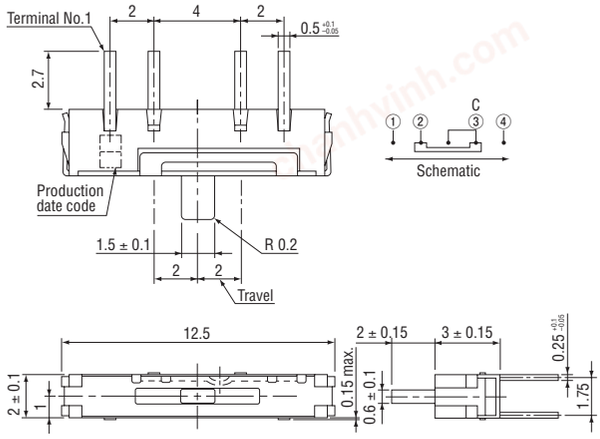

● CSS-1302C

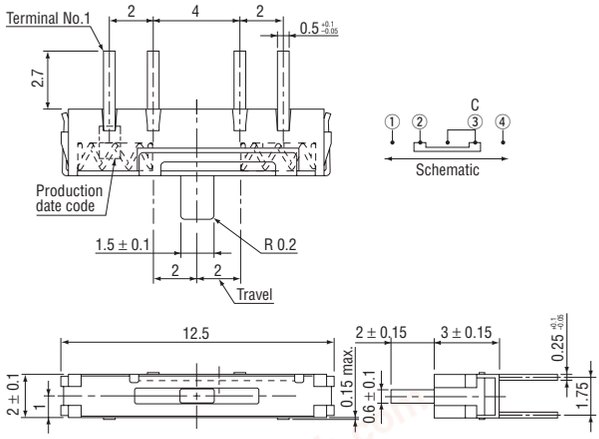

chanhvinh.com

CSS
COMPACT SLIDE SWITCHES

RECOMMENDED P.C.B. PAD OUTLINE DIMENSIONS

● CSS-121 □ B ● CSS-131 □ B (Unit : mm)

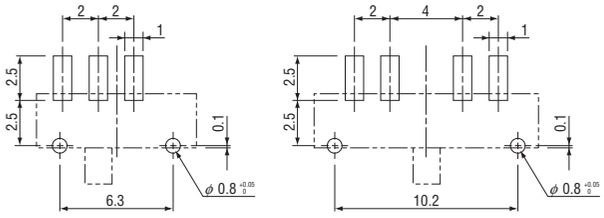

SIZE OF P.C.B. PROCESSING

● CSS-121 □ C

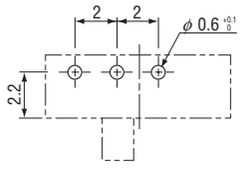

● CSS-131 □ C ● CSS-130 □ C

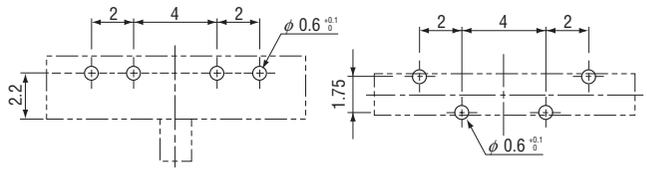

PACKAGING SPECIFICATIONS

Taping version is packaged in 1900 pcs. par reel.
Taping version is boxed with 1 reel (1900 pcs.).
Maximum number of consecutive missing pieces = 2.
Leader length and reel dimension are shown in the diagrams below.

Embossed tape dimensions

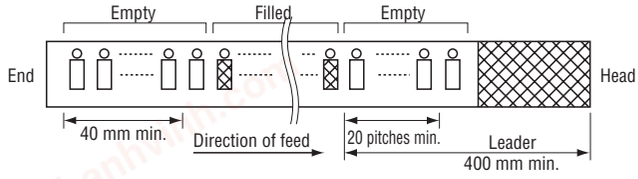

● CSS-121 □ TB

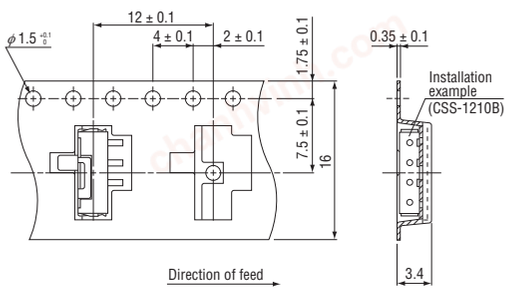

● CSS-131 □ TB

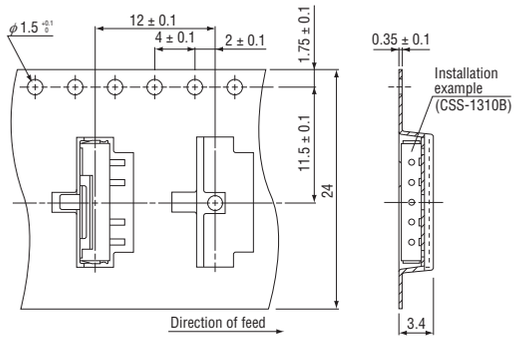

● Reel dimensions (Unit: mm)

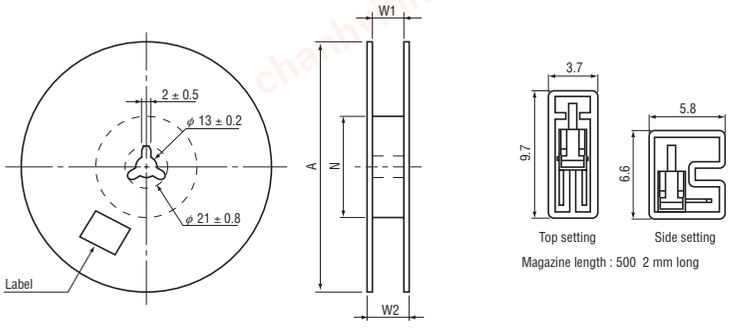

Part number	A	W_1	W_2	N
121 □ TB	ϕ 330 ± 2	17.4 ± 1	21.4 ± 1	ϕ 80 ± 1
131 □ TB	ϕ 330 ± 2	25.4 ± 1	29.4 ± 1	ϕ 80 ± 1

Packing quantity of magazine

Part number	Quantity / Stick
12 □□	53
13 □□	38