chanhvinh.com

ROTARY SELECTOR SWITCHES (SMD) CS-7

RoHS compliant

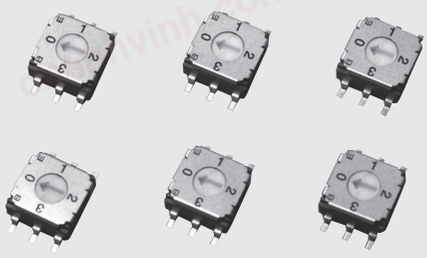

INTERNAL STRUCTURE

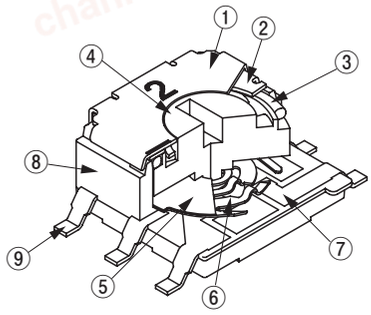

	Part name	Material	Flammability
①	Marking cover	Stainless steel (SUS 304)	—
②	Cover	Stainless steel (SUS 301)	
③	“O” ring	Silicone rubber	UL94HB
④	Rotor	Polyphenylenesulphide	UL94V-0
⑤	Spacer	Stainless steel (SUS 304)	—
⑥	Slider contact	Copper alloy, Gold-plated	
⑦	Fixed contact		
⑧	Housing	Polyphenylenesulphide	UL94V-0
⑨	Terminal pin	Copper alloy, Gold-plated	—

FEATURES

- RoHS compliant
- Easy position setting with wide switching angle
- High digit visibility
- Washable

PART NUMBER DESIGNATION

CS-7 - 1 4 T B

- Series name
- No. of poles
  1 : 1 pole
- No. of contacts
  4 : 4 contacts
- Form of packaging
  T : Taping (Reel)
  M : Magazine
- Shape of terminal
  B : Gull wing

※ Please refer to the LIST OF PART NUMBERS when placing orders.

chanhvinh.com

CS-7
ROTARY SELECTOR SWITCHES (SMD)

LIST OF PART NUMBERS

Circuit type	Setting position	Form of packaging	B Gull wing	Pieces in package
1 pole 4 contacts	Top setting	Taping	CS-7-14TB	500 pcs./reel
		Magazine	CS-7-14MB	50 pcs./stick

※ Verify the above part numbers when placing orders.Taping and magazine version can be supplied only in reel or stick unit.

STANDARD SPECIFICATIONS

Circuit type	1 pole 4 contacts
Operating temperature range	–40 ~ 85 °C
Storage temperature range	
Sealing	Washable by "O"ring ※ Please refer to page 150, 151
Net weight	Approx. 0.38 g

ELECTRICAL CHARACTERISTICS

Contact rating Non-switching Switching Minimum	DC50 V 100 mA DC5 V 100 mA DC20 mV 1 μA
Contact resistance	100 mΩ maximum
Insulation resistance	1000 MΩ (DC100 V) minimum
Dielectric strength	AC250 V, 60 s

MECHANICAL CHARACTERISTICS

No. of positions	4
Adjustment torque	3~20 mN·m {31~204gf·cm}
Stepping angle	90°
Solderability	245 ± 3 °C, 2 ~ 3 s
Soldering heat	Reflow : Peak temperature 250°C to 255 °C (Please refer to the profile below)
	Manual soldering : 350 ± 10 °C, 3 ~ 4 s
Shear (adhesion)	5 N {0.51 kgf} 10 s
Substrate bending	Width 90 mm, bend 3 mm, 5 s, 1 time
Pull-off strength	5 N {0.51 kgf} 10s

{ } : Reference only

ENVIRONMENTAL CHARACTERISTICS

Vibration	(Amplitude) 1.5 mmor (Acceleration) 98 m/s^2, 10-500-10 Hz, 3 directions for 2 h each
Shock	490 m/s^2, 11 ms 6 directions for 3 times each
Load life	10000 steps minimum, DC5 V, 100 mA
Humidity (Steady state)	40 °C, Relative humidity 90 ~ 95 %, 240 h
High temperature exposure	85 °C, 96 h
Low temperature exposure	–40 °C, 96 h
Thermal shock	–40 (0.5 h) ~ 85 °C (0.5 h), 5 cycles

chanhvinh.com

CS-7
ROTARY SELECTOR SWITCHES (SMD)

〈Reflow profile for soldering heat evaluation〉

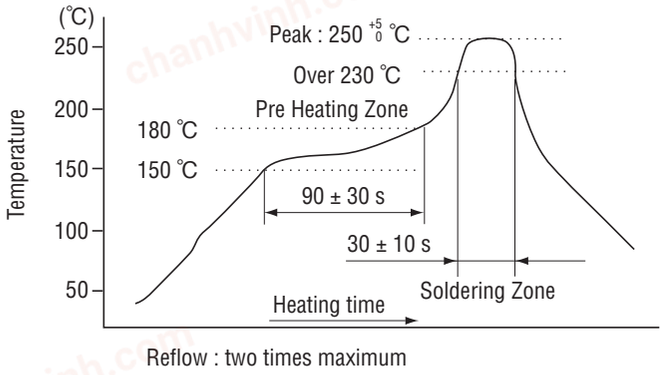

Reflow : two times maximum

■ OUTLINE DIMENSIONS

Unless otherwise specified, tolerance: ± 0.3 (Unit: mm)

● CS-7-14B

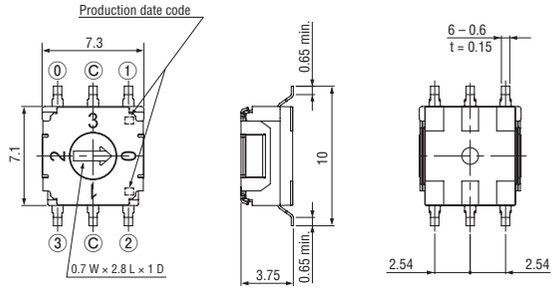

■ RECOMMENDED P.C.B. PAD OUTLINE DIMENSIONS

● CS-7-14B

(Unit: mm)

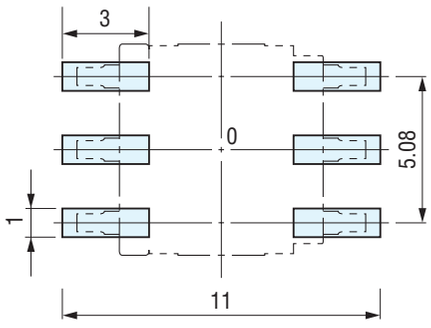

chanhvinh.com

PACKAGING SPECIFICATIONS

<Taping packaging specifications>

- Taping version is packaged in 500 pcs. per reel. Orders will be accepted for units of 500 pcs., i.e., 500, 1000, 1500, pcs., etc.
- Taping version is boxed with one reel (500 pcs.).

Maximum number of consecutive missing pieces = 2
Leader length and reel dimension are shown in the diagrams below:

● Embossed tape dimensions

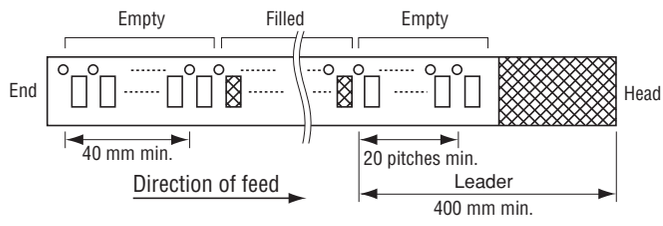

● Reel dimensions

(Unit: mm)

(Conforms to JIS C 0806-3)
(In accordance with EIAJ ET-7200A)

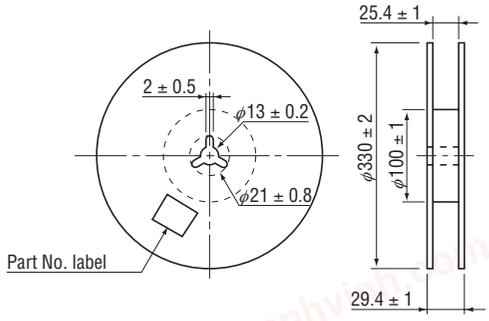

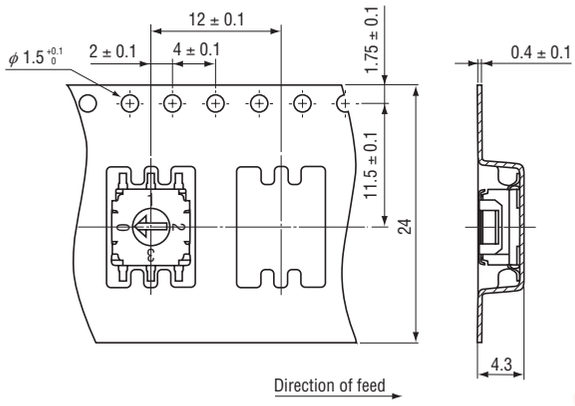

chanhvinh.com

CS-7
ROTARY SELECTOR SWITCHES (SMD)

■ PACKAGING SPECIFICATIONS

<Magazine packaging specifications>

● Please order the multiple numbers of the specific packing quantities.

Pieces in package : 50 pcs./stick

● Magazine dimensions

(Unit : mm)

