chanhvinh.com

SLIDE SWITCHES

CRFS

RoHS compliant

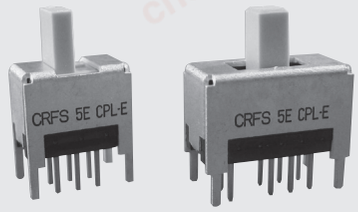

FEATURES

- RoHS compliant
- Covering the DC ~ 1 GHz frequency spectrum
- Gold-plated contact provides excellent reliability

APPLICATIONS

- Communication devices
- Broadcast equipment
- FA equipment

INTERNAL STRUCTURE

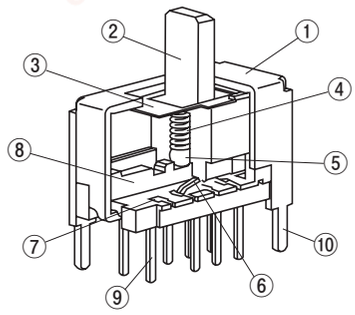

	Part name	Material	Flammability
①	Cover	Steel (SPCC), Tin-plated	—
②	Slider	Polyamide	UL94V-0
③	Slider plate ※1	Polyester	—
④	Click spring	SWP	
⑤	Click ball	SUS	
⑥	Slider contact	Copper alloy, Gold-plated	
⑦	Fixed contact		
⑧	Housing	(Polyphenylenesulphide)	UL94V-0
⑨	Terminal pin	Copper alloy, Gold-plated	—
⑩	Ground terminal	Steel (SPCC), Tin-plated	

※1 : 2 poles 3 contacts only

PART NUMBER DESIGNATION

CRFS - 2 2 0 2 W

Series name

No. of poles
2 : 2 poles

No. of contacts
2 : 2 contacts
3 : 3 contacts

Setting position
0 : Top setting

Knob length
2 : 5 mm
4 : 10 mm

Form of packaging
W : Tray packaging
Blank : Bulk in plastic bag

※ Please refer to the LIST OF PART NUMBERS when placing orders.

chanhvinh.com

CRFS
SLIDE SWITCHES

LIST OF PART NUMBERS

Setting position	Shape of terminals	Knob length	Form of packaging	No. of contacts		Pieces in package
				2	3	
Top setting	Through hole pins	5 mm	Tray packaging	CRFS-2202W	CRFS-2302W	50 pcs./tray
			Bulk in plastic bag	CRFS-2202	CRFS-2302	25 pcs./pack
		10 mm	Tray packaging	CRFS-2204W	CRFS-2304W	50 pcs./tray
			Bulk in plastic bag	CRFS-2204	CRFS-2304	25 pcs./pack

STANDARD SPECIFICATIONS

Operating temp. range	− 40 ~ 85 °C
Storage temp. range	
Sealing	Non- Washable
Net weight	Approx. 1.4 g (CRFS-2202) Approx. 1.5 g (CRFS-2204) Approx. 1.9 g (CRFS-2302) Approx. 2.0 g (CRFS-2304)

ELECTRICAL CHARACTERISTICS

Contact rating	Non-switching : DC50 V 100 mA Switching : DC12 V 100 mA Minimum : DC20 mV 1 μ A
Contact timing	Non-shorting
Contact resistance	70 m Ω maximum
Insulation resistance	100 M Ω minimum (DC500 V)
Dielectric strength	AC500 V, 60 s

MECHANICAL CHARACTERISTICS

No. of positions	2, 3
Stroke	2 mm
Operating force	CFRS-22 □□ ※ 1 A ↔ B : 2.5 ± 1.5 N {0.255 ± 0.153 kgf} CFRS-23 □□ ※ 2 A → B / C → B : 1.5 ± 1 N {0.153 ± 0.102 kgf} B → A / B → C : 2.5 ± 1.5 N {0.255 ± 0.153 kgf}
Stop strength	30 N {3.06 kgf} 15 s
Solderability	245 ± 3 °C 2 ~ 3 s
Soldering heat	Flow : 260 ± 3 °C, 5 ~ 6 s, 2 times maximum
	Manual soldering : 380 ± 10 °C, 3 ~ 4 s

{ } : Reference only

ENVIRONMENTAL CHARACTERISTICS

Vibration	(Amplitude) 1.5 mmor (Acceleration) 98 m/s^2, 10-500-10 Hz, 3 directions for 10 cycles each
Shock	490 m/s^2, 11 ms, sinusoidal wave half cycle, 6 directions for 3 times each
Load life	Continuous load 10000 cycles, DC12 ± 0.5 V, 100 ± 10 mA
Humidity	40 °C, Relative humidity 90 ~ 95 %, 240 h, No load
High temp. exposure	85 °C, 96 h, No load
Low temp. exposure	− 40 °C, 96 h, No load
Thermal shock	− 40 (0.5 h) ~ 85 °C (0.5 h), 5 cycles

HIGH FREQUENCY CHARACTERISTICS

	CRFS-22 □□		CRFS-23 □□	
	770 MHz	1.0 GHz	770 MHz	1.0 GHz
Isolation between terminals	28 dB minimum	26 dB minimum	28 dB minimum	26 dB minimum
Isolation between circuits	30 dB minimum	28 dB minimum	31 dB minimum	29 dB minimum
Insertion loss	0.15 dB maximum	0.23 dB maximum	0.13 dB maximum	0.17 dB maximum
VSWR	1.2 maximum	1.3 maximum	1.3 maximum	1.3 maximum
Impedance	75 Ω			

※ 1

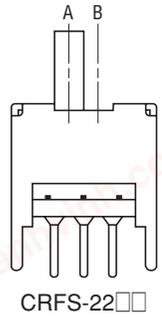

CRFS-22□□

※ 2

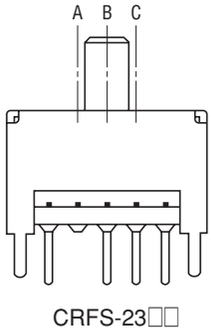

CRFS-23□□

chanhvinh.com

OUTLINE DIMENSIONS

Unless otherwise specified, tolerance : ± 0.3 (Unit : mm)

● CRFS-22□□

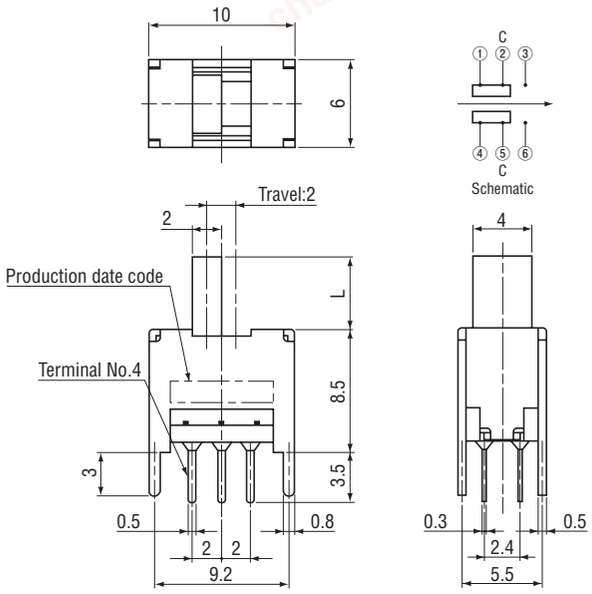

Model number	L (mm)
CRFS-2202	5
CRFS-2204	10

● CRFS-23□□

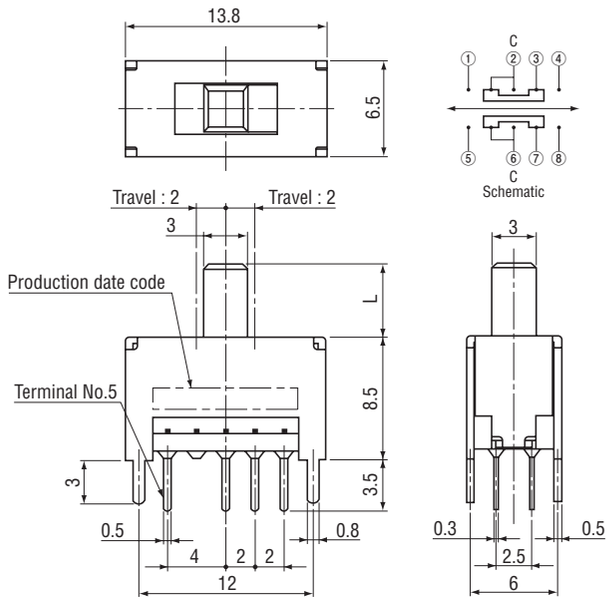

Model number	L (mm)
CRFS-2302	5
CRFS-2304	10

SIZE OF P.C.B. PROCESSING

(Unit : mm)

● CRFS-22□□

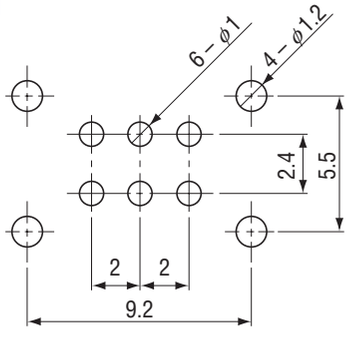

● CRFS-23□□

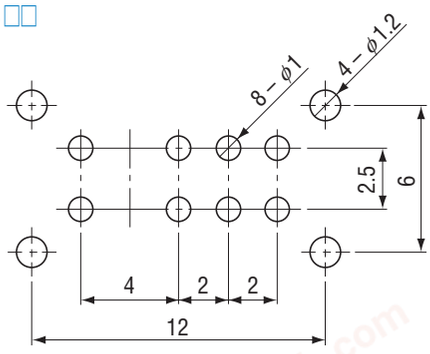

PACKAGING SPECIFICATIONS

<Tray packaging specifications>

- Tray version is packaged in 50 pcs. per tray. Orders will be accepted for units of 50 pcs., i. e., 50, 100, 150 pcs. etc.
- Tray version is boxed with 10 trays.

<Bulk pack specifications>

- The smallest unit of bulk in a plastic bag is 25 pcs. per pack. Orders will be accepted for unit of minimum 25 pcs., i.e., 25, 50, 75 pcs., etc.
- Boxing of bulk in a plastic bag is performed with 25 pcs. (standard 50 pcs.) per box.