chanhvinh.com

CFPA

Washable

RoHS Compliant

Surface Mount Pushbutton Switches



■Features

1. Compatible with Reflow Soldering
2. Washable
3. Gold-Plated Contacts for Low Current Application
4. Clip Contact Mechanism for High Contact Reliability

■ Specifications

Rating	Max.	0.4VA (28VDC max.) (Resistive load)
	Min.	1μA 20mDCV (Resistive load)
Initial contact resistance		80mΩ max. (1.5mA 1kHz 20mV min.)
Dielectric strength		500VAC 1 minute
Initial insulation resistance		500MΩ min.(500VDC)
Stroke		1.1 mm
Operating force		1.5N ± 1N
Electrical life		50,000 operations at max. rating
Switch timing		Non-shorting
Operating temperature range		−40℃～+85℃
Storage temperature range		−40℃～+85℃

■Part Numbering

CFPA — 1 F B4 — A 2 T

Series code & Acutuator

Code	Type
P	Pushbutton

Number of poles

Fig.	Number of poles
1	1 pole

Switching function

Code	Switching function
F	ON — (ON)

Terminal style

Fig.	Terminal style
B4	Gull wing R/A

Actuator shape

Code	Actuator shape
A	Standard

Contact material

Fig.	Contact material
2	Gold plated

Packaging specifications

Code	Packaging specifications
T	Taping
W	Tray

■Optional Accessories

《Sold separately》

Part Name	Dimensions	Color	Part Number
Coor Cap	Gloss finish 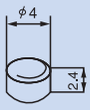 ABS resin	White	140000481453
		Red	140000481452
		Black	140000481451
		Gray	140000481450

■Color Cap Mounting

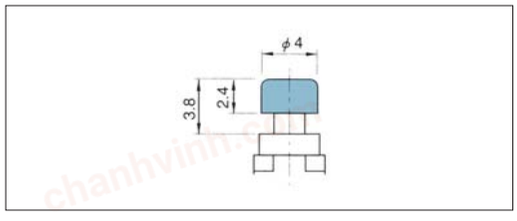

The color cap should be installed after the reflow soldering and washing process.

(ON) : Momentary.

chanhvinh.com

CFPA

■Switching function

Switching function / Part No.		
CFPA−1FB4−A2■	ON	(ON)
Connecting terminals	2−3	2−1

■ : Packing specifications T or W (ON) : Momentary

■Pad Layouts

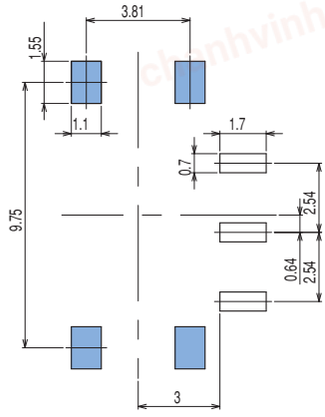

■Dimension

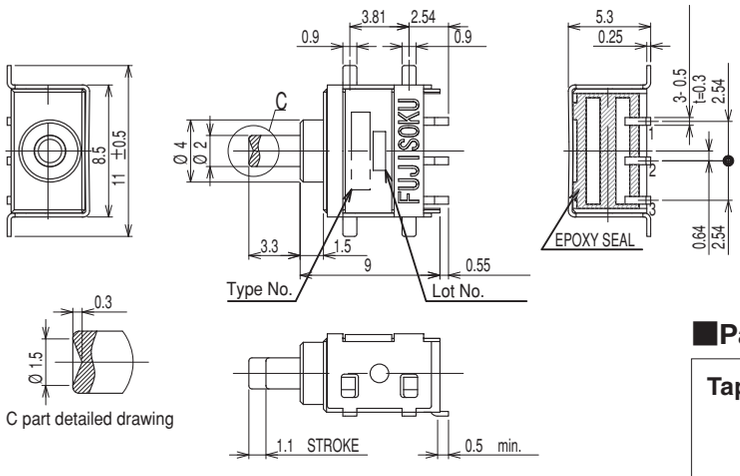

■Table of Part Numbers

Packaging specifications	Part No.
Taping	**CFPA−1FB4−A2T**
Tray	**CFPA−1FB4−A2W**

■Soldering Specifications

(1) Reflow Soldering

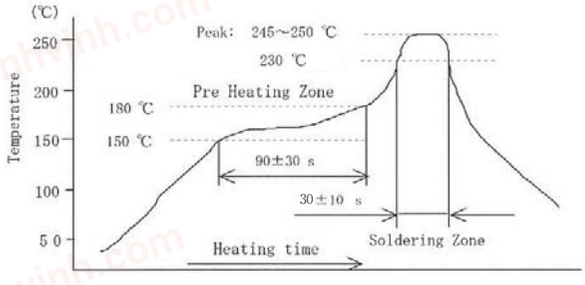

Apply reflow soldering: 2 times max.

(2) Manual Soldering

Device : Soldering iron

350℃, Max.; 3-4 seconds, Max.

■Packaging Specifications

Taping 500 pcs/reel

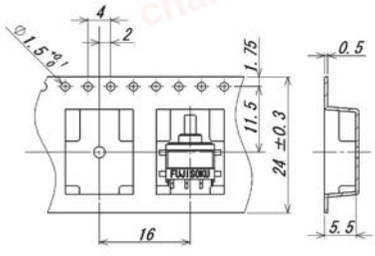

Tray 50 pcs/tray

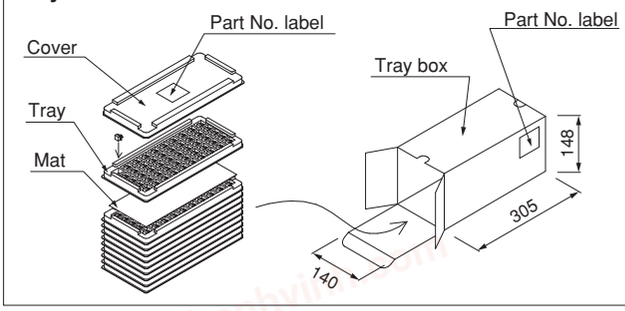

■Flux Cleaning

(1) For the solvent, use water or alcohol. In addition, pay careful attention to use the solvent.

(2) The cleaning method is limited to immersion cleaning only. The cleaning time is 2 minutes, max, but be sure to minimize the time as much as possible.

(3) To clean the switch after soldering, wait until the switch temperature has cooled down to room temperature (30℃ or below).

(4) The product must be dried sufficiently after cleaning. Improper drying may result in fluctuation in torque or electrical damage.