chanhvinh.com

CF-LD

Hyper-Miniature Lever Switches

RoHS Compliant



■Features

1. Light operating feeling.
2. Auto soldering on PC board is possible (non-washable).
3. Three mounting types of PC/Right Angle/ Vertical are available.
4. The gold-plated clip contact mechanism ensures high contact reliability.
5. Lever design, considering the operability. Three lever colors of white, red, and gray are lined up.

■ Internal Structure

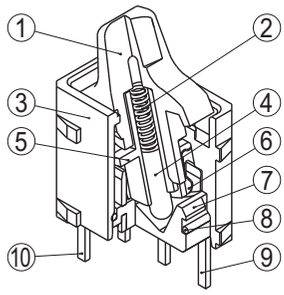

	Part name	Material	Flammability
①	Lever	PA(Polyamide)	UL94V-0
②	C Spring	Piano wire	—
③	Cover	PA(Polyamide)	UL94V-0
④	Actuator tip	Copper alloy, Nickel-plated	—
⑤		PA(Polyamide)	UL94V-0
⑥	Movable contact	Copper alloy, Gold-plated	—
⑦	Base	PA(Polyamide)	UL94V-0
⑧	O Ring	Nitrile rubber	—
⑨	Terminal(Circuit)	Copper alloy, Gold-plated	
⑩	Terminal(Dummy) ※PC only	Copper alloy, Tin-plated	

■ Switching Function

Switching function		
A POS.	B POS.	(5) —(4) —(6)
ON	ON	
(5)—(6)	(5)—(4)	

■ Specifications

Rating	Max.	0.4VA (AC/DC28V 0.1A) (Resistive load)
	Min.	AC/DC20mV 0.1mA (Resistive load)
Dielectric strength		500VAC 1minute
Initial contact resistance		80mΩ Max. (1.5mA 200μVAC)
Initial insulation resistance		500MΩ Min. (500VDC)
Electrical life		10,000 cycles at max. rating
		50,000 cycles at VA0.4 rating & min.
Mechancal life		50,000 cycles
Operating temperature range		−40～+85℃
Storage temperature range		−40～+85℃

■Part Numbering

CF－LD － 1 D C 6 － A G 2 W

- Series name: CF－LD
- No. of pole(s): 1 — 1 pole
- Switching function: D — ON－ON
- Terminal style: C — PC; C4 — PC-R/A; C6 — PC-V/M
- Operating function: A — Lever
- Button color: G — Gray; R — Red; W — White
- Contact material: 2 — Gold plated
- Packaging specifications: W — Tray; blank — Plastic bag

chanhvinh.com

CF-LD

List of Part Numbers

★Made to order products

No.of pole(s)	Switching function	Packaging specifications	Button color	Terminal styles			Pieces in package
				PC	PC-R/A	PC-V/M	
1	D	Tray	Gray	★CF-LD-1DC-AG2W	★CF-LD-1DC4-AG2W	CF-LD-1DC6-AG2W	200pcs./tray
			Red	★CF-LD-1DC-AR2W	★CF-LD-1DC4-AR2W	★CF-LD-1DC6-AR2W	200pcs./tray
			White	★CF-LD-1DC-AW2W	★CF-LD-1DC4-AW2W	★CF-LD-1DC6-AW2W	200pcs./tray
		Plastic bags	Gray	★CF-LD-1DC-AG2	★CF-LD-1DC4-AG2	CF-LD-1DC6-AG2	25pcs./pack
			Red	★CF-LD-1DC-AR2	★CF-LD-1DC4-AR2	★CF-LD-1DC6-AR2	25pcs./pack
			White	★CF-LD-1DC-AW2	★CF-LD-1DC4-AW2	★CF-LD-1DC6-AW2	25pcs./pack

Outline Dimensions

Tolerances unless otherwise specified:±0.3（Unit:mm）

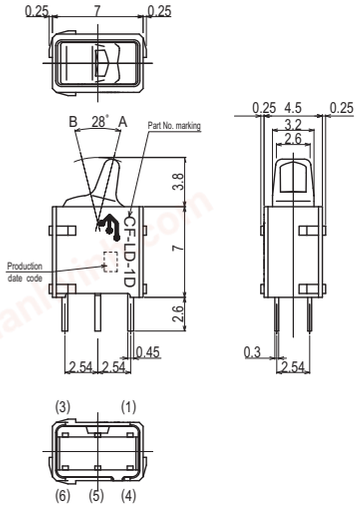

●PC

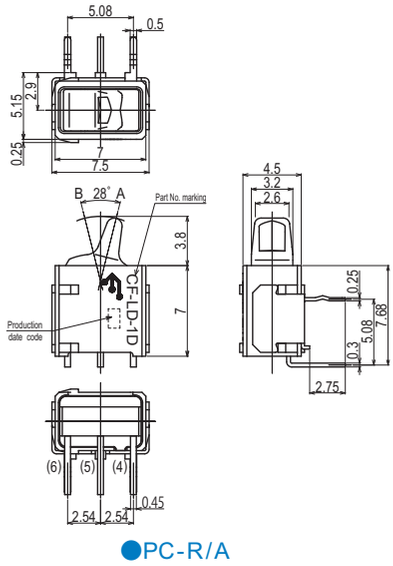

●PC-R/A

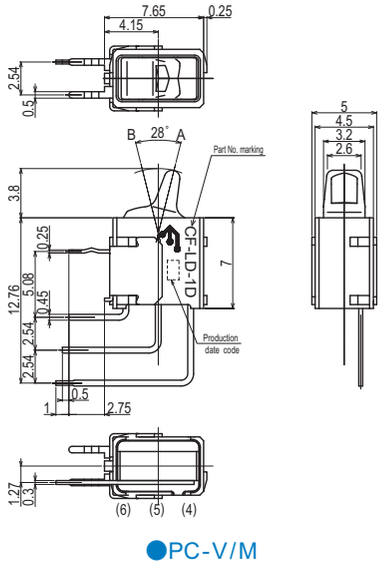

●PC-V/M

PC Hole Layouts

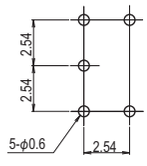

●PC

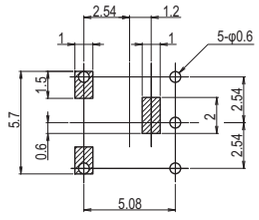

▨:Without pattern area

●PC-R/A

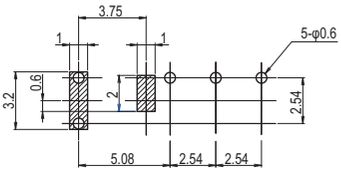

▨:Without pattern area

●PC-V/M

Soldering Specifications

（1）Auto Soldering

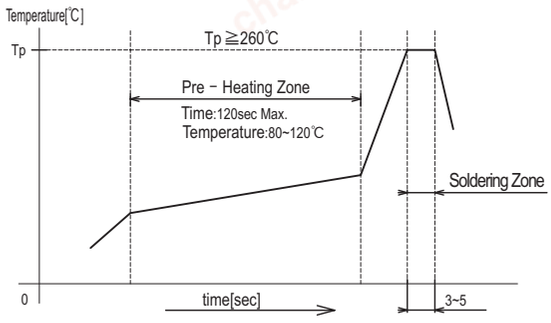

（2）Manual Soldering
Device: Soldering iron
350℃, Max.; 3 seconds, Max.

Packaging Specification

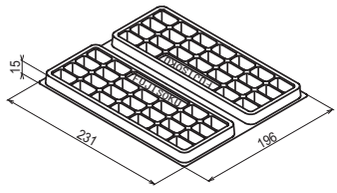

●Tray: 100pcs

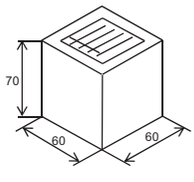

●Plastic bag: 25pcs