chanhvinh.com

CF-LA

High In-Rush Rocker Switches

UL **C-US UL** **ENEC**

Simple Dustproof

RoHS Compliant



Approvals

C-US UL、UL: E43275
ENEC : 1312466

Features

1. High in-rush rocker switch
2. Rush SolderTerminals
3. Five types of terminal (Tab, PC Straight, R/A and L/A)
4. Simple dustproof structure (IP40 rating)
5. C-US UL , UL (TV-8) and ENEC approved products.

Specifications

Rating	Max.	16A125V AC or 16A250V AC (Resistive load)
	Min.	AC／DC5V 10mA
Initial contact resistance		20mΩ max.
Initial Dielectric strength		1500V AC 1minute.
Initial insulation resistance		100MΩ min.
Operating force		1～8N
Electrical life		20,000 cycles
Operating temperature range		−25～+85℃
Storage temperature range		−40～+85℃

Part Numbering

CF-LA — 2 K Z2 — 1 C

Series code | Number of poles | Switching function | Terminal style | Roker design | Packaging spec

Fig.	Number of poles
1	1 pole
2	2 poles

Code	Switching function
A	ON — OFF
K	ON — OFF

Code	Terminal style
C	PC Straight
C4	PC-R/A
C5	PC-L/A
L	Solder Terminals
Z2	TAB:#250

Fig.	Roker design	Fig.	Roker design
1	Unfigured	4	— ◯
2	●	5	— ◯
3	| ◯	6	ON OFF

Code	Packaging spec
Blank	Plastic bags
C	Card board Tray

PC Hole Layouts

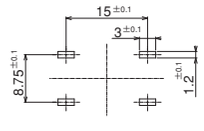

PC

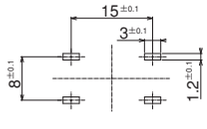

R／A、L／A

Panel Cut-Out Dimensions

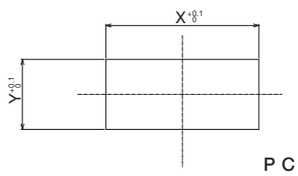

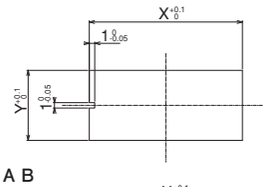

PC、TAB

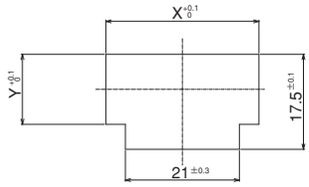

R／A、L／A

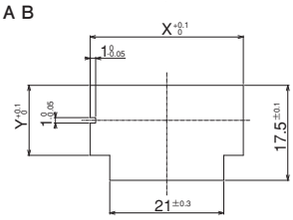

R／A

Panel thickness	X	Y
0.75～1.25	28.2	12.9
1.25以上～2	28.4	12.9
2～3	28.8	12.9

Terminal Styles

Solder Terminals (Style:L)	TAB#250 (Style:Z2)	PC Straight (Style:C)	R/A (Style:C4) L/A (Style:C5)
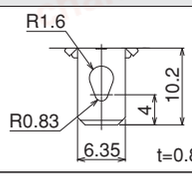	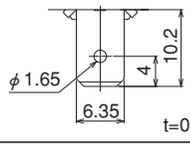	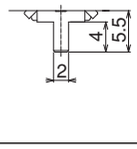	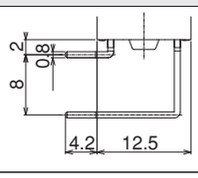

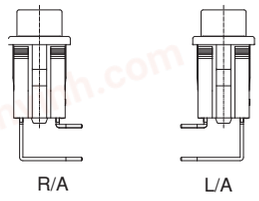

R/A L/A

※For the L/A terminal, only two poles are available.

chanhvinh.com

■Outline dimensions

●Tab:#250 1Pole

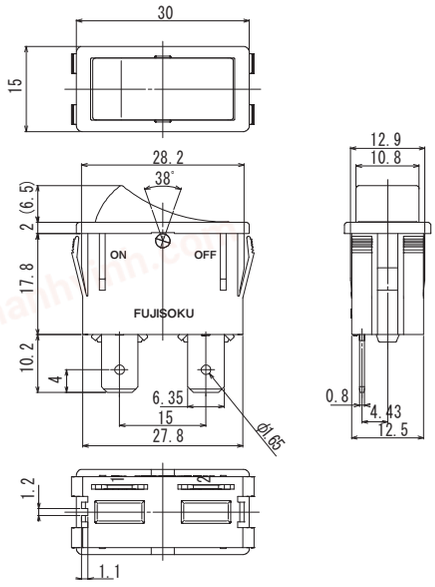

●Tab:#250 2Poles

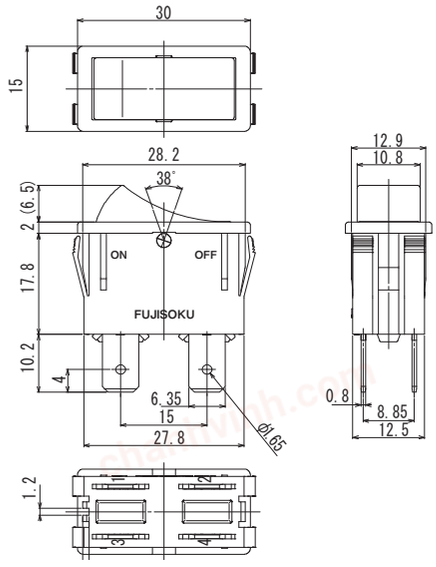

●Solder 1Pole

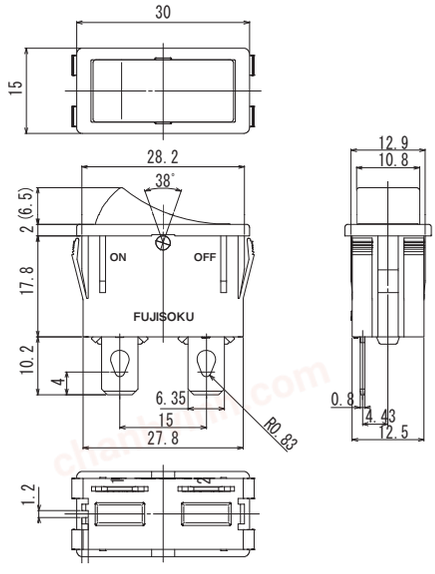

●Solder 2Poles

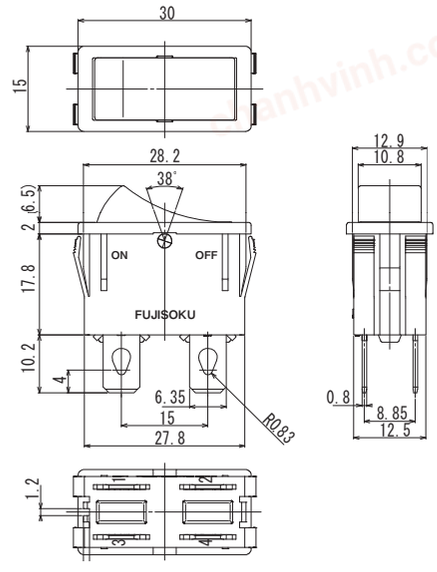

●P/C 1and2Poles

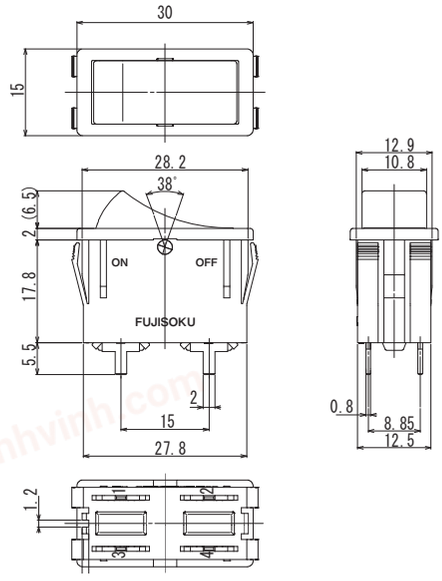

●PC-R/A 2Poles

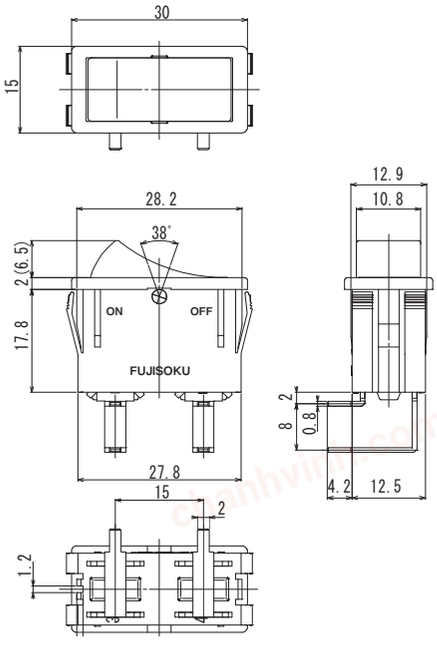

List part numbers

Number of poles	Switching function	Terminal style	Rocker design			Pieces in package	Packaging spec
			No marking	●	| ○		
1 Pole	ON—OFF	PC Straight	CF-LA-1AC-1C	CF-LA-1AC-2C	CF-LA-1AC-3C	100pcs./pack	Card board Tray
		PC-R/A	CF-LA-1AC4-1C	CF-LA-1AC4-2C	CF-LA-1AC4-3C		
		Solder Terminals	CF-LA-1AL-1C	CF-LA-1AL-2C	CF-LA-1AL-3C		
		Tab:#250	CF-LA-1AZ2-1C	CF-LA-1AZ2-2C	CF-LA-1AZ2-3C		
2 Poles	ON—OFF	PC Straight	CF-LA-2KC-1C	CF-LA-2KC-2C	CF-LA-2KC-3C		
		PC-R/A	CF-LA-2KC4-1C	CF-LA-2KC4-2C	CF-LA-2KC4-3C		
		PC-L/A	CF-LA-2KC5-1C	CF-LA-2KC5-2C	CF-LA-2KC5-3C		
		Solder Terminals	CF-LA-2KL-1C	CF-LA-2KL-2C	CF-LA-2KL-3C		
		Tab:#250	CF-LA-2KZ2-1C	CF-LA-2KZ2-2C	CF-LA-2KZ2-3C		
1 Pole	ON—OFF	PC Straight	CF-LA-1AC-1	CF-LA-1AC-2	CF-LA-1AC-3	5pcs./pack	Plastic bags
		PC-R/A	CF-LA-1AC4-1	CF-LA-1AC4-2	CF-LA-1AC4-3		
		Solder Terminals	CF-LA-1AL-1	CF-LA-1AL-2	CF-LA-1AL-3		
		Tab:#250	CF-LA-1AZ2-1	CF-LA-1AZ2-2	CF-LA-1AZ2-3		
2 Poles	ON—OFF	PC Straight	CF-LA-2KC-1	CF-LA-2KC-2	CF-LA-2KC-3		
		PC-R/A	CF-LA-2KC4-1	CF-LA-2KC4-2	CF-LA-2KC4-3		
		PC-L/A	CF-LA-2KC5-1	CF-LA-2KC5-2	CF-LA-2KC5-3		
		Solder Terminals	CF-LA-2KL-1	CF-LA-2KL-2	CF-LA-2KL-3		
		Tab:#250	CF-LA-2KZ2-1	CF-LA-2KZ2-2	CF-LA-2KZ2-3		

Number of poles	Switching function	Terminal style	Rocker design			Pieces in package	Packaging spec
			— ○	— ○	ON OFF		
1 Pole	ON—OFF	PC Straight	CF-LA-1AC-4C	CF-LA-1AC-5C	CF-LA-1AC-6C	100pcs./pack	Card board Tray
		PC-R/A	CF-LA-1AC4-4C	CF-LA-1AC4-5C	CF-LA-1AC4-6C		
		Solder Terminals	CF-LA-1AL-4C	CF-LA-1AL-5C	CF-LA-1AL-6C		
		Tab:#250	CF-LA-1AZ2-4C	CF-LA-1AZ2-5C	CF-LA-1AZ2-6C		
2 Poles	ON—OFF	PC Straight	CF-LA-2KC-4C	CF-LA-2KC-5C	CF-LA-2KC-6C		
		PC-R/A	CF-LA-2KC4-4C	CF-LA-2KC4-5C	CF-LA-2KC4-6C		
		PC-L/A	CF-LA-2KC5-4C	CF-LA-2KC5-5C	CF-LA-2KC5-6C		
		Solder Terminals	CF-LA-2KL-4C	CF-LA-2KL-5C	CF-LA-2KL-6C		
		Tab:#250	CF-LA-2KZ2-4C	CF-LA-2KZ2-5C	CF-LA-2KZ2-6C		
1 Pole	ON—OFF	PC Straight	CF-LA-1AC-4	CF-LA-1AC-5	CF-LA-1AC-6	5pcs./pack	Plastic bags
		PC-R/A	CF-LA-1AC4-4	CF-LA-1AC4-5	CF-LA-1AC4-6		
		Solder Terminals	CF-LA-1AL-4	CF-LA-1AL-5	CF-LA-1AL-6		
		Tab:#250	CF-LA-1AZ2-4	CF-LA-1AZ2-5	CF-LA-1AZ2-6		
2 Poles	ON—OFF	PC Straight	CF-LA-2KC-4	CF-LA-2KC-5	CF-LA-2KC-6		
		PC-R/A	CF-LA-2KC4-4	CF-LA-2KC4-5	CF-LA-2KC4-6		
		PC-L/A	CF-LA-2KC5-4	CF-LA-2KC5-5	CF-LA-2KC5-6		
		Solder Terminals	CF-LA-2KL-4	CF-LA-2KL-5	CF-LA-2KL-6		
		Tab:#250	CF-LA-2KZ2-4	CF-LA-2KZ2-5	CF-LA-2KZ2-6		

Soldering Specifications

(1) Auto Soldering
Device : Jet wave type or dip type
260℃ .; 5-6 seconds, Max.
●Pre-heating should be done at temperatures ranging from 80℃ to 150℃ and within 2 or 3 minutes
The auto soldering is applicable to the PC terminals only.

(2)Manual Soldering
Device : Soldering iron
380℃, Max.; 3 seconds, Max.

Packing Specification

Card board Tray(100pcs. ／ pack)

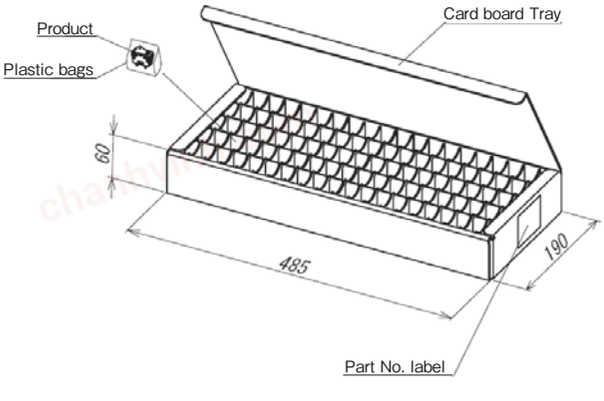

Plastic bags (5pcs. ／ pack)

[Product packaging box]

