chanhvinh.com

CF-CA

Right Angle Tactile Switches

Washable

RoHS Compliant

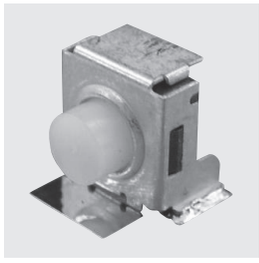

Features

1. Right Angle Tactile Switch
2. Rich in Variation (Actuator Length, With/Without Support Terminal)
3. Silver-Plated / Gold-Plated Contacts
4. Resin Actuator
5. Washable

Specifications

Rating	Max.		1VA max. (32VDC max. 50mA max.)
	Min.	(Silver)	5VDC 1mA
		(Gold)	5VDC 10 μA
Initial contact resistance			100mΩ max.
Dielectric strength			250VAC (50～60Hz) 1 minute
Initial Insulation resistance			100MΩ min. (100VDC)
Stroke			0.25mm
Operating force			3±1.5N {305±153g}
Electrical life			max. Rating 100,000 cycles.
Operating temperature range			−40～+90℃
Storage temperature range			−40～+90℃

Part Numbering

CF-CA — 1 C B4 — P4 1 2 T

Series code: CF-CA

Number of poles

Fig.	Number of poles
1	1 pole

Switching function

Code	Switching function
C	OFF−(ON)

Terminal style

Code	Terminal style
B4	Gull wing R/A

Actuator shape

Code	Actuator shape
P1	1.1mm Resin button
P2	2.4mm Resin button
P4	4.0mm Resin button

Support terminal

Fig.	Support terminal
0	Without
1	With

Contact material

Fig.	Contact material
1	Silver plated
2	Gold plated

Packaging spec

Code	Packaging spec
T	Taping
Blank	Plastic bags

PC Hole Layouts

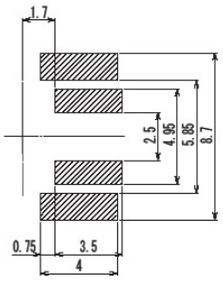

Without support terminal

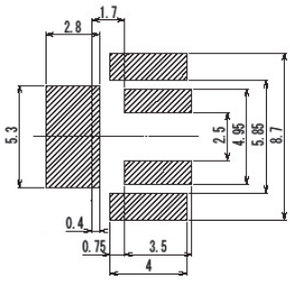

With support terminal

■Outline dimensions

●1.1mm (Without Support Terminal)

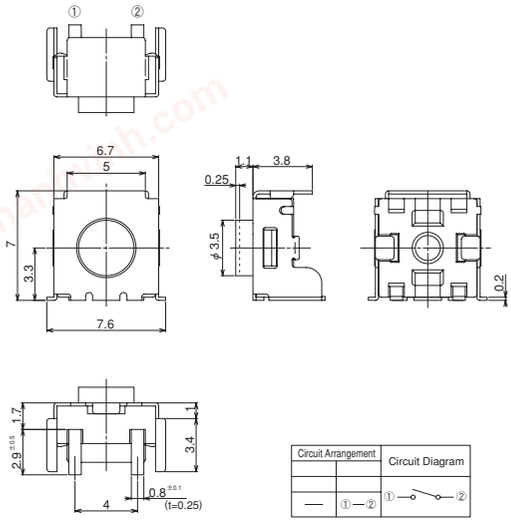

●1.1mm (With Support Terminal)

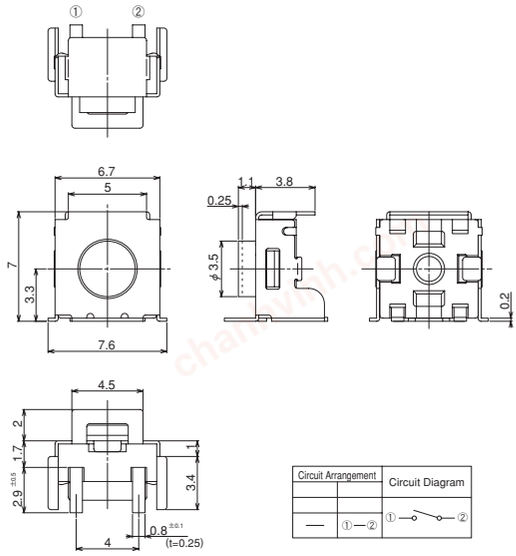

●2.4mm (Without Support Terminal)

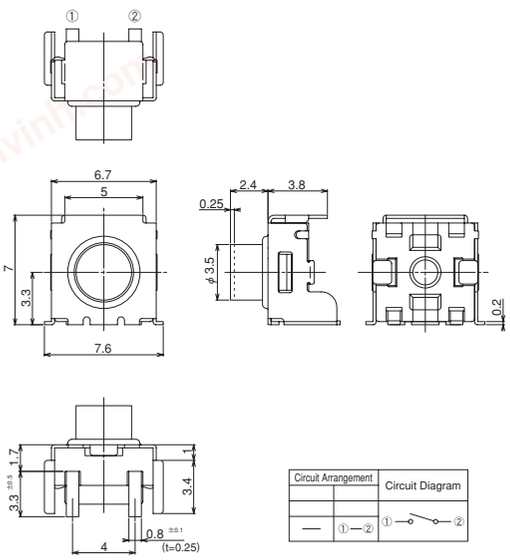

●2.4mm (With Support Terminal)

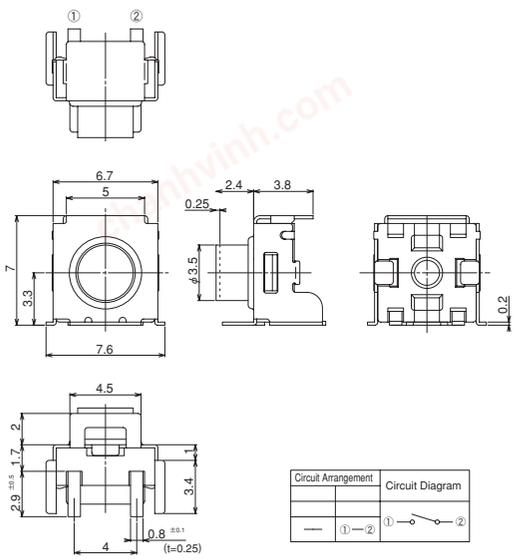

●4.0mm (Without Support Terminal)

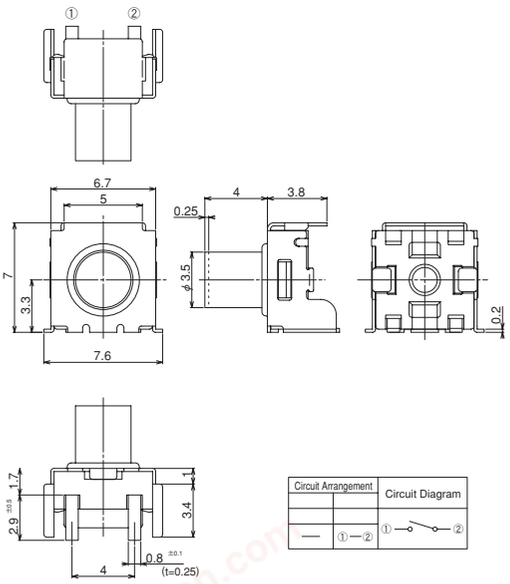

●4.0mm (With Support Terminal)

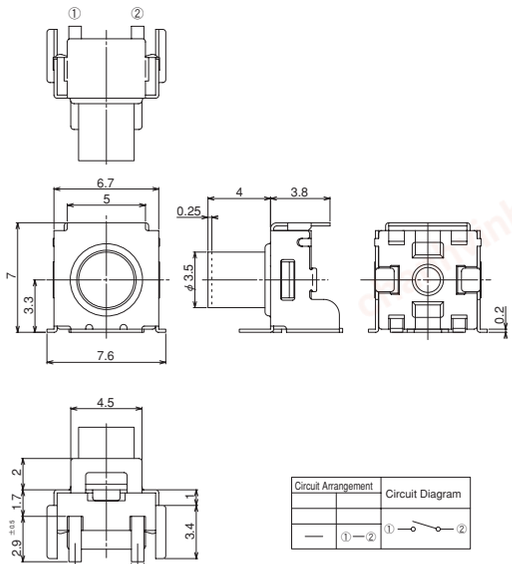

chanhvinh.com

List of part numbers

Number of poles	Switching function	Contact material	Form of Packaging	Actuator shape		Terminal style		Pieces in package
				Material	Hight	R/A Without support terminal	R/A With support terminal	
1 pole	OFF−(ON)	Silver plated	Taping	Resin	1.1mm	**CF-CA-1CB4-P101T**	**CF-CA-1CB4-P111T**	500pcs./reel
					2.4mm	**CF-CA-1CB4-P201T**	**CF-CA-1CB4-P211T**	500pcs./reel
					4.0mm	**CF-CA-1CB4-P401T**	**CF-CA-1CB4-P411T**	500pcs./reel
			Plastic bags		1.1mm	**CF-CA-1CB4-P101**	**CF-CA-1CB4-P111**	20pcs./pack
					2.4mm	**CF-CA-1CB4-P201**	**CF-CA-1CB4-P211**	20pcs./pack
					4.0mm	**CF-CA-1CB4-P401**	**CF-CA-1CB4-P411**	20pcs./pack
		Gold plated	Taping		1.1mm	**CF-CA-1CB4-P102T**	**CF-CA-1CB4-P112T**	500pcs./reel
					2.4mm	**CF-CA-1CB4-P202T**	**CF-CA-1CB4-P212T**	500pcs./reel
					4.0mm	**CF-CA-1CB4-P402T**	**CF-CA-1CB4-P412T**	500pcs./reel
			Plastic bags		1.1mm	**CF-CA-1CB4-P102**	**CF-CA-1CB4-P112**	20pcs./pack
					2.4mm	**CF-CA-1CB4-P202**	**CF-CA-1CB4-P212**	20pcs./pack
					4.0mm	**CF-CA-1CB4-P402**	**CF-CA-1CB4-P412**	20pcs./pack

Soldering Specifications

(1) Reflow Soldering

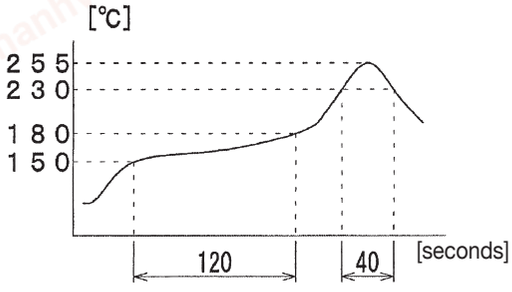

Apply reflow soldering up to 2 times max.

(2) Manual Soldering
Device : Soldering iron
350°C ±10°C, Max.; 3 seconds, Max.

Flux Cleaning

(1) For the solvent, use water or alcohol. In addition, pay careful attention to use the solvent.
(2) The cleaning method is limited to immersion cleaning only. The cleaning time is 2 minutes, max, but be sure to minimize the time as much as possible.
(3) To clean the switch after soldering, wait until the switch temperature has cooled down to room temperature (30℃ or below).
(4) The product must be dried suffi ciently after cleaning. Improper drying may result in fl uctuation in torque or electrical damage.

chanhvinh.com

■Packaging Specification

(1) Taping

Packaging quantity is 500 pcs. per reel. Each reel is packed in a box.
The maximum number of consecutive missing pieces shall be two. The following illustration shows the leader length, empty portion and the product indication method.

Fig.1 Embossed tape dimensions

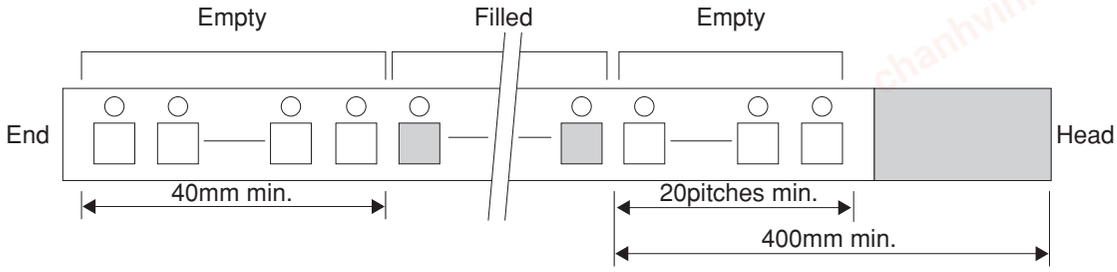

⟨Tape dimensions⟩

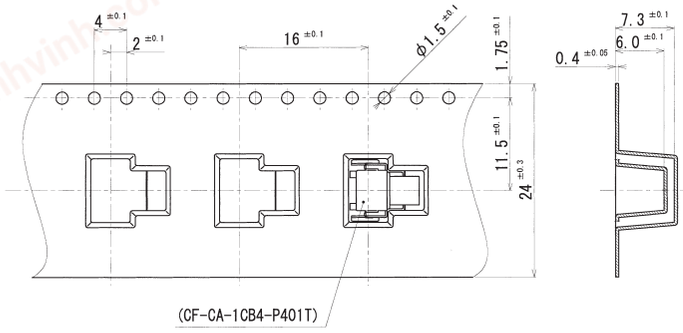

⟨Reel dimensions⟩

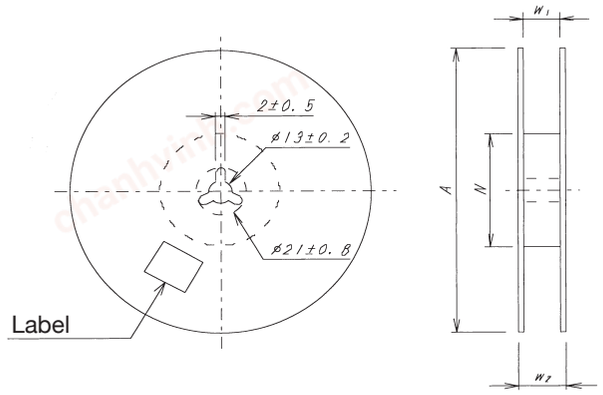

(2) Bulk

Packaging quantity is 20pcs per bag.
Please order in increments of 20pcs.

Unit (mm)

A	W_1	W_1	N
ϕ330±2	25.4±1	29.4±1	ϕ80±1