chanhvinh.com

CFPA

Washable

RoHS Compliant

Surface Mount Pushbutton Switches

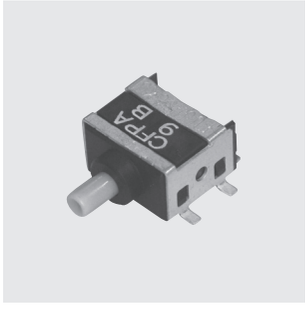

■Features

1. Compatible with Reflow Soldering
2. Washable
3. Gold-Plated Contacts for Low Current Application
4. Clip Contact Mechanism for High Contact Reliability

■ Specifications

Rating	Max.	0.4VA (28VDC max.) (Resistive load)
	Min.	1μA 20mVDC (Resistive load)
Initial contact resistance		80mΩ max. (1.5mA 1kHz 20mV min.)
Dielectric strength		500VAC 1 minute
Initial insulation resistance		500MΩ min. (500VDC)
Stroke		1.1 mm
Operating force		1.5N ± 1N
Electrical life		50,000 operations at max. rating
Switch timing		Non-shorting
Operating temperature range		−40℃ ~ +85℃
Storage temperature range		−40℃ ~ +85℃

■Part Numbering

CFPA — 1 F B4 — A 2 T

Series code & Acutuator

Code	Type
P	Pushbutton

Number of poles

Fig.	Number of poles
1	1 pole

Switching function

Code	Switching function
F	ON — (ON)

Terminal style

Fig.	Terminal style
B4	Gull wing R/A

Actuator shape

Code	Actuator shape
A	Standard

Contact material

Fig.	Contact material
2	Gold plated

Packaging specifications

Code	Packaging specifications
T	Taping
W	Tray

■Optional Accessories

《Sold separately》

Part Name	Dimensions	Color	Part Number
Color Cap	Gloss finish 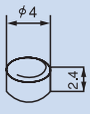 ABS resin	White	140000481453
		Red	140000481452
		Black	140000481451
		Gray	140000481450

The color cap should be installed after the reflow soldering and washing process.

■Color Cap Mounting

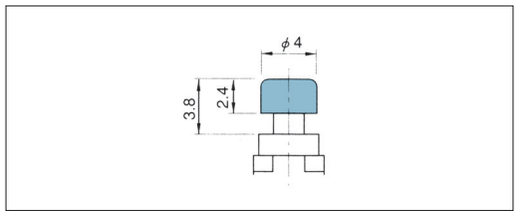

(ON) : Momentary.

chanhvinh.com

CFP2

■ Terminal Pins: Straight
■ Actuator Color: Gray

Ultra-Miniature Pushbutton Switches

Washable

RoHS Compliant

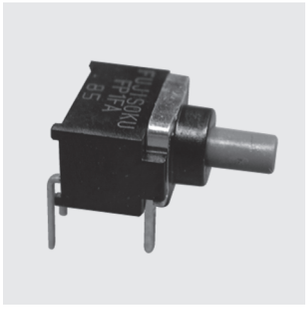

■Features

1. Ultra-miniature pushbutton switch for high density mounting.
2. Washable.
3. Terminal pin pitch: 2.54 mm.
4. Independent detent mechanism ensures light operational feel.
5. Clip contact mechanism for long-term contact reliability.
6. Gold-plated contacts.

■ Specifications

Rating	Max.	0.4VA (28VDC max.)
	Min.	1μA 20mVDC
Initial contact resistance		100m Ω max. (1.5mA 200μVAC)
Dielectric strength		250VAC 1 minute
Insulation resistance		500MΩ min. (250VDC)
Electrical life		10,000 operations at max.rating, 30,000 operations at min.rating,
Mechanical life		30,000 cycles
Operating force		1.47±0.98N
Operating temperature range		−40～+85℃
Storage temperature range		−40～+85℃

■Part Numbering

CFP2 — 2 R C4 — A W

Series Actuator | Number of poles | Switching function | Terminal style | Actuator shape | Packaging spec

Code	Type
P	Pushbutton

Fig.	Number of poles
1	1 pole
2	2 poles

1 pole	2 poles	Switching function
F	R	ON — (ON)

Fig.	Terminal style
C	P/C
C4	Right angle
C6	Vertical mounting

Code	Actuator shape
A	Standard

Code	Packaging spec
W	Tray

Terminal style of C (Style : P C Terminal)

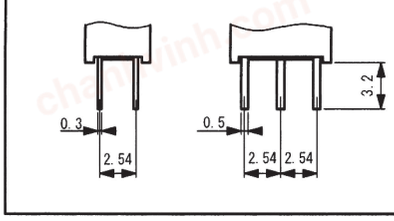

Terminal style of C4 (Style : R/A Terminal)

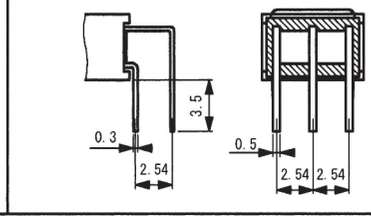

Terminal style of C6 (Style : V/M Terminal)

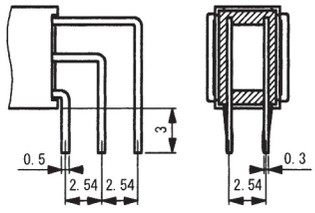

(ON) : Momentary.

chanhvinh.com

CFP2

SPDT

PC



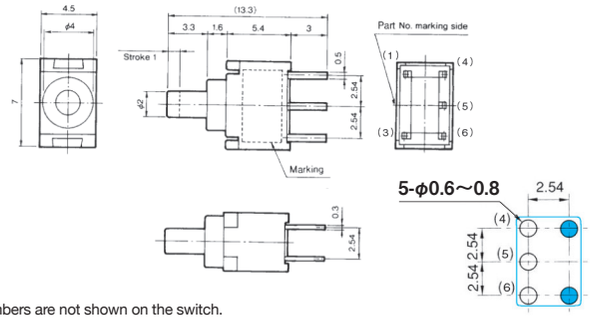

Terminal numbers are not shown on the switch.

Part No. \ Switching function		
CFP2-1FC-AW	ON	(ON)
Connecting terminals	5－6	5－4

(Top view)
PC Hole Layouts

DPDT

PC



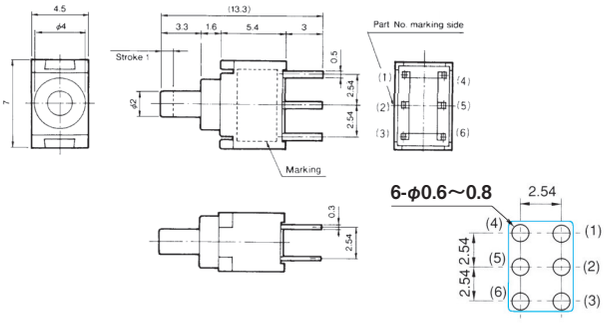

Terminal numbers are not shown on the switch.

Part No. \ Switching function		
☆CFP2-2RC-AW	ON	(ON)
Connecting terminals	2－3 5－6	2－1 5－4

(Top view)
PC Hole Layouts

SPDT

R/A



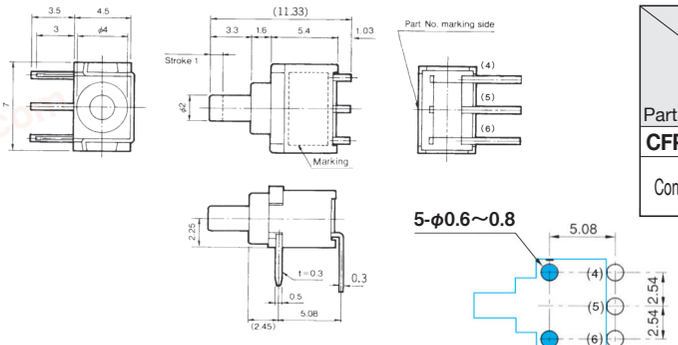

Terminal numbers are not shown on the switch.

Part No. \ Switching function		
CFP2-1FC4-AW	ON	(ON)
Connecting terminals	5－6	5－4

(Top view)
PC Hole Layouts

DPDT

R/A

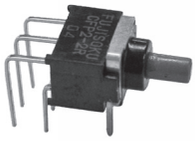

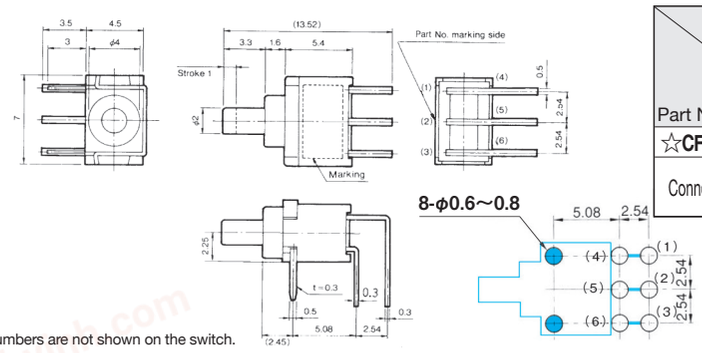

Terminal numbers are not shown on the switch.

Part No. \ Switching function		
☆CFP2-2RC4-AW	ON	(ON)
Connecting terminals	2－3 5－6	2－1 5－4

(Top view)
PC Hole Layouts

※ The above PC Hole Layouts are top view drawings.

■Optional Accessories

《Sold separately》

Part Name	Dimension	Color	Part Number
Color Cap	Gloss finish 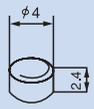 ABS resin	White	**140000481453**
		Red	**140000481452**
		Black	**140000481451**
		Gray	**140000481450**

■Color Cap Mounting

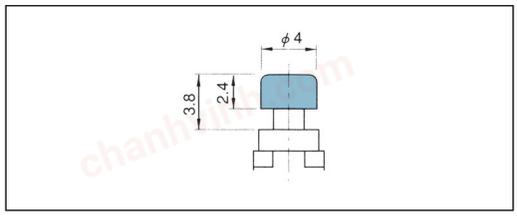

:Optional Accessories.　The blue line shows the outline of the switch.　(ON)：Momentary.　☆：Semi-standard products.

chanhvinh.com

FP

■ Terminal Pins: Kinked
■ Actuator Color: Yellow

Ultra-Miniature Pushbutton Switches

Washable

RoHS Compliant



■Features

1. Ultra-miniature pushbutton switch for high density mounting.
2. Washable.
3. Terminal pin pitch: 2.54 mm.
4. Independent detent mechanism ensures light operational feel.
5. Clip contact mechanism for long-term contact reliability.
6. Gold-plated contacts.

■ Specification

Rating	Max.	0.4VA (28VDC max.)
	Min.	1μA 20mVDC
Initial contact resistance		100mΩmax. (1.5mA 200μVAC)
Dielecteic strength		250V AC 1 minute
Insulation resistance		500MΩ min. (250VDC)
Electrical life		10,000 operations at max.rating, 30,000 operations at min.rating,
Mechanical life		30,000 cycles
Operating force		1.47±0.98N
Operating temperature range		−40～+85℃
Storage temperature range		−40～+85℃

■Part Numbering

F P 2 F — 2 M Z

Series code | Actuator shape | Number of poles | Switching function | Terminal style | Actuator shape

Code	Type
P	Pushbutton

Fig.	Number of poles
1	1 pole
2	2 poles

Code	Switching function
F	ON — (ON)

Fig.	Terminal style
2	P/C
5	Right angle
4	Vertical mounting

Code	Actuator shape
M	Standard

Terminal style of「2」(Style : P C Terminal)

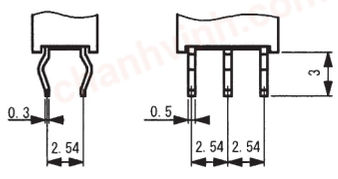

Terminal style of「4」(Style : V/M Terminal)

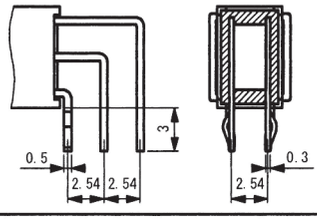

Terminal style of「5」(Style : R/A Terminal)

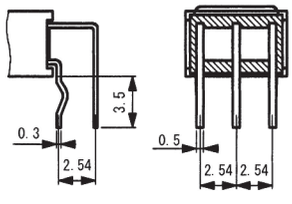

chanhvinh.com

SPDT

PC

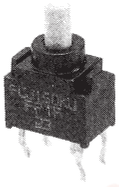

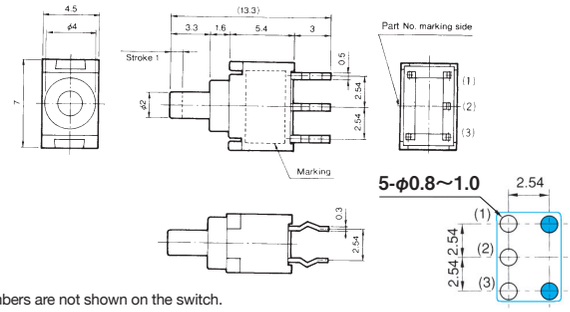

Terminal numbers are not shown on the switch.

Part No. \ Switching function		
FP1F−2M−Z	ON	(ON)
Connecting terminals	2−3	2−1

プリント基板孔あけ寸法図（Top view）
PC Hole Layouts

DPDT

PC



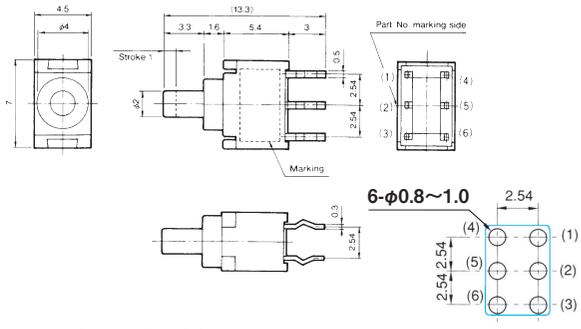

Terminal numbers are not shown on the switch.

Part No. \ Switching function		
★FP2F−2M−Z	ON	(ON)
Connecting terminals	2−3 5−6	2−1 5−4

プリント基板孔あけ寸法図（Top view）
PC Hole Layouts

SPDT

R/A

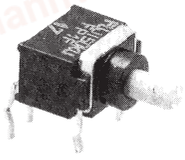

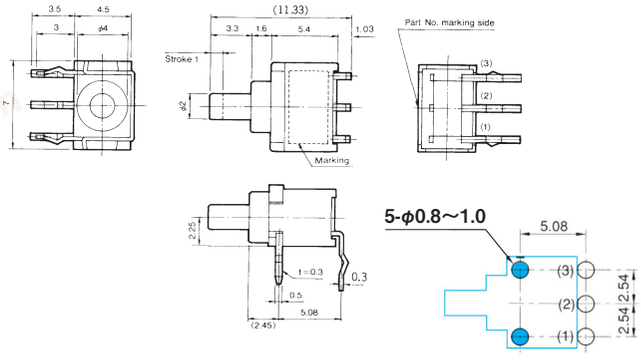

Terminal numbers are not shown on the switch.

Part No. \ Switching function		
FP1F−5M−Z	ON	(ON)
Connecting terminals	2−3	2−1

Top view)
PC Hole Layouts

DPDT

R/A

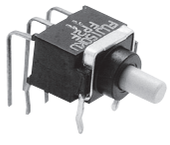

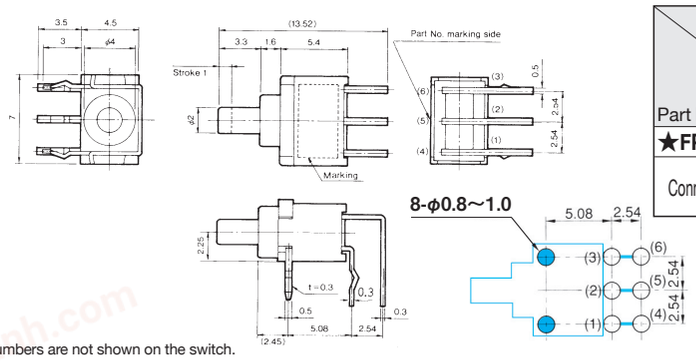

Terminal numbers are not shown on the switch.

Part No. \ Switching function		
★FP2F−5M−Z	ON	(ON)
Connecting terminals	2−3 5−6	2−1 5−4

PC Hole Layouts

■Optional Accessories

《Sold separately》

Part Name	Dimension	Color	Part Number
Color Cap	Gloss finish 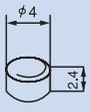 ABS resin	White	**140000481453**
		Red	**140000481452**
		Black	**140000481451**
		Gray	**140000481450**

■Color Cap Mounting

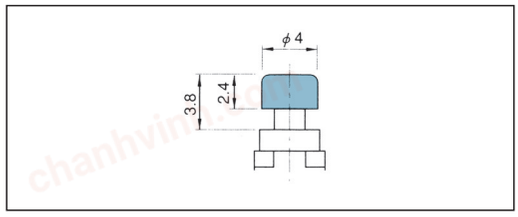

:Optional Accessories.　The blue line shows the outline of the switch.　(ON)：Momentary.　★：Made to order products.

chanhvinh.com

SMAP

Surface Mount Pushbutton Switches

Washable

RoHS Compliant



Features

- Compatible with Reflow Soldering
- Washable
- Gold-Plated Contacts for Low Current Application
- Clip Contact Mechanism for High Contact Reliability

Specifications

Rating	Max.	0.4VA (28VDC max.) (Resistive load)
	Min.	1μA 20mVDC (Resistive load)
Initial contact resistance		100mΩ max. (1.5mA 200 μVAC)
Dielectric strength		250VAC 1minute
Initial insulation resistance		500MΩ min. (250VDC)
Stroke		1.4mm
Operating force		1.47±0.98 N
Electrostatic capacity		5pF max.
Electrical life		10,000 operations at max. rating 30,000 operations at min. rating
Switch timing		Non-shorting
Operating temperature range		−20～+80℃
Storage temperature range		−40～+80℃

Table of Part Numbers

Packaging specifications	Terminal styles	Switching function	Poles	
			1 pole	2 poles
Stick	PC	ON−(ON)	SMAP1F-2M-Z	SMAP2F-2M-Z
	Right-angle	ON−(ON)	SMAP1F-5M-Z	SMAP2F-5M-Z
Emboss taping	Right-angle	ON−(ON)	SMAP1F-5M-E-Z	SMAP2F-5M-E-Z

Optional Accessories

《Sold separately》

Color Cap

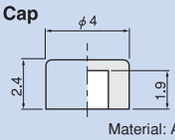

Material: ABS resin

White	140000481453
Red	140000481452
Black	140000481451
Gray	140000481450

Color Cap Mounting

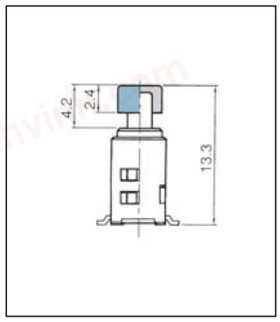

Packaging Specifications

Emboss taping

500 pcs／reel

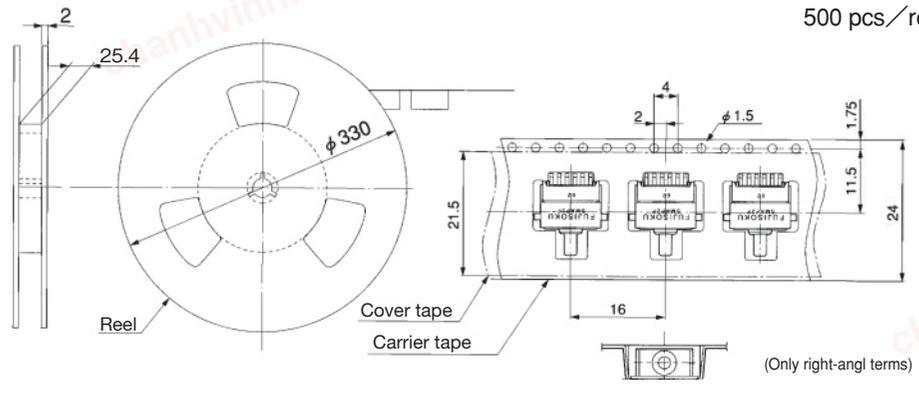

Stick

PC

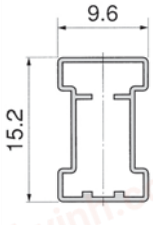

ℓ=570
50pcs／stick

R/A

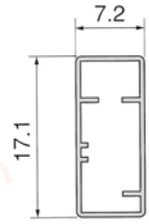

ℓ=570
50pcs／stick

(ON)：Momentary.