chanhvinh.com

HLA • HLC • HLS

Miniature Rocker Switches

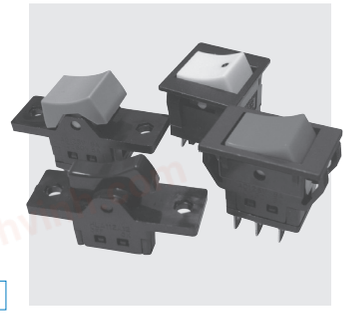

RoHS Compliant

UL CSA

■Features

Economical prices are achieved through out-and-out VA and silver-saving design. Contact stability and high reliability are ensured thanks to the adoption of the seesaw type sliding contact mechanism (patented) (see the figure below) and the switch are usable for a wide range of current capacity from 1 mA to 12 A. In addition, the self-extinguishing phenol resin (**UL94V-0**) is used for the housing material, thereby ensuring excellent insulation and surge resistance. All models (excluding HLS308A) are **UL** and **CSA** approved for high reliability.

● For the detailed specifications, see Common Specifications on page 564.

■Part Numbering

HLA **1** **12** **A** **12**

Series code | Number of poles | Current | Switching function | Terminal style

Series code	Actuator shape
HLA	
HLC	
HLS	

Fig.	Numberof poles
1	1 pole
2	2 poles
3	3 poles

Fig.	Current
08	8A
12	12A

Code		Switching function
1 pole/3 poles	2 poles	
A	K	OFF — ON
D	N	ON — ON

Fig.	Terminal styles
None	TAB:#187(t=0.5)
12	Solder Terminal

Note: For the overseas standards, see page 326.

■Terminal Styles

1 pole		2 poles	
TAB #187 Style : —	Solder Terminal Style : **12**	TAB #187 Style : —	Solder Terminal Style : **12**
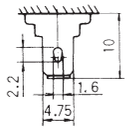	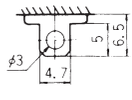	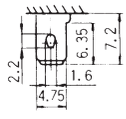	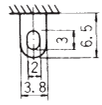
t=0.5	t=1	t=0.5	t=0.5

■Seesaw Type Sliding Mechanism (Patented)

The movable contact moves from (A) to (B) as it wipes the contact surface and, at (B) and (C), the switching feel can be obtained due to the seesaw effect on the common terminal (2). Then, the movable contact moves from (C) to (D) as it wipes the contact surface and, at the point (D), the common terminal (2) and the terminal (3) are turned ON.

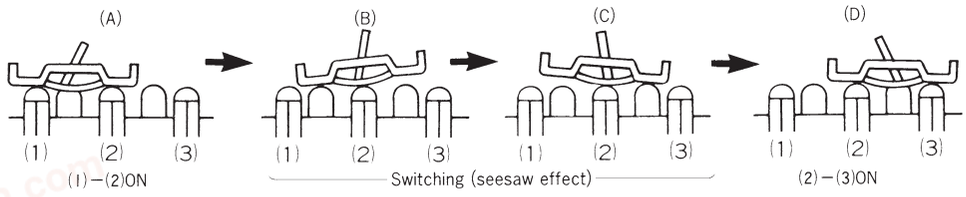

chanhvinh.com

HLA

HLA112 1 pole

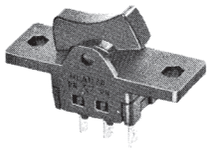

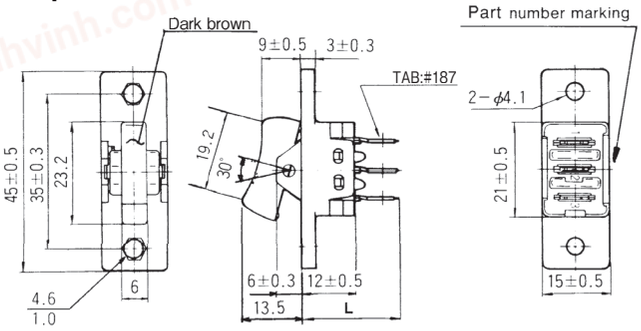

Terminal numbers are shown on the bottom of the switch.

TAB:#187 Terminal

The switching function Type "**A**" is without terminal number (3).

■Dimension L

Part No. \ Terminal style	TAB:#187	Solder Terminal
HLA112A■	22	18.5
HLA112D■	22	18.5

Part No. \ Switching function	Viewed from part No. marking side	
HLA112A■	OFF	ON
Connecting terminals	—	2−1
HLA112D■	ON	ON
Connecting terminals	2−3	2−1
HLA208K■	OFF	ON
Connecting terminals	—	2−1 5−4
HLA208N■	ON	ON
Connecting terminals	2−3 5−6	2−1 5−4

To check the Part No. marked with the ■, refer to the List of Part Numbers shown below.

■Specifications

Rating		Initial contact resistance	Dielectric strength	Insulation resistance	Electrical life
HLA112A **HLA112D**	AC125V 12A Max. AC250V 6A Max. AC·DC6V 1mA Min.	20mΩ Max. (DC2～4V 1A)	AC1500V 1 minute	100MΩ Min. (DC500V)	15,000 cycles

HLA208 2 Poles

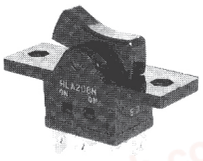

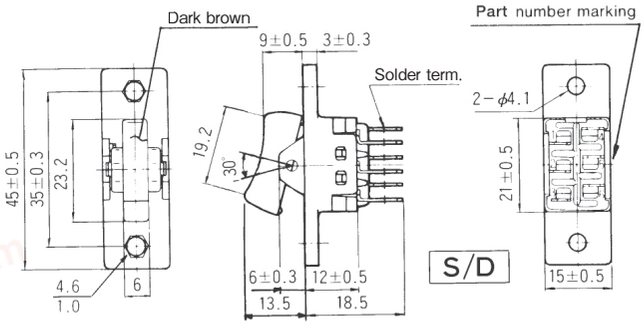

Terminal numbers are shown on the bottom of the switch.

The switching function Type "**K**" is without terminal numbers (3) and (6).

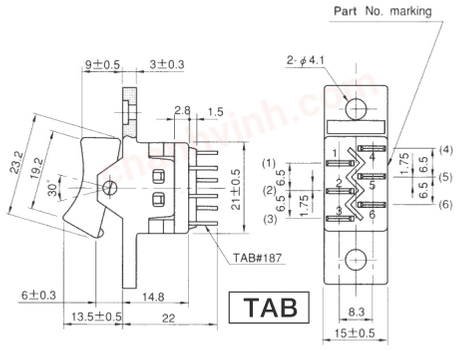

■Specifications

Rating		Initial contact resistance	Dielectric strength	Insulation resistance	Electrical life
HLA208K **HLA208N**	AC125V 8A Max. AC250V 5A Max. AC·DC6V 1mA Min.	20mΩ Max. (DC2～4V 1A)	AC1500V 1 minute	100MΩ Min. (DC500V)	15,000 cycles

■Panel Cut-Out Dimension

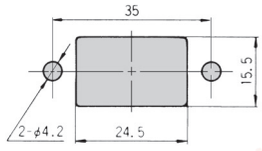

■Table of Part Numbers

Series	Switching function	TAB terminals (#187)		Solder terminals		
		1−pole	2−pole	1−pole	2−pole	3−pole
HLA	OFF − ON	★SP **HLA112A**	★SP **HLA208K**	★SP **HLA112A12**	SP **HLA208K12**	———
	ON − ON	★SP **HLA112D**	★SP **HLA208N**	★SP **HLA112D12**	★SP **HLA208N12**	———
HLC	OFF − ON	SP **HLC112A**	SP **HLC208K**	★SP **HLC112A12**	☆SP **HLC208K12**	———
	ON − ON	★SP **HLC112D**	★SP **HLC208N**	★SP **HLC112D12**	★SP **HLC208N12**	———
HLS	OFF − ON	SP **HLS112A**	SP **HLS208K**	☆SP **HLS112A12**	SP **HLS208K12**	**HLS308A12**
	ON − ON	SP **HLS112D**	SP **HLS208N**	★SP **HLS112D12**	☆SP **HLS208N12**	———

■Placing an order

The button color of the **HLA** type is brown only. Replacement of button is not possible.
Some products in the List of UL- and CSA-approved Products are not registered yet. Before placing the order, check with our Sales Department.

★ : Made to order products. ☆ : Semi-standard products. UL : UL recognized SP : CSA certified

chanhvinh.com

HLC112 1 pole

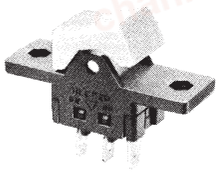

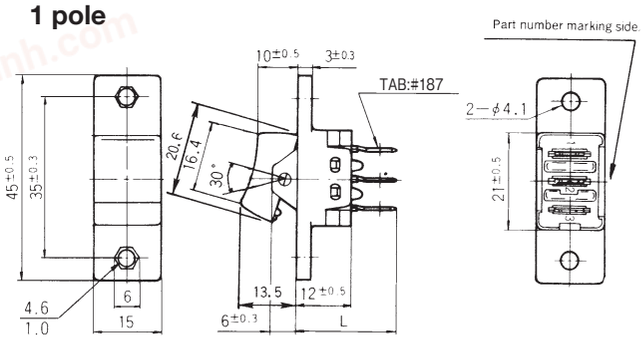

TAB:#187 Terminal

Terminal numbers are shown on the bottom of the switch.

The switching function Type "**A**" is without terminal number(3).

■Specifications

Rating		Initial contact resistance	Dielectric strength	Insulation resistance	Electrical life
HLC112A **HLC112D**	AC125V 12A Max. AC250V 6A Max.	20mΩ Max. (DC2～4V 1A)	AC1500V 1 minute	100MΩ Min. (DC500V)	15,000 cycles
	AC·DC6V 1mA Min.				

HLC208 2 Poles

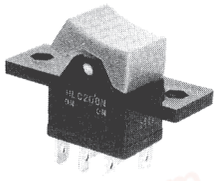

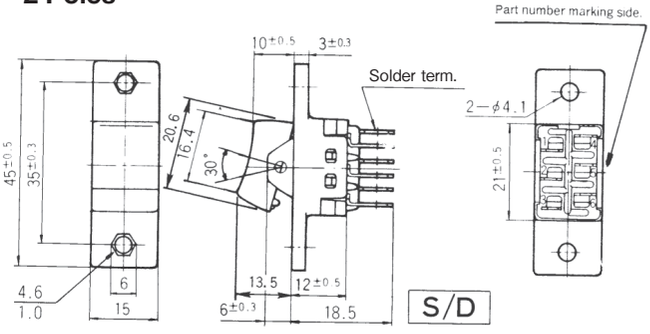

Solder Terminal

Terminal numbers are shown on the bottom of the switch.

The switching function Type "**K**" is without terminal numbers (3) and (6).

■Specifications

Rating		Initial contact resistance	Dielectric strength	Insulation resistance	Electrical life
HLC208K **HLC208N**	AC125V 8A Max. AC250V 5A Max.	20mΩ Max. (DC2～4V 1A)	AC1500V 1 minute	100MΩ Min. (DC500V)	15,000 cycles
	AC·DC6V 1mA Min.				

■Dimension L

Part No. \ Terminal style	TAB:#187	Solder Terminal
HLC112A■	22	18.5
HLC112D■	22	18.5

Part No. \ Switching function	Viewed from part No. marking side	
		
HLC112A■	OFF	ON
Connecting terminals	—	2−1
HLC112D■	ON	ON
Connecting terminals	2−3	2−1
HLC208K■	OFF	ON
Connecting terminals	—	2−1 5−4
HLC208N■	ON	ON
Connecting terminals	2−3 5−6	2−1 5−4

To check the Part No. marked with the ■, refer to List of Part Numbers on Page 325.

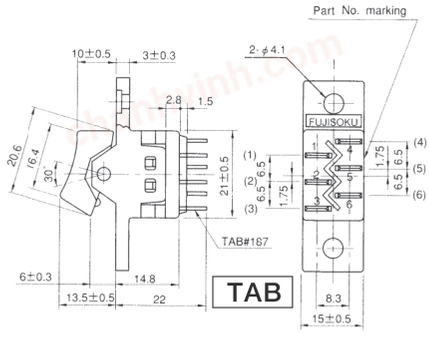

■Panel Cut-Out Dimensions

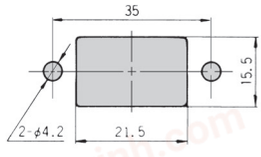

■Mounting the HLC Type Button

The button can be replaced by pressing the button in the direction of the arrow.

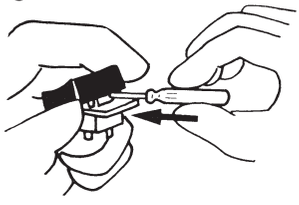

■Placing an order

The button of the **HLC** type comes as an accessory. Choose one from the table on page 328 and specify the color in part number when placing an order.

chanhvinh.com

HLS

HLS112 1 pole

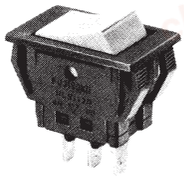

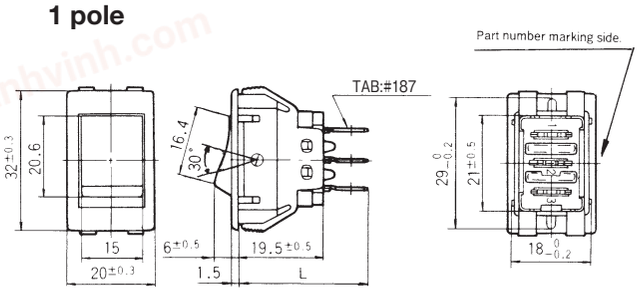

TAB:#187 Terminal

Terminal numbers are shown on the bottom of the switch.

The switching function Type "**A**" is without terminal number (3).

■Specifications

Rating		Initial contact resistance	Dielectric strength	Insulation resistance	Electrical life
HLS112A **HLS112D**	AC125V 12A Max. AC250V 6A Max.	20mΩ Max. (DC2～4V 1A)	AC1500V 1 minute	100MΩ Min. (DC500V)	15,000 cycles
	AC·DC6V 1mA Min.				

■Dimension L

Part No. \ Terminal style	TAB:#187	Solder Terminal
HLS112A■	29.5	26
HLS112D■	29.5	26

Part No. \ Switching function	Viewed from part No. marking side	
		
HLS112A■	OFF	ON
Connecting terminals	—	2—1
HLS112D■	ON	ON
Connecting terminals	2—3	2—1
HLS208K■	OFF	ON
Connecting terminals	—	2—1 5—4
HLS208N■	ON	ON
Connecting terminals	2—3 5—6	2—1 5—4

To check the Part No. marked with the ■, refer to List of Part Numbers on Page 325.

HLS208 2 poles

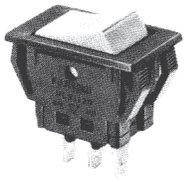

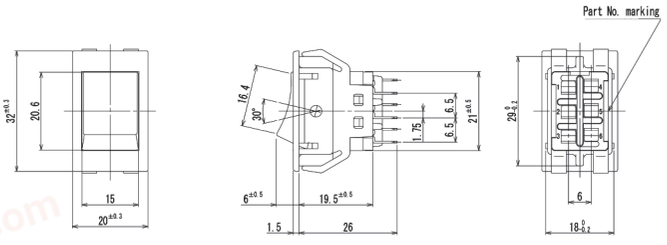

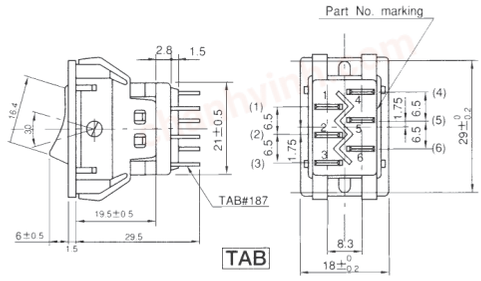

Solder Terminal

Terminal numbers are shown on the bottom of the switch.

The switching function Type "**K**" is without terminal numbers (3) and (6).

■Specifications

Rating		Initial contact resistance	Dielectric strength	Insulation resistance	Electrical life
HLS208K **HLS208N**	AC125V 8A Max. AC250V 5A Max.	20mΩ Max. (DC2～4V 1A)	AC1500V 1 minute	100MΩ Min. (DC500V)	15,000 cycles
	AC·DC6V 1mA Min.				

■Panel Cut-Out Dimension

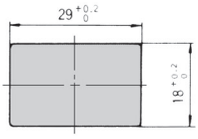

Panel thickness
: 1～3mm

■Mounting the HLC Type Button

To mount the button, insert the lower-rocker side first, and press in the other side while pressing the button with the ball of a finger. The button is not replaceable once it is mounted.

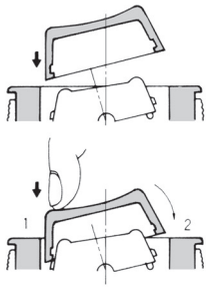

■Placing an order

The button of the **HLS** type comes as an accessory. Choose one from the table on page 329 and specify the color by part number when placing an order.

chanhvinh.com

HLS308 3—poles

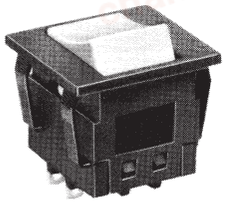

Solder terminals

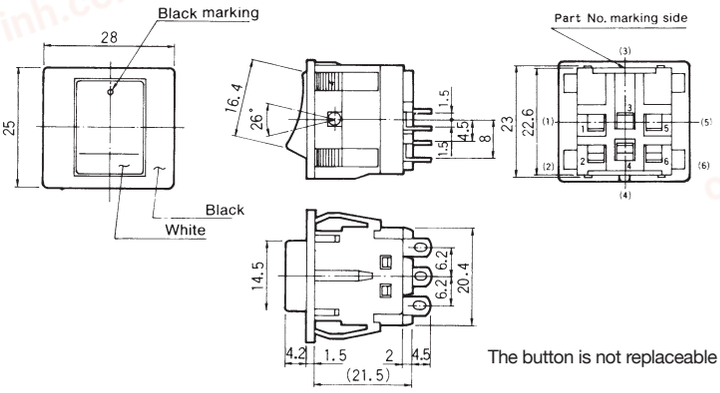

Terminal numbers are shown on the bottom of the switch.

The button is not replaceable (Color: White).

Part No.	Marking ↓	↓
HLS308A12	ON	OFF
Connecting terminals	1—2 3—4 5—6	—

■Specifications

Rating		Initial contact resistance	Dielectric strength	Insulation resistance	Electrical life	Operating temperature range
Maximum rating	AC125V 8A AC250V 5A	100mΩ Max. (DC2～4V 1A)	AC2000V 1 minute	100MΩ Min. (DC500V)	5,000 cycles	−15～+85℃
Minimum rating	AC･DC6V 1mA					

■Panel Cut-Out Dimensions

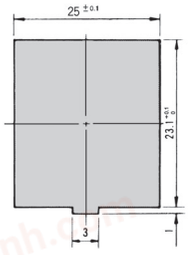

Panel thickness : 1～2mm

■Soldering Specifications

Device : Soldering iron
420℃, Max.; 3 seconds, Max.

■Accessories (For HLC･HLS : Without HLS308)

《Supplied separately》

Accessories	Standard accessories	Optional accessories					
Part name	Button	Button					
Dimensions	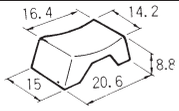	Matte finish Dot marking 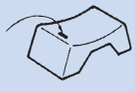 with ϕ2.5 concave					
Button color	Part number	Button color	Dot marking	Part number	Button color	Dot marking	Part number
White	**140000480738**	White	——	**140000480739**	White	Red	**140000480874**
Red	**140000480628**	Red	——	**140000480686**	White	Black	**140000481081**
Black	**140000480621**	Black	——	**140000480685**	Red	White	**140000480711**
Gray	**140000480629**	Gray	——	**140000480687**	Red	Black	**140000480896**
Green	**140000480631**	Green	——	**140000480689**	Black	White	**140000480710**
Blue	**140000480632**	Blue	——	**140000480688**	Black	Red	**140000480650**
Yellow	**140000480630**	Yellow	——	**140000480690**	Gray	White	**140000480741**
Brown	**140000480633**	Yellow	White	**140000481511**	Gray	Red	**140000480800**
——	——	Brown	——	**140000480691**	Gray	Black	**140000480865**

:Optional Accessories.