chanhvinh.com

AP

Subminiature Pushbutton Switches

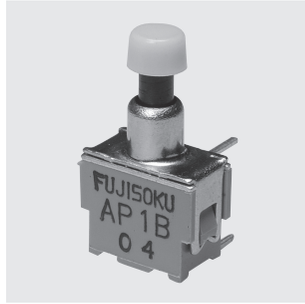

RoHS Compliant

■Features

1. Gold-plated contacts.
2. Terminal pin pitch: 2.54 mm.

■Specifications

Rating	Max:50mA 48VAC/DC Min:1μA 20mVAC/DC
Initial contact resistance	50mΩ max. (1.5mA 200μVAC)
Dielectric strength	500VAC 1 minute
Insulation resistance	10,000MΩ min. (250VDC)
Electrical life	10,000 operations at maximum rating. 50,000 operations at 0.4VA.
Operating temperature range	−20～+85℃
Storage temperature range	−40～+85℃

■Part Numbering

A P 2 L — 2 M — Z

Series code | Actuator shape | Number of poles | Switching function | Terminal style | Actuator shape

Code	Type
P	Non-washable type

Fig.	Number of poles
1	1 pole
2	2 poles

Code 1pole	Code 2poles	Switching function
B	L	ON — (OFF)
C	M	OFF — (ON)
F	R	ON — (ON)

Fig.	Terminal style
2	P/C terminal
6	Right angle (0.3 inch pitch)

Code	Actuator shape
M	Standard
S	Short
H	Square

■Actuator Shape

Standard (**M**)	Short (**S**)	Square (**H**)
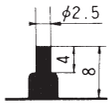		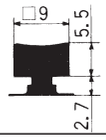

■PC Hole Layouts

·····Page 245.

■Right angle Terminals

0.3 R/A (0.3—inch pich)

1 pole

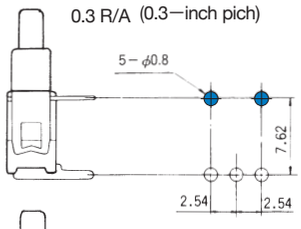

2 poles

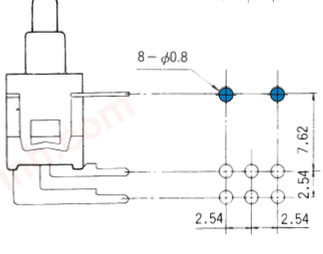

chanhvinh.com

SPST/SPDT





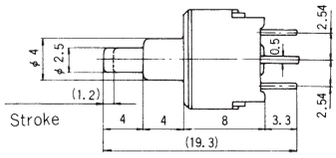

※ Terminal pin No.2 is not available in switches with Switching Function "**B**" and "**C**".

PC

Part No. \ Switching function		Push
★※AP1B−2M−Z	ON	(OFF)
Connecting terminals	1−3	—
※AP1C−2M−Z	OFF	(ON)
Connecting terminals	—	1−3
☆ AP1F−2M−Z	ON	(ON)
Connecting terminals	2−3	2−1

DPST/DPDT

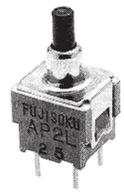

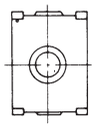

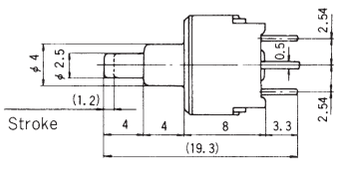

※ Terminal pins No.2 and 5 are not available in switches with Switching Function "**L**" and "**M**".

PC

Part No. \ Switching function		Push
★※AP2L−2M−Z	ON	(OFF)
Connecting terminals	1−3 4−6	—
★※AP2M−2M−Z	OFF	(ON)
Connecting terminals	—	1−3 4−6
★ AP2R−2M−Z	ON	(ON)
Connecting terminals	2−3 5−6	2−1 5−4

SPST/SPDT

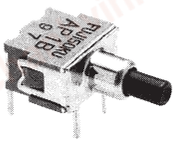

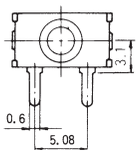

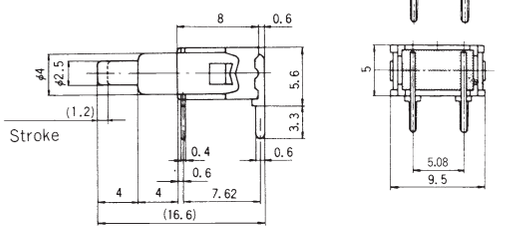

※ Terminal pin No.2 is not available in switches with Switching Function "**B**" and "**C**".

0.3R/A

Part No. \ Switching function		Push
★※AP1B−6M−Z	ON	(OFF)
Connecting terminals	1−3	—
※AP1C−6M−Z	OFF	(ON)
Connecting terminals	—	1−3
★※AP1F−6M−Z	ON	(ON)
Connecting terminals	2−3	2−1

DPST/DPDT

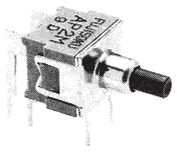

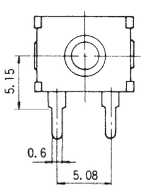

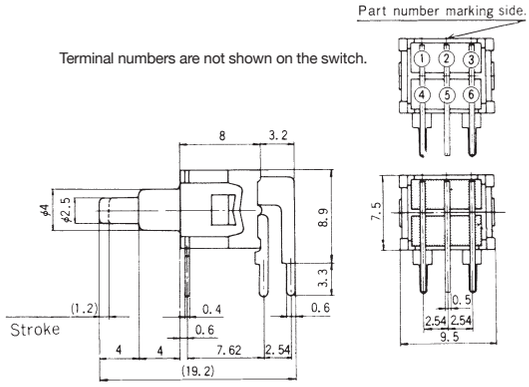

※Terminal pins No.2 and 5 are not available in switches with Switching Function "**L**" and "**M**".

0.3R/A

Part No. \ Switching function		Push
★※AP2L−6M−Z	ON	(OFF)
Connecting terminals	1−3 4−6	—
☆※AP2M−6M−Z	OFF	(ON)
Connecting terminals	—	1−3 4−6
★ AP2R−6M−Z	ON	(ON)
Connecting terminals	2−3 5−6	2−1 5−4

(ON)．(OFF)：Momentary.　　☆：Semi-standard products.　★：Made to order products.

chanhvinh.com

AP—S (Short type)

SPST/SPDT

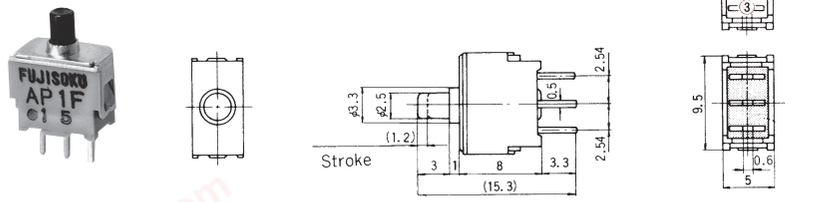

※ Terminal pin No.2 is not available in switches with Switching Function "**B**" and "**C**".

PC

Part No. \ Switching function		Push
★※**AP1B—2S—Z**	ON	(OFF)
Connecting terminals	1—3	—
※**AP1C—2S—Z**	OFF	(ON)
Connecting terminals	—	1—3
AP1F—2S—Z	ON	(ON)
Connecting terminals	2—3	2—1

DPST/DPDT

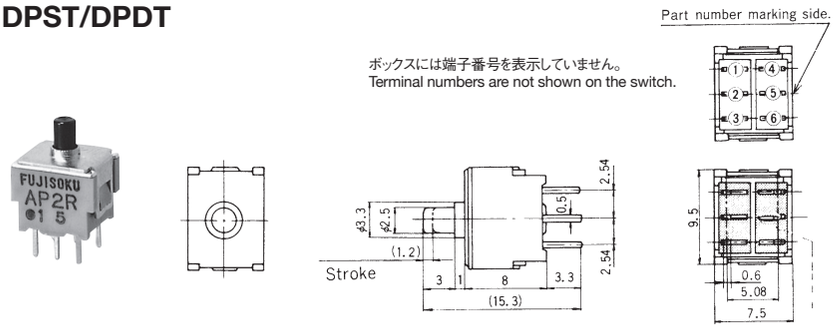

※ Terminal pins No.2 and 5 are not available in switches with Switching Function "**L**" and "**M**".

PC

Part No. \ Switching function		Push
★※**AP2L—2S—Z**	ON	(OFF)
Connecting terminals	1—3 4—6	—
★※**AP2M—2S—Z**	OFF	(ON)
Connecting terminals	—	1—3 4—6
★ **AP2R—2S—Z**	ON	(ON)
Connecting terminals	2—3 5—6	2—1 5—4

SPST/SPDT

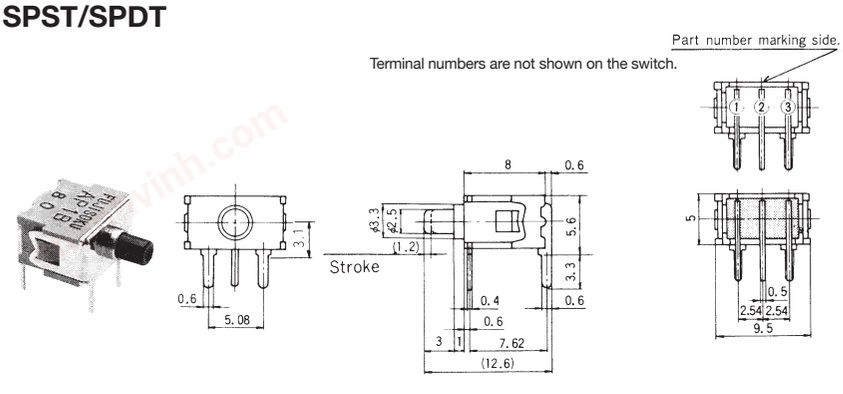

※ Terminal pin No.2 is not available in switches with Switching Function "**B**" and "**C**".

0.3R/A

Part No. \ Switching function		Push
★※**AP1B—6S—Z**	ON	(OFF)
Connecting terminals	1—3	—
※**AP1C—6S—Z**	OFF	(ON)
Connecting terminals	—	1—3
AP1F—6S—Z	ON	(ON)
Connecting terminals	2—3	2—1

DPST/DPDT

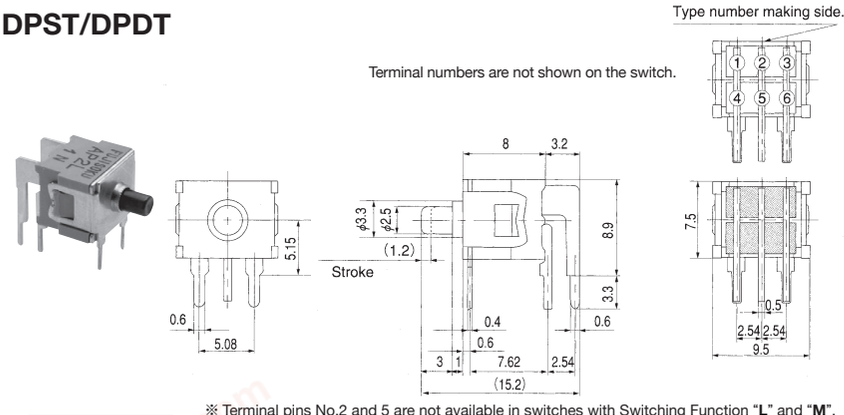

※ Terminal pins No.2 and 5 are not available in switches with Switching Function "**L**" and "**M**".

0.3R/A

Part No. \ Switching function		Push
★※**AP2L—6S—Z**	ON	(OFF)
Connecting terminals	1—3 4—6	—
★※**AP2M—6S—Z**	OFF	(ON)
Connecting terminals	—	1—3 4—6
☆ **AP2R—6S—Z**	ON	(ON)
Connecting terminals	2—3 5—6	2—1 5—4

★ : Made to order products. ☆ : Semi-standard products. (ON). (OFF) : Momentary.

chanhvinh.com

SPST/SPDT



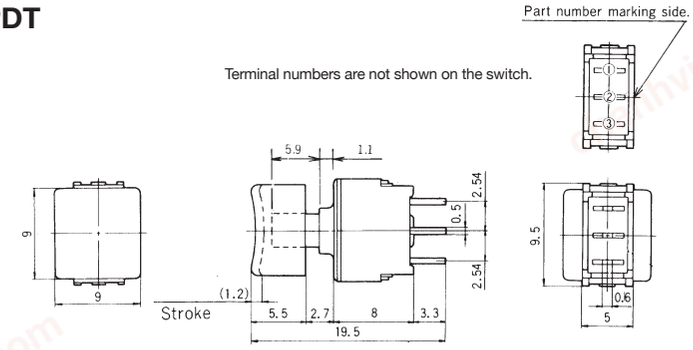

PC

※ Terminal pin No.2 is not available in switches with Switching Function "**B**" and "**C**".

Part No. \ Switching function		Push 
★※**AP1B−2H−Z**	ON	(OFF)
Connecting terminals	1−3	−
※**AP1C−2H−Z**	OFF	(ON)
Connecting terminals	−	1−3
AP1F−2H−Z	ON	(ON)
Connecting terminals	2−3	2−1

DPST/DPDT

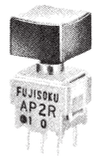

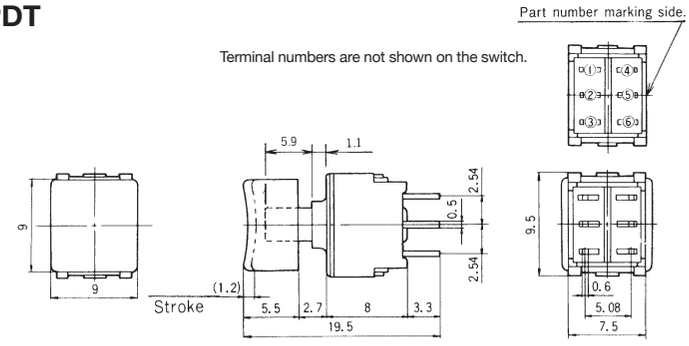

PC

※Terminal pins No.2 and 5 are not available in switches with Switching Function "**L**" and "**M**".

Part No. \ Switching function		Push 
▲※**AP2L−2H−Z**	ON	(OFF)
Connecting terminals	1−3 4−6	−
★※**AP2M−2H−Z**	OFF	(ON)
Connecting terminals	−	1−3 4−6
★ **AP2R−2H−Z**	ON	(ON)
Connecting terminals	2−3 5−6	2−1 5−4

■Standard Accessories

《Sold separately》

Color Button for **AP−H** series		
Dimensions	Color	Part No.
	White	**140000470198**
	Red	**140000470200**
	Black	**140000470199**
	Gray	**140000470204**
	Green	**140000470202**
	Blue	**140000470203**
	Orange	**140000470205**
	Yellow	**140000470201**
ABS resin	Brown	**140000470206**

A Color Button is supplied with the switch. Please select from the above 9 part numbers.

■Optional Accessories(10pcs./pack)

(AP･APE)

《Sold separately》

Color Cap for **AP−M**、**APE−M** & **AP−S** series		
Dimensions	Color	Part No.
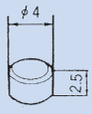	White	**140000481402**
	Red	**140000481404**
	Black	**140000481403**
	Gray	**140000481408**
	Green	**140000481406**
	Blue	**140000481407**
	Orange	**140000481414**
	Yellow	**140000481405**
PC resin	Brown	**140000481409**

■Optional Accessories(AP・APE用)

《Sold separately》

部品名/Part name	**Bracket**				
Poles	Single pole		Double poles		
Box size	5 mm	5 mm	7.5 mm	7.5 mm	5 mm
Type	**AP-M･APE-M･AP-H**	**AP-S**	**AP-M･AP-H･APE-M**	**AP-S**	**APE-M**
Dimensions	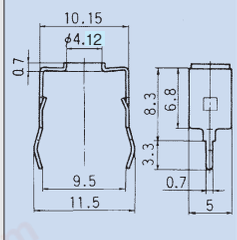	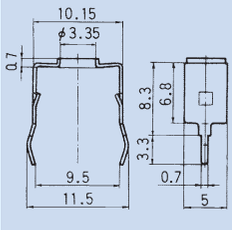	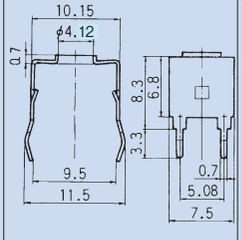	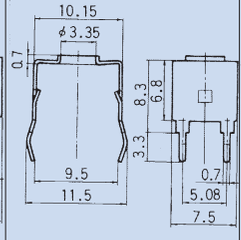	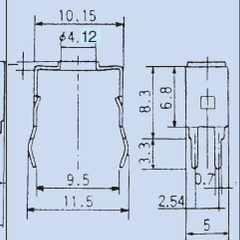
Part No.	**140000640314**	**140000640316**	**140000640315**	**140000640317**	**140000640318**

(ON)．(OFF)：Momentary.　　:Optional Accessories.　　★：Made to order products.

chanhvinh.com

AP

■ Soldering Specifications

(1)Manual Soldering
Device : Soldering iron
①380°C, Max.; 3 seconds, Max.
(2)Auto Soldering (PC types only)
Device : Jet wave type or dip type
①275°C, 6 seconds, Max.
・Pre-heating should be done at temperatures from 80 to 120° C and within 120 seconds.
(3)When soldering two or more terminals to the common land, use solder resist to solder them independently.

■ Flux Cleaning

(1) Solvent :Fluorine or Alcohol type
(2) The **AP** series are not washable. To wash the PC board, clean the soldering surface of the PC board with a brush so that the switch is not exposed to the cleaning solution.

■ Packaging Specifications

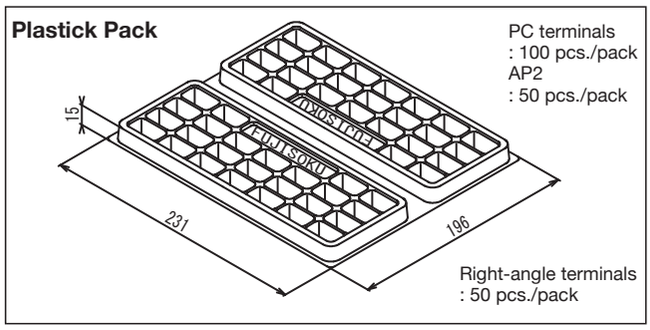

■ Color Cap Mounting

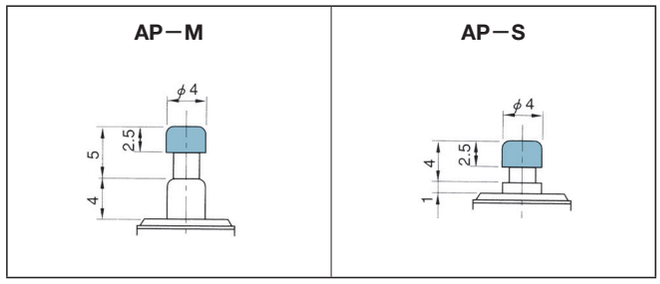

Refer to P.253.

■ Table of Part Numbers

Term.style	Poles	Switching function	APE−M	AP−M	AP−S	AP−H
PC	1 pole	ON −(OFF)	——	★AP1B−2M−Z	★AP1B−2S−Z	★AP1B−2H−Z
		OFF − (ON)	——	AP1C−2M−Z	AP1C−2S−Z	AP1C−2H−Z
		ON − (ON)	APE1F−2M−10−Z	☆AP1F−2M−Z	AP1F−2S−Z	AP1F−2H−Z
	2 poles	ON −(OFF)	——	★AP2L−2M−Z	▲AP2L−2S−Z	▲AP2L−2H−Z
		OFF − (ON)	——	★AP2M−2M−Z	★AP2M−2S−Z	★AP2M−2H−Z
		ON − (ON)	APE2F−2M−10−Z	★AP2R−2M−Z	★AP2R−2S−Z	★AP2R−2H−Z
0.3R/A	1 pole	ON −(OFF)	——	★AP1B−6M−Z	★AP1B−6S−Z	——
		OFF − (ON)	——	AP1C−6M−Z	AP1C−6S−Z	——
		ON − (ON)	APE1F−6M−10−Z	★AP1F−6M−Z	AP1F−6S−Z	——
	2 poles	ON −(OFF)	——	★AP2L−6M−Z	★AP2L−6S−Z	——
		OFF − (ON)	——	☆AP2M−6M−Z	★AP2M−6S−Z	——
		ON − (ON)	☆APE2F−6M−10−Z	★AP2R−6M−Z	☆AP2R−6S−Z	——
0.2R/A	1 pole	ON − (ON)	APE1F−5M−10−Z	——	——	——
			APE1F−5M−10−2−Z	——	——	——
	2 poles	ON − (ON)	★APE2F−5M−10−Z	——	——	——
			——	——	——	——

★ : Made to order products. ☆ : Semi-standard products. ▲ : Inquiry products. (ON). (OFF) : Momentary.