chanhvinh.com

Product Search Data Sheet

Note: This datasheet may be out of date.
Please download the latest datasheet of DSS1NB32A471Q91# from the official website of Murata Manufacturing Co., Ltd.

http://www.murata.com/en-gb/products/productdetail?partno=DSS1NB32A471Q91%23

DSS1NB32A471Q91#

"#" indicates a package specification code.

In Production RoHS REACH

< List of part numbers with package codes >
DSS1NB32A471Q91A

Appearance & Shape



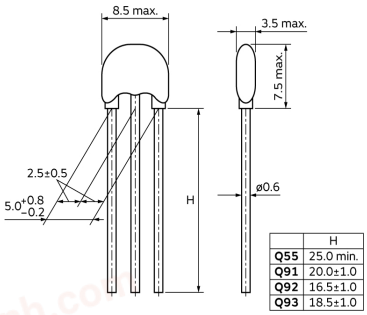

	H
Q55	25.0 min.
Q91	20.0±1.0
Q92	16.5±1.0
Q93	18.5±1.0

(in mm)

Features

DSS1 series is a compact, high performance lead type 3 terminal capacitor which can be mounted in 2.54mm pitch.
Its three terminal structure enables nice high frequency performance.
Wide capacitance variation enables flexible selection for various noise frequencies.
High speed mounting is available with automatic insertion machine.

Applications

Other Usage	For general

Packaging Information

Packaging	Specifications	Standard Packing Quantity
A	Ammo Pack	1500

Attention
1.This datasheet is downloaded from the website of Murata Manufacturing Co., Ltd. Therefore, it's specifications are subject to change or our products in it may be discontinued without advance notice. Please check with our sales representatives or product engineers before ordering.
2.This datasheet has only typical specifications because there is no space for detailed specifications.
Therefore, please review our product specifications or consult the approval sheet for product specifications before ordering.

chanhvinh.com

Product Search Data Sheet

Note: This datasheet may be out of date.
Please download the latest datasheet of DSS1NB32A471Q91# from the official website of Murata Manufacturing Co., Ltd.

http://www.murata.com/en-gb/products/productdetail?partno=DSS1NB32A471Q91%23

DSS1NB32A471Q91#

"#" indicates a package specification code.

Specifications

Shape	Lead
Length	8.5mm
Length Tolerance	max.
Width	3.5mm
Width Tolerance	max.
Thickness	7.5mm
Thickness Tolerance	max.
Rated Current	6A
Operating Temperature Range	-40℃ to 85℃
Mass(typ.)	0.45g
Number of Circuit	1
Insulation Resistance(min.)	1000MΩ
Rated Voltage	100Vdc
Withstanding Voltage	250Vdc
Capacitance	470pF
Capacitance Tolerance	±10%
Structure/Shape	Small type beads inside (straight)

Attention
1.This datasheet is downloaded from the website of Murata Manufacturing Co., Ltd. Therefore, it's specifications are subject to change or our products in it may be discontinued without advance notice. Please check with our sales representatives or product engineers before ordering.
2.This datasheet has only typical specifications because there is no space for detailed specifications.
Therefore, please review our product specifications or consult the approval sheet for product specifications before ordering.

chanhvinh.com

Product Search Data Sheet

Note: This datasheet may be out of date.
Please download the latest datasheet of DSS1NB32A471Q91# from the official website of Murata Manufacturing Co., Ltd.

http://www.murata.com/en-gb/products/productdetail?partno=DSS1NB32A471Q91%23

DSS1NB32A471Q91#

"#" indicates a package specification code.

Product Data

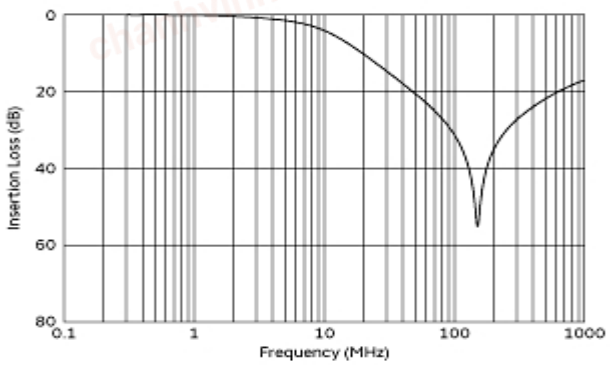

Insertion Loss Characteristics

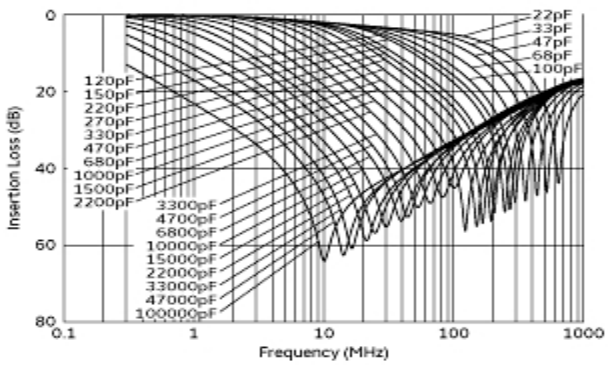

Insertion Loss Characteristics (Main Items)

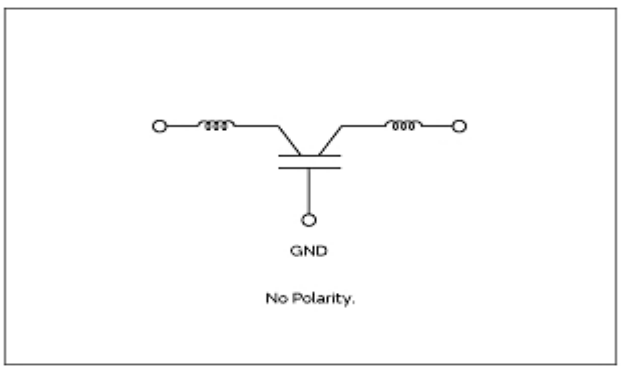

Equivalent Circuit

Attention
1.This datasheet is downloaded from the website of Murata Manufacturing Co., Ltd. Therefore, it's specifications are subject to change or our products in it may be discontinued without advance notice. Please check with our sales representatives or product engineers before ordering.
2.This datasheet has only typical specifications because there is no space for detailed specifications.
Therefore, please review our product specifications or consult the approval sheet for product specifications before ordering.