chanhvinh.com

DATASHEET

BU-1420791821

(CONN SMA JACK STR 50 OHM EDGE MOUNT)

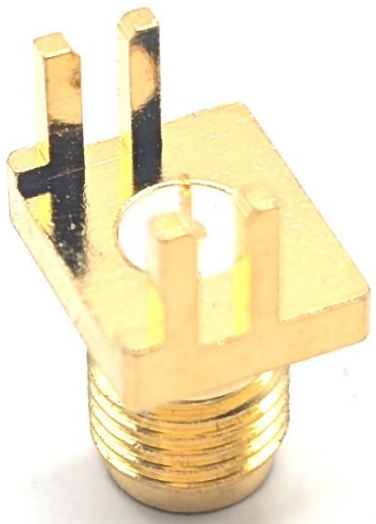

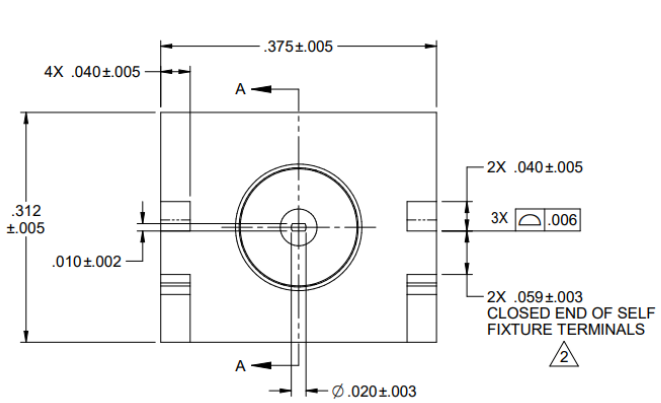

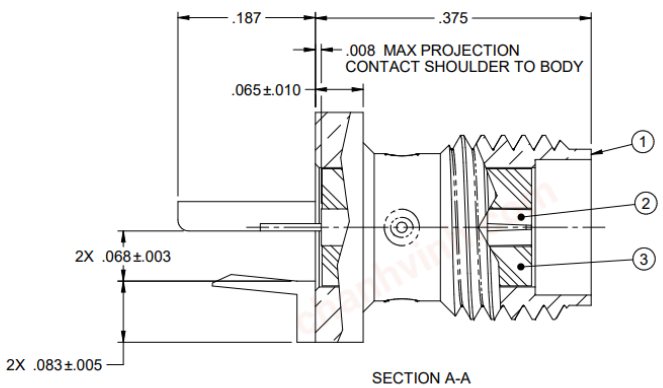

(Dimensions in Inches)

Mueller Electric Company
2850 Gilchrist Rd. Bld 5A
Akron, OH 44305

www.muellerelectric.com

Toll Free: 800.955.2629
Phone: 330.780.2525
Fax: 330.780.2524

chanhvinh.com

- Impedance: 50 Ohms
- Frequency Range: 0-18 GHz
- Working Voltage: 335V at Sea Level
- Dielectric Withstanding Voltage: 1000V min at sea level
- Contact resistance: <3 milliohms
- Mating Torque: 7-10 Inch Pounds
- Material:
  - (1) Body – 1U” Gold plated Brass
  - (2) Contact – 5U” Gold plated Beryllium Copper
  - (3) Insulator – Teflon
- Meets or exceeds the applicable paragraph of MIL-PRF-39012
- Operating Temperature: -65°C (-85°F) to 165°C (329°F)
- RoHS 3 Compliant

Mueller Electric Company
2850 Gilchrist Rd. Bld 5A
Akron, OH 44305

www.muellerelectric.com

Toll Free: 800.955.2629
Phone: 330.780.2525
Fax: 330.780.2524