chanhvinh.com

USB3320

Highly Integrated Full Featured Hi-Speed USB 2.0 ULPI Transceiver

Features

- Integrated ESD protection circuits
  - Up to ±15kV IEC Air Discharge without external devices
- Over-Voltage Protection circuit (OVP) protects the VBUS pin from continuous DC voltages up to 30V
- Integrated USB Switch
  - No degradation of Hi-Speed electrical characteristics
  - Allows single USB port of connection by providing switching function for:
    - –Battery charging
    - –Stereo and mono/mic audio
    - –USB Full-Speed/Low-Speed data
- flexPWR® Technology
  - Low current design ideal for battery powered applications
  - “Sleep” mode tri-states all ULPI pins and places the part in a low current state
  - 1.8V to 3.3V IO Voltage (±10%)
- Integrated battery to 3.3V regulator
  - 2.2uF bypass capacitor
  - 100mV dropout voltage
- “Wrapper-less” design for optimal timing performance and design ease
  - Low Latency Hi-Speed Receiver (43 Hi-Speed clocks Max) allows use of legacy UTMI Links with a ULPI bridge
- Selectable Reference Clock Frequency
  - Frequencies: 12, 13, 19.2, 24, 26, 27, 38.4, 52 or 60MHz - pin selectable
- External Reference Clock operation available
  - ULPI Input Clock Mode (60MHz sourced by Link)
  - 0 to 3.6V input drive tolerant
  - Able to accept “noisy” clock sources as reference to internal, low-jitter PLL
- Internal Oscillator operation available
- This mode requires external Quartz Crystal or Ceramic Resonator
- Smart detection circuits allow identification of USB charger, headset, or data cable insertion
- Includes full support for the optional On-The-Go (OTG) protocol detailed in the On-The-Go Supplement Revision 2.0 specification
- Supports Headset Audio Mode
- Supports the OTG Host Negotiation Protocol (HNP) and Session Request Protocol (SRP)
- UART mode for non-USB serial data transfers
- Internal 5V cable short-circuit protection of ID, DP and DM lines to VBUS or ground
- Industrial Operating Temperature -40°C to +85°C
- 32-pin, QFN RoHS Compliant Package (5 x 5 x 0.90 mm height)

Applications

The USB3320 is targeted for any application where a Hi-Speed USB connection is desired and when board space, power, and interface pins must be minimized.

The USB3320 is well suited for:

- Networking
- Audio Video
- Medical
- Industrial Computers
- Printers
- Repeaters
- Communication

© 2014 Microchip Technology Inc.

chanhvinh.com

TO OUR VALUED CUSTOMERS

It is our intention to provide our valued customers with the best documentation possible to ensure successful use of your Microchip products. To this end, we will continue to improve our publications to better suit your needs. Our publications will be refined and enhanced as new volumes and updates are introduced.

If you have any questions or comments regarding this publication, please contact the Marketing Communications Department via E-mail at **docerrors@microchip.com**. We welcome your feedback.

Most Current Data Sheet

To obtain the most up-to-date version of this data sheet, please register at our Worldwide Web site at:

http://www.microchip.com

You can determine the version of a data sheet by examining its literature number found on the bottom outside corner of any page. The last character of the literature number is the version number, (e.g., DS30000000A is version A of document DS30000000).

Errata

An errata sheet, describing minor operational differences from the data sheet and recommended workarounds, may exist for current devices. As device/documentation issues become known to us, we will publish an errata sheet. The errata will specify the revision of silicon and revision of document to which it applies.

To determine if an errata sheet exists for a particular device, please check with one of the following:

- Microchip's Worldwide Web site; http://www.microchip.com
- Your local Microchip sales office (see last page)

When contacting a sales office, please specify which device, revision of silicon and data sheet (include -literature number) you are using.

Customer Notification System

Register on our web site at **www.microchip.com** to receive the most current information on all of our products.

© 2014 Microchip Technology Inc.

chanhvinh.com

Table of Contents

1.0 Introduction 4
2.0 USB3320 Pin Locations and Definitions 6
3.0 Limiting Values 9
4.0 Electrical Characteristics 10
5.0 Architecture Overview 17
6.0 ULPI Operation 33
7.0 ULPI Register Map 49
8.0 Application Notes 58
9.0 Package Information 63
Appendix A: Data Sheet Revision History 66
The Microchip Web Site 67
Customer Change Notification Service 67
Customer Support 67
Product Identification System 68

chanhvinh.com
chanhvinh.com
chanhvinh.com
chanhvinh.com
chanhvinh.com

chanhvinh.com

USB3320

1.0 INTRODUCTION

1.1 General Description

The Microchip USB3320 is a Hi-Speed USB 2.0 Transceiver that provides a configurable physical layer (PHY) solution and is an excellent match for a wide variety of products. Both commercial and industrial temperature applications are supported.

The frequency of the reference clock is user selectable. The USB3320 includes an internal oscillator that may be used with either a quartz crystal or a ceramic resonator. Alternatively, the crystal input can be driven by an external clock oscillator. Another option is the use of a 60MHz external clock when using the ULPI Input Clock mode.

Several advanced features make the USB3320 the transceiver of choice by reducing both electrical bill of material (eBOM) part count and printed circuit board (PCB) area. Outstanding ESD robustness eliminates the need for external ESD protection devices in typical applications. The internal Over-Voltage Protection circuit (OVP) protects the USB3320 from voltages up to 30V. By using a reference clock from the Link, the USB3320 removes the cost of a dedicated crystal reference from the design. And the integrated USB switch enables unique product features with a single USB port of connection.

The USB3320 meets all of the electrical requirements to be used as a Hi-Speed USB Host, Device, or an On-the-Go (OTG) transceiver. In addition to the supporting USB signaling, the USB3320 also provides USB UART mode and USB Audio mode.

USB3320 uses the industry standard UTMI+ Low Pin Interface (ULPI) to connect the USB Transceiver to the Link. ULPI uses a method of in-band signaling and status byte transfers between the Link and transceiver to facilitate a USB session with only 12 pins.

The USB3320 uses Microchip's "wrapper-less" technology to implement the ULPI interface. This "wrapper-less" technology allows the transceiver to achieve a low latency transmit and receive time. Microchip's low latency transceiver allows an existing UTMI Link to be reused by adding a UTMI to ULPI bridge. By adding a bridge to the ASIC the existing and proven UTMI Link IP can be reused.

FIGURE 1-1: USB3320 BLOCK DIAGRAM

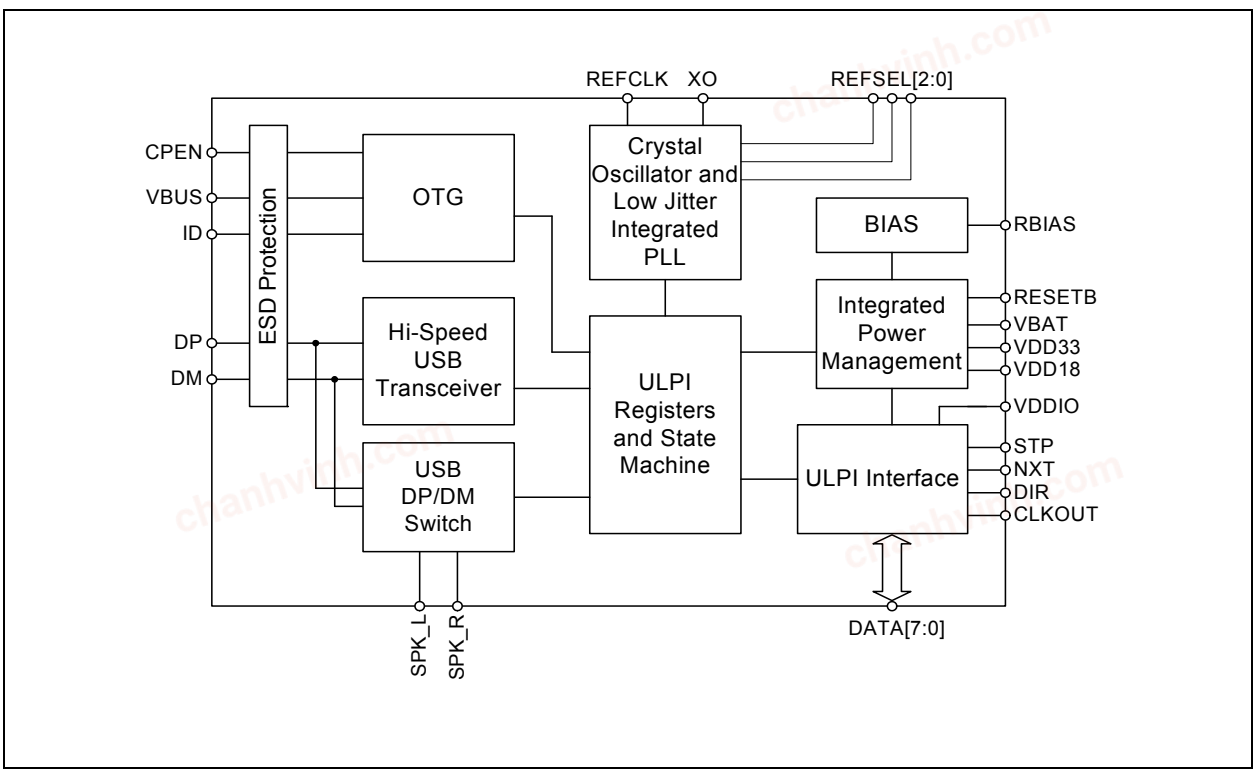

© 2014 Microchip Technology Inc.

chanhvinh.com

The USB3320 includes an integrated 3.3V Low Drop Out (LDO) regulator that may optionally be used to generate 3.3V from power applied at the **VBAT** pin. The voltage on the **VBAT** pin can range from 3.1 to 5.5V. The regulator dropout voltage is less than 100mV which allows the transceiver to continue USB signaling when the voltage on **VBAT** drops to 3.1V. The USB transceiver will continue to operate at lower voltages, although some parameters may be outside the limits of the USB specifications. If the user would like to provide a 3.3V supply to the USB3320, the **VBAT** and **VDD33** pins should be connected together as described in Section 5.5.1.

The USB3320 also includes integrated pull-up resistors that can be used for detecting the attachment of a USB Charger. By sensing the attachment to a USB Charger, a product using the USB3320 can charge its battery at more than the 500mA allowed when charging from a USB Host. Please see Microchip Application Note AN 19.7 - Battery Charging Using Microchip USB Transceivers for more information on battery charging.

In USB UART mode, the USB3320 **DP** and **DM** pins are redefined to enable pass-through of asynchronous serial data. The USB3320 can only enter UART mode when the user programs the part into this mode, as described in Section 6.5.1.

In USB audio mode, a switch connects the **DP** pin to the **SPK_R** pin, and another switch connects he **DM** pin to the **SPK_L** pin. These switches are shown in the lower left-hand corner of Figure 5.1. The USB3320 can be configured to enter USB audio mode as described in Section 6.5.2. In addition, these switches are on when the **RESETB** pin of the USB3320 is asserted. The USB audio mode enables audio signaling from a single USB port of connection, and the switches may also be used to connect Full Speed USB from another transceiver onto the USB cable.

1.2 Reference Documents

- Universal Serial Bus Specification, Revision 2.0, April 27, 2000
- On-The-Go Supplement to the USB 2.0 Specification, Revision 2.0, May 8, 2009
- USB Specification Revision 2.0 "Pull-up/pull-down resistors" ECN (27% Resistor ECN)
- USB 2.0 Transceiver Macrocell Interface (UTMI) Specification, Version 1.02, May 27, 2000
- UTMI+ Specification, Revision 1.0, February 25, 2004
- UTMI+ Low Pin Interface (ULPI) Specification, Revision 1.1, October 20th, 2004
- Technical Requirements and Test Methods of Charger and Interface for Mobile Telecommunication Terminal Equipment (Chinese Charger Specification Approval Draft 11/29/2006)

chanhvinh.com

chanhvinh.com

2.0 USB3320 PIN LOCATIONS AND DEFINITIONS

2.1 USB3320 Pin Locations and Descriptions

2.1.1 PACKAGE DIAGRAM WITH PIN LOCATIONS

The illustration below is viewed from the top of the package.

FIGURE 2-1: USB3320 PIN LOCATIONS - TOP VIEW

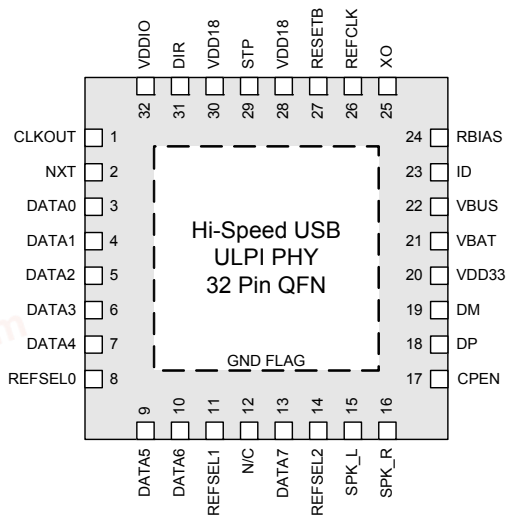

2.1.2 PIN DEFINITIONS

The following table details the pin definitions for the figure above.

TABLE 2-1: USB3320 PIN DESCRIPTION

Pin	Name	Direction/ Type	Active Level	Description
1	**CLKOUT**	Output, CMOS	N/A	**ULPI Output Clock Mode:** 60MHz ULPI clock output. All ULPI signals are driven synchronous to the rising edge of this clock. **ULPI Input Clock Mode:** This pin is connected to VDDIO to configure 60MHz ULPI Input Clock mode as described in Section 5.4.1. Following POR or hardware reset, the voltage at **CLKOUT** must not exceed V_{IH_ED} as provided inTable 4-4.
2	**NXT**	Output, CMOS	High	The transceiver asserts **NXT** to throttle the data. When the Link is sending data to the transceiver, **NXT** indicates when the current byte has been accepted by the transceiver. The Link places the next byte on the data bus in the following clock cycle.
3	**DATA[0]**	I/O, CMOS	N/A	ULPI bi-directional data bus.

© 2014 Microchip Technology Inc.

chanhvinh.com

TABLE 2-1: USB3320 PIN DESCRIPTION (CONTINUED)

Pin	Name	Direction/ Type	Active Level	Description
4	**DATA[1]**	I/O, CMOS	N/A	ULPI bi-directional data bus.
5	**DATA[2]**	I/O, CMOS	N/A	ULPI bi-directional data bus.
6	**DATA[3]**	I/O, CMOS	N/A	ULPI bi-directional data bus.
7	**DATA[4]**	I/O, CMOS	N/A	ULPI bi-directional data bus.
8	**REFSEL[0]**	Input, CMOS	N/A	This signal, along with **REFSEL[1]** and **REFSEL[2]** selects one of the available reference frequencies as defined in Table 5-10. Note: This signal must be tied to VDDIO when in ULPI 60MHz REFCLK IN mode.
9	**DATA[5]**	I/O, CMOS	N/A	ULPI bi-directional data bus.
10	**DATA[6]**	I/O, CMOS	N/A	ULPI bi-directional data bus.
11	**REFSEL[1]**	Input, CMOS	N/A	This signal, along with **REFSEL[0]** and **REFSEL[2]** selects one of the available reference frequencies as defined in Table 5-10. Note: This signal must be tied to VDDIO when in ULPI 60MHz REFCLK IN mode.
12	**N/C**		N/A	This pin must not be connected.
13	**DATA[7]**	I/O, CMOS	N/A	ULPI bi-directional data bus.
14	**REFSEL[2]**	Input, CMOS	N/A	This signal, along with **REFSEL[0]** and **REFSEL[1]** selects one of the available reference frequencies as defined in Table 5-10. Note: This signal must be tied to VDDIO when in ULPI 60MHz REFCLK IN mode.
15	**SPK_L**	I/O, Analog	N/A	USB switch in/out for DM signals
16	**SPK_R**	I/O, Analog	N/A	USB switch in/out for DP signals
17	**CPEN**	Output, CMOS	N/A	External 5V supply enable. Controls the external V_{BUS} power switch. **CPEN** is low on POR.
18	**DP**	I/O, Analog	N/A	D+ pin of the USB cable.
19	**DM**	I/O, Analog	N/A	D- pin of the USB cable.
20	**VDD33**	Power	N/A	3.3V Regulator Output. A 2.2uF (<1 ohm ESR) bypass capacitor to ground is required for regulator stability. The bypass capacitor should be placed as close as possible to the USB3320.
21	**VBAT**	Power	N/A	Regulator input.

chanhvinh.com

TABLE 2-1: USB3320 PIN DESCRIPTION (CONTINUED)

Pin	Name	Direction/ Type	Active Level	Description
22	VBUS	I/O, Analog	N/A	This pin connects to an external resistor (R_{VBUS}) connected to the VBUS pin of the USB cable. This pin is used for the VBUS comparator inputs and for VBUS pulsing during session request protocol. See Table 5-7, "Required RVBUS Resistor Value".
23	ID	Input, Analog	N/A	**ID** pin of the USB cable. For applications not using ID this pin can be connected to **VDD33**. For an A-Device **ID** is grounded. For a B-Device **ID** is floated.
24	RBIAS	Analog, CMOS	N/A	Bias Resistor pin. This pin requires an 8.06kΩ (±1%) resistor to ground, placed as close as possible to the USB3320. Nominal voltage during ULPI operation is 0.8V.
25	XO	Output, CMOS	N/A	External resonator pin. When using an external clock on **REFCLK**, this pin should be floated.
26	REFCLK	Input, CMOS	N/A	**ULPI Output Clock Mode:** Reference frequency as defined in Table 5-10. **ULPI Input Clock Mode:** 60MHz ULPI clock input.
27	RESETB	Input, CMOS,	Low	When low, the part is suspended with all ULPI outputs tri-stated. When high, the USB3320 will operate as a normal ULPI device, as described in Section 5.5.2. The state of this pin may be changed asynchronously to the clock signals. When asserted for a minimum of 1 microsecond and then de-asserted, the ULPI registers are reset to their default state and all internal state machines are reset.
28	VDD18	Power	N/A	External 1.8V Supply input pin. This pad needs to be bypassed with a 0.1uF capacitor to ground, placed as close as possible to the USB3320.
29	STP	Input, CMOS	High	The Link asserts **STP** for one clock cycle to stop the data stream currently on the bus. If the Link is sending data to the transceiver, **STP** indicates the last byte of data was on the bus in the previous cycle.
30	VDD18	Power	N/A	External 1.8V Supply input pin. This pad needs to be bypassed with a 0.1uF capacitor to ground, placed as close as possible to the USB3320.
31	DIR	Output, CMOS	N/A	Controls the direction of the data bus. When the transceiver has data to transfer to the Link, it drives **DIR** high to take ownership of the bus. When the transceiver has no data to transfer it drives **DIR** low and monitors the bus for commands from the Link.
32	VDDIO	Power	N/A	External 1.8V to 3.3V ULPI supply input pin. This voltage sets the value of V_{OH} for the ULPI signals. This pad needs to be bypassed with a 0.1uF capacitor to ground, placed as close as possible to the USB3320.
FLAG	GND	Ground	N/A	Ground.

© 2014 Microchip Technology Inc.

chanhvinh.com

3.0 LIMITING VALUES

3.1 Absolute Maximum Ratings

TABLE 3-1: ABSOLUTE MAXIMUM RATINGS

Parameter	Symbol	Condition	MIN	TYP	MAX	Units
VBUS, **VBAT**, **ID**, **CPEN**, **DP**, **DM**, **SPK_L**, and **SPK_R** voltage to **GND**	V_{MAX_5V}	Voltage measured at pin. **VBUS** tolerant to 30V with external R_{VBUS}.	-0.5		+6.0	V
Maximum **VDD18** voltage to Ground	V_{MAX_18V}		-0.5		2.5	V
Maximum **VDDIO** voltage to Ground	V_{MAX_IOV}	**VDD18** = V_{DD18}	-0.5		4.0	V
Maximum **VDDIO** voltage to Ground	V_{MAX_IOV}	**VDD18** = 0V	-0.5		0.7	V
Maximum **VDD33** voltage to Ground	V_{MAX_33V}		-0.5		4.0	V
Maximum I/O voltage to Ground	V_{MAX_IN}		-0.5		V_{DDIO} + 0.7	V
Operating Temperature	T_{MAX_OP}		-40		85	°C
Storage Temperature	T_{MAX_STG}		-55		150	°C

Note: Stresses beyond those listed under “Absolute Maximum Ratings” may cause permanent damage to the device. Exposure to absolute maximum rating conditions for extended periods may affect device reliability.

3.2 Recommended Operating Conditions

TABLE 3-2: RECOMMENDED OPERATING CONDITIONS

Parameter	Symbol	Condition	MIN	TYP	MAX	Units
VBAT to **GND**	V_{VBAT}		3.1		5.5	V
VDD33 to **GND**	V_{DD33}		3.0	3.3	3.6	V
VDDIO to **GND**	V_{DDIO}	$\boldsymbol{VDDIO} \geq \boldsymbol{VDD18}(min)$	1.6	1.8-3.3	3.6	V
VDD18 to **GND**	V_{DD18}		1.6	1.8	2.0	V
Input Voltage on Digital Pins (**RESETB**, **STP**, **DIR**, **NXT**, **DATA[7:0]**)	V_I		0.0		V_{DDIO}	V
Voltage on Analog I/O Pins (**DP**, **DM**, **ID**, **CPEN**, **SPK_L**, **SPK_R**)	$V_{I(I/O)}$		0.0		V_{DD33}	V
VBUS to **GND**	V_{VMAX}		0.0		5.5	V
Ambient Temperature	T_A		-40		85	°C

chanhvinh.com

4.0 ELECTRICAL CHARACTERISTICS

The following conditions are assumed unless otherwise specified:

V_{VBAT} = 3.1 to 5.5V; V_{DD18} = 1.6 to 2.0V; V_{DDIO} = 1.6 to 2.0V; V_{SS} = 0V; T_A = -40°C to +85°C

The current for 3.3V circuits is sourced at the VBAT pin, except when using an external 3.3V supply as shown in Figure 5-7.

4.1 Operating Current

TABLE 4-1: ELECTRICAL CHARACTERISTICS: OPERATING CURRENT

Parameter	Symbol	Condition	MIN	TYP	MAX	Units
Synchronous Mode Current (Default Configuration)	$I_{33AVG(SYNC)}$	Start-up sequence defined in Section 5.5.4 has completed.		7.5		mA
	$I_{18AVG(SYNC)}$			28.0		mA
	$I_{IOAVG(SYNC)}$			4.1		mA
Synchronous Mode Current (HS USB operation)	$I_{33AVG(HS)}$	Active USB Transfer		11.1		mA
	$I_{18AVG(HS)}$			29.4		mA
	$I_{IOAVG(HS)}$			5.9		mA
Synchronous Mode Current (FS/LS USB operation)	$I_{33AVG(FS)}$	Active USB Transfer		6.3		mA
	$I_{18AVG(FS)}$			22.5		mA
	$I_{IOAVG(FS)}$			5.0		mA
Serial Mode Current (FS/LS USB) Note 4-1	$I_{33AVG(FS_S)}$			5.6		mA
	$I_{18AVG(FS_S)}$			2.4		mA
	$I_{IOAVG(FS_S)}$			86		uA
USB UART Current Note 4-1	$I_{33AVG(UART)}$			5.6		mA
	$I_{18AVG(UART)}$			2.4		mA
	$I_{IOAVG(UART)}$			58		uA
Low Power Mode Note 4-2	$I_{DD33(LPM)}$	V_{VBAT} = 4.2V V_{DD18} = 1.8V V_{DDIO} = 1.8V		18.8		uA
	$I_{DD18(LPM)}$			0.7		uA
	$I_{DDIO(LPM)}$			30		uA
Standby Mode	$I_{DD33(RSTB)}$	RESETB = 0 V_{VBAT} = 4.2V V_{DD18} = 1.8V V_{DDIO} = 1.8V		18		uA
	$I_{DD18(RSTB)}$			0.6		uA
	$I_{DDIO(RSTB)}$			0.1		uA

Note 4-1 *ClockSuspendM* bit = 0.

Note 4-2 SessEnd, VbusVld, and IdFloat comparators disabled. STP Interface protection disabled.

© 2014 Microchip Technology Inc.

chanhvinh.com

4.2 Clock Specifications

TABLE 4-2: ULPI CLOCK SPECIFICATIONS

Parameter	Symbol	Condition	MIN	TYP	MAX	Units
Suspend Recovery Time Note 4-3	T_{START}	26MHz **REFCLK**		1.03	2.28	ms
		12MHz **REFCLK**		2.24	3.49	ms
		52MHz **REFCLK**		0.52	1.77	ms
		24MHz **REFCLK**		1.12	2.37	ms
		19.2MHz **REFCLK**		1.40	2.65	ms
		27MHz **REFCLK**		1.00	2.25	ms
		38.4MHz **REFCLK**		0.70	1.95	ms
		13MHz **REFCLK**		2.07	3.32	ms
PHY Preparation Time	T_{PREP}	60MHz **REFCLK** **ULPI Input Clock Mode**	0.4	0.45	0.5	ms
CLKOUT Duty Cycle	DC_{CLKOUT}	**ULPI Input Clock Mode**	45		55	%
REFCLK Duty Cycle	DC_{REFCLK}		20		80	%
REFCLK Frequency Accuracy	F_{REFCLK}		-500		+500	PPM

Note 4-3 The Suspend Recovery Time is measured from the start of the REFCLK to when the USB3320 de-asserts **DIR**.

Note: The USB3320 uses the *AutoResume* feature, Section 6.2.4.4, to allow a host start-up time of less than 1ms.

4.3 ULPI Interface Timing

TABLE 4-3: ULPI INTERFACE TIMING

Parameter	Symbol	Condition	MIN	TYP	MAX
60MHz ULPI Output Clock Note 4-4					
Setup time (STP, data in)	T_{SC}, T_{SD}	Model-specific **REFCLK**	5.0		ns
Hold time (STP, data in)	T_{HC}, T_{HD}	Model-specific **REFCLK**	0.0		ns
Output delay (control out, 8-bit data out)	T_{DC}, T_{DD}	Model-specific **REFCLK**	1.0	3.5	ns
60MHz ULPI Input Clock					
Setup time (STP, data in)	T_{SC}, T_{SD}	60MHz **REFCLK**	1.5		ns
Hold time (STP, data in)	T_{HC}, T_{HD}	60MHz **REFCLK**	-0.5		ns
Output delay (control out, 8-bit data out)	T_{DC}, T_{DD}	60Mhz **REFCLK**	1.5	6.0	ns

Note: V_{DD18} = 1.6 to 2.0V; V_{SS} = 0V; T_A = -40°C to +85°C.

Note 4-4 **REFCLK** does not need to be aligned in any way to the ULPI signals.

chanhvinh.com

4.4 Digital IO Pins

TABLE 4-4: DIGITAL IO CHARACTERISTICS: RESETB, CLKOUT, STP, DIR, NXT, DATA[7:0] & REFCLK PINS

Parameter	Symbol	Condition	MIN	TYP	MAX	Units
Low-Level Input Voltage	V_{IL}		V_{SS}		0.4 * V_{DDIO}	V
High-Level Input Voltage	V_{IH}		0.68 * V_{DDIO}		V_{DDIO}	V
High-Level Input Voltage **REFCLK** only	V_{IH}		0.68 * V_{DD18}		V_{DD33}	V
Low-Level Output Voltage	V_{OL}	I_{OL} = 8mA			0.4	V
High-Level Output Voltage	V_{OH}	I_{OH} = -8mA	V_{DDIO} - 0.4			V
High-Level Output Voltage **CPEN** Only	V_{OH}	I_{OH} = -8mA	V_{DD33} - 0.4			V
Input Leakage Current	I_{LI}		V_{DD33} - 0.4		±10	uA
Pin Capacitance	Cpin				4	pF
STP pull-up resistance	R_{STP}	*InterfaceProtectDisable* = 0	55	67	77	kΩ
DATA[7:0] pull-dn resistance	R_{DATA_PD}	*ULPI Synchronous Mode*	55	67	77	kΩ
CLKOUT External Drive	V_{IH_ED}	At start-up or following reset			0.4 * V_{DDIO}	V

4.5 DC Characteristics: Analog I/O Pins

TABLE 4-5: DC CHARACTERISTICS: ANALOG I/O PINS (DP/DM)

Parameter	Symbol	Condition	MIN	TYP	MAX	Units
LS/FS FUNCTIONALITY						
Input levels						
Differential Receiver Input Sensitivity	V_{DIFS}	| V(DP) - V(DM) |	0.2			V
Differential Receiver Common-Mode Voltage	V_{CMFS}		0.8		2.5	V
Single-Ended Receiver Low Level Input Voltage	V_{ILSE}	Note 4-6			0.8	V
Single-Ended Receiver High Level Input Voltage	V_{IHSE}	Note 4-6	2.0			V
Single-Ended Receiver Hysteresis	V_{HYSSE}		0.050		0.150	V
Output Levels						
Low Level Output Voltage	V_{FSOL}	Pull-up resistor on DP; R_L = 1.5kΩ to V_{DD33}			0.3	V
High Level Output Voltage	V_{FSOH}	Pull-down resistor on DP, DM; Note 4-6 R_L = 15kΩ to GND	2.8		3.6	V
Termination						
Driver Output Impedance for HS and FS	Z_{HSDRV}	Steady state drive	40.5	45	49.5	Ω
Input Impedance	Z_{INP}	RX, RPU, RPD disabled	1.0			MΩ
Pull-up Resistor Impedance	R_{PU}	Bus Idle, Note 4-5	0.900	1.24	1.575	kΩ
Pull-up Resistor Impedance	R_{PU}	Device Receiving, Note 4-5	1.425	2.26	3.09	kΩ

© 2014 Microchip Technology Inc.

chanhvinh.com

TABLE 4-5: DC CHARACTERISTICS: ANALOG I/O PINS (DP/DM) (CONTINUED)

Parameter	Symbol	Condition	MIN	TYP	MAX	Units
Pull-dn Resistor Impedance	R_{PD}	Note 4-5	14.25	16.9	20	kΩ
Weak Pull-up Resistor Impedance	R_{CD}	Configured by bits 4 and 5 in USB IO & Power Management register.	128	170	212	kΩ
HS FUNCTIONALITY						
Input levels						
HS Differential Input Sensitivity	V_{DIHS}	| V(DP) - V(DM) |	100			mV
HS Data Signaling Common Mode Voltage Range	V_{CMHS}		-50		500	mV
High-Speed Squelch Detection Threshold (Differential Signal Amplitude)	V_{HSSQ}	Note 4-7	100		150	mV
Output Levels						
Hi-Speed Low Level Output Voltage (DP/DM referenced to GND)	V_{HSOL}	45Ω load	-10		10	mV
Hi-Speed High Level Output Voltage (DP/DM referenced to GND)	V_{HSOH}	45Ω load	360		440	mV
Hi-Speed IDLE Level Output Voltage (DP/DM referenced to GND)	V_{OLHS}	45Ω load	-10		10	mV
Chirp-J Output Voltage (Differential)	V_{CHIRPJ}	HS termination resistor disabled, pull-up resistor connected. 45Ω load.	700		1100	mV
Chirp-K Output Voltage (Differential)	V_{CHIRPK}	HS termination resistor disabled, pull-up resistor connected. 45Ω load.	-900		-500	mV
Leakage Current						
OFF-State Leakage Current	I_{LZ}				±10	uA
Port Capacitance						
Transceiver Input Capacitance	C_{IN}	Pin to GND		5	10	pF

Note 4-5 The resistor value follows the 27% Resistor ECN published by the USB-IF.

Note 4-6 The values shown are valid when the *USB RegOutput* bits in the USB IO & Power Management register are set to the default value.

Note 4-7 An automatic waiver up to 200mV is granted to accommodate system-level elements such as measurement/test fixtures, captive cables, EMI components, and ESD suppression.

4.6 Dynamic Characteristics: Analog I/O Pins

TABLE 4-6: DYNAMIC CHARACTERISTICS: ANALOG I/O PINS (DP/DM)

Parameter	Symbol	Condition	MIN	TYP	MAX	Units
FS Output Driver Timing						
FS Rise Time	T_{FR}	C_L = 50pF; 10 to 90% of $\|V_{OH} - V_{OL}\|$	4		20	ns
FS Fall Time	T_{FF}	C_L = 50pF; 10 to 90% of $\|V_{OH} - V_{OL}\|$	4		20	ns
Output Signal Crossover Voltage	V_{CRS}	Excluding the first transition from IDLE state	1.3		2.0	V
Differential Rise/Fall Time Matching	T_{FRFM}	Excluding the first transition from IDLE state	90		111.1	%

© 2014 Microchip Technology Inc.

chanhvinh.com

TABLE 4-6: DYNAMIC CHARACTERISTICS: ANALOG I/O PINS (DP/DM) (CONTINUED)

Parameter	Symbol	Condition	MIN	TYP	MAX	Units
LS Output Driver Timing						
LS Rise Time	T_{LR}	C_L = 50-600pF; 10 to 90% of $\|V_{OH} - V_{OL}\|$	75		300	ns
LS Fall Time	T_{LF}	C_L = 50-600pF; 10 to 90% of $\|V_{OH} - V_{OL}\|$	75		300	ns
Differential Rise/Fall Time Matching	T_{LRFM}	Excluding the first transition from IDLE state	80		125	%
HS Output Driver Timing						
Differential Rise Time	T_{HSR}		500			ps
Differential Fall Time	T_{HSF}		500			ps
Driver Waveform Requirements		Eye pattern of Template 1 in USB 2.0 specification				
Hi-Speed Mode Timing						
Receiver Waveform Requirements		Eye pattern of Template 4 in USB 2.0 specification				
Data Source Jitter and Receiver Jitter Tolerance		Eye pattern of Template 4 in USB 2.0 specification				

4.7 OTG Electrical Characteristics

TABLE 4-7: OTG ELECTRICAL CHARACTERISTICS

Parameter	Symbol	Condition	MIN	TYP	MAX	Units
SessEnd trip point	$V_{SessEnd}$		0.2	0.5	0.8	V
SessVld trip point	$V_{SessVld}$		0.8	1.4	2.0	V
VbusVld trip point	$V_{VbusVld}$		4.4	4.58	4.75	V
A-Device Impedance	R_{IdGnd}	Maximum A device Impedance to ground on **ID** pin			100	kΩ
ID Float trip point	$V_{IdFloat}$		1.9	2.2	2.5	V
VBUS Pull-Up	R_{VPU}	**VBUS** to **VDD33** Note 4-8 (*ChargeVbus* = 1)	1.29	1.34	1.45	kΩ
VBUS Pull-down	R_{VPD}	**VBUS** to **GND** Note 4-8 (*DisChargeVbus* = 1)	1.55	1.7	1.85	kΩ
VBUS Impedance	R_{VB}	**VBUS** to **GND**	40	75	100	kΩ
ID pull-up resistance	R_{ID}	*IdPullup* = 1	80	100	120	kΩ
ID weak pull-up resistance	R_{IDW}	*IdPullup* = 0	1			MΩ
ID pull-dn resistance	R_{IDPD}	*IdGndDrv* = 1			1000	Ω

Note 4-8 The R_{VPD} and R_{VPU} values include the required 1kΩ external R_{VBUS} resistor.

4.8 USB Audio Switch Characteristics

TABLE 4-8: USB AUDIO SWITCH CHARACTERISTICS

Parameter	Symbol	Condition	MIN	TYP	MAX	Units
Minimum “ON” Resistance	R_{ON_Min}	$0 < V_{switch} < V_{DD33}$	2.7	5	5.8	Ω
Maximum “ON” Resistance	R_{ON_Max}	$0 < V_{switch} < V_{DD33}$	4.5	7	10	Ω
Minimum “OFF” Resistance	R_{OFF_Min}	$0 < V_{switch} < V_{DD33}$	1			MΩ

© 2014 Microchip Technology Inc.

chanhvinh.com

4.9 Regulator Output Voltages and Capacitor Requirement

TABLE 4-9: REGULATOR OUTPUT VOLTAGES AND CAPACITOR REQUIREMENT

Parameter	Symbol	Condition	MIN	TYP	MAX	Units
Regulator Output Voltage	V_{DD33}	6V > VBAT > 3.1V	3.0	3.3	3.6	V
Regulator Output Voltage	V_{DD33}	USB UART Mode & *UART RegOutput[1:0]* = 01 6V > VBAT > 3.1V	2.7	3.0	3.3	V
Regulator Output Voltage	V_{DD33}	USB UART Mode & *UART RegOutput[1:0]* = 10 6V > VBAT > 3.1V	2.47	2.75	3.03	V
Regulator Output Voltage	V_{DD33}	USB UART Mode & *UART RegOutput[1:0]* = 11 6V > VBAT > 3.1V	2.25	2.5	2.75	V
Regulator Bypass Capacitor	C_{OUT}		2.2			uF
Bypass Capacitor ESR	C_{ESR}				1	Ω

TABLE 4-10: ESD AND LATCH-UP PERFORMANCE

Parameter	Conditions	MIN	TYP	MAX	Units	Comments
ESD PERFORMANCE						
Note 4-9	Human Body Model			±8	kV	Device
System	EN/IEC 61000-4-2 Contact Discharge			±8	kV	3rd party system test
System	EN/IEC 61000-4-2 Air-gap Discharge			±15	kV	3rd party system test
LATCH-UP PERFORMANCE						
All Pins	EIA/JESD 78, Class II		150		mA	

Note 4-9 **REFCLK**, **XO, SPK_L** and **SPK_R** pins: ±5kV Human Body Model.

4.10 Piezoelectric Resonator for Internal Oscillator

The internal oscillator may be used with an external quartz crystal or ceramic resonator as described in Section 5.4.1.2. See Table 4-11 for the recommended crystal specifications. See Table 4-12 for the ceramic resonator part numbers for commercial temperature applications. At this time, the ceramic resonator does not offer sufficient temperature stability to operate over the industrial temperature range.

TABLE 4-11: USB3320 QUARTZ CRYSTAL SPECIFICATIONS

Parameter	Symbol	Condition	MIN	TYP	MAX	Notes
Crystal Cut	AT, typ					
Crystal Oscillation Mode	Fundamental Mode					
Crystal Calibration Mode	Parallel Resonant Mode					
Frequency	F_{fund}	-	Table 5-10	-	MHz	
Total Allowable PPM Budget		-	-	±500	PPM	Note 4-10
Shunt Capacitance	C_O	-	7 typ	-	pF	
Load Capacitance	C_L	-	20 typ	-	pF	
Drive Level	P_W	0.5	-	-	mW	
Equivalent Series Resistance	R_1	-	-	30	Ohm	
Operating Temperature Range		Note 4-11	-	Note 4-12	°C	
USB3320 **REFCLK** Pin Capacitance		-	3 typ	-	pF	Note 4-13
USB3320 **XO** Pin Capacitance		-	3 typ	-	pF	Note 4-13

© 2014 Microchip Technology Inc.

chanhvinh.com

Note 4-10 The required bit rate accuracy for Hi-Speed USB applications is ±500 ppm as provided in the USB 2.0 Specification. This takes into account the effect of voltage, temperature, aging, etc.

Note 4-11 0°C for commercial applications, -40°C for industrial applications.

Note 4-12 +70°C for commercial applications, +85°C for industrial applications.

Note 4-13 This number includes the pad, the bond wire and the lead frame. Printed Circuit Board (PCB) capacitance is not included in this value. The PCB capacitance value and the capacitance value of the **XO** and **REFCLK** pins are required to accurately calculate the value of the two external load capacitors.

TABLE 4-12: USB3320 CERAMIC RESONATOR PART NUMBERS

Frequency	Murata Part Number	Notes
24 MHz	CSTCE24M0XK1***-R0	Commercial Temp Only, Note 4-14
26 MHz	CSTCE26M0XK1***-R0	Commercial Temp Only, Note 4-14

Note 4-14 This is a generic part number assigned by Murata. The oscillating frequency is affected by stray capacitance on the Printed Circuit Board (PCB). Murata will assign the final part number for each customer's PCB after characterizing the customer's PCB design.

© 2014 Microchip Technology Inc.

chanhvinh.com

5.0 ARCHITECTURE OVERVIEW

The USB3320 consists of the blocks shown in the diagram below. All pull-up resistors shown in this diagram are connected internally to the **VDD33** pin.

FIGURE 5-1: USB3320 INTERNAL BLOCK DIAGRAM

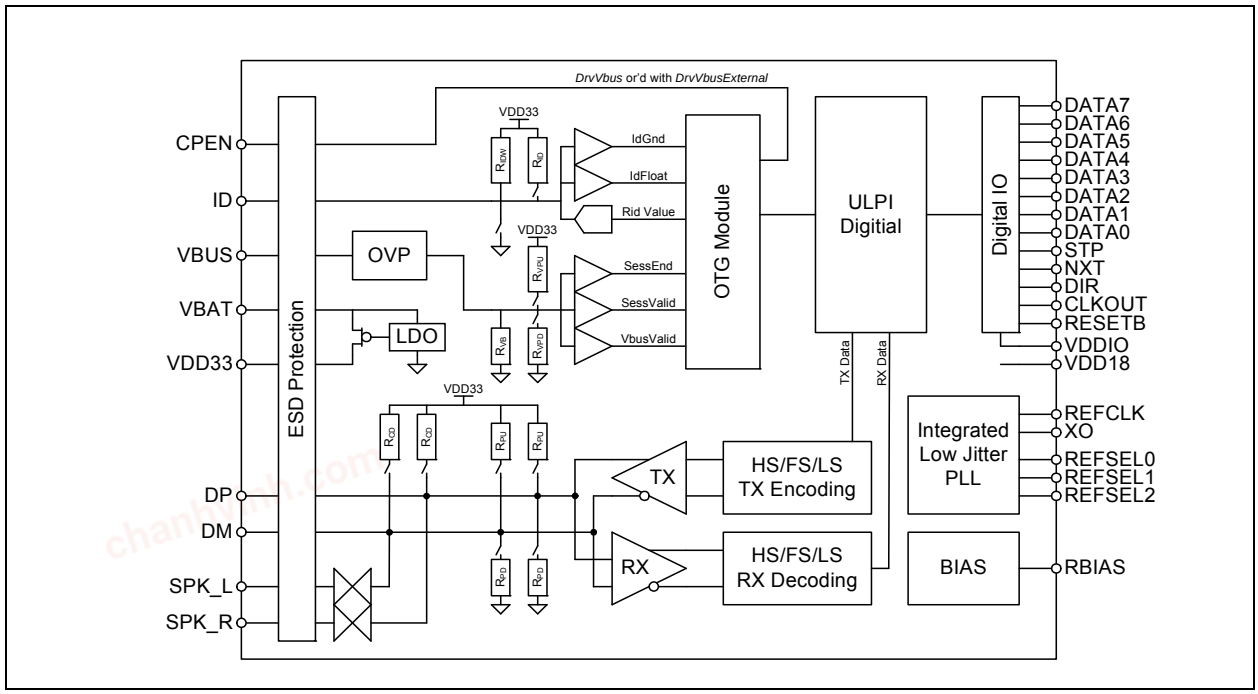

5.1 ULPI Digital Operation and Interface

This section of the USB3320 is covered in detail in Section 6.0, "ULPI Operation".

5.2 USB 2.0 Hi-Speed Transceiver

The blocks in the lower left-hand corner of Figure 5.1 interface to the DP/DM pins.

5.2.1 USB TRANSCEIVER

The USB3320 includes the receivers and transmitters that are compliant to the Universal Serial Bus Specification Rev 2.0. The DP/DM signals in the USB cable connect directly to the receivers and transmitters.

The RX block consists of a differential receiver for HS and separate receivers for FS/LS mode. Depending on the mode, the selected receiver provides the serial data stream through the multiplexer to the RX Logic block. For HS mode support, the HS RX block contains a squelch circuit to insure that noise is not interpreted as data. The RX block also includes a single-ended receiver on each of the data lines to determine the correct FS linestate.

Data from the TX Logic block is encoded, bit stuffed, serialized and transmitted onto the USB cable by the TX block. Separate differential FS/LS and HS transmitters are included to support all modes.

The USB3320 TX block meets the HS signaling level requirements in the USB 2.0 Specification when the PCB traces from the **DP** and **DM** pins to the USB connector have very little loss. In some systems, it may be desirable to compensate for loss by adjusting the HS transmitter amplitude. The *Boost* bits in the HS TX Boost register may be configured to adjust the HS transmitter amplitude at the **DP** and **DM** pins.

chanhvinh.com

5.2.2 TERMINATION RESISTORS

The USB3320 transceiver fully integrates all of the USB termination resistors on both **DP** and **DM**. This includes 1.5kΩ pull-up resistors, 15kΩ pull-down resistors and the 45Ω high speed termination resistors. These resistors require no tuning or trimming by the Link. The state of the resistors is determined by the operating mode of the transceiver when operating in synchronous mode.

The *XcvrSelect[1:0]*, *TermSelect* and *OpMode[1:0]* bits in the Function Control register, and the *DpPulldown* and *DmPulldown* bits in the OTG Control register control the configuration. The possible valid resistor combinations are shown in Table 5-1, and operation is guaranteed in only the configurations shown. If a ULPI Register Setting is configured that does not match a setting in the table, the transceiver operation is not guaranteed and the settings in the last row of Table 5-1 will be used.

- RPU_DP_EN activates the 1.5kΩ DP pull-up resistor
- RPU_DM_EN activates the 1.5kΩ DM pull-up resistor
- RPD_DP_EN activates the 15kΩ DP pull-down resistor
- RPD_DM_EN activates the 15kΩ DM pull-down resistor
- HSTERM_EN activates the 45Ω DP and DM high speed termination resistors

The USB3320 also includes two **DP** and **DM** pull-up resistors described in Section 5.8.

TABLE 5-1: DP/DM TERMINATION VS. SIGNALING MODE

Signaling Mode	ULPI Register Settings					USB3320 Termination Resistor Settings				
	XCVRSELECT[1:0]	TERMSELECT	OPMODE[1:0]	DPPULLDOWN	DMPULLDOWN	RPU_DP_EN	RPU_DM_EN	RPD_DP_EN	RPD_DM_EN	HSTERM_EN
General Settings										
Tri-State Drivers	XXb	Xb	01b	Xb	Xb	0b	0b	0b	0b	0b
Power-up or VBUS < $V_{SESSEND}$	01b	0b	00b	1b	1b	0b	0b	1b	1b	0b
Host Settings										
Host Chirp	00b	0b	10b	1b	1b	0b	0b	1b	1b	1b
Host Hi-Speed	00b	0b	00b	1b	1b	0b	0b	1b	1b	1b
Host Full Speed	X1b	1b	00b	1b	1b	0b	0b	1b	1b	0b
Host HS/FS Suspend	01b	1b	00b	1b	1b	0b	0b	1b	1b	0b
Host HS/FS Resume	01b	1b	10b	1b	1b	0b	0b	1b	1b	0b
Host low Speed	10b	1b	00b	1b	1b	0b	0b	1b	1b	0b
Host LS Suspend	10b	1b	00b	1b	1b	0b	0b	1b	1b	0b
Host LS Resume	10b	1b	10b	1b	1b	0b	0b	1b	1b	0b
Host Test J/Test_K	00b	0b	10b	1b	1b	0b	0b	1b	1b	1b
Peripheral Settings										
Peripheral Chirp	00b	1b	10b	0b	0b	1b	0b	0b	0b	0b
Peripheral HS	00b	0b	00b	0b	0b	0b	0b	0b	0b	1b
Peripheral FS	01b	1b	00b	0b	0b	1b	0b	0b	0b	0b
Peripheral HS/FS Suspend	01b	1b	00b	0b	0b	1b	0b	0b	0b	0b
Peripheral HS/FS Resume	01b	1b	10b	0b	0b	1b	0b	0b	0b	0b
Peripheral LS	10b	1b	00b	0b	0b	0b	1b	0b	0b	0b
Peripheral LS Suspend	10b	1b	00b	0b	0b	0b	1b	0b	0b	0b
Peripheral LS Resume	10b	1b	10b	0b	0b	0b	1b	0b	0b	0b

© 2014 Microchip Technology Inc.

chanhvinh.com

TABLE 5-1: DP/DM TERMINATION VS. SIGNALING MODE (CONTINUED)

Signaling Mode	ULPI Register Settings					USB3320 Termination Resistor Settings				
	XCVRSELECT[1:0]	TERMSELECT	OPMODE[1:0]	DPPULLDOWN	DMPULLDOWN	RPU_DP_EN	RPU_DM_EN	RPD_DP_EN	RPD_DM_EN	HSTERM_EN
Peripheral Test J/Test K	00b	0b	10b	0b	0b	0b	0b	0b	0b	1b
OTG device, Peripheral Chirp	00b	1b	10b	0b	1b	1b	0b	0b	1b	0b
OTG device, Peripheral HS	00b	0b	00b	0b	1b	0b	0b	0b	1b	1b
OTG device, Peripheral FS	01b	1b	00b	0b	1b	1b	0b	0b	1b	0b
OTG device, Peripheral HS/FS Suspend	01b	1b	00b	0b	1b	1b	0b	0b	1b	0b
OTG device, Peripheral HS/FS Resume	01b	1b	10b	0b	1b	1b	0b	0b	1b	0b
OTG device, Peripheral Test J/Test K	00b	0b	10b	0b	1b	0b	0b	0b	1b	1b
Any combination not defined above Note 5-1						0b	0b	0b	0b	0b

Note 1: This is the same as Table 40, Section 4.4 of the ULPI 1.1 specification.

2: USB3320 does not support operation as an upstream hub port. See Section 6.2.4.3, "UTMI+ Level 3".

Note 5-1 The transceiver operation is not guaranteed in a combination that is not defined.

The USB3320 uses the 27% resistor ECN resistor tolerances. The resistor values are shown in Table 4-5.

5.3 Bias Generator

This block consists of an internal bandgap reference circuit used for generating the driver current and the biasing of the analog circuits. This block requires an external 8.06KΩ, 1% tolerance, reference resistor connected from **RBIAS** to ground. This resistor should be placed as close as possible to the USB3320 to minimize the trace length. The nominal voltage at **RBIAS** is 0.8V +/- 10% and therefore the resistor will dissipate approximately 80µW of power.

5.4 Integrated Low Jitter PLL

The USB3320 uses an integrated low jitter phase locked loop (PLL) to provide a clean 480MHz clock required for HS USB signal quality. This clock is used by the transceiver during both transmit and receive. The USB3320 PLL requires an accurate frequency reference to be driven on the **REFCLK** pin.

5.4.1 REFCLK MODE SELECTION

The USB3320 is designed to operate in one of two available modes as shown in Table 5-2. In the first mode, a 60MHz ULPI clock is driven on the **REFCLK** pin as described in Section 5.4.1.1. In the second mode, the USB3320 generates the ULPI clock as described in Section 5.4.1.2. When using the second mode, the frequency of the reference clock is configured by **REFSEL[2]**, **REFSEL[1]** and **REFSEL[0]** as described in Section 5.10.

TABLE 5-2: REFCLK MODES

Mode	REFCLK Frequency	ULPI Clock Description
ULPI Input Clock Mode	60Mhz	Sourced by Link, driven on the **REFCLK** pin
ULPI Output Clock Mode	Table 5-10	Sourced by **USB3320** at the **CLKOUT** pin

During start-up, the USB3320 monitors the **CLKOUT** pin to determine which mode has been configured as described in Section 5.4.1.1.

chanhvinh.com

The system must not drive voltage on the **CLKOUT** pin following POR or hardware reset that exceeds the value of V_{IH_ED} provided in Table 4-4.

5.4.1.1 ULPI Input Clock Mode (60MHz REFCLK Mode)

When using ULPI Input Clock Mode, the Link must supply the 60MHz ULPI clock to the USB3320. As shown in Figure 5-2, the 60MHz ULPI Clock is connected to the **REFCLK** pin, and the **CLKOUT** pin is tied high to **VDDIO**. A simplified schematic using the ULPI Input Clock Mode is shown in Figure 8-2.

After the PLL has locked to the correct frequency, the USB3320 will de-assert **DIR** and the Link can begin using the ULPI interface. The USB3320 is guaranteed to start the clock within the time specified in Table 4-2. For Host applications, the ULPI *AutoResume* bit should be enabled. This is described in Section 6.2.4.4.

REFSEL[2], **REFSEL[1]** and **REFSEL[0]** should all be tied to VDDIO for ULPI Input Clock Mode.

FIGURE 5-2: CONFIGURING THE USB332X FOR ULPI INPUT CLOCK MODE (60 MHZ)

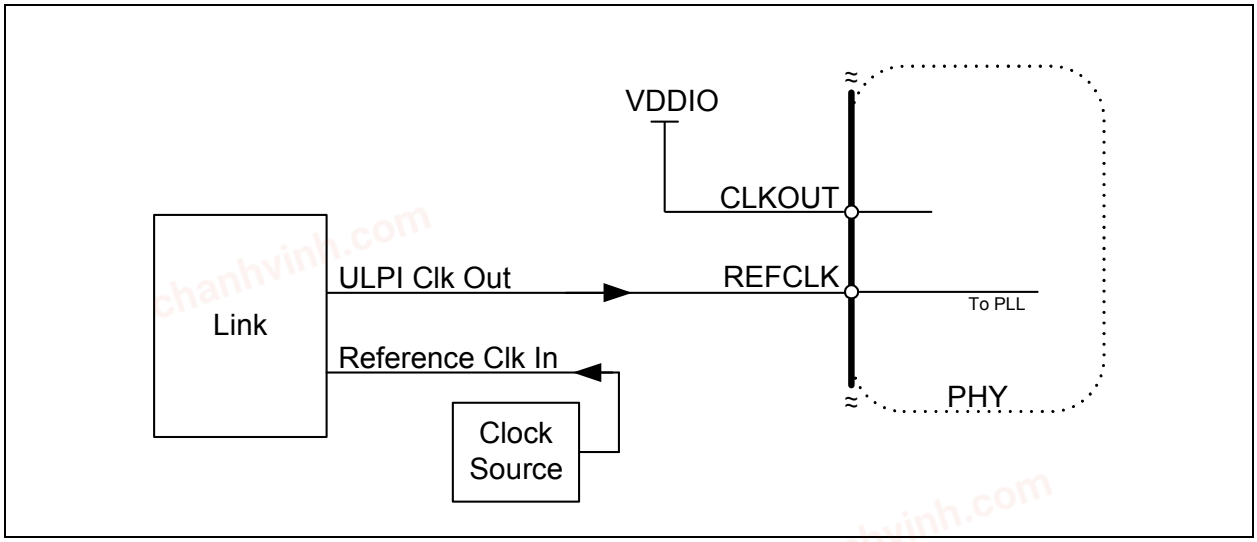

5.4.1.2 ULPI Output Clock

When using ULPI Output Clock Mode, the USB3320 generates the 60MHz ULPI clock used by the Link. The frequency of the reference clock is configured by **REFSEL[2]**, **REFSEL[1]** and **REFSEL[0]** as described in Table 5-10. As shown in Figure 5-3, the **CLKOUT** pin sources the 60MHz ULPI clock to the Link.

FIGURE 5-3: CONFIGURING THE USB332X FOR ULPI OUTPUT CLOCK MODE

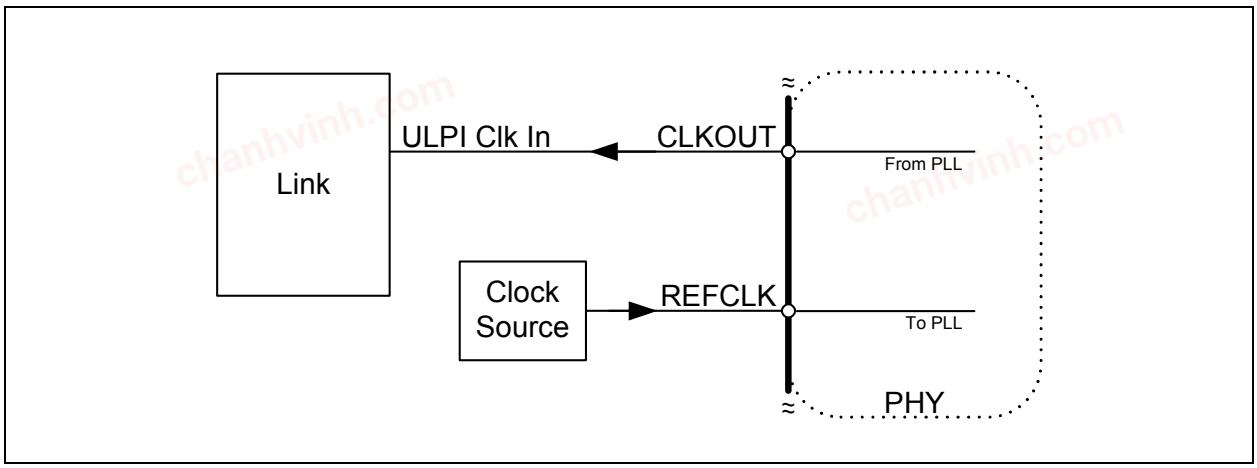

© 2014 Microchip Technology Inc.

chanhvinh.com

In this mode, the **REFCLK** pin may be driven at the reference clock frequency. Alternatively, the internal oscillator may be used with an external crystal or resonator as shown in Figure 5-4.

An example of ULPI Output Clock Mode is shown in Figure 8-1.

FIGURE 5-4: ULPI OUTPUT CLOCK MODE

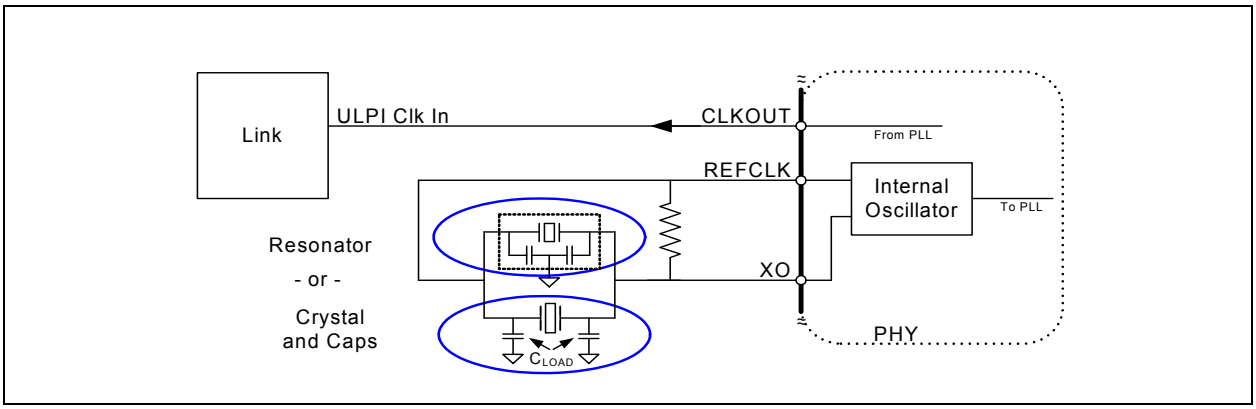

After the PLL has locked to the correct frequency, the USB3320 generates the 60MHz ULPI clock on the **CLKOUT** pin, and de-asserts **DIR** to indicate that the PLL is locked. The USB3320 is guaranteed to start the clock within the time specified in Table 4-2, and it will be accurate to within ±500ppm. For Host applications the ULPI *AutoResume* bit should be enabled. This is described in Section 6.2.4.4.

When using ULPI Output Clock Mode, the edges of the reference clock do not need to be aligned in any way to the ULPI interface signals; in other words, there is no need to align the phase of the **REFCLK** and the **CLKOUT**.

5.4.2 REFCLK AMPLITUDE

The reference clock is connected to the **REFCLK** pin as shown in the application diagrams, Figure 8-1, Figure 8-2 and Figure 8-3. The **REFCLK** pin is designed to be driven with a square wave from 0V to V_{DD18}, but can be driven with a square wave from 0V to as high as 3.6V. The USB3320 uses only the positive edge of the **REFCLK**.

If a digital reference is not available, the **REFCLK** pin can be driven by an analog sine wave that is AC coupled into the **REFCLK** pin. If using an analog clock, the DC bias should be set at the mid-point of the **VDD18** supply using a bias circuit as shown in Figure 5-5. The amplitude must be greater than 300mV peak to peak. The component values provided in Figure 5-5 are for example only. The actual values should be selected to satisfy system requirements.

The **REFCLK** amplitude must comply with the signal amplitudes shown in Table 4-4 and the duty cycle in Table 4-2.

FIGURE 5-5: EXAMPLE OF CIRCUIT USED TO SHIFT A REFERENCE CLOCK COMMON-MODE VOLTAGE LEVEL

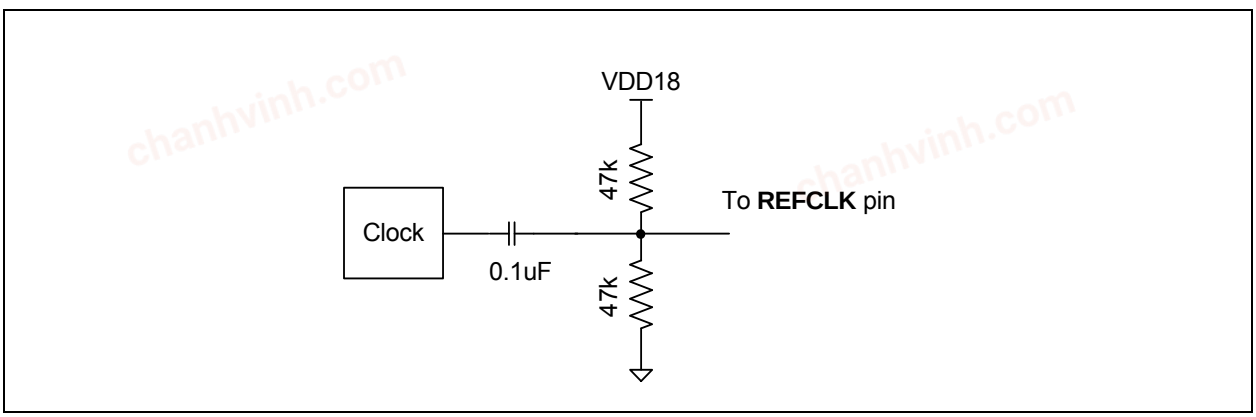

chanhvinh.com

5.4.3 REFCLK JITTER

The USB3320 is tolerant to jitter on the reference clock. The REFCLK jitter should be limited to a peak to peak jitter of less than 1nS over a 10uS time interval. If this level of jitter is exceeded when configured for either ULPI Input Clock Mode or ULPI Output Clock Mode, the USB3320 Hi-Speed eye diagram may be degraded.

The frequency accuracy of the REFCLK must meet the +/- 500ppm requirement as shown in Table 4-2.

5.4.4 REFCLK ENABLE/DISABLE

The **REFCLK** should be enabled when the **RESETB** pin is brought high. The ULPI interface will start running after the time specified in Table 4-2. If the REFCLK enable is delayed relative to the RESETB pin, the ULPI interface will start operation delayed by the same amount. The REFCLK can be run at anytime the **RESETB** pin is low without causing the USB3320 to start-up or draw current.

When the USB3320 is placed in Low Power Mode or Carkit Mode, the REFCLK can be stopped after the final ULPI register write is complete. The **STP** pin is asserted to bring the USB3320 out of Low Power Mode. The **REFCLK** should be started at the same time **STP** is asserted to minimize the USB3320 start-up time.

If the **REFCLK** is stopped while **CLKOUT** is running, the PLL will come out of lock and the frequency of the **CLKOUT** signal will decrease to the minimum allowed by the PLL design. If the **REFCLK** is stopped during a USB session, the session may drop.

5.5 Internal Regulators and POR

The USB3320 includes integrated power management functions, including a Low-Dropout regulator that can be used to generate the 3.3V USB supply, and a POR generator described in Section 5.5.2.

5.5.1 INTEGRATED LOW DROPOUT REGULATOR

The USB3320 has an integrated linear regulator. Power sourced at the **VBAT** pin is regulated to 3.3V and the regulator output is on the **VDD33** pin. To ensure stability, the regulator requires an external bypass capacitor ($C_{OUT)}$ as specified in Table 4-9 placed as close to the pin as possible.

The USB3320 regulator is designed to generate a 3.3 volt supply for the USB3320 only. Using the regulator to provide current for other circuits is not recommended and Microchip does not guarantee USB performance or regulator stability.

During USB UART mode the regulator output voltage can be changed to allow the USB3320 to work with UARTs operating at different operating voltages. The regulator output is configured to the voltages shown in Table 4-9 with the *UART RegOutput[1:0]* bits in the USB IO & Power Management register.

The USB3320 regulator can be powered in the three methods as shown below.

For USB Peripheral, Host, and OTG operations the regulator can be connected as shown in Figure 5-6 or Figure 5-7 below. For OTG operation, the **VDD33** supply on the USB3320 must be powered to detect devices attaching to the USB connector and detect a SRP during an OTG session. When using a battery to supply the USB3320, the battery voltage must be within the range of 3.1V to 5.5V.

© 2014 Microchip Technology Inc.

chanhvinh.com

FIGURE 5-6: POWERING THE USB3320 FROM A BATTERY

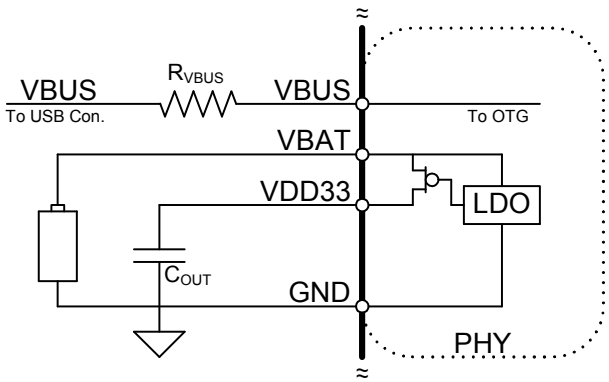

The USB3320 can be powered from an external 3.3V supply as shown below in Figure 5-7. When using the external supply, both the **VBAT** and **VDD33** pins are connected together. The bypass capacitor, C_{BYP}, is recommended when using the external supply.

FIGURE 5-7: POWERING THE USB3320 FROM A 3.3V SUPPLY

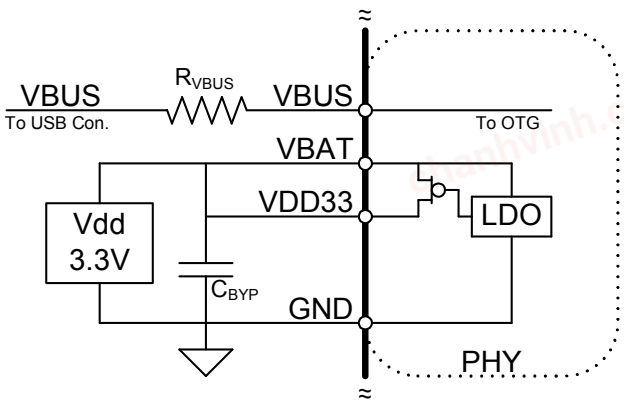

For peripheral only or host only operation, the **VBAT** supply shown below in Figure 5-8 may be connected to the **VBUS** pin of the USB connector for bus powered applications. In this configuration, external overvoltage protection is required to protect the **VBAT** supply from any transient voltage present at the **VBUS** pin of the USB connector.

chanhvinh.com

The **VBAT** input must never be exposed to a voltage that exceeds V_{VBAT}. (See Table 3-2)

FIGURE 5-8: POWERING THE USB3320 FROM VBUS

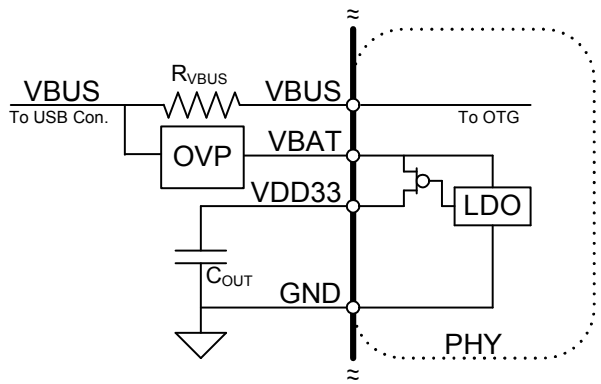

5.5.2 POWER ON RESET (POR)

The USB3320 provides a POR circuit that generates an internal reset pulse after the **VDD18** supply is stable. After the internal POR goes high and the **RESETB** pin is high, the USB3320 will release from reset and begin normal ULPI operation as described in Section 5.5.4.

The ULPI registers will power up in their default state summarized in Table 7-1 when the 1.8V supply is brought up. Cycling the 1.8 volt power supply will reset the ULPI registers to their default states. The **RESETB** pin can also be used to reset the ULPI registers to their default state (and reset all internal state machines) by bringing the pin low for a minimum of 1 microsecond and then high.

The Link is not required to assert the **RESETB** pin. A pull-down resistor is not present on the **RESETB** pin and therefore the Link must drive the **RESETB** pin to the desired state at all times (including system start-up) or connect the **RESETB** pin to **VDDIO.**

5.5.3 RECOMMENDED POWER SUPPLY SEQUENCE

For USB operation the USB3320 requires the **VBAT**, **VDD33**, **VDDIO** and **VDD18** supples. **VBAT**, **VDD33**, and **VDD18** can be applied in any order. The **VDD18** supply must be turned on and stable before the **VDDIO** supply is applied. This does not apply in cases where the **VDD18** and **VDDIO** supply pins are tied together.

When the **VBAT** supply is applied, the integrated regulator will automatically start-up and regulate **VBAT** to **VDD33**. If the **VDD33** supply is powered and the **VDD18** supply is not powered, the 3.3V circuits are powered off and the **VDD33** current will be limited as shown in Table 4-1.

The ULPI interface will start operating after the **VDD18** and **VDDIO** supplies are applied and the **RESETB** pin is brought high. The **RESETB** pin must be held low until the **VDD18** and **VDDIO** supplies are stable. If the Link is not ready to interface the USB3320, the Link may choose to hold the **RESETB** pin low until it is ready to control the ULPI interface.

TABLE 5-3: OPERATING MODE VS. POWER SUPPLY CONFIGURATION

VDD33	VDD18	RESETB	Operating Modes Available
0	0	0	Powered Off
0	1	0	RESET Mode.
0	1	1	In this configuration the ULPI interface is available and can be programed into all operating modes described in Section 6.0, "ULPI Operation". All USB signals will read 0.
1	0	X	In this mode the ULPI interface is not active and the circuits powered from the **VDD33** supply are turned off and the current will be limited to the RESET Mode current. (Note 5-2)

© 2014 Microchip Technology Inc.

chanhvinh.com

TABLE 5-3: OPERATING MODE VS. POWER SUPPLY CONFIGURATION (CONTINUED)

VDD33	VDD18	RESETB	Operating Modes Available
1	1	0	RESET Mode
1	1	1	Full USB operation as described in Section 6.0, "ULPI Operation".

Note: Anytime **VBAT** is powered per Table 3-2, the **VDD33** pin will be powered up.

Note 5-2 **VDDIO** must be powered to tri-state the ULPI interface in this configuration.

5.5.4 START-UP

The power on default state of the USB3320 is ULPI Synchronous mode. The USB3320 requires the following conditions to begin operation: the power supplies must be stable, the **REFCLK** must be present and the **RESETB** pin must be high. After these conditions are met, the USB3320 will begin ULPI operation that is described in Section 6.0, "ULPI Operation".

Figure 5-9 below shows a timing diagram to illustrate the start-up of the USB3320. At T0, the supplies are stable and the USB3320 is held in reset mode. At T1, the Link drives **RESETB** high after the **REFCLK** has started. The **RESETB** pin may be brought high asynchronously to **REFCLK**. At this point the USB3320 will drive idle on the data bus and assert **DIR** until the internal PLL has locked. After the PLL has locked, the USB3320 will check that the Link has de-asserted **STP** and at T2 it will de-assert **DIR** and begin ULPI operation.

The ULPI bus will be available as shown in Figure 5-9 in the time defined as T_{START} given in Table 4-2. If the **REFCLK** signal starts after the **RESETB** pin is brought high, then time T0 will begin when **REFCLK** starts. T_{START} also assumes that the Link has de-asserted **STP**. If the Link has held **STP** high the USB3320 will hold **DIR** high until **STP** is de-asserted. When the LINK de-asserts STP, it must drive a ULPI IDLE one cycle after **DIR** de-asserts.

FIGURE 5-9: ULPI START-UP TIMING

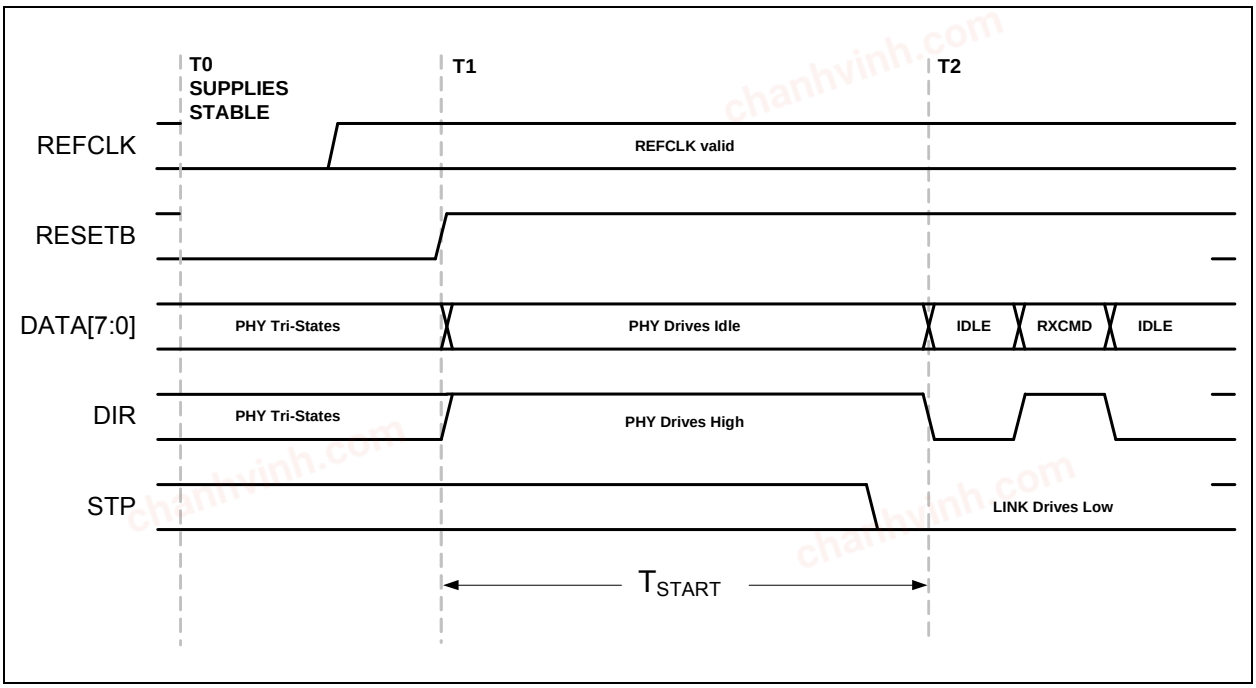

chanhvinh.com

5.6 USB On-The-Go (OTG)

The USB3320 provides full support for USB OTG protocol. OTG allows the USB3320 to be dynamically configured as a host or device depending on the type of cable inserted into the receptacle. When the Micro-A plug of a cable is inserted into the Micro-AB receptacle, the USB device becomes the A-device. When a Micro-B plug is inserted, the device becomes the B-device. The OTG A-device behaves similar to a Host while the B-device behaves similar to a peripheral. The differences are covered in the “On-The-Go Supplement to the USB 2.0 Specification”. In applications where only Host or Device is required, the OTG Module is unused.

5.6.1 ID RESISTOR DETECTION

The ID pin of the USB connector is monitored by the **ID** pin of the USB3320 to detect the attachment of different types of USB devices and cables. For device only applications that do not use the ID signal the **ID** pin should be connected to **VDD33**. The block diagram of the ID detection circuitry is shown in Figure 5-10 and the related parameters are given in Table 4-7.

FIGURE 5-10: USB3320 ID RESISTOR DETECTION CIRCUITRY

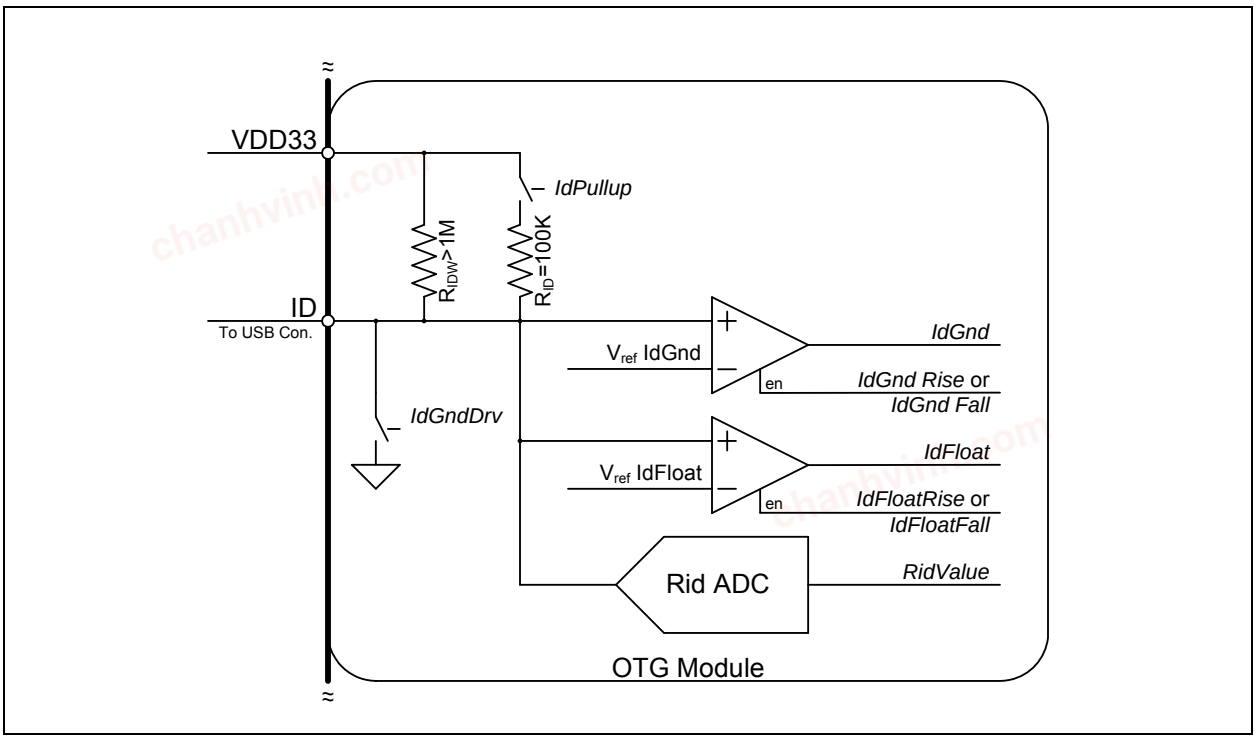

5.6.1.1 USB OTG Operation

The USB3320 can detect **ID** grounded and **ID** floating to determine if an A or B cable has been inserted. The A plug will ground the **ID** pin while the B plug will float the **ID** pin. These are the only two valid states allowed in the OTG Protocol.

To monitor the status of the **ID** pin, the Link activates the *IdPullup* bit in the OTG Control register, waits 50mS and then reads the status of the *IdGnd* bit in the USB Interrupt Status register. If an A cable has been inserted the *IdGnd* bit will read 0. If a B cable is inserted, the **ID** pin is floating and the *IdGnd* bit will read 1.

The USB3320 provides an integrated weak pull-up resistor on the **ID** pin, R_{IDW}. This resistor is present to keep the **ID** pin in a known state when the *IdPullup* bit is disabled and the **ID** pin is floated. In addition to keeping the **ID** pin in a known state, it enables the USB3320 to generate an interrupt to inform the link when a cable with a resistor to ground has been attached to the **ID** pin. The weak pull-up is small enough that the largest valid Rid resistor pulls the **ID** pin low and causes the IdGnd comparator to go low.

After the link has detected an **ID** pin state change, the RID converter can be used to determine the resistor value as described in Section 5.6.1.2.

© 2014 Microchip Technology Inc.

chanhvinh.com

5.6.1.2 Measuring ID Resistance to Ground

The Link can used the integrated resistance measurement capabilities to determine the value of an ID resistance to ground. Table 5-4 lists the valid values of resistance, to ground, that the USB3320 can detect.

TABLE 5-4: VALID VALUES OF ID RESISTANCE TO GROUND

ID Resistance to Ground	RID Value
Ground	000
75Ω +/-1%	001
102kΩ +/-1%	010
200kΩ+/-1%	011
440kΩ +/-1%	100
Floating	101

Note: IdPullUp = 0

The Rid resistance can be read while the USB3320 is in Synchronous Mode. When a resistor to ground is attached to the **ID** pin, the state of the IdGnd comparator will change. After the Link has detected **ID** transition to ground, it can use the methods described in Section 6.6 to operate the Rid converter.

5.6.1.3 Using IdFloat Comparator

Note: The ULPI specification details a method to detect a 102kΩ resistance to ground using the IdFloat comparator. This method can only detect 0ohms, 102kΩ, and floating terminations of the **ID** pin. Due to this limitation it is recommended to use the RID Converter as described in Section 5.6.1.2.

The **ID** pin can be either grounded, floated, or connected to ground with a 102kΩ external resistor. To detect the 102K resistor, set the *idPullup* bit in the OTG Control register, causing the USB3320 to apply the 100K internal pull-up connected between the **ID** pin and VDD33. Set the *idFloatRise* and *idFloatFall* bits in both the USB Interrupt Enable Rising and USB Interrupt Enable Falling registers to enable the IdFloat comparator to generate an RXCMD to the Link when the state of the IdFloat changes. As described in Figure 6-3, the alt_int bit of the RXCMD will be set. The values of IdGnd and IdFloat are shown for the three types cables that can attach to the USB Connector in Table 5-5.

TABLE 5-5: IDGND AND IDFLOAT VS. ID RESISTANCE TO GROUND

ID Resistance	IDGND	IDFLOAT
Float	1	1
102K	1	0
GND	0	0

Note: The ULPI register bits *IdPullUp*, *IdFloatRise,* and *IdFloatFall* should be enabled.

To save current when an A Plug is inserted, the internal 102kΩ pull-up resistor can be disabled by clearing the *IdPullUp* bit in the OTG Control register and the *IdFloatRise* and *IdFloatFall* bits in both the USB Interrupt Enable Rising and USB Interrupt Enable Falling registers. If the cable is removed the weak R_{IDW} will pull the **ID** pin high.

The *IdGnd* value can be read using the ULPI USB Interrupt Status register, bit 4. In host mode, it can be set to generate an interrupt when *IdGnd* changes by setting the appropriate bits in the USB Interrupt Enable Rising and USB Interrupt Enable Falling registers. The *IdFloat* value can be read by reading the ULPI Carkit Interrupt Status register bit 0.

Note: The IdGnd switch has been provided to ground the **ID** pin for future applications.

chanhvinh.com

5.6.2 VBUS MONITOR AND PULSING

The USB3320 includes all of the VBUS comparators required for OTG. The VBUSVld, SessVld, and SessEnd comparators shown in Figure 5-11 are fully integrated into the USB3320. These comparators are used to monitor changes in the VBUS voltage, and the state of each comparator can be read from the USB Interrupt Status register.

The VbusVld comparator is used by the Link, when configured as an A device, to ensure that the VBUS voltage on the cable is valid. The SessVld comparator is used by the Link when configured as both an A or B device to indicate a session is requested or valid. Finally the SessEnd comparator is used by the B-device to indicate a USB session has ended.

Also included in the VBUS Monitor and Pulsing block are the resistors used for VBUS pulsing in SRP. The resistors used for VBUS pulsing include a pull-down to ground and a pull-up to VDD33.

In some applications, voltages much greater than 5.5V may be present at the VBUS pin of the USB connector. The USB3320 includes an overvoltage protection circuit that protects the **VBUS** pin of the USB3320 from excessive voltages as described in Section 5.6.2.6, and shown in Figure 5-11.

FIGURE 5-11: USB3320 OTG VBUS BLOCK

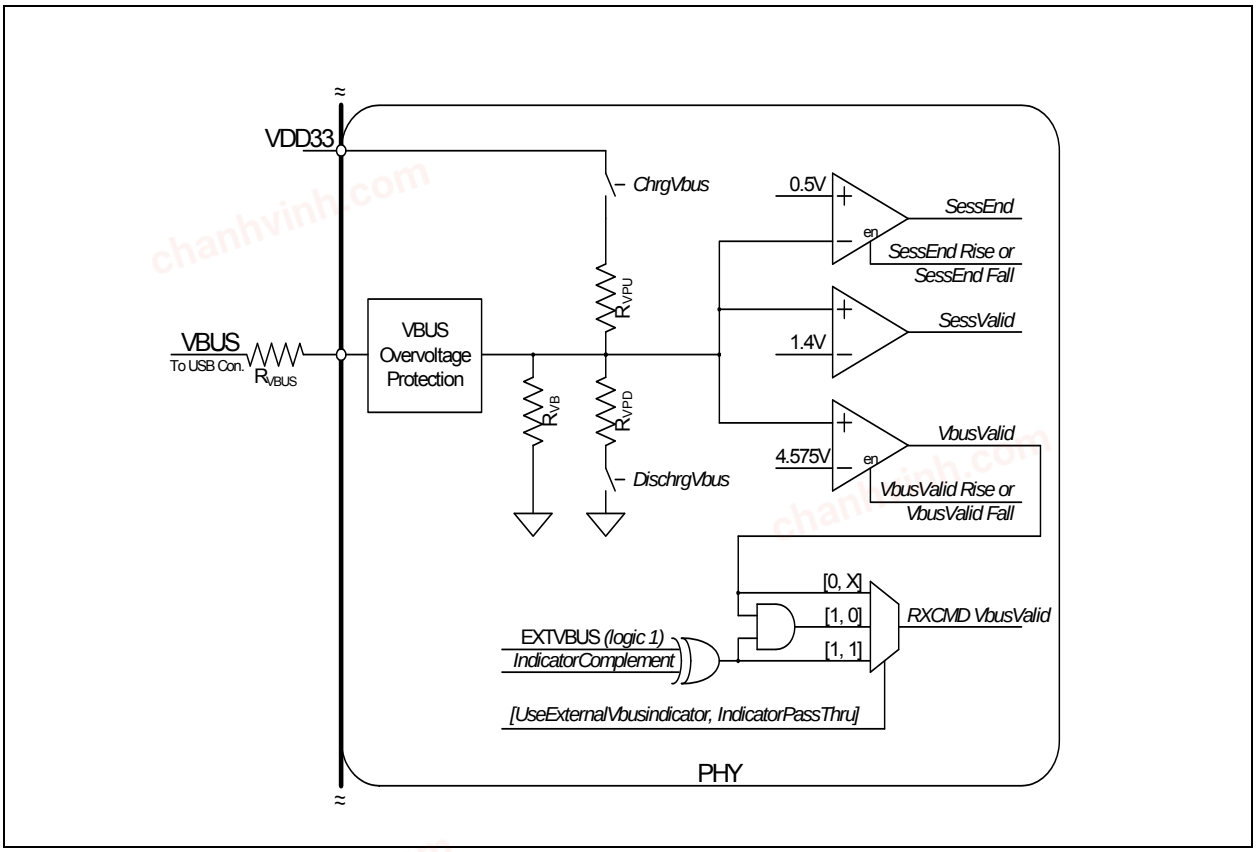

5.6.2.1 SessEnd Comparator

The SessEnd comparator is designed to trip when VBUS is less than 0.5 volts. When VBUS goes below 0.5 volts the USB session is considered to be ended, and SessEnd will transition from 0 to 1. The SessEnd comparator can be disabled by clearing this bit in both the USB Interrupt Enable Rising and USB Interrupt Enable Falling registers. When disabled, the SessEnd bit in the USB Interrupt Status register will read 0. The SessEnd comparator trip points are detailed in Table 4-7.

5.6.2.2 SessVld Comparator

The SessVld comparator is used when the transceiver is configured as both an A and B device. When configured as an A device, the SessVld is used to detect Session Request protocol (SRP). When configured as a B device, SessVld is used to detect the presence of VBUS. The SessVld interrupts can be disabled by clearing this bit in both the USB Inter-

© 2014 Microchip Technology Inc.

chanhvinh.com

rupt Enable Rising and USB Interrupt Enable Falling registers. When the interrupts are disabled, the SessVld comparator is not disabled and its state can be read in the USB Interrupt Status register. The SessVld comparator trip point is detailed in Table 4-7.

Note:	The OTG Supplement specifies a voltage range for A-Device Session Valid and B-Device Session Valid comparator. The USB3320 transceiver combines the two comparators into one and uses the narrower threshold range.

5.6.2.3 VbusVld Comparator

The final VBUS comparator is the VbusVld comparator. This comparator is only used when the USB3320 is configured as an A-device. In the USB protocol the A-device supplies the VBUS voltage and is responsible to ensure it remains within a specified voltage range. The VbusVld comparator can be disabled by clearing this bit in both the USB Interrupt Enable Rising and USB Interrupt Enable Falling registers. When disabled, bit 1 of the USB Interrupt Status register will return a 0. The VbusVld comparator trip points are detailed in Table 4-7.

The internal VbusValid comparator is designed to ensure the VBUS voltage remains above 4.4V.

The USB3320 includes the external vbus valid indicator logic as detail in the ULPI Specification. The external vbus valid indicator is tied to a logic one. The decoding of this logic is shown in Table 5-6 below. By default this logic is disabled.

TABLE 5-6: EXTERNAL VBUS INDICATOR LOGIC

Typical Application	Use External VBus Indicator	Indicator Pass Thru	Indicator Complement	RXCMD VBUS Valid Encoding Source
OTG Device	0	X	X	Internal VbusVld comparator (Default)
	1	1	0	Fixed 1
	1	1	1	Fixed 0
	1	0	0	Internal VbusVld comparator.
	1	0	1	Fixed 0
Standard Host	1	1	0	Fixed 1
	1	1	1	Fixed 0
Standard Peripheral	0	X	X	Internal VbusVld comparator. This information should not be used by the Link. (Note 5-3)

Note 5-3 A peripheral should not use VbusVld to begin operation. The peripheral should use SessVld because the internal VbusVld threshold can be above the VBUS voltage required for USB peripheral operation.

5.6.2.4 VBUS Pulsing with Pull-up and Pull-down Resistors

In addition to the internal VBUS comparators, the USB3320 also includes the integrated VBUS pull-up and pull-down resistors used for VBUS Pulsing during OTG Session Request Protocol. To discharge the VBUS voltage so that a Session Request can begin, the USB3320 provides a pull-down resistor from VBUS to Ground. This resistor is controlled by the *DischargeVbus* bit 3 of the OTG Control register. The pull-up resistor is connected between VBUS and VDD33. This resistor is used to pull VBUS above 2.1 volts so that the A-Device knows that a USB session has been requested. The state of the pull-up resistor is controlled by the bit 4 *ChargeVbus* of the OTG Control register. The Pull-Up and Pull-Down resistor values are detailed in Table 4-7.

The internal VBUS Pull-up and Pull-down resistors are designed to include the R_{VBUS} external resistor in series. This external resistor is used by the VBUS Overvoltage protection described below.

5.6.2.5 VBUS Input Impedance

The OTG Supplement requires an A-Device that supports Session Request Protocol to have a VBUS input impedance less than 100kΩ and greater the 40kΩ to ground. The USB3320 provides a 75kΩ resistance to ground, R_{VB}. The R_{VB} resistor tolerance is detailed in Table 4-7.

chanhvinh.com

5.6.2.6 VBUS Overvoltage Protection

The USB3320 provides an integrated overvoltage protection circuit to protect the **VBUS** pin from excessive voltages that may be present at the USB connector. The overvoltage protection circuit works with an external resistor (R_{VBUS}) by drawing current across the resistor to reduce the voltage at the **VBUS** pin.

When voltage at the **VBUS** pin exceeds 5.5V, the Overvoltage Protection block will sink current to ground until VBUS is below 5.5V. The current drops the excess voltage across R_{VBUS} and protects the USB3320 **VBUS** pin. The required R_{VBUS} value is dependent on the operating mode of the USB3320 as shown in Table 5-7.

TABLE 5-7: REQUIRED R_{VBUS} RESISTOR VALUE

Operating Mode	R_{VBUS}
Device only	10kΩ ±5%
OTG Capable	1kΩ ±5%
Host *UseExternalVbusIndicator = 1*	10kΩ ±5%

The Overvoltage Protection circuit is designed to protect the USB3320 from continuous voltages up to 30V on the R_{VBUS} resistor.

The R_{VBUS} resistor must be sized to handle the power dissipated across the resistor. The resistor power can be found using the equation below:

$$P_{RVBUS} = \frac{(Vprotect - 5.0)^2}{R_{VBUS}}$$

Where:

- Vprotect is the VBUS protection required
- R_{VBUS} is the resistor value, 1kΩ or 10kΩ.
- P_{RVBUS} is the required power rating of R_{VBUS}

For example, protecting a peripheral or device only application to 15V would require a 10kΩ R_{VBUS} resistor with a power rating of 0.01W. To protect an OTG product to 15V would require a 1kΩ R_{VBUS} resistor with a power rating of 0.1W.

5.6.3 DRIVING EXTERNAL VBUS

The USB3320 monitors VBUS as described in VBUS Monitor and Pulsing. For OTG and Host applications, the system is required to source 5 volts on VBUS. The USB3320 fully supports VBUS power control using an external VBUS switch as shown in Figure 8-3. The USB3320 provides an active high control signal, **CPEN**, that is dedicated to controlling the Vbus supply when configured as an A-Device.

CPEN is asserted by setting the *DrvVbus* or *DrvVbusExternal* bit of the OTG Control register. To be compatible with Link designs that support both internal and external Vbus supplies the *DrvVbus* and *DrvVbusExternal* bits in the OTG Control Register are or'd together. This enables the Link to set either bit to access the external Vbus enable (**CPEN**). This logic is shown in Figure 5-12. *DrvVbus* and *DrvVbusExternal* are set to 0 on Power On Reset (POR) as shown in Section 7.1.1.7.

© 2014 Microchip Technology Inc.

chanhvinh.com

FIGURE 5-12: USB3320 DRIVES CONTROL SIGNAL (CPEN) TO EXTERNAL VBUS SWITCH

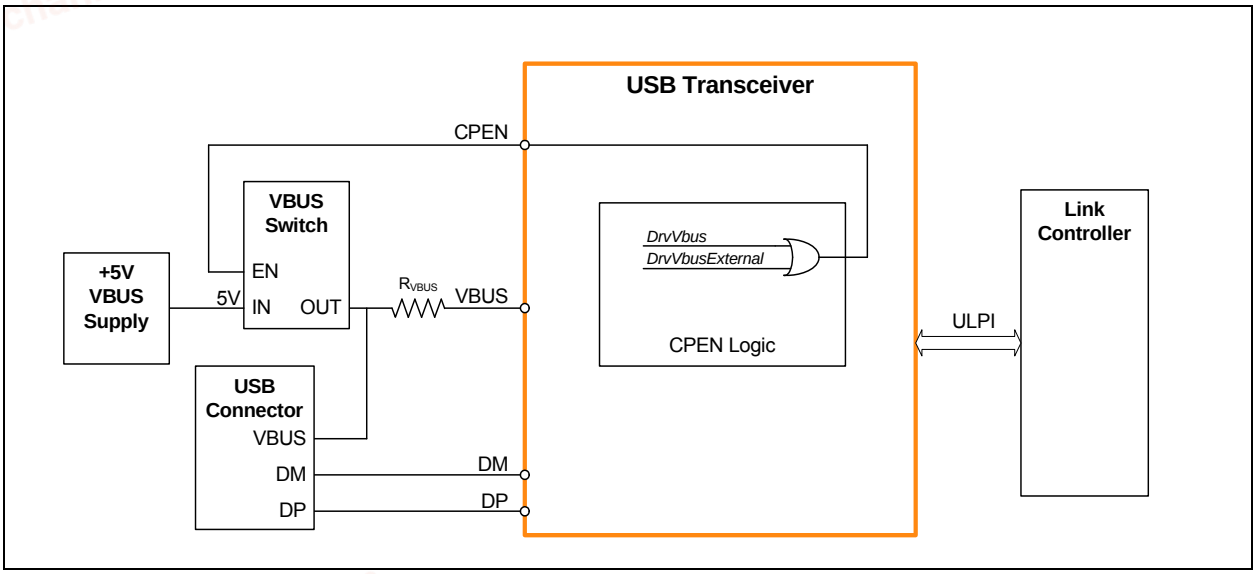

5.7 USB UART Support

The USB3320 provides support for the USB UART interface as detailed in the ULPI specification and the former CEA-936A specification. The USB3320 can be placed in UART Mode using the method described in Section 6.5, and the regulator output will automatically switch to the value configured by the *UART RegOutput bits in the* USB IO & Power Management register. While in UART mode, the Linestate signals cannot be monitored on the DATA[0] and DATA[1] pins.

5.8 USB Charger Detection Support

To support the detection and identification of different types of USB chargers the USB3320 provides integrated pull-up resistors, R_{CD}, on both DP and DM. These pull-up resistors along with the single ended receivers can be used to help determine the type of USB charger attached. Reference information on implementing charger detection is provided in Microchip Application Note AN 19.7 - Battery Charging Using Microchip USB Transceivers.

TABLE 5-8: USB WEAK PULL-UP ENABLE

RESETB	DP Pullup Enable	DM Pullup Enable
0	0	0
1	*ChargerPullupEnableDP*	*ChargerPullupEnableDM*

Note: *ChargerPullupEnableDP* and *ChargerPullupEnableDM* are enabled in the USB IO & Power Management register.

5.9 USB Audio Support

Note: The USB3320 supports “USB Digital Audio” through the USB protocol in ULPI and USB Serial modes described in Section 6.0.

The USB3320 provides two low resistance analog switches that allow analog audio to be multiplexed over the DP and DM terminals of the USB connector. The audio switches are shown in Figure 5.1. The electrical characteristics of the USB Audio Switches are provided in Table 4-8.

chanhvinh.com

During normal USB operation the switches are off. When USB Audio is desired the switches can be turned “on” by enabling the *SpkLeftEn, SpkRightEn,* or *MicEn* bits in the Carkit Control register as described in Section 6.5.2. These bits are disabled by default. The USB Audio Switches can also be enabled by asserting the **RESETB** pin or removing the voltage at **VDD18** as shown in Table 5-9. While using the USB switches, **VDD18** is not required, but 3.3V must be present at **VDD33**. The integrated 3.3V LDO regulator may be used to generate **VDD33** from power applied at the VBAT pin.

TABLE 5-9: USB AUDIO SWITCH ENABLE

RESETB	VDD18	DP Switch Enable	DM Switch Enable
X	0	1	1
0	1	1	1
1	1	*SpkLeftEn*	*SpkRightEn* or *MicEn*

Note: *SpkLeftEn, SpkRightEn,* and *MicEn* are enabled in the Carkit Control register.

In addition to USB Audio support the switches can also be used to multiplexed a second FS USB transceiver to the USB connector. The signal quality will be degraded slightly due to the “on” resistance of the switches. The USB3320 single-ended receivers described in Section 5.2.1 are disabled when either USB Audio switch is enabled.

The USB3320 does not provide the DC bias for the audio signals. The **SPK_R** and **SPK_L** pins should be biased to 1.65V when audio signals are routed through the USB3320. This DC bias is necessary to prevent the audio signal from swinging below ground and being clipped by ESD Diodes.

When the system is not using the USB Audio switches, the **SPK_R** and **SPK_L** pins should not be connected.

5.10 Reference Frequency Selection

The USB3320 is configured for the desired reference frequency by the **REFSEL[2]**, **REFSEL[1]** and **REFSEL[0]** pins. If a pin is connected to **VDDIO,** the value of “1” is assigned. Connect the pin to ground to assign a “0.” When using the ULPI Input Clock Mode (60MHz REFCLK Mode), the reference frequency is always fixed at 60 MHz. Eight reference clock frequencies are available as described in Table 5-10.

TABLE 5-10: CONFIGURATION TO SELECT REFERENCE CLOCK FREQUENCY

Configuration Pins			Description
REFSEL[2]	REFSEL[1]	REFSEL[0]	Reference Frequency
0	0	0	52 MHz
0	0	1	38.4 MHz
0	1	0	12 MHz
0	1	1	27 MHz
1	0	0	13 MHz
1	0	1	19.2 MHz
1	1	0	26 MHz
1	1	1	24 MHz

© 2014 Microchip Technology Inc.

chanhvinh.com

6.0 ULPI OPERATION

6.1 Overview

The USB3320 uses the industry standard ULPI digital interface to facilitate communication between the USB Transceiver (PHY) and Link (device controller). The ULPI interface is designed to reduce the number of pins required to connect a discrete USB Transceiver to an ASIC or digital controller. For example, a full UTMI+ Level 3 OTG interface requires 54 signals while a ULPI interface requires only 12 signals.

The ULPI interface is documented completely in the “UTMI+ Low Pin Interface (ULPI) Specification Revision 1.1”. The following sections describe the operating modes of the USB3320 digital interface.

Figure 6-1 illustrates the block diagram of the ULPI digital functions. It should be noted that this USB3320 does not use a “ULPI wrapper” around a UTMI+ PHY core as the ULPI specification implies.

FIGURE 6-1: ULPI DIGITAL BLOCK DIAGRAM

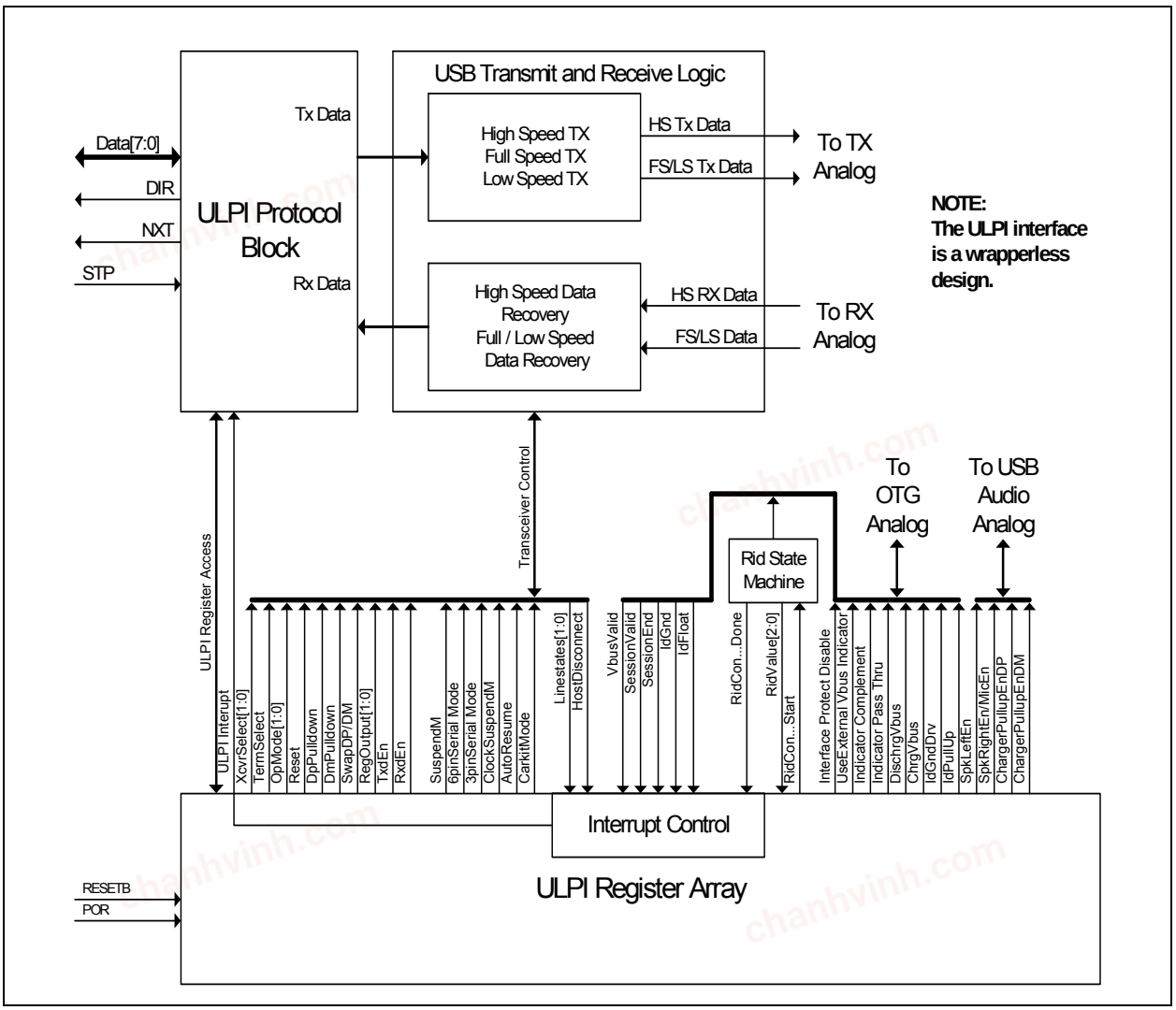

The advantage of a “wrapper less” architecture is that the USB3320 has a lower USB latency than a design which must first register signals into the PHY’s wrapper before the transfer to the PHY core. A low latency PHY allows a Link to use a wrapper around a UTMI Link and still make the required USB turn-around timing given in the USB 2.0 specification.

chanhvinh.com

RxEndDelay maximum allowed by the UTMI+/ULPI for 8-bit data is 63 high speed clocks. USB3320 uses a low latency high speed receiver path to lower the RxEndDelay to 43 high speed clocks. This low latency design gives the Link more cycles to make decisions and reduces the Link complexity. This is the result of the “wrapper less” architecture of the USB3320. This low RxEndDelay should allow legacy UTMI Links to use a “wrapper” to convert the UTMI+ interface to a ULPI interface.

In Figure 6-1, a single ULPI Protocol Block decodes the ULPI 8-bit bi-directional bus when the Link addresses the PHY. The Link must use the **DIR** output to determine direction of the ULPI data bus. The USB3320 is the “bus arbitrator”. The ULPI Protocol Block will route data/commands to the transmitter or the ULPI register array.

6.1.1 ULPI INTERFACE SIGNALS

The UTIM+ Low Pin Interface (ULPI) uses twelve pins to connect a full OTG Host / Device USB Transceiver to an SOC. A reduction of external pins on the transceiver is accomplished by realizing that many of the relatively static configuration pins (xcvrselect[1:0], termselect, opmode[1:0], and DpPullDown DmPulldown to list a few,) can be implemented by having an internal static register array.

An 8-bit bi-directional data bus clocked at 60MHz allows the Link to access this internal register array and transfer USB packets to and from the transceiver. The remaining 3 pins function to control the data flow and arbitrate the data bus.

Direction of the 8-bit data bus is controlled by the **DIR** output from the transceiver. Another output, **NXT**, is used to control data flow into and out of the device. Finally, **STP**, which is in input to the transceiver, terminates transfers and is used to start up and resume from Low Power Mode.

The twelve signals are described below in Table 6-1.

TABLE 6-1: ULPI INTERFACE SIGNALS

Signal	Direction	Description
CLK	I/O	60MHz ULPI clock. All ULPI signals are driven synchronous to the rising edge of this clock. This clock can be either driven by the transceiver or the Link as described in Section 5.4.1
DATA[7:0]	I/O	8-bit bi-directional data bus. Bus ownership is determined by DIR. The Link and transceiver initiate data transfers by driving a non-zero pattern onto the data bus. ULPI defines interface timing for a single-edge data transfers with respect to rising edge of the ULPI clock.
DIR	OUT	Controls the direction of the data bus. When the transceiver has data to transfer to the Link, it drives **DIR** high to take ownership of the bus. When the transceiver has no data to transfer it drives **DIR** low and monitors the bus for commands from the Link. The transceiver will pull **DIR** high whenever the interface cannot accept data from the Link, such as during PLL start-up.
STP	IN	The Link asserts **STP** for one clock cycle to stop the data stream currently on the bus. If the Link is sending data to the transceiver, **STP** indicates the last byte of data was on the bus in the previous cycle.
NXT	OUT	The transceiver asserts **NXT** to throttle the data. When the Link is sending data to the transceiver, **NXT** indicates when the current byte has been accepted by the transceiver. The Link places the next byte on the data bus in the following clock cycle.

USB3320 implements a Single Data Rate (SDR) ULPI interface with all data transfers happening on the rising edge of the 60MHz ULPI Clock while operating in Synchronous Mode. The direction of the data bus is determined by the state of **DIR**. When **DIR** is high, the transceiver is driving **DATA[7:0]**. When **DIR** is low, the Link is driving **DATA[7:0]**.

Each time DIR changes, a “turn-around” cycle occurs where neither the Link nor transceiver drive the data bus for one clock cycle. During the “turn–around“cycle, the state of **DATA[7:0]** is unknown and the transceiver will not read the data bus.

Because USB uses a bit-stuffing encoding, some means of allowing the transceiver to throttle the USB transmit data is needed. The ULPI signal **NXT** is used to request the next byte to be placed on the data bus by the Link layer.

The ULPI interface supports the two basic modes of operation: Synchronous Mode and asynchronous modes that include Low Power Mode, Serial Modes, and Carkit Mode. In Synchronous Mode, all signals change synchronously with the 60MHz ULPI clock. In asynchronous modes the clock is off and the ULPI bus is redefined to bring out the signals required for that particular mode of operations. The description of synchronous Mode is described in the following sections while the descriptions of the asynchronous modes are described in Section 6.3, Section 6.4, and Section 6.5.

© 2014 Microchip Technology Inc.

chanhvinh.com

6.1.2 ULPI INTERFACE TIMING IN SYNCHRONOUS MODE

The control and data timing relationships are given in Figure 6-2 and Table 4-3. All timing is relative to the rising clock edge of the 60MHz ULPI Clock.

FIGURE 6-2: ULPI SINGLE DATA RATE TIMING DIAGRAM IN SYNCHRONOUS MODE

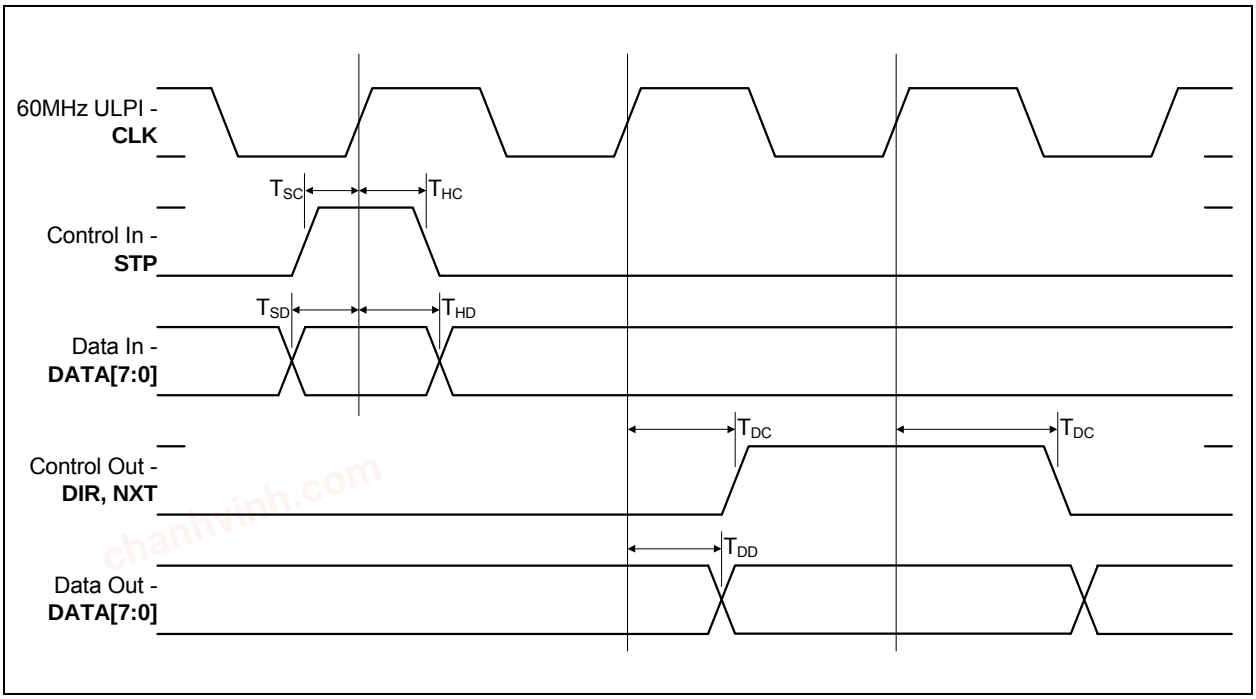

6.2 ULPI Register Access

A command from the Link begins a ULPI transfer from the Link to the USB3320. Before reading a ULPI register, the Link must wait until DIR is low, and then send a Transmit Command Byte (TXD CMD) byte. The TXD CMD byte informs the USB3320 of the type of data being sent. The TXD CMD is followed by a data transfer to or from the USB3320. Table 6-2 gives the TXD command byte (TXD CMD) encoding for the USB3320. The upper two bits of the TX CMD instruct the transceiver as to what type of packet the Link is transmitting. The ULPI registers retain their contents when the transceiver is in Low Power Mode, Full Speed/Low Speed Serial Mode, or Carkit Mode.

TABLE 6-2: ULPI TXD CMD BYTE ENCODING

Command Name	CMD Bits[7:6]	CMD Bits[5:0]	Command Description
Idle	00b	000000b	ULPI Idle
Transmit	01b	000000b	USB Transmit Packet with No Packet Identifier (NOPID)
		00XXXXb	USB Transmit Packet Identifier (PID) where DATA[3:0] is equal to the 4-bit PID. $P_3P_2P_1P_0$ where P_3 is the MSB.
Register Write	10b	XXXXXXb	Immediate Register Write Command where: **DATA[5:0]** = 6-bit register address
		101111b	Extended Register Write Command where the 8-bit register address is available on the next cycle.
Register Read	11b	XXXXXXb	Immediate Register Read Command where: **DATA[5:0]** = 6-bit register address
		101111b	Extended Register Read Command where the 8-bit register address is available on the next cycle.

chanhvinh.com

6.2.1 ULPI REGISTER WRITE

A ULPI register write operation is given in Figure 6-3. The TXD command with a register write **DATA[7:6]** = 10b is driven by the Link at T0. The register address is encoded into **DATA[5:0]** of the TXD CMD byte.

FIGURE 6-3: ULPI REGISTER WRITE IN SYNCHRONOUS MODE

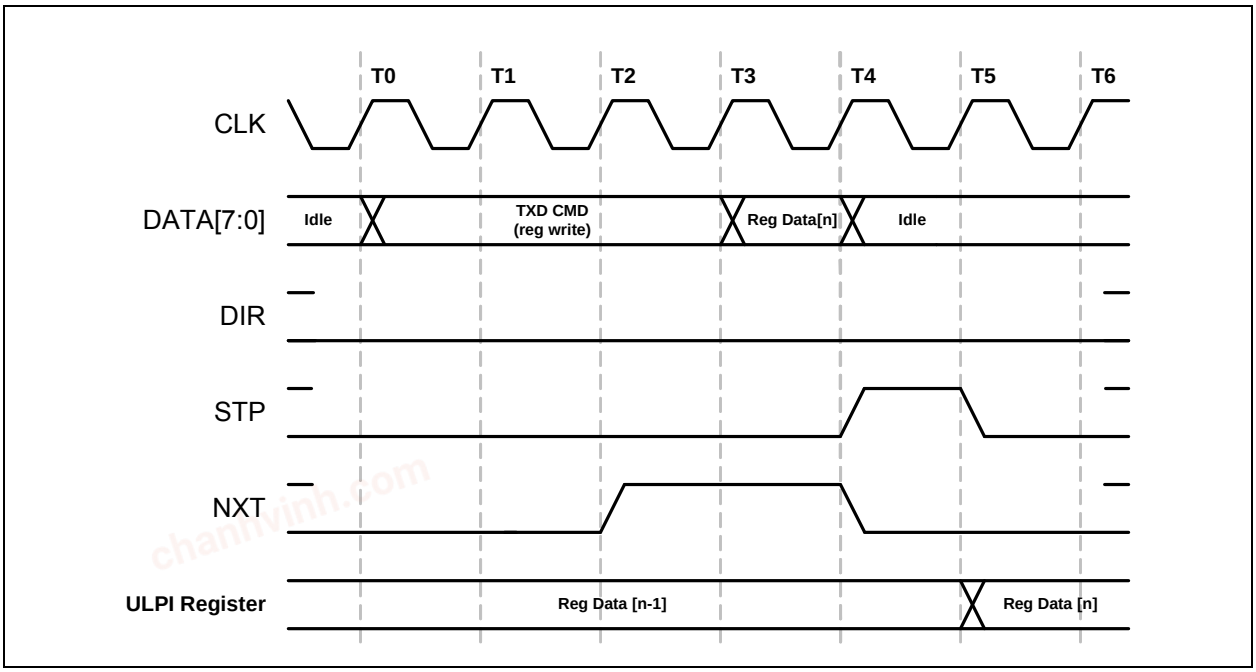

To write a register, the Link will wait until **DIR** is low, and at T0, drive the TXD CMD on the data bus. At T2 the transceiver will drive **NXT** high. On the next rising clock edge, T3, the Link will write the register data. At T4, the transceiver will accept the register data and drive **NXT** low. The Link will drive an Idle on the bus and drive **STP** high to signal the end of the data packet. Finally, at T5, the transceiver will latch the data into the register and the Link will pull **STP** low.

NXT is used to control when the Link drives the register data on the bus. **DIR** is low throughout this transaction since the transceiver is receiving data from the Link. **STP** is used to end the transaction and data is registered after the de-assertion of **STP**. After the write operation completes, the Link must drive a ULPI Idle (00h) on the data bus or the USB3320 may decode the bus value as a ULPI command.

A ULPI extended register write operation is shown in Figure 6-4. To write an extended register, the Link will wait until **DIR** is low, and at T0, drive the TXD CMD on the data bus. At T2 the transceiver will drive **NXT** high. On the next clock T3 the Link will drive the extended address. On the next rising clock edge, T4, the Link will write the register data. At T5, the transceiver will accept the register data and drive **NXT** low. The Link will drive an Idle on the bus and drive **STP** high to signal the end of the data packet. Finally, at T5, the transceiver will latch the data into the register. The Link will pull **STP** low.

© 2014 Microchip Technology Inc.

chanhvinh.com

FIGURE 6-4: ULPI EXTENDED REGISTER WRITE IN SYNCHRONOUS MODE

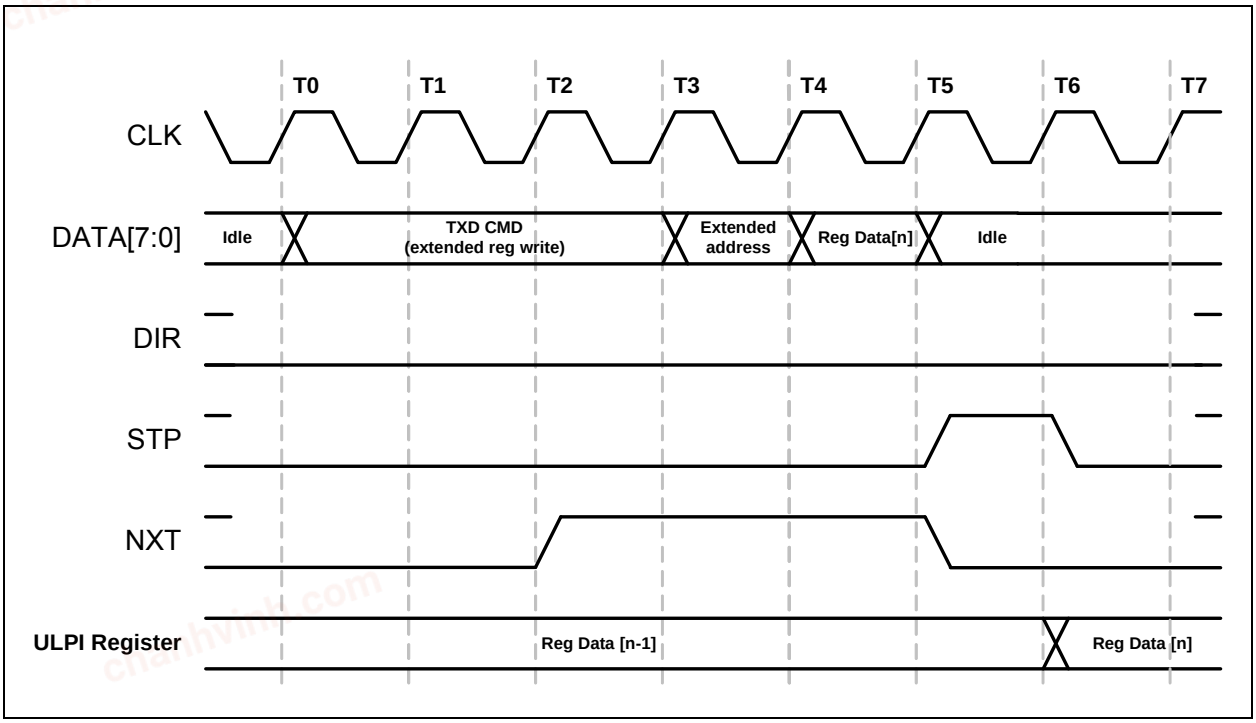

6.2.2 ULPI REGISTER READ

A ULPI register read operation is given in Figure 6-5. The Link drives a TXD CMD byte with **DATA[7:6]** = 11h for a register read. **DATA[5:0]** of the ULPI TXD command bye contain the register address.

FIGURE 6-5: ULPI REGISTER READ IN SYNCHRONOUS MODE

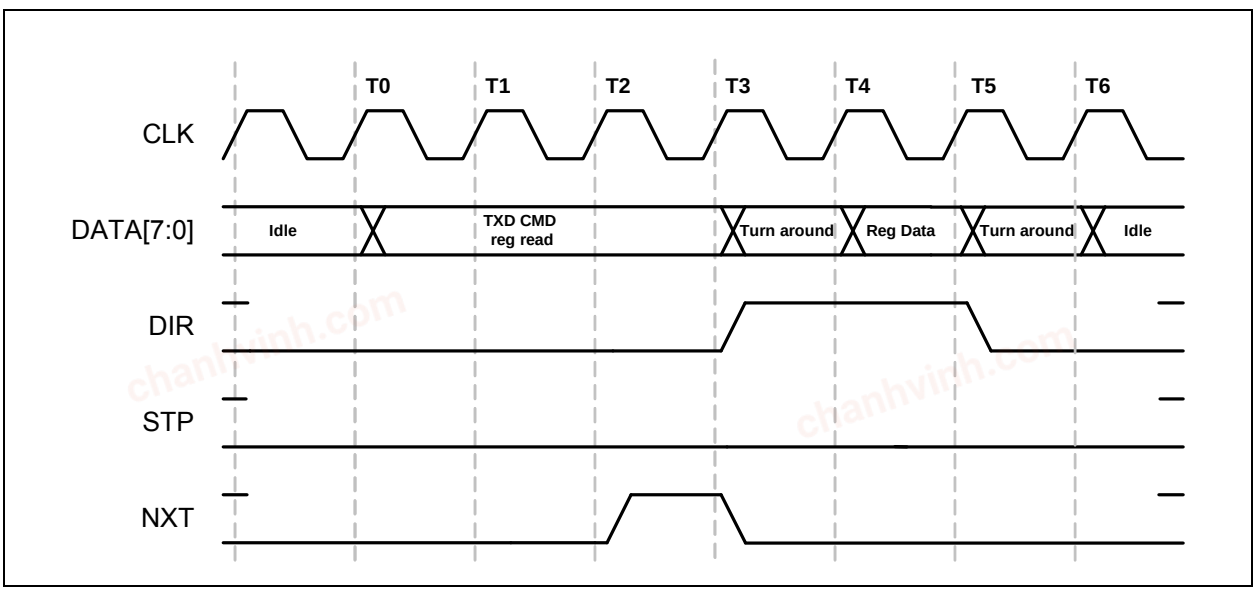

chanhvinh.com

At T0, the Link will place the TXD CMD on the data bus. At T2, the transceiver will bring **NXT** high, signaling the Link it is ready to accept the data transfer. At T3, the transceiver reads the TXD CMD, determines it is a register read, and asserts **DIR** to gain control of the bus. The transceiver will also de-assert **NXT**. At T4, the bus ownership has transferred back to the transceiver and the transceiver drives the requested register onto the data bus. At T5, the Link will read the data bus and the transceiver will drop **DIR** low returning control of the bus back to the Link. After the turn around cycle, the Link must drive a ULPI Idle command at T6.

A ULPI extended register read operation is shown in Figure 6-6.To read an extended register, the Link writes the TX CMD with the address set to 2Fh. At T2, the transceiver will assert **NXT**, signaling the Link it is ready to accept the extended address. At T3, the Link places the extended register address on the bus. At T4, the transceiver reads the extended address, and asserts **DIR** to gain control of the bus. The transceiver will also de-assert **NXT**. At T5, the bus ownership has transferred back to the transceiver and the transceiver drives the requested register onto the data bus. At T6, the Link will read the data bus and the transceiver will de-assert **DIR** returning control of the bus back to the Link. After the turn around cycle, the Link must drive a ULPI Idle command at T6.

FIGURE 6-6: ULPI EXTENDED REGISTER READ IN SYNCHRONOUS MODE

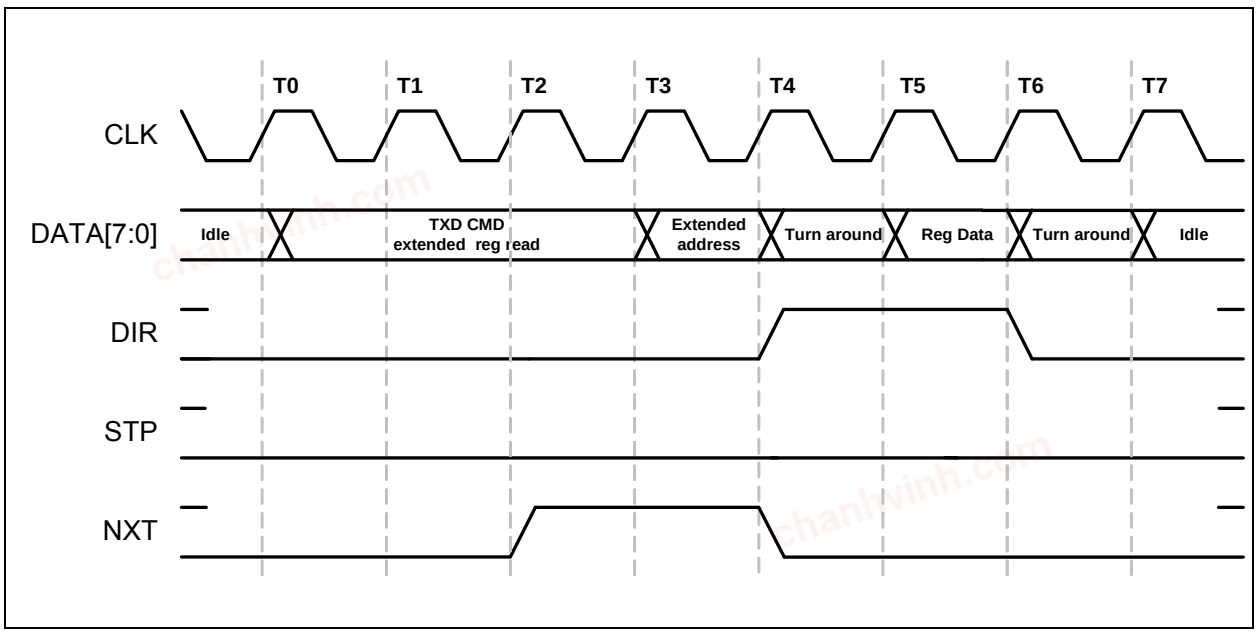

6.2.3 ULPI RXCMD

The ULPI Link needs information which was provided by the following pins in a UTMI implementation: linestate[1:0], rxactive, rxvalid and rxerror. When implementing the OTG functions, the **VBUS** and **ID** pin states must also be transferred to the Link.

ULPI defines a Receive Command Byte (RXCMD) that contains this information. The Encoding of the RXCMD byte is given in the Table 6-3.

Transfer of the RXCMD byte occurs in Synchronous Mode when the transceiver has control of the bus. The ULPI Protocol Block shown in Figure 6-1 determines when to send an RXCMD.

A RXCMD can occur:

- When a linestate change occurs.
- When VBUS or ID comparators change state.
- During a USB receive when **NXT** is low.
- After the USB3320 deasserts **DIR** and **STP** is low during start-up
- After the USB3320 exits Low Power Mode, Serial Modes, or Carkit Mode after detecting that the Link has de-asserted **STP**, and **DIR** is low.

When a USB Receive is occurring, RXCMD's are sent whenever **NXT** = 0 and **DIR** = 1. During a USB Transmit, the RXCMD's are returned to the Link after **STP** is asserted.

© 2014 Microchip Technology Inc.

chanhvinh.com

If an RXCMD event occurs during a USB transmit, the RXCMD is blocked until **STP** de-asserts at the end of the transmit. The RXCMD contains the status that is current at the time the RXCMD is sent.

TABLE 6-3: ULPI RX CMD ENCODING

Data[7:0]	Name	Description and Value				
[1:0]	Linestate	UTMI Linestate Signals Note 6-1				
[3:2]	Encoded VBUS State	**ENCODED VBUS VOLTAGE STATES**				
		VALUE	**VBUS VOLTAGE**	**SESSEND**	**SESSVLD**	**$VBUSVLD_2$**
		00	$V_{VBUS} < V_{SESS_END}$	1	0	0
		01	$V_{SESS_END} < V_{VBUS} < V_{SESS_VLD}$	0	0	0
		10	$V_{SESS_VLD} < V_{VBUS} < V_{VBUS_VLD}$	X	1	0
		11	$V_{VBUS_VLD} < V_{VBUS}$	X	X	1
[5:4]	Rx Event Encoding	**ENCODED UTMI EVENT SIGNALS**				
		VALUE	**RXACTIVE**	**RXERROR**	**HOSTDISCONNECT**	
		00	0	0	0	
		01	1	0	0	
		11	1	1	0	
		10	X	X	1	
[6]	State of **ID** pin	Set to the logic state of the **ID** pin. A logic low indicates an A device. A logic high indicates a B device.				
[7]	alt_int	Asserted when a non-USB interrupt occurs. This bit is set when an unmasked event occurs on any bit in the Carkit Interrupt Latch register. The Link must read the Carkit Interrupt Latch register to determine the source of the interrupt. Section 5.6.1.3 describes how a change on the **ID** pin can generate an interrupt. Section 6.6 describes how an interrupt can be generated when the *RidConversionDone* bit is set.				

Note 1: An 'X' is a do not care and can be either a logic 0 or 1.

2: The value of VbusValid is defined in Table 5-6.

Note 6-1 LineState: These bits in the RXCMD byte reflect the current state of the Full-Speed single ended receivers. LineState[0] directly reflects the current state of **DP**. LineState[1] directly reflects the current state of **DM**. When **DP=DM**=0 this is called "Single Ended Zero" (SE0). When **DP=DM**=1, this is called "Single Ended One" (SE1).

6.2.4 USB3320 TRANSMITTER

The USB3320 ULPI transmitter fully supports HS, FS, and LS transmit operations. Figure 6-1 shows the high speed, full speed, and low speed transmitter block controlled by ULPI Protocol Block. Encoding of the USB packet follows the bit-stuffing and NRZI outlined in the USB 2.0 specification. Many of these functions are re-used between the HS and FS/LS transmitters. When using the USB3320, Table 5-1 should always be used as a guideline on how to configure for various modes of operation. The transmitter decodes the inputs of *XcvrSelect[1:0]*, *TermSelect*, *OpMode[1:0]*, *DpPulldown,* and *DmPulldown* to determine what operation is expected. Users must strictly adhere to the modes of operation given in Table 5-1.

Several important functions for a device and host are designed into the transmitter blocks.

The USB3320 transmitter will transmit a 32-bit long high speed sync before every high speed packet. In full and low speed modes a 8-bit sync is transmitted.

When the device or host needs to chirp for high speed port negotiation, the *OpMode* = 10b setting in the Function Control register will turn off the bit-stuffing and NRZI encoding in the transmitter. At the end of a chirp, the USB3320 *OpMode* bits should be changed only after the RXCMD linestate encoding indicates that the transmitter has completed transmitting. Should the opmode be switched to normal bit-stuffing and NRZI encoding before the transmit pipeline is empty, the remaining data in the pipeline may be transmitted in an bit-stuff encoding format.

Please refer to the ULPI specification for a detailed discussion of USB reset and HS chirp.

© 2014 Microchip Technology Inc.

chanhvinh.com

6.2.4.1 High Speed Long EOP

When operating as a Hi-Speed host, the USB3320 will automatically generate a 40 bit long End of Packet (EOP) after a SOF PID (A5h). The USB3320 determines when to send the 40-bit long EOP by decoding the ULPI TXD CMD bits [3:0] for the SOF. The 40-bit long EOP is only transmitted when the *DpPulldown* and *DmPulldown* bits in the OTG Control register are asserted. The Hi-Speed 40-bit long EOP is used to detect a disconnect in high speed mode.

In device mode, the USB3320 will not send a long EOP after a SOF PID.

6.2.4.2 Low Speed Keep-Alive

Low speed keep alive is supported by the USB3320. When in Low speed (*XcvrSelect* = 10b in the Function Control register), the USB3320 will send out two Low speed bit times of SE0 when a SOF PID is received.

6.2.4.3 UTMI+ Level 3

Pre-amble is supported for UTMI+ Level 3 compatibility. When *XcvrSelect* = 11b in the Function Control register in host mode (*DpPulldown* and *DmPulldown* both asserted), the USB3320 will pre-pend a full speed pre-amble before the low speed packet. Full speed rise and fall times are used in this mode. The pre-amble consists of the following: Full speed sync, the encoded pre-PID (C3h) and then full speed idle (DP=1 and DM = 0). A low speed packet follows with a sync, data and a LS EOP.

The USB3320 will only support UTMI+ Level 3 as a host. The USB3320 does not support UTMI+ Level 3 as a peripheral. A UTMI+ Level 3 peripheral is an upstream hub port. The USB3320 will not decode a pre-amble packet intended for a LS device when the USB3320 is configured as the upstream port of a FS hub, *XcvrSelect* = 11b, *DpPulldown* = 0b, *DmPulldown* =0b.

6.2.4.4 Host Resume K

Resume K generation is supported by the USB3320. When the USB3320 exits the suspended (Low Power Mode), the USB3320, when operating as a host, will transmit a K on DP/DM. The transmitters will end the K with SE0 for two Low Speed bit times. If the USB3320 was operating in high speed mode before the suspend, the host must change to high speed mode before the SE0 ends. SE0 is two low speed bit times which is about 1.2 us. For more details please see sections 7.1.77 and 7.9 of the USB Specification.

In device mode, the resume K will not append an SE0, but release the bus to the correct idle state, depending upon the operational mode as shown in Table 5-1.

The ULPI specification includes a detailed discussion of the resume sequence and the order of operations required. To support Host start-up of less than 1mS the USB3320 implements the ULPI *AutoResume* bit in the Interface Control register. The default *AutoResume* state is 0 and this bit should be enabled for Host applications.

6.2.4.5 No SYNC and EOP Generation (*OpMode* = 11)

UTMI+ defines O*pMode* = 11 where no sync and EOP generation occurs in Hi-Speed operation. This is an option to the ULPI specification and not implemented in the USB3320.

6.2.4.6 Typical USB Transmit with ULPI

Figure 6-7 shows a typical USB transmit sequence. A transmit sequence starts by the Link sending a TXD CMD where **DATA[7:6]** = 01b, **DATA[5:4]** = 00b, and **Data[3:0]** = PID. The TX CMD with the PID is followed by transmit data.

© 2014 Microchip Technology Inc.

chanhvinh.com

FIGURE 6-7: ULPI TRANSMIT IN SYNCHRONOUS MODE

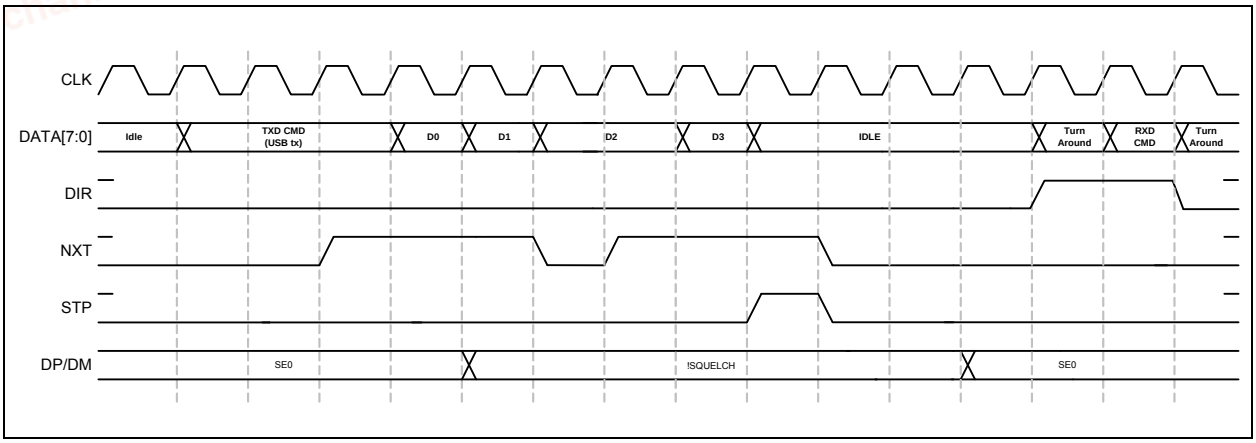

During transmit the transceiver will use **NXT** to control the rate of data flow into the transceiver. If the USB3320 pipeline is full or bit-stuffing causes the data pipeline to overfill **NXT** is de-asserted and the Link will hold the value on Data until **NXT** is asserted. The USB Transmit ends when the Link asserts **STP** while **NXT** is asserted.

Note:	The Link cannot assert **STP** with **NXT** de-asserted since the USB3320 is expecting to fetch another byte from the Link.

After the USB3320 completes transmitting, the **DP** and **DM** lines return to idle and a RXCMD is returned to the Link so the inter-packet timers may be updated by linestate.

While operating in Full Speed or Low Speed, an End-of-Packet (EOP) is defined as SE0 for approximately two bit times, followed by J for one bit time. The transceiver drives a J state for one bit time following the SE0 to complete the EOP. The Link must wait for one bit time following line state indication of the SE0 to J transition to allow the transceiver to complete the one bit time J state. All bit times are relative to the speed of transmission.

In the case of Full Speed or Low Speed, after **STP** is asserted each FS/LS bit transition will generate a RXCMD since the bit times are relatively slow.

6.2.5 USB RECEIVER

The USB3320 ULPI receiver fully supports HS, FS, and LS transmit operations. In all three modes the receiver detects the start of packet and synchronizes to the incoming data packet. In the ULPI protocol, a received packet has the priority and will immediately follow register reads and RXCMD transfers. Figure 6-8 shows a basic USB packet received by the USB3320 over the ULPI interface.

chanhvinh.com

FIGURE 6-8: ULPI RECEIVE IN SYNCHRONOUS MODE

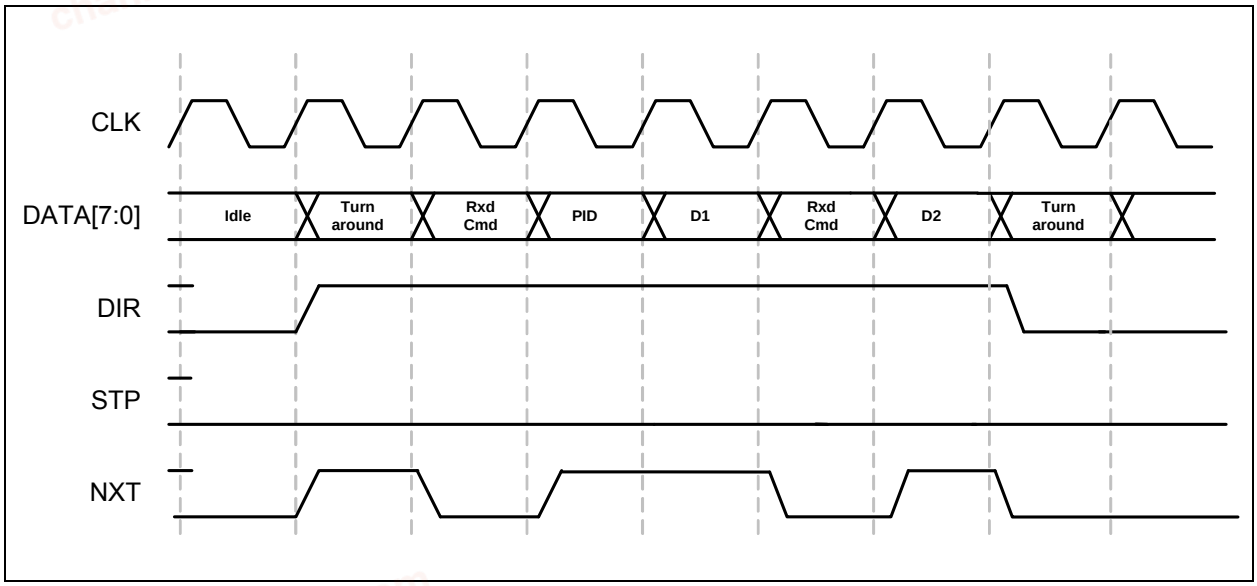

In Figure 6-8 the transceiver asserts **DIR** to take control of the data bus from the Link. The assertion of **DIR** and **NXT** in the same cycle contains additional information that Rxactive has been asserted. When **NXT** is de-asserted and **DIR** is asserted, the RXCMD data is transferred to the Link. After the last byte of the USB receive packet is transferred to the transceiver, the linestate will return to idle.

The ULPI full speed receiver operates according to the UTMI / ULPI specification. In the full speed case, the **NXT** signal will assert only when the Data bus has a valid received data byte. When **NXT** is low with **DIR** high, the RXCMD is driven on the data bus.

In full speed, the USB3320 will not issue a Rxactive de-assertion in the RXCMD until the DP/DM linestate transitions to idle. This prevents the Link from violating the two full speed bit times minimum turn around time.

6.2.5.1 Disconnect Detection

A High Speed host must detect a disconnect by sampling the transmitter outputs during the long EOP transmitted during a SOF packet. The USB3320 only looks for a high speed disconnect during the long EOP where the period is long enough for the disconnect reflection to return to the host transceiver. When a high speed disconnect occurs, the USB3320 will return a RXCMD and set the host disconnect bit in the USB Interrupt Status register.

When in FS or LS modes, the Link is expected to handle all disconnect detection.

6.3 Low Power Mode

Low Power Mode is a power down state to save current when the USB session is suspended. The Link controls when the transceiver is placed into or out of Low Power Mode. In Low Power Mode all of the circuits are powered down except the interface pins, full speed receiver, VBUS comparators, and IdGnd comparator.

Before entering Low Power Mode, the USB3320 must be configured to set the desired state of the USB transceiver. The *XcvrSelect[1:0]*, *TermSelect* and *OpMode[1:0]* bits in the Function Control register, and the *DpPulldown* and *DmPulldown* bits in the OTG Control register control the configuration as shown in Table 5-1. The **DP** and **DM** pins are configured to a high impedance state by configuring *OpMode[1:0]* = 01. Pull-down resistors with a value of approximately 2MΩ are present on the **DP** and **DM** pins to avoid false linestate indications that could result if the pins were allowed to float.

6.3.1 ENTERING LOW POWER/SUSPEND MODE

To enter Low Power Mode, the Link will write a 0 or clear the *SuspendM* bit in the Function Control register. After this write is complete, the transceiver will assert **DIR** high and after a minimum of five rising edges of **CLKOUT**, drive the clock low. After the clock is stopped, the transceiver will enter a low power state to conserve current. Placing the transceiver in Suspend Mode is not related to USB Suspend. To clarify this point, USB Suspend is initiated when a USB host

© 2014 Microchip Technology Inc.

chanhvinh.com

stops data transmissions and enters Full-Speed mode with 15KΩ pull-down resistors on **DP** and **DM**. The suspended device goes to Full-Speed mode with a pull-up on **DP**. Both the host and device remain in this state until one of them drives **DM** high (this is called a resume).

FIGURE 6-9: ENTERING LOW POWER MODE FROM SYNCHRONOUS MODE

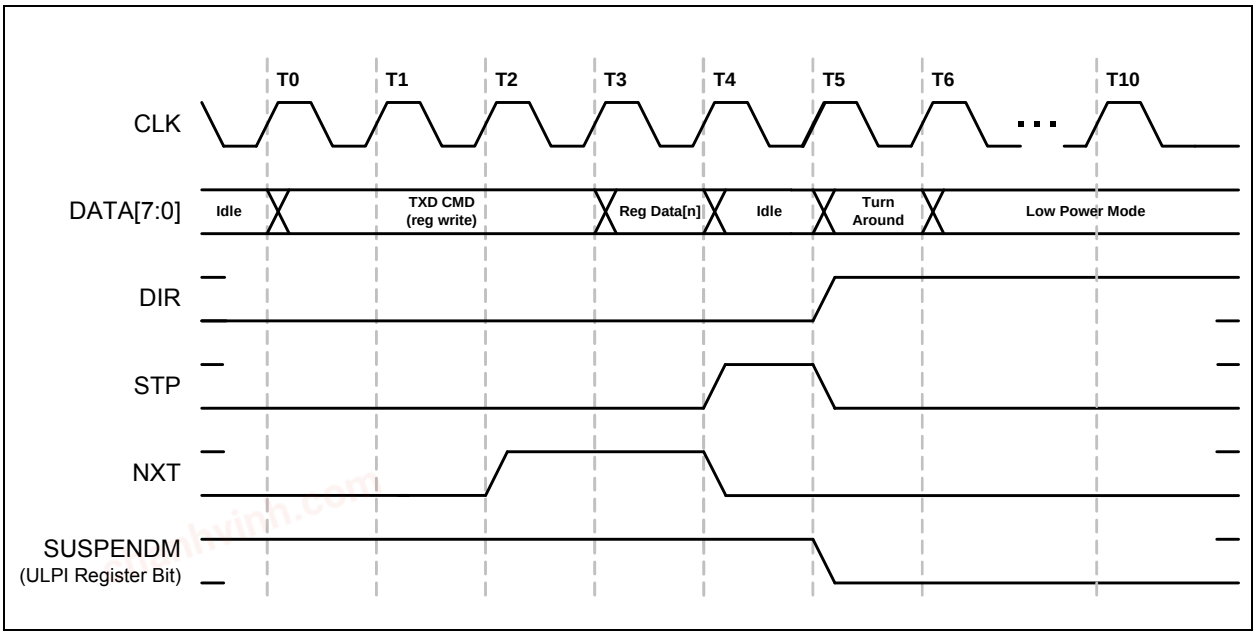

While in Low Power Mode, the Data interface is redefined so that the Link can monitor Linestate and the VBUS voltage. In Low Power Mode **DATA[3:0]** are redefined as shown in Table 6-4. Linestate[1:0] is the combinational output of the Single-Ended Receivers. The “int” or interrupt signal indicates an unmasked interrupt has occurred. When an unmasked interrupt or linestate change has occurred, the Link is notified and can determine if it should wake-up the transceiver.

TABLE 6-4: INTERFACE SIGNAL MAPPING DURING LOW POWER MODE

Signal	Maps to	Direction	Description
linestate[0]	**DATA[0]**	OUT	Combinatorial LineState[0] driven directly by the Full-Speed single ended receiver. Note 6-2
linestate[1]	**DATA[1]**	OUT	Combinatorial LineState[1] driven directly by the Full-Speed single ended receiver. Note 6-2
reserved	**DATA[2]**	OUT	Driven Low
int	**DATA[3]**	OUT	Active high interrupt indication. Must be asserted whenever any unmasked interrupt occurs.
reserved	**DATA[7:4]**	OUT	Driven Low

Note 6-2 LineState: These signals reflect the current state of the Full-Speed single ended receivers. LineState[0] directly reflects the current state of **DP**. LineState[1] directly reflects the current state of **DM**. When **DP=DM**=0 this is called "Single Ended Zero" (SE0). When **DP=DM**=1, this is called "Single Ended One" (SE1).

An unmasked interrupt can be caused by the following comparators changing state: VbusVld, SessVld, SessEnd, and IdGnd. If any of these signals change state during Low Power Mode and the bits are enabled in either the USB Interrupt Enable Rising or USB Interrupt Enable Falling registers, **DATA[3]** will assert. During Low Power Mode, the VbusVld and SessEnd comparators can have their interrupts masked to lower the suspend current as described in Section 6.3.4.

While in Low Power Mode, the Data bus is driven asynchronously because all of the transceiver clocks are stopped during Low Power Mode.

chanhvinh.com

6.3.2 EXITING LOW POWER MODE

To exit Low Power Mode, the Link will assert **STP**. Upon the assertion of **STP**, the USB3320 will begin its start-up procedure. After the transceiver start-up is complete, the transceiver will start the clock on **CLKOUT** and de-assert **DIR**. After **DIR** has been de-asserted, the Link can de-assert **STP** when ready and start operating in Synchronous Mode. The transceiver will automatically set the *SuspendM* bit to a 1 in the Function Control register.

FIGURE 6-10: EXITING LOW POWER MODE

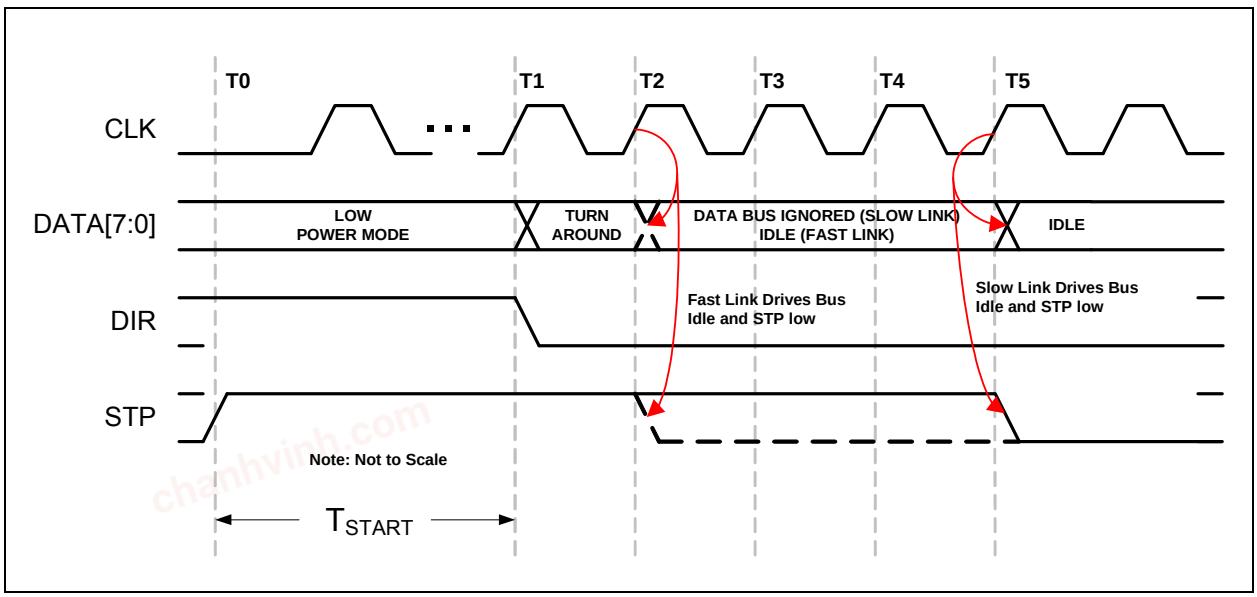

The value for T_{START} is given in Table 4-2.

Should the Link de-assert **STP** before **DIR** is de-asserted, the USB3320 will detect this as a false resume request and return to Low Power Mode. This is detailed in section 3.9.4 of the ULPI 1.1 specification.

6.3.3 INTERFACE PROTECTION

ULPI protocol assumes that both the Link and transceiver will keep the ULPI data bus driven by either the Link when **DIR** is low or the transceiver when **DIR** is high. The only exception is when **DIR** has changed state and a turn around cycle occurs for 1 clock period.

In the design of a USB system, there can be cases where the Link may not be driving the ULPI bus to a known state while **DIR** is low. Two examples where this can happen is because of a slow Link start-up or a hardware reset.

6.3.3.1 Start up Protection

Upon start-up, when the transceiver de-asserts **DIR**, the Link must be ready to receive commands and drive Idle on the data bus. If the Link is not ready to receive commands or drive Idle, it must assert **STP** before **DIR** is de-asserted. The Link can then de-assert **STP** when it has completed its start-up. If the Link doesn't assert **STP** before it can receive commands, the **transceiver** may interpret the data bus state as a TX CMD and transmit invalid data onto the **USB** bus, or make invalid register writes.

When the USB3320 sends a RXCMD the Link is required to drive the data bus back to idle at the end of the turn around cycle. If the Link does not drive the databus to idle the USB3320 may take the information on the data bus as a TXCMD and transmit data on **DP** and **DM** until the Link asserts stop. If the **ID** pin is floated the last RXCMD from the USB3320 will remain on the bus after **DIR** is de-asserted and the USB3320 will take this in as a TXCMD.

A Link should be designed to have the default POR state of the **STP** output high and the data bus tri-stated. The USB3320 has weak pull-downs on the data bus to prevent these inputs from floating when not driven. These resistors are only used to prevent the ULPI interface from floating during events when the link ULPI pins may be tri-stated. The strength of the pull down resistors can be found in Table 4-4. The pull downs are not strong enough to pull the data bus low after a ULPI RXCMD, the Link must drive the data bus to idle after **DIR** is de-asserted.

© 2014 Microchip Technology Inc.

chanhvinh.com

In some cases, a Link may be software configured and not have control of its **STP** pin until after the transceiver has started. In this case, the USB3320 has in internal pull-up on the **STP** input pad which will pull **STP** high while the Link's **STP** output is tri-stated. The **STP** pull-up resistor is enabled on POR and can be disabled by setting the *InterfaceProtectDisable* bit 7 of the Interface Control register.

The **STP** pull-up resistor will pull-up the Link's **STP** input high until the Link configures and drives **STP** high. After the Link completes its start-up, **STP** can be synchronously driven low.

A Link design which drives **STP** high during POR can disable the pull-up resistor on **STP** by setting *InterfaceProtectDisable* bit to 1. A motivation for this is to reduce the suspend current. In Low Power Mode, **STP** is held low, which would draw current through the pull-up resistor on **STP**.

6.3.3.2 Warm Reset

Designers should also consider the case of a warm restart of a Link with a transceiver in Low Power Mode. After the transceiver enters Low Power Mode, **DIR** is asserted and the clock is stopped. The USB3320 looks for **STP** to be asserted to re-start the clock and then resume normal synchronous operation.

Should the USB3320 be suspended in Low Power Mode, and the Link receives a hardware reset, the transceiver must be able to recover from Low Power Mode and start its clock. If the Link asserts **STP** on reset, the transceiver will exit Low Power Mode and start its clock.

If the Link does not assert **STP** on reset, the interface protection pull-up can be used. When the Link is reset, its **STP** output will tri-state and the pull-up resistor will pull **STP** high, signaling the transceiver to restart its clock.

6.3.4 MINIMIZING CURRENT IN LOW POWER MODE

In order to minimize the suspend current in Low Power Mode, the OTG comparators can be disabled to reduce suspend current. In Low Power Mode, the VbusVld and SessEnd comparators are not needed and can be disabled by clearing the associated bits in both the USB Interrupt Enable Rising and USB Interrupt Enable Falling registers. By disabling the interrupt in BOTH the rise and fall registers, the SessEnd and VbusVld comparators are turned off. The *IdFloatRise* and *IdFloatFall* bits in Carkit Interrupt Enable register should also be disabled if they were set. When exiting Low Power Mode, the Link should immediately re-enable the VbusVld and SessEnd comparators if host or OTG functionality is required.

In addition to disabling the OTG comparators in Low Power Mode, the Link may choose to disable the Interface Protect Circuit. By setting the *InterfaceProtectDisable* bit high in the Interface Control register, the Link can disable the pull-up resistor on **STP**. When **RESETB** is low the Interface Protect Circuit will be disabled.

6.4 Full Speed/Low Speed Serial Modes

The USB3320 includes two serial modes to support legacy Links which use either the 3pin or 6pin serial format. To enter either serial mode, the Link will need to write a 1 to the *6-pin FsLsSerialMode* or the *3-pin FsLsSerialMode* bits in the Interface control register. Serial Mode may be used to conserve power when attached to a device that is not capable of operating in Hi-Speed.

The serial modes are entered in the same manner as the entry into Low Power Mode. The Link writes the Interface Control register bit for the specific serial mode. The USB3320 will assert **DIR** and shut off the clock after at least five clock cycles. Then the data bus goes to the format of the serial mode selected. Before entering Serial Mode the Link must set the ULPI transceiver to the appropriate mode as defined in Table 5-1.

In ULPI Output Clock Mode, the transceiver will shut off the 60MHz clock to conserve power. Should the Link need the 60MHz clock to continue during the serial mode of operation, the *ClockSuspendM* bit[3] of the Interface Control Register should be set before entering a serial mode. If set, the 60 MHz clock will be present during serial modes.

In serial mode, interrupts are possible from unmasked sources. The state of each interrupt source is sampled prior to the assertion of **DIR** and this is compared against the asynchronous level from interrupt source.

Exiting the serial modes is the same as exiting Low Power Mode. The Link must assert **STP** to signal the transceiver to exit serial mode. When the transceiver can accept a command, **DIR** is de-asserted and the transceiver will wait until the Link de-asserts **STP** to resume synchronous ULPI operation. The **RESETB** pin can also be pulsed low to reset the USB3320 and return it to Synchronous Mode.

© 2014 Microchip Technology Inc.

chanhvinh.com

6.4.1 3PIN FS/LS SERIAL MODE

Three pin serial mode utilizes the data bus pins for the serial functions shown in Table 6-5.

TABLE 6-5: PIN DEFINITIONS IN 3 PIN SERIAL MODE

Signal	Connected To	Direction	Description
tx_enable	**DATA[0]**	IN	Active High transmit enable.
data	**DATA[1]**	I/O	TX differential data on DP/DM when tx_enable is high. RX differential data from DP/DM when tx_enable is low.
SE0	**DATA[2]**	I/O	TX SE0 on DP/DM when tx_enable is high. RX SE0_b from DP/DM when tx_enable is low.
interrupt	**DATA[3]**	OUT	Asserted when any unmasked interrupt occurs. Active high.
Reserved	**DATA[7:4]**	OUT	Driven Low.

6.4.2 6PIN FS/LS SERIAL MODE

Six pin serial mode utilizes the data bus pins for the serial functions shown in Table 6-6.

TABLE 6-6: PIN DEFINITIONS IN 6 PIN SERIAL MODE

Signal	Connected To	Direction	Description
tx_enable	**DATA[0]**	IN	Active High transmit enable.
tx_data	**DATA[1]**	IN	Tx differential data on DP/DM when tx_enable is high.
tx_se0	**DATA[2]**	IN	Tx SE0 on DP/DM when tx_enable is high.
interrupt	**DATA[3]**	OUT	Asserted when any unmasked interrupt occurs. Active high.
rx_dp	**DATA[4]**	OUT	Single ended receive data on DP.
rx_dm	**DATA[5]**	OUT	Single ended receive data on DM.
rx_rcv	**DATA[6]**	OUT	Differential receive data from DP and DM.
Reserved	**DATA[7]**	OUT	Driven Low.

6.5 Carkit Mode

The USB3320 includes Carkit Mode to support a USB UART and USB Audio Mode.

By entering Carkit Mode, the USB3320 current drain is minimized. When operating in ULPI Input Clock Mode (60MHz REFCLK Mode), the **CLKOUT** is stopped to conserve power by default. The Link may configure the 60MHz clock to continue by setting the *ClockSuspendM* bit of the Interface Control register before entering Carkit Mode. If set, the 60 MHz clock will continue during the Carkit Mode of operation.

In Carkit Mode, interrupts are possible if they have been enabled in the Carkit Interrupt Enable register. The state of each interrupt source is sampled prior to the assertion of **DIR** and this is compared against the asynchronous level from interrupt source. In Carkit Mode, the Linestate signals are not available per the ULPI specification.

Exiting Carkit Mode is the same as exiting Low Power Mode as described in Section 6.3.2. The Link must assert **STP** to signal the transceiver to exit serial mode. When the transceiver can accept a command, **DIR** is de-asserted and the transceiver will wait until the Link de-asserts **STP** to resume synchronous ULPI operation. The **RESETB** pin can also be pulsed low to reset the USB3320 and return it to Synchronous Mode.

6.5.1 USB UART MODE

The USB3320 can be placed into UART Mode by first setting the *TxdEn* and *RxdEn* bits in the Carkit Control register. Then the Link can set the *CarkitMode* bit in the Interface Control register. The *TxdEn* and *RxdEn* bits must be written before the *CarkitMode* bit.

© 2014 Microchip Technology Inc.

chanhvinh.com

TABLE 6-7: ULPI REGISTER PROGRAMMING EXAMPLE TO ENTER UART MODE

R/W	Address (HEX)	Value (HEX)	Description	Result
W	04	49	Configure Non-Driving mode Select FS transmit edge rates	*OpMode*=01 *XcvrSelect*=01
W	39	00	Set regulator to 3.3V	*UART RegOutput*=00
W	19	0C	Enable UART connections	*RxdEn*=1 *TxdEn*=1
W	07	04	Enable carkit mode	*CarkitMode*=1

After the *CarkitMode* bit is set, the ULPI interface will become redefined as described in Table 6-8, and the USB3320 will transmit data through the **DATA[0]** to **DM** of the USB connector and receive data on **DP** and pass the information the Link on **DATA[1]**.

When entering UART mode, the regulator output will automatically switch to the value configured by the *UART RegOutput bits in the* USB IO & Power Management register and a pull-up will be applied internally to **DP** and **DM**. This will hold the UART in its default operating state.

While in UART mode, the transmit edge rates can be set to either the Full Speed USB or Low Speed USB edge rates by using the *XcvrSelect[1:0]* bits in the Function Control register.

TABLE 6-8: PIN DEFINITIONS IN CARKIT MODE

Signal	Connected To	Direction	Description
txd	**DATA[0]**	IN	UART TXD signal that is routed to the **DM** pin if the *TxdEn* is set in the Carkit Control register.
rxd	**DATA[1]**	OUT	UART RXD signal that is routed to the **DP** pin if the *RxdEn* bit is set in the Carkit Control register.
reserved	**DATA[2]**	OUT	Driven Low.
int	**DATA[3]**	OUT	Asserted when any unmasked interrupt occurs. Active high.
reserved	**DATA[4:7]**	OUT	Driven Low.

6.5.2 USB AUDIO MODE

When the USB3320 is powered in Synchronous Mode, the Audio switches can be enabled by asserting the *SpkLeftEn*, or *SpkRightEn* bits in the Carkit Control register. After the register write is complete, the USB3320 will immediately enable or disable the audio switch. Then the Link can set the *CarkitMode* bit in the Interface Control register. The *SpkLeftEn*, or *SpkRightEn* bits must be written before the *CarkitMode* bit.

TABLE 6-9: ULPI REGISTER PROGRAMMING EXAMPLE TO ENTER AUDIO MODE

R/W	Address (HEX)	Value (HEX)	Description	Result
W	04	48	Configure Non-Driving mode	*OpMode*=01
W	19	30	Enable Audio connections	*SpkrRightEn*=1, *SpkrLeftEn*=1
W	07	04	Enable carkit mode	*CarkitMode*=1

After the *CarkitMode* bit is set, the ULPI interface will become redefined as described in Table 6-8.

6.6 RID Converter Operation

The RID converter is designed to read the value of the ID resistance to ground and report back its value through the ULPI interface.

When a resistor to ground is applied to the **ID** pin the state of the IdGnd comparator will change from a 1 to a 0 as described in Section 5.6.1. If the USB3320 is in ULPI mode, an RXCMD will be generated with bit 6 low. If the USB3320 is in Low Power Mode (or one of the other non-ULPI modes), the DATA[3] interrupt signal will go high.

chanhvinh.com

After the USB3320 has detected the change of state on the **ID** pin, the RID converter can be used to determine the value of ID resistance. To start a ID resistance measurement, the *RidConversionStart* bit is set in the Vendor Rid Conversion register.

The Link can use one of two methods to determine when the RID Conversion is complete. One method is polling the *RidConversionStart* bit as described in Section 7.1.3.3. The preferred method is to set the *RidIntEn* bit in the Vendor Rid Conversion register. When *RidIntEn* is set, an RXCMD will be generated after the RID conversion is complete. As described in Table 6-3, the alt_int bit of the RXCMD will be set.

After the RID Conversion is complete, the Link can read *RidValue* from the Vendor Rid Conversion register.

6.7 Headset Audio Mode

This mode is designed to allow a user to view the status of several signals while using an analog audio headset with a USB connector. This feature, exclusive to Microchip, is provided as an alternate mode to the CarKit Mode defined in Section 6.5. In the CarKit Mode, the Link is unable to view the source of the interrupt on ID, except by returning to synchronous mode to read the ULPI registers. This forces the audio switches to be deactivated, and may glitch the audio signals. In addition, the Link cannot change the resistance on the ID pin without starting up the PHY to access the ULPI registers.

The Headset Audio Mode is entered by writing to the Headset Audio Mode register, and allows the Link access to the state of the **VBUS** and **ID** pins during audio without glitching the audio connection. The Headset Audio mode also enables the Link to change the resistance on the **ID** pin and to change the audio headset attached from mono to stereo.

The ULPI interface is redefined as shown in Table 6-10 when Headset Audio Mode is entered.

TABLE 6-10: PIN DEFINITIONS IN HEADSET AUDIO MODE

Signal	Connected To	Direction	Description
SessVld	**DATA[0]**	OUT	Output of SessVld comparator
VbusVld	**DATA[1]**	OUT	Output of VbusVld Comparator (interrupt must be enabled)
IdGndDrv	**DATA[2]**	IN	Drives **ID** pin to ground when asserted 0b: Not connected 1b: Connects **ID** to ground.
	DATA[3]	OUT	Driven low
IdGround	**DATA[4]**	OUT	Asserted when the **ID** pin is grounded. 0b: **ID** pin is grounded 1b: **ID** pin is floating
IdFloat	**DATA[5]**	OUT	Asserted when the **ID** pin is floating. *IdPullup* or *d_pullup330* must be enabled as shown below.
IdPullup330	**DATA[6]**	IN	When enabled a 330kΩpullup is applied to the **ID** pin. This bit will also change the trip point of the IdGnd comparator to the value shown in Table 4-7. 0b: Disables the pull-up resistor 1b: Enables the pull-up resistor
IdPullup	**DATA[7]**	IN	Connects the 100kΩ pull-up resistor from the **ID** pin to **VDD3.3** 0b: Disables the pull-up resistor 1b: Enables the pull-up resistor

Exiting Headset Audio Mode is the same as exiting Low Power Mode as described in Section 6.3.2. The Link must assert **STP** to signal the PHY to exit. When the PHY can accept a command, **DIR** is de-asserted and the PHY will wait until the Link de-asserts **STP** to resume synchronous ULPI operation. The **RESETB** pin can also be pulsed low to reset the USB3320 and return it to Synchronous Mode.

© 2014 Microchip Technology Inc.

chanhvinh.com

7.0 ULPI REGISTER MAP

7.1 ULPI Register Array

The USB3320 Transceiver implements all of the ULPI registers detailed in the ULPI revision 1.1 specification. The complete USB3320 ULPI register set is shown in Table 7-1. All registers are 8 bits. This table also includes the default state of each register upon POR or de-assertion of **RESETB**, as described in Section 5.5.2. The RESET bit in the Function Control Register does not reset the bits of the ULPI register array. The Link should not read or write to any registers not listed in this table.

The USB3320 supports extended register access. The immediate register set (00-3Fh) can be accessed through either a immediate address or an extended register address.

TABLE 7-1: ULPI REGISTER MAP

Register Name	Default State	Address (6bit)			
		Read	Write	Set	Clear
Vendor ID Low	24h	00h	-	-	-
Vendor ID High	04h	01h	-	-	-
Product ID Low	07h	02h	-	-	-
Product ID High	00h	03h	-	-	-
Function Control	41h	04-06h	04h	05h	06h
Interface Control	00h	07-09h	07h	08h	09h
OTG Control	06h	0A-0Ch	0Ah	0Bh	0Ch
USB Interrupt Enable Rising	1Fh	0D-0Fh	0Dh	0Eh	0Fh
USB Interrupt Enable Falling	1Fh	10-12h	10h	11h	12h
USB Interrupt Status (Note 7-1)	00h	13h	-	-	-
USB Interrupt Latch	00h	14h	-	-	-
Debug	00h	15h	-	-	-
Scratch Register	00h	16-18h	16h	17h	18h
Carkit Control	00h	19-1Bh	19h	1Ah	1Bh
Reserved	00h	1Ch			
Carkit Interrupt Enable	00h	1D-1Fh	1Dh	1Eh	1Fh
Carkit Interrupt Status	00h	20h	-	-	-
Carkit Interrupt Latch	00h	21h	-	-	-
Reserved	00h	22-30h			
HS TX Boost	00h	31h	31h	-	-
Reserved	00h	32h	32h	-	-
Headset Audio Mode	00h	33h	33h	-	-
Reserved	00h	34-35h			
Vendor Rid Conversion	00h	36-38h	36h	37h	38h
USB IO & Power Management	04h	39-3Bh	39h	3Ah	3Bh
Reserved	00h	3C-3Fh			

Note 7-1 Dynamically updates to reflect current status of interrupt sources.

chanhvinh.com

7.1.1 ULPI REGISTER SET

The following registers are used for the ULPI interface.

7.1.1.1 Vendor ID Low

Address = 00h (read only)

Field Name	Bit	Access	Default	Description
Vendor ID Low	7:0	rd	24h	Microchip Vendor ID

7.1.1.2 Vendor ID High

Address = 01h (read only)

Field Name	Bit	Access	Default	Description
Vendor ID High	7:0	rd	04h	Microchip Vendor ID

7.1.1.3 Product ID Low

Address = 02h (read only)

Field Name	Bit	Access	Default	Description
Product ID Low	7:0	rd	07h	Microchip Product ID

7.1.1.4 Product ID High

Address = 03h (read only)

Field Name	Bit	Access	Default	Description
Product ID High	7:0	rd	00h	Microchip Product ID

7.1.1.5 Function Control

Address = 04-06h (read), 04h (write), 05h (set), 06h (clear)

Field Name	Bit	Access	Default	Description
XcvrSelect[1:0]	1:0	rd/w/s/c	01b	Selects the required transceiver speed. 00b: Enables HS transceiver 01b: Enables FS transceiver 10b: Enables LS transceiver 11b: Enables FS transceiver for LS packets (FS preamble automatically pre-pended)
TermSelect	2	rd/w/s/c	0b	Controls the DP and DM termination depending on *XcvrSelect*, *OpMode*, *DpPulldown*, and *DmPulldown*. The DP and DM termination is detailed in Table 5-1.
OpMode	4:3	rd/w/s/c	00b	Selects the required bit encoding style during transmit. 00b: Normal Operation 01b: Non-Driving 10b: Disable bit-stuff and NRZI encoding 11b: Reserved
Reset	5	rd/w/s/c	0b	Active high transceiver reset. This reset does not reset the ULPI interface or register set. Automatically clears after reset is complete.

© 2014 Microchip Technology Inc.

chanhvinh.com

Field Name	Bit	Access	Default	Description
SuspendM	6	rd/w/s/c	1b	Active low PHY suspend. When cleared the transceiver will enter Low Power Mode as detailed in Section 6.3. Automatically set when exiting Low Power Mode.
Reserved	7	rd	0b	Read only, 0.

7.1.1.6 Interface Control

Address = 07-09h (read), 07h (write), 08h (set), 09h (clear)

Field Name	Bit	Access	Default	Description
6-pin FsLsSerialMode	0	rd/w/s/c	0b	When asserted the ULPI interface is redefined to the 6-pin Serial Mode. The transceiver will automatically clear this bit when exiting serial mode.
3-pin FsLsSerialMode	1	rd/w/s/c	0b	When asserted the ULPI interface is redefined to the 3-pin Serial Mode. The transceiver will automatically clear this bit when exiting serial mode.
CarkitMode	2	rd/w/s/c	0b	When asserted the ULPI interface is redefined to the Carkit interface. The transceiver will automatically clear this bit when exiting Carkit Mode.
ClockSuspendM	3	rd/w/s/c	0b	Enables Link to turn on 60MHz CLKOUT in Serial Mode or Carkit Mode. 0b: Disable clock in serial or Carkit Mode. 1b: Enable clock in serial or Carkit Mode.
AutoResume	4	rd/w/s/c	0b	Only applicable in Host mode. Enables the transceiver to automatically transmit resume signaling. This function is detailed in Section 6.2.4.4.
IndicatorComplement	5	rd/w/s/c	0b	Inverts the EXTVBUS signal. This function is detailed in Section 5.6.2. **Note:** The EXTVBUS signal is always high on the USB3320.
IndicatorPassThru	6	rd/w/s/c	0b	Disables and'ing the internal VBUS comparator with the EXTVBUS signal when asserted. This function is detailed in Section 5.6.2. **Note:** The EXTVBUS signal is always high on the USB3320.
InterfaceProtectDisable	7	rd/w/s/c	0b	Used to disable the integrated **STP** pull-up resistor used for interface protection. This function is detailed in Section 6.3.3.

7.1.1.7 OTG Control

Address = 0A-0Ch (read), 0Ah (write), 0Bh (set), 0Ch (clear)

Field Name	Bit	Access	Default	Description
IdPullup	0	rd/w/s/c	0b	Connects a 100kΩ pull-up resistor from the **ID** pin to **VDD33** 0b: Disables the pull-up resistor 1b: Enables the pull-up resistor
DpPulldown	1	rd/w/s/c	1b	Enables the 15k Ohm pull-down resistor on **DP**. 0b: Pull-down resistor not connected 1b: Pull-down resistor connected
DmPulldown	2	rd/w/s/c	1b	Enables the 15k Ohm pull-down resistor on **DM**. 0b: Pull-down resistor not connected 1b: Pull-down resistor connected

© 2014 Microchip Technology Inc.

chanhvinh.com

Field Name	Bit	Access	Default	Description
DischrgVbus	3	rd/w/s/c	0b	This bit is only used during SRP. Connects a resistor from VBUS to ground to discharge **VBUS**. 0b: disconnect resistor from **VBUS** to ground 1b: connect resistor from **VBUS** to ground
ChrgVbus	4	rd/w/s/c	0b	This bit is only used during SRP. Connects a resistor from **VBUS** to **VDD33** to charge **VBUS** above the SessValid threshold. 0b: disconnect resistor from **VBUS** to **VDD33** 1b: connect resistor from **VBUS** to **VDD33**
DrvVbus	5	rd/w/s/c	0b	Enables external 5 volt supply to drive 5 volts on VBUS. This signal is or'ed with *DrvVbusExternal*. 0b: Do not drive Vbus, **CPEN** driven low. 1b: Drive Vbus, **CPEN** driven high.
DrvVbusExternal	6	rd/w/s/c	0b	Enables external 5 volt supply to drive 5 volts on VBUS. This signal is or'ed with *DrvVbus*. 0b: Do not drive Vbus, **CPEN** driven low. 1b: Drive Vbus, **CPEN** driven high.
UseExternalVbus Indicator	7	rd/w/s/c	0b	Tells the transceiver to use an external VBUS over-current or voltage indicator. This function is detailed in Section 5.6.2. 0b: Use the internal VbusValid comparator 1b: Use the EXTVBUS input as for VbusValid signal. **Note:** The EXTVBUS signal is always high on the USB3320.

7.1.1.8 USB Interrupt Enable Rising

Address = 0D-0Fh (read), 0Dh (write), 0Eh (set), 0Fh (clear)

Field Name	Bit	Access	Default	Description
HostDisconnect Rise	0	rd/w/s/c	1b	Generate an interrupt event notification when Hostdisconnect changes from low to high. Applicable only in host mode.
VbusValid Rise	1	rd/w/s/c	1b	Generate an interrupt event notification when Vbusvalid changes from low to high.
SessValid Rise	2	rd/w/s/c	1b	Generate an interrupt event notification when SessValid changes from low to high.
SessEnd Rise	3	rd/w/s/c	1b	Generate an interrupt event notification when SessEnd changes from low to high.
IdGnd Rise	4	rd/w/s/c	1b	Generate an interrupt event notification when IdGnd changes from low to high.
Reserved	7:5	rd	000b	Read only, 0.

7.1.1.9 USB Interrupt Enable Falling

Address = 10-12h (read), 10h (write), 11h (set), 12h (clear)

Field Name	Bit	Access	Default	Description
HostDisconnect Fall	0	rd/w/s/c	1b	Generate an interrupt event notification when Hostdisconnect changes from high to low. Applicable only in host mode.
VbusValid Fall	1	rd/w/s/c	1b	Generate an interrupt event notification when Vbusvalid changes from high to low.
SessValid Fall	2	rd/w/s/c	1b	Generate an interrupt event notification when SessValid changes from high to low.

© 2014 Microchip Technology Inc.

chanhvinh.com

Field Name	Bit	Access	Default	Description
SessEnd Fall	3	rd/w/s/c	1b	Generate an interrupt event notification when SessEnd changes from high to low.
IdGnd Fall	4	rd/w/s/c	1b	Generate an interrupt event notification when IdGnd changes from high to low.
Reserved	7:5	rd	000b	Read only, 0.

7.1.1.10 USB Interrupt Status

Address = 13h (read only)

This register dynamically updates to reflect current status of interrupt sources.

Field Name	Bit	Access	Default	Description
HostDisconnect	0	rd	0b	Current value of the UTMI+ Hi-Speed Hostdisconnect output. Applicable only in host mode.
VbusValid	1	rd	0b	Current value of the UTMI+ Vbusvalid output.
SessValid	2	rd	0b	Current value of the UTMI+ SessValid output.
SessEnd	3	rd	0b	Current value of the UTMI+ SessEnd output.
IdGnd	4	rd	0b	Current value of the UTMI+ IdGnd output.
Reserved	7:5	rd	000b	Read only, 0.

Note: The default conditions will match the current status of the comparators. The values shown are for an unattached OTG device.

7.1.1.11 USB Interrupt Latch

Address = 14h (read only with auto clear)

Field Name	Bit	Access	Default	Description
HostDisconnect Latch	0	rd (Note 7-2)	0b	Set to 1b by the transceiver when an unmasked event occurs on Hostdisconnect. Cleared when this register is read. Applicable only in host mode.
VbusValid Latch	1	rd (Note 7-2)	0b	Set to 1b by the transceiver when an unmasked event occurs on VbusValid. Cleared when this register is read.
SessValid Latch	2	rd (Note 7-2)	0b	Set to 1b by the transceiver when an unmasked event occurs on SessValid. Cleared when this register is read.
SessEnd Latch	3	rd (Note 7-2)	0b	Set to 1b by the transceiver when an unmasked event occurs on SessEnd. Cleared when this register is read.
IdGnd Latch	4	rd (Note 7-2)	0b	Set to 1b by the transceiver when an unmasked event occurs on IdGnd. Cleared when this register is read.
Reserved	7:5	rd	000b	Read only, 0.

Note 7-2 rd: Read Only with auto clear.

7.1.1.12 Debug

Address = 15h (read only)

Field Name	Bit	Access	Default	Description
Linestate0	0	rd	0b	Contains the current value of Linestate[0].
Linestate1	1	rd	0b	Contains the current value of Linestate[1].
Reserved	7:2	rd	000000b	Read only, 0.

chanhvinh.com

7.1.1.13 Scratch Register

Address = 16-18h (read), 16h (write), 17h (set), 18h (clear)

Field Name	Bit	Access	Default	Description
Scratch	7:0	rd/w/s/c	00h	Empty register byte for testing purposes. Software can read, write, set, and clear this register and the transceiver functionality will not be affected.

7.1.2 CARKIT CONTROL REGISTERS

The following registers are used to set-up and enable the USB UART and USB Audio functions.

7.1.2.1 Carkit Control

Address = 19-1Bh (read), 19h (write), 1Ah (set), 1Bh (clear)

This register is used to program the USB3320 into and out of the Carkit Mode. When entering the UART mode the Link must first set the desired *TxdEn* and the *RxdEn* bits and then transition to Carkit Mode by setting the *CarkitMode* bit in the Interface Control Register. When *RxdEn* is not set then the **DATA[1]** pin is held to a logic high.

Field Name	Bit	Access	Default	Description
CarkitPwr	0	rd	0b	Read only, 0.
IdGndDrv	1	rd/w/s/c	0b	Drives **ID** pin to ground
TxdEn	2	rd/w/s/c	0b	Connects UART TXD (**DATA[0]**) to **DM**
RxdEn	3	rd/w/s/c	0b	Connects UART RXD (**DATA[1]**) to **DP**
SpkLeftEn	4	rd/w/s/c	0b	Connects **DM** pin to **SPK_L** pin
SpkRightEn	5	rd/w/s/c	0b	Connects **DP** pin to **SPK_R** pin. See Note below.
MicEn	6	rd/w/s/c	0b	Connects **DP** pin to **SPK_R** pin. See Note below.
Reserved	7	rd	0b	Read only, 0.

Note: If *SpkRightEn* or *MicEn* are asserted the **DP** pin will be connected to **SPK_R**. To disconnect the **DP** pin from the **SPK_R** pin both *SpkrRightEn* and *MicEn* must be set to de-asserted.

If using USB UART mode the UART data will appear at the **SPK_L** and **SPK_R** pins if the corresponding *SpkLeftEn*, *SpkRightEn*, or *MicEn* switches are enabled.

If using USB Audio the *TxdEn* and *RxdEn* bits should not be set when the *SpkLeftEn*, *SpkRightEn*, or *MicEn* switches are enabled. The USB single-ended receivers described in Section 5.2.1 are disabled when either *SpkLeftEn*, *SpkRightEn*, or *MicEn* are set.

7.1.2.2 Carkit Interrupt Enable

Address = 1D-1Fh (read), 1Dh (write), 1Eh (set), 1Fh (clear)

Field Name	Bit	Access	Default	Description
IdFloatRise	0	rd/w/s/c	0b	When enabled an interrupt will be generated on the alt_int of the RXCMD byte when the **ID** pin transitions from non-floating to floating. The *IdPullup* bit in the OTG Control register should be set.
IdFloatFall	1	rd/w/s/c	0b	When enabled an interrupt will be generated on the alt_int of the RXCMD byte when the **ID** pin transitions from floating to non-floating. The *IdPullup* bit in the OTG Control register should be set.
CarIntDet	2	rd	0b	Not Implemented. Reads as 0b.
CarDpRise	3	rd	0b	Not Implemented. Reads as 0b.
CarDpFall	4	rd	0b	Not Implemented. Reads as 0b.

© 2014 Microchip Technology Inc.

chanhvinh.com

Field Name	Bit	Access	Default	Description
RidIntEn	5	rd/w/s/c	0b	When enabled an interrupt will be generated on the alt_int of the RXCMD byte when *RidConversionDone* bit is asserted. **Note:** This register bit is or'ed with the *RidIntEn* bit of the Vendor Rid Conversion register described in Section 7.1.3.3.
Reserved	7:6	rd	00b	Read only, 0.

7.1.2.3 Carkit Interrupt Status

Address = 20h (read only)

Field Name	Bit	Access	Default	Description
IdFloat	0	rd	0b	Asserted when the **ID** pin is floating. *IdPullup* must be enabled.
CarIntDet	1	rd	0b	Not Implemented. Reads as 0b.
CarDp	2	rd	0b	Not Implemented. Reads as 0b.
RidValue	5:3	rd	000b	Conversion value of Rid resistor 000: 0 ohms 001: 75 ohms 010: 102K ohms 011: 200K ohms 100: 440K ohms 101: ID floating 111: Error **Note:** *RidValue* can also be read from the Vendor Rid Conversion register described in Section 7.1.3.3.
RidConversionDone	6	rd	0b	Automatically asserted by the USB3320 when the Rid Conversion is finished. The conversion will take 282uS. This bit will auto clear when the *RidValue* is read from the Rid Conversion Register. Reading the *RidValue* from the Carkit Interrupt Status register will not clear either *RidConversionDone* status bit. **Note:** *RidConversionDone* can also be read from the Vendor Rid Conversion register described in Section 7.1.3.3.
Reserved	7	rd	0b	Read only, 0.

7.1.2.4 Carkit Interrupt Latch

Address = 21h (read only with auto-clear)

Field Name	Bit	Access	Default	Description
IdFloat Latch	0	rd (Note 7-3)	0b	Asserted if the state of the **ID** pin changes from non-floating to floating while the *IdFloatRise* bit is enabled or if the state of the **ID** pin changes from floating to non-floating while the *IdFloatFall* bit is enabled.
CarIntDet Latch	1	rd	0b	Not Implemented. Reads as 0b.
CarDp Latch	2	rd	0b	Not Implemented. Reads as 0b.
RidConversionLatch	3	rd (Note 7-3)	0b	If *RidIntEn* is set and the state of the *RidConversionDone* bit changes from a 0 to 1 this bit will be asserted.
Reserved	7:4	rd	0000b	Read only, 0.

Note 7-3 rd: Read Only with auto clear.

chanhvinh.com

7.1.3 VENDOR REGISTER ACCESS

The vendor specific registers include the range from 30h to 3Fh. These can be accessed by the ULPI immediate register read / write.

7.1.3.1 HS TX Boost

Address = 31h (read / write)

Field Name	Bit	Access	Default	Description
Reserved	4:0	rd	00000b	Read only, 0.
Boost	6:5	rd/w	00b	Sets the HS transmitter amplitude as described in Section 5.2.1. 00b: Nominal 01b: Enables 11.1% increased drive strength 10b: Enables 7.4% increased drive strength 11b: Enables 3.7% increased drive strength
Reserved	7	rd	0b	Read only, 0.

7.1.3.2 Headset Audio Mode

Address = 33h (read / write)

Field Name	Bit	Access	Default	Description
HeadsetAudioEn	3:0	rd/w	0000b	When this field is set to a value of 1010, the Headset Audio Mode is enabled as described in Section 6.7.
Reserved	7:4	rd	0h	Read only, 0.

7.1.3.3 Vendor Rid Conversion

Address = 36-38h (read), 36h (write), 37h (set), 38h (clear)

Field Name	Bit	Access	Default	Description
RidValue	2:0	rd/w	000b	Conversion value of Rid resistor 000: 0 ohms 001: 75 ohms 010: 100K ohms 011: 200K ohms 100: 440K ohms 101: ID floating 111: Error **Note:** *RidValue* can also be read from the Carkit Interrupt Status Register.
RidConversionDone	3	rd (Note 7-4)	0b	Automatically asserted by the USB3320 when the Rid Conversion is finished. The conversion will take 282uS. This bit will auto clear when the *RidValue* is read from the Rid Conversion Register. Reading the *RidValue* from the Carkit Interrupt Status Register will not clear either *RidConversionDone* status bit. **Note:** *RidConversionDone* can also be read from the Carkit Interrupt Status Register.
RidConversionStart	4	rd/w/s/c	0b	When this bit is asserted either through a register write or set, the Rid converter will read the value of the ID resistor. When the conversion is complete this bit will auto clear.
Reserved	5	rd/w/s/c	0b	This bit must remain at 0.

© 2014 Microchip Technology Inc.

chanhvinh.com

Field Name	Bit	Access	Default	Description
RidIntEn	6	rd/w/s/c	0b	When enabled an interrupt will be generated on the alt_int of the RXCMD byte when *RidConversionDone* bit is asserted. **Note:** This register bit is or'ed with the *RidIntEn* bit of the Carkit Interrupt Status register.
Reserved	7	rd	0b	Read only, 0.

Note 7-4 rd: Read Only with auto clear.

7.1.3.4 USB IO & Power Management

Address = 39-3Bh (read), 39h (write), 3Ah (set), 3Bh (clear)

Field Name	Bit	Access	Default	Description
Reserved	0	rd/w/s/c	0b	Read only, 0.
SwapDP/DM	1	rd/w/s/c	0b	When asserted, the **DP** and **DM** pins of the USB transceiver are swapped. This bit can be used to prevent crossing the DP/DM traces on the board. In UART mode, it swaps the routing to the **DP** and **DM** pins. In USB Audio Mode, it does not affect the **SPK_L** and **SPK_R** pins.
UART RegOutput	3:2	rd/w/s/c	01b	Controls the output voltage of the **VBAT** to **VDD33** regulator in UART mode. When the transceiver is switched from USB mode to UART mode regulator output will automatically change to the value specified in this register when *TxdEn* is asserted. 00: 3.3V 01: 3.0V (default) 10: 2.75V 11: 2.5V **Note:** When in USB Audio Mode the regulator will remain at 3.3V. When using this register it is recommended that the Link exit UART mode by using the **RESETB** pin.
ChargerPullupEnDP	4	rd/w/s/c	0b	Enables a Pull-up for USB Charger Detection when set on the **DP** pin. (The pull-up is automatically enabled in UART mode)
ChargerPullupEnDM	5	rd/w/s/c	0b	Enables a Pull-up for USB Charger Detection when set on the **DM** pin. (The pull-up is automatically enabled in UART mode)
USB RegOutput	7:6	rd/w/s/c	00b	Controls the output voltage of the **VBAT** to **VDD33** regulator in USB mode. When the transceiver is in Synchronous Mode, Serial Mode, or Low Power Mode, the regulator output will be the value specified in this register. 00: 3.3V (default) 01: 3.0V 10: 2.75V 11: 2.5V

chanhvinh.com

8.0 APPLICATION NOTES

8.1 Application Diagram

The USB3320 requires few external components as shown in the application diagrams. The USB 2.0 Specification restricts the voltage at the VBUS pin to a maximum value of 5.25V. In some applications, the voltage will exceed this voltage, and the USB3320 provides an integrated overvoltage protection circuit. The overvoltage protection circuit works with an external resistor (R_{VBUS}) to lower the voltage at the **VBUS** pin, as described in Section 5.6.2.6.

Following POR or hardware reset, the voltage at CLKOUT must not exceed V_{IH_ED} as provided in Table 4-4.

TABLE 8-1: COMPONENT VALUES IN APPLICATION DIAGRAMS

Reference Designator	Value	Description	Notes
C_{OUT}	2.2µF	Bypass capacitor to ground (<1Ω ESR) for regulator stability.	Place as close as possible to the transceiver.
C_{VBUS}	See Table 8-2	Capacitor to ground required by the USB Specification. Microchip recommends <1Ω ESR.	Place near the USB connector.
C_{BYP}	System dependent.	Bypass capacitor to ground. Typical values used are 0.1 or 0.01 µF.	Place as close as possible to the transceiver.
C_{DC_LOAD}	System dependent.	The USB connector housing may be AC-coupled to the device ground.	Industry convention is to ground only the host side of the cable shield.
R_{VBUS}	1kΩ or 10kΩ	Series resistor to work with internal overvoltage protection. 10kΩ in device applications. See Table 5-7 for required values in Host or OTG applications.	See Section 5.6.2.6 for information regarding power dissipation.
R_{BIAS}	8.06kΩ (±1%)	Series resistor to establish reference voltage.	See Section 5.3 for information regarding power dissipation.

TABLE 8-2: CAPACITANCE VALUES AT VBUS OF USB CONNECTOR

Mode	MIN Value	MAX Value
Host	120µF	
Device	1µF	10µF
OTG	1µF	6.5µF

© 2014 Microchip Technology Inc.

chanhvinh.com

FIGURE 8-1: USB3320 APPLICATION DIAGRAM (DEVICE, ULPI OUTPUT CLOCK MODE, 24MHZ)

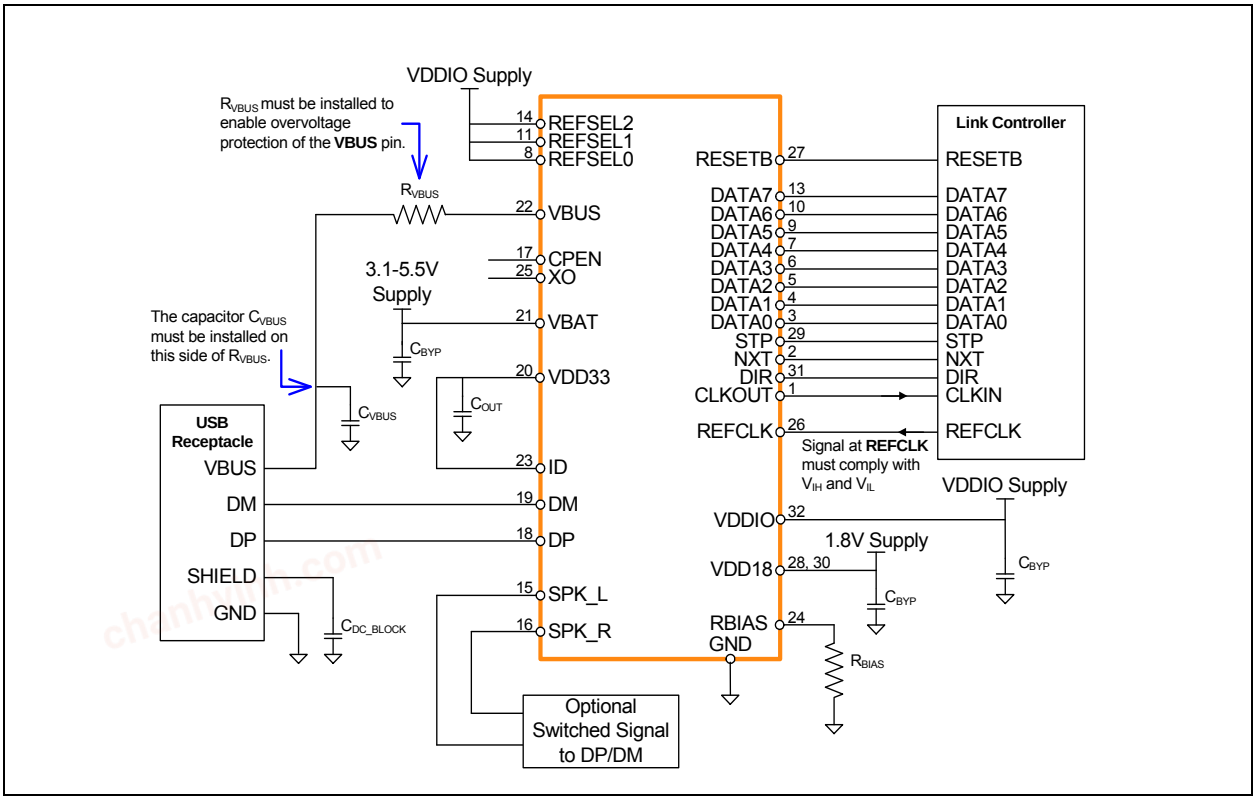

chanhvinh.com

FIGURE 8-2: USB3320 APPLICATION DIAGRAM (DEVICE, ULPI INPUT CLOCK MODE, 60MHZ)

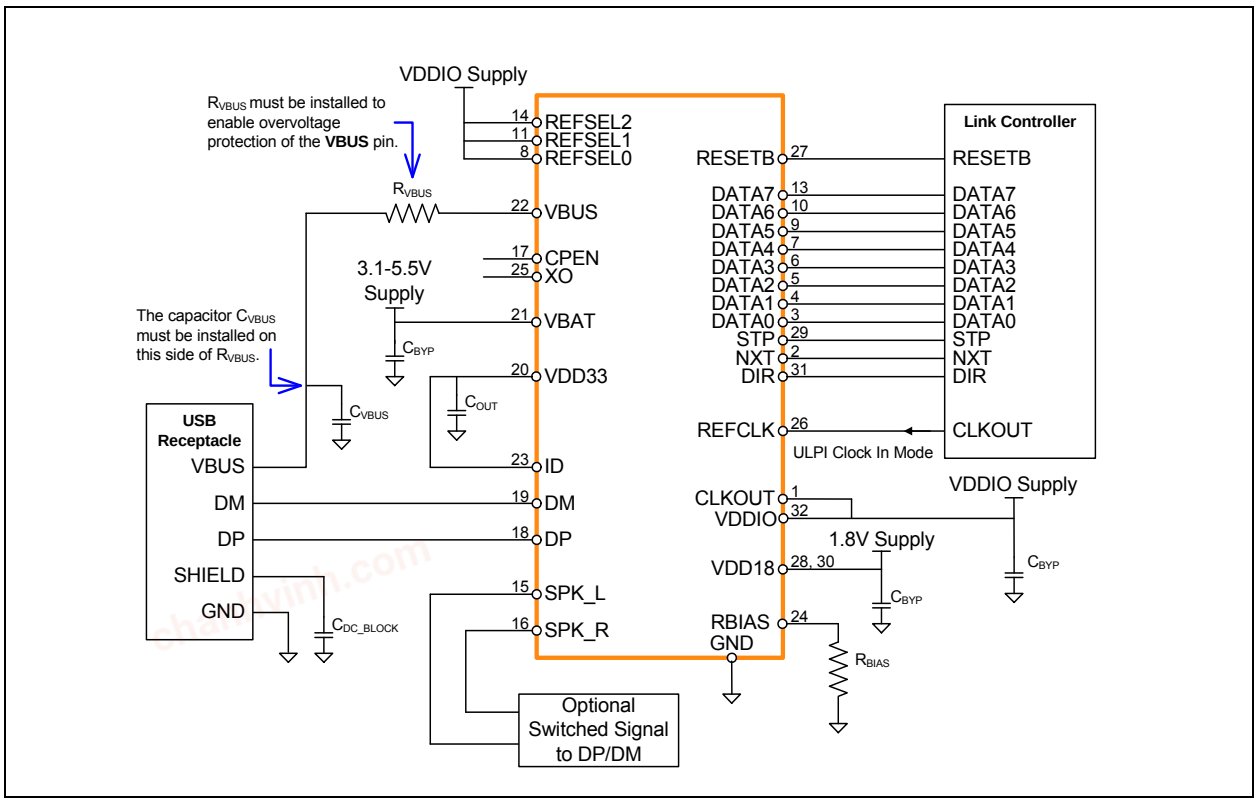

© 2014 Microchip Technology Inc.

chanhvinh.com

FIGURE 8-3: USB3320 APPLICATION DIAGRAM (HOST OR OTG, ULPI OUTPUT CLOCK MODE, 24MHZ)

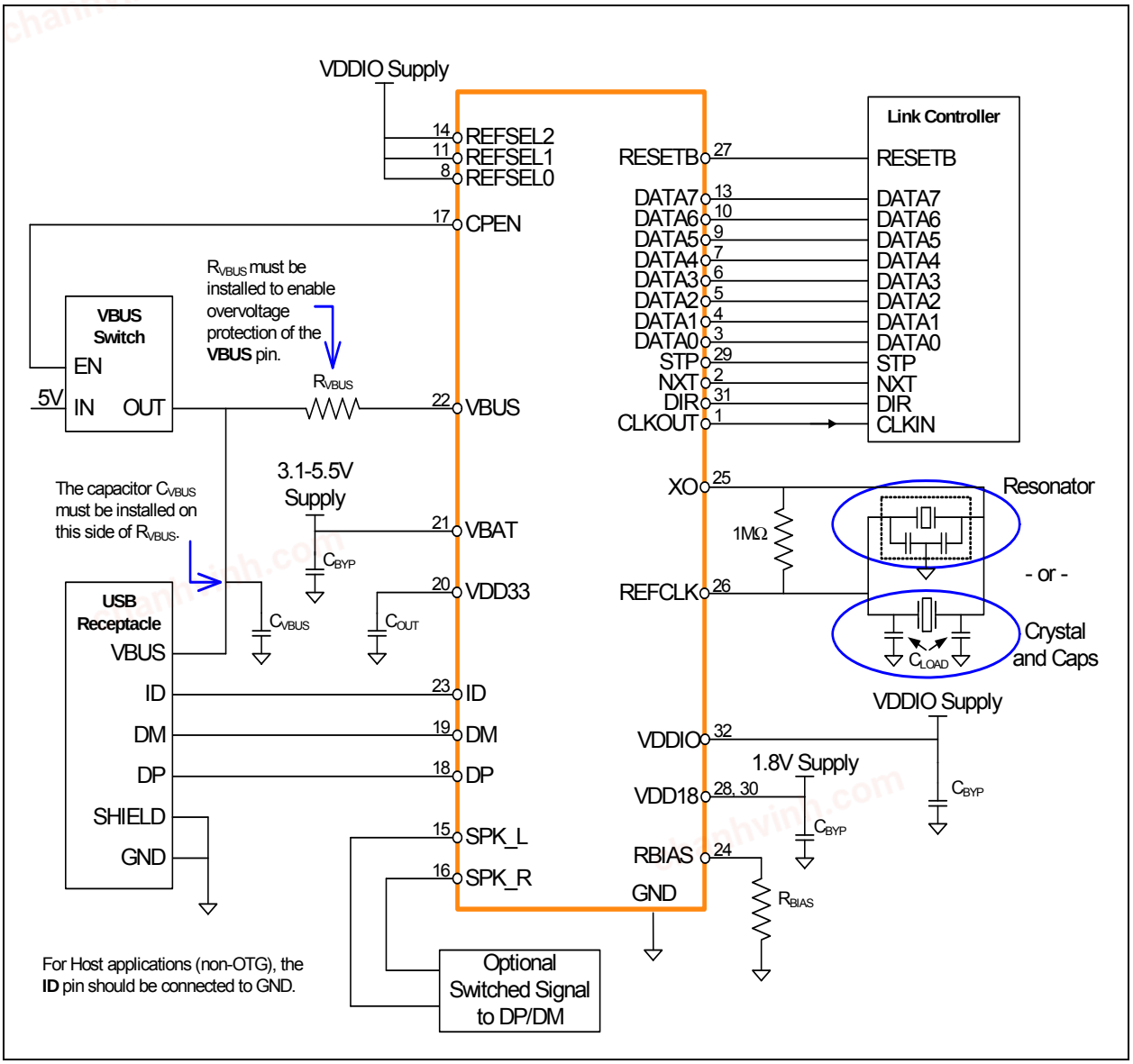

chanhvinh.com

8.2 Reference Designs

Microchip has generated reference designs for connecting the USB3320 to SOCs with a ULPI port. Please contact the Microchip sales office for more details.

8.3 ESD Performance

The USB3320 is protected from ESD strikes. By eliminating the requirement for external ESD protection devices, board space is conserved, and the board manufacturer is enabled to reduce cost. The advanced ESD structures integrated into the USB3320 protect the device whether or not it is powered up.

8.3.1 HUMAN BODY MODEL (HBM) PERFORMANCE

HBM testing verifies the ability to withstand the ESD strikes like those that occur during handling and manufacturing, and is done without power applied to the IC. To pass the test, the device must have no change in operation or performance due to the event. All pins on the USB3320 except the **REFCLK**, **SPK_L**, and **SPK_R** pins provide ±8kV HBM protection, as shown in Table 4-10.

8.3.2 EN/IEC 61000-4-2 PERFORMANCE

The EN/IEC 61000-4-2 ESD specification is an international standard that addresses system-level immunity to ESD strikes while the end equipment is operational. In contrast, the HBM ESD tests are performed at the device level with the device powered down.

Microchip contracts with Independent laboratories to test the USB3320 to EN/IEC 61000-4-2 in a working system. Reports are available upon request. Please contact your Microchip representative, and request information on 3rd party ESD test results. The reports show that systems designed with the USB3320 can safely provide the ESD performance shown in Table 4-10 without additional board level protection.

In addition to defining the ESD tests, EN/IEC 61000-4-2 also categorizes the impact to equipment operation when the strike occurs (ESD Result Classification). The USB3320 maintains an ESD Result Classification 1 or 2 when subjected to an EN/IEC 61000-4-2 (level 4) ESD strike.

Both air discharge and contact discharge test techniques for applying stress conditions are defined by the EN/IEC 61000-4-2 ESD document.

8.3.3 AIR DISCHARGE

To perform this test, a charged electrode is moved close to the system being tested until a spark is generated. This test is difficult to reproduce because the discharge is influenced by such factors as humidity, the speed of approach of the electrode, and construction of the test equipment.

8.3.4 CONTACT DISCHARGE

The uncharged electrode first contacts the USB connector to prepare this test, and then the probe tip is energized. This yields more repeatable results, and is the preferred test method. The independent test laboratories contracted by Microchip provide test results for both types of discharge methods.

© 2014 Microchip Technology Inc.

chanhvinh.com

9.0 PACKAGE INFORMATION

The USB3320 is offered in a compact 32 pin QFN package.

FIGURE 9-1: 32-PIN QFN, 5X5MM BODY, 0.5MM PITCH

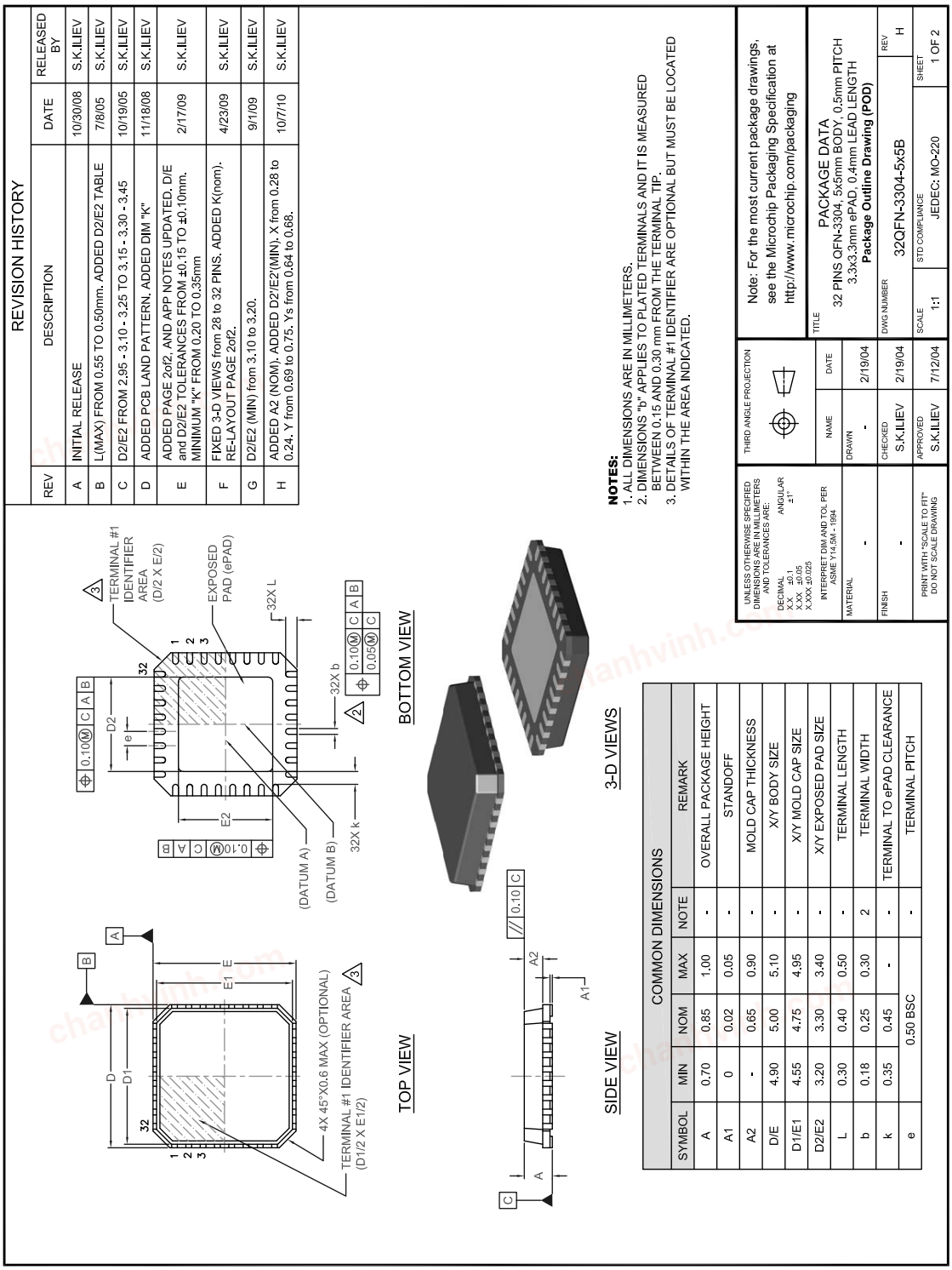

chanhvinh.com

FIGURE 9-1: 32-PIN QFN, 5X5MM BODY, 0.5MM PITCH (CONTINUED)

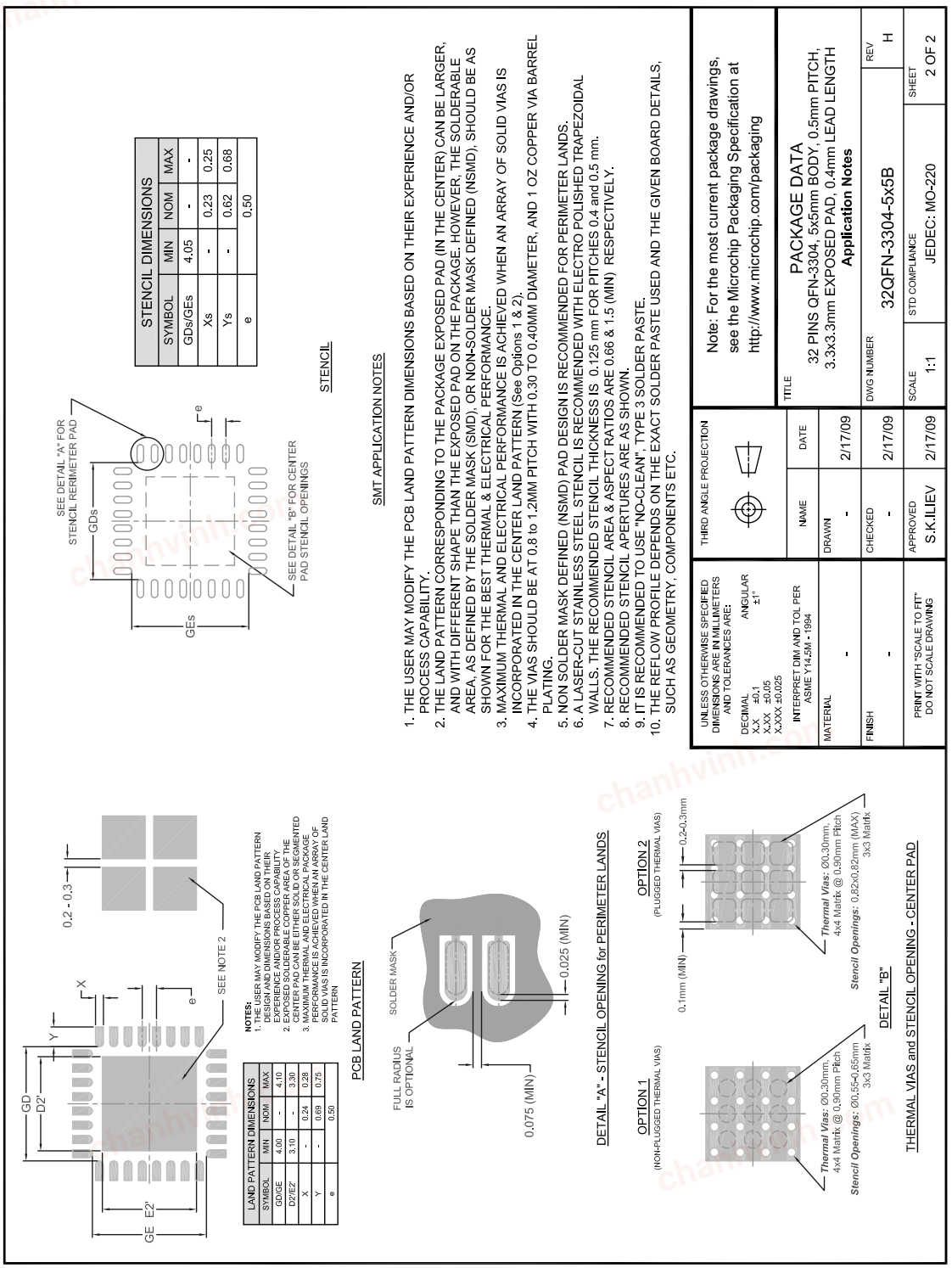

© 2014 Microchip Technology Inc.

chanhvinh.com

FIGURE 9-2: QFN, 5X5 TAPING DIMENSIONS AND PART ORIENTATION

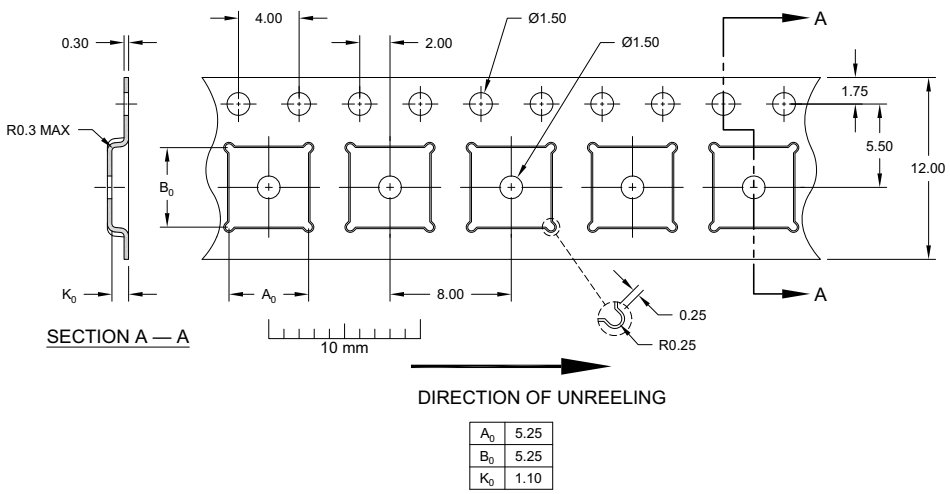

A_0	5.25
B_0	5.25
K_0	1.10

chanhvinh.com

APPENDIX A: DATA SHEET REVISION HISTORY

TABLE A-1: REVISION HISTORY

Revision Level & Date	Section/Figure/Entry	Correction
DS00001792A (08-14-14)	Replaces previous SMSC version Rev. 1.0 (07-14-09)	
Rev. 1.0 (07-14-09)	Initial Release	

© 2014 Microchip Technology Inc.

chanhvinh.com

THE MICROCHIP WEB SITE

Microchip provides online support via our WWW site at www.microchip.com. This web site is used as a means to make files and information easily available to customers. Accessible by using your favorite Internet browser, the web site contains the following information:

- **Product Support** – Data sheets and errata, application notes and sample programs, design resources, user's guides and hardware support documents, latest software releases and archived software
- **General Technical Support** – Frequently Asked Questions (FAQ), technical support requests, online discussion groups, Microchip consultant program member listing
- **Business of Microchip** – Product selector and ordering guides, latest Microchip press releases, listing of seminars and events, listings of Microchip sales offices, distributors and factory representatives

CUSTOMER CHANGE NOTIFICATION SERVICE

Microchip's customer notification service helps keep customers current on Microchip products. Subscribers will receive e-mail notification whenever there are changes, updates, revisions or errata related to a specified product family or development tool of interest.

To register, access the Microchip web site at www.microchip.com. Under "Support", click on "Customer Change Notification" and follow the registration instructions.

CUSTOMER SUPPORT

Users of Microchip products can receive assistance through several channels:

- Distributor or Representative
- Local Sales Office
- Field Application Engineer (FAE)
- Technical Support

Customers should contact their distributor, representative or field application engineer (FAE) for support. Local sales offices are also available to help customers. A listing of sales offices and locations is included in the back of this document.

Technical support is available through the web site at: http://www.microchip.com/support

chanhvinh.com

chanhvinh.com

USB3320

PRODUCT IDENTIFICATION SYSTEM

To order or obtain information, e.g., on pricing or delivery, refer to the factory or the listed sales office.

PART NO.	[X]	-	XXX	-	[X](1)
Device	Temperature Range		Package		Tape and Reel Option

Device:	USB3320	
Temperature Range:	Blank =	0°C to +85°C (Extended Commercial)
	i =	-40°C to +85°C (Industrial)
Package:	EZK =	32-pin QFN RoHS Compliant package
Tape and Reel Option:	Blank =	Standard packaging (tray)
	TR =	Tape and Reel(1)

Examples:

a) USB3320C-EZK

b) USB3320C-EZK-TR

Note 1: Tape and Reel identifier only appears in the catalog part number description. This identifier is used for ordering purposes and is not printed on the device package. Check with your Microchip Sales Office for package availability with the Tape and Reel option.

© 2014 Microchip Technology Inc.

chanhvinh.com

Note the following details of the code protection feature on Microchip devices:

- Microchip products meet the specification contained in their particular Microchip Data Sheet.
- Microchip believes that its family of products is one of the most secure families of its kind on the market today, when used in the intended manner and under normal conditions.
- There are dishonest and possibly illegal methods used to breach the code protection feature. All of these methods, to our knowledge, require using the Microchip products in a manner outside the operating specifications contained in Microchip's Data Sheets. Most likely, the person doing so is engaged in theft of intellectual property.
- Microchip is willing to work with the customer who is concerned about the integrity of their code.
- Neither Microchip nor any other semiconductor manufacturer can guarantee the security of their code. Code protection does not mean that we are guaranteeing the product as "unbreakable."

Code protection is constantly evolving. We at Microchip are committed to continuously improving the code protection features of our products. Attempts to break Microchip's code protection feature may be a violation of the Digital Millennium Copyright Act. If such acts allow unauthorized access to your software or other copyrighted work, you may have a right to sue for relief under that Act.

Information contained in this publication regarding device applications and the like is provided only for your convenience and may be superseded by updates. It is your responsibility to ensure that your application meets with your specifications. MICROCHIP MAKES NO REPRESENTATIONS OR WARRANTIES OF ANY KIND WHETHER EXPRESS OR IMPLIED, WRITTEN OR ORAL, STATUTORY OR OTHERWISE, RELATED TO THE INFORMATION, INCLUDING BUT NOT LIMITED TO ITS CONDITION, QUALITY, PERFORMANCE, MERCHANTABILITY OR FITNESS FOR PURPOSE**.** Microchip disclaims all liability arising from this information and its use. Use of Microchip devices in life support and/or safety applications is entirely at the buyer's risk, and the buyer agrees to defend, indemnify and hold harmless Microchip from any and all damages, claims, suits, or expenses resulting from such use. No licenses are conveyed, implicitly or otherwise, under any Microchip intellectual property rights.

Trademarks

The Microchip name and logo, the Microchip logo, dsPIC, FlashFlex, flexPWR, JukeBlox, KEELOQ, KEELOQ logo, Kleer, LANCheck, MediaLB, MOST, MOST logo, MPLAB, OptoLyzer, PIC, PICSTART, PIC^{32} logo, RightTouch, SpyNIC, SST, SST Logo, SuperFlash and UNI/O are registered trademarks of Microchip Technology Incorporated in the U.S.A. and other countries.

The Embedded Control Solutions Company and mTouch are registered trademarks of Microchip Technology Incorporated in the U.S.A.

Analog-for-the-Digital Age, BodyCom, chipKIT, chipKIT logo, CodeGuard, dsPICDEM, dsPICDEM.net, ECAN, In-Circuit Serial Programming, ICSP, Inter-Chip Connectivity, KleerNet, KleerNet logo, MiWi, MPASM, MPF, MPLAB Certified logo, MPLIB, MPLINK, MultiTRAK, NetDetach, Omniscient Code Generation, PICDEM, PICDEM.net, PICkit, PICtail, RightTouch logo, REAL ICE, SQI, Serial Quad I/O, Total Endurance, TSHARC, USBCheck, VariSense, ViewSpan, WiperLock, Wireless DNA, and ZENA are trademarks of Microchip Technology Incorporated in the U.S.A. and other countries.

SQTP is a service mark of Microchip Technology Incorporated in the U.S.A.

Silicon Storage Technology is a registered trademark of Microchip Technology Inc. in other countries.

GestIC is a registered trademarks of Microchip Technology Germany II GmbH & Co. KG, a subsidiary of Microchip Technology Inc., in other countries.

All other trademarks mentioned herein are property of their respective companies.

© 2014, Microchip Technology Incorporated, Printed in the U.S.A., All Rights Reserved.

ISBN: 9781632763631

QUALITY MANAGEMENT SYSTEM
CERTIFIED BY DNV
═ ISO/TS 16949 ═

Microchip received ISO/TS-16949:2009 certification for its worldwide headquarters, design and wafer fabrication facilities in Chandler and Tempe, Arizona; Gresham, Oregon and design centers in California and India. The Company's quality system processes and procedures are for its PIC® MCUs and dsPIC® DSCs, KEELOQ® code hopping devices, Serial EEPROMs, microperipherals, nonvolatile memory and analog products. In addition, Microchip's quality system for the design and manufacture of development systems is ISO 9001:2000 certified.

chanhvinh.com

Worldwide Sales and Service

AMERICAS

Corporate Office
2355 West Chandler Blvd.
Chandler, AZ 85224-6199
Tel: 480-792-7200
Fax: 480-792-7277
Technical Support:
http://www.microchip.com/support
Web Address:
www.microchip.com

Atlanta
Duluth, GA
Tel: 678-957-9614
Fax: 678-957-1455

Austin, TX
Tel: 512-257-3370

Boston
Westborough, MA
Tel: 774-760-0087
Fax: 774-760-0088

Chicago
Itasca, IL
Tel: 630-285-0071
Fax: 630-285-0075

Cleveland
Independence, OH
Tel: 216-447-0464
Fax: 216-447-0643

Dallas
Addison, TX
Tel: 972-818-7423
Fax: 972-818-2924

Detroit
Novi, MI
Tel: 248-848-4000

Houston, TX
Tel: 281-894-5983

Indianapolis
Noblesville, IN
Tel: 317-773-8323
Fax: 317-773-5453

Los Angeles
Mission Viejo, CA
Tel: 949-462-9523
Fax: 949-462-9608

New York, NY
Tel: 631-435-6000

San Jose, CA
Tel: 408-735-9110

Canada - Toronto
Tel: 905-673-0699
Fax: 905-673-6509

ASIA/PACIFIC

Asia Pacific Office
Suites 3707-14, 37th Floor
Tower 6, The Gateway
Harbour City, Kowloon
Hong Kong
Tel: 852-2943-5100
Fax: 852-2401-3431

Australia - Sydney
Tel: 61-2-9868-6733
Fax: 61-2-9868-6755

China - Beijing
Tel: 86-10-8569-7000
Fax: 86-10-8528-2104

China - Chengdu
Tel: 86-28-8665-5511
Fax: 86-28-8665-7889

China - Chongqing
Tel: 86-23-8980-9588
Fax: 86-23-8980-9500

China - Hangzhou
Tel: 86-571-8792-8115
Fax: 86-571-8792-8116

China - Hong Kong SAR
Tel: 852-2943-5100
Fax: 852-2401-3431

China - Nanjing
Tel: 86-25-8473-2460
Fax: 86-25-8473-2470

China - Qingdao
Tel: 86-532-8502-7355
Fax: 86-532-8502-7205

China - Shanghai
Tel: 86-21-5407-5533
Fax: 86-21-5407-5066

China - Shenyang
Tel: 86-24-2334-2829
Fax: 86-24-2334-2393

China - Shenzhen
Tel: 86-755-8864-2200
Fax: 86-755-8203-1760

China - Wuhan
Tel: 86-27-5980-5300
Fax: 86-27-5980-5118

China - Xian
Tel: 86-29-8833-7252
Fax: 86-29-8833-7256

China - Xiamen
Tel: 86-592-2388138
Fax: 86-592-2388130

China - Zhuhai
Tel: 86-756-3210040
Fax: 86-756-3210049

ASIA/PACIFIC

India - Bangalore
Tel: 91-80-3090-4444
Fax: 91-80-3090-4123

India - New Delhi
Tel: 91-11-4160-8631
Fax: 91-11-4160-8632

India - Pune
Tel: 91-20-3019-1500

Japan - Osaka
Tel: 81-6-6152-7160
Fax: 81-6-6152-9310

Japan - Tokyo
Tel: 81-3-6880- 3770
Fax: 81-3-6880-3771

Korea - Daegu
Tel: 82-53-744-4301
Fax: 82-53-744-4302

Korea - Seoul
Tel: 82-2-554-7200
Fax: 82-2-558-5932 or
82-2-558-5934

Malaysia - Kuala Lumpur
Tel: 60-3-6201-9857
Fax: 60-3-6201-9859

Malaysia - Penang
Tel: 60-4-227-8870
Fax: 60-4-227-4068

Philippines - Manila
Tel: 63-2-634-9065
Fax: 63-2-634-9069

Singapore
Tel: 65-6334-8870
Fax: 65-6334-8850

Taiwan - Hsin Chu
Tel: 886-3-5778-366
Fax: 886-3-5770-955

Taiwan - Kaohsiung
Tel: 886-7-213-7830

Taiwan - Taipei
Tel: 886-2-2508-8600
Fax: 886-2-2508-0102

Thailand - Bangkok
Tel: 66-2-694-1351
Fax: 66-2-694-1350

EUROPE

Austria - Wels
Tel: 43-7242-2244-39
Fax: 43-7242-2244-393

Denmark - Copenhagen
Tel: 45-4450-2828
Fax: 45-4485-2829

France - Paris
Tel: 33-1-69-53-63-20
Fax: 33-1-69-30-90-79

Germany - Dusseldorf
Tel: 49-2129-3766400

Germany - Munich
Tel: 49-89-627-144-0
Fax: 49-89-627-144-44

Germany - Pforzheim
Tel: 49-7231-424750

Italy - Milan
Tel: 39-0331-742611
Fax: 39-0331-466781

Italy - Venice
Tel: 39-049-7625286

Netherlands - Drunen
Tel: 31-416-690399
Fax: 31-416-690340

Poland - Warsaw
Tel: 48-22-3325737

Spain - Madrid
Tel: 34-91-708-08-90
Fax: 34-91-708-08-91

Sweden - Stockholm
Tel: 46-8-5090-4654

UK - Wokingham
Tel: 44-118-921-5800
Fax: 44-118-921-5820

03/25/14