chanhvinh.com

TC4431/TC4432

1.5A High-Speed 30V MOSFET Drivers

Features

- High Peak Output Current – 1.5 A
- Wide Input Supply Operating Range:
  - 4.5V to 30V
- High Capacitive Load Drive Capability:
  - 1000 pF in 25 nsec
- Short Delay Times – <78 nsec Typ.
- Low Supply Current:
  - With Logic '1' Input – 2.5 mA
  - With Logic '0' Input – 300 µA
- Low Output Impedance – 7 Ω
- Latch-Up Protected: Will Withstand >300 mA Reverse Current
- ESD Protected – 4 kV

Applications

- Small Motor Drive
- Power MOSFET Driver
- Driving Bipolar Transistors

General Description

The TC4431/TC4432 are 30V CMOS buffer/drivers suitable for use in high-side driver applications. They will not latch up under any conditions within their power and voltage ratings. They can accept, without damage or logic upset, up to 300 mA of reverse current (of either polarity) being forced back into their outputs. All terminals are fully protected against up to 4 kV of electrostatic discharge.

Under-voltage lockout circuitry forces the output to a 'low' state when the input supply voltage drops below 7V. For operation at lower voltages, disable the lockout and start-up circuit by grounding pin 3 (LOCK DIS); for all other situations, pin 3 (LOCK DIS) should be left floating. The under-voltage lockout and start-up circuit gives brown out protection when driving MOSFETS.

Package Type

8-Pin PDIP/SOIC/CERDIP

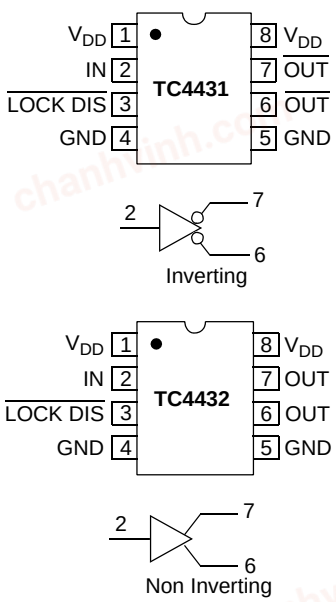

© 2007 Microchip Technology Inc.

chanhvinh.com

Functional Block Diagram

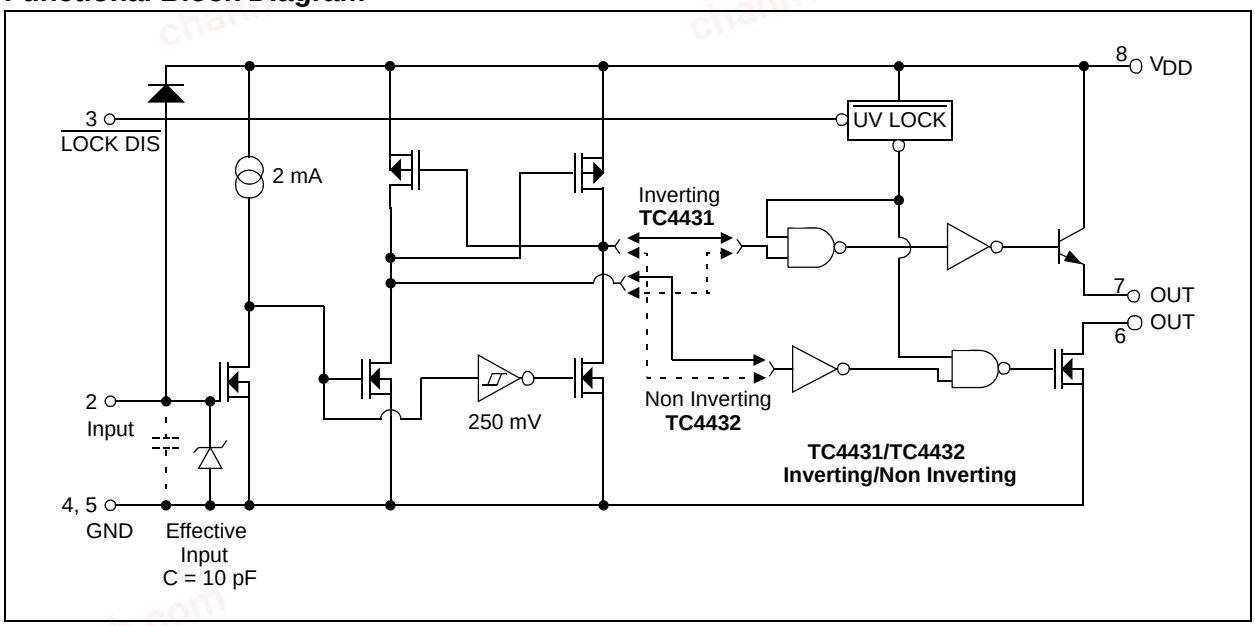

© 2007 Microchip Technology Inc.

chanhvinh.com

1.0 ELECTRICAL CHARACTERISTICS

Absolute Maximum Ratings†

Supply Voltage 36V
Input Voltage (**Note 1**)..... V_{DD} + 0.3V to GND
Package Power Dissipation ($T_A \leq 70°C$)
PDIP ..... 730 mW
CERDIP ..... 800 mW
SOIC ..... 470 mW
Maximum Junction Temperature, T_J ..... +150°C
Storage Temperature Range ..... -65°C to +150°C

† Stresses above those listed under "Absolute Maximum Ratings" may cause permanent damage to the device. These are stress ratings only and functional operation of the device at these or any other conditions above those indicated in the operation sections of the specifications is not implied. Exposure to Absolute Maximum Rating conditions for extended periods may affect device reliability.

DC CHARACTERISTICS

Electrical Specifications: Unless otherwise noted, T_A = +25ºC with 4.5V $\leq V_{DD} \leq$ 30V.

Parameters	Sym	Min	Typ	Max	Units	Conditions
Input						
Logic '1', High Input Voltage	V_{IH}	2.4	—	—	V	
Logic '0', Low Input Voltage	V_{IL}	—	—	0.8	V	
Input Current (**Note 1**)	I_{IN}	-1	—	1	µA	$0V \leq V_{IN} \leq 12V$
Output						
High Output Voltage	V_{OH}	V_{DD} – 1.0	V_{DD} – 0.8	—	V	I_{OUT} = 100 mA
Low Output Voltage	V_{OL}	—	—	0.025	V	
Output Resistance	R_O	—	7	10	Ω	I_{OUT} = 10 mA, V_{DD} = 30V
Peak Output Current	I_{PK}	— —	3.0 1.5	— —	A	Source: V_{DD} = 30V Sink: V_{DD} = 30V
Latch-Up Protection Withstand Reverse Current	I_{REV}	—	0.3	—	A	Duty cycle ≤ 2%, t ≤ 300 µsec
Switching Time (Note 2)						
Rise Time	t_R	—	25	40	ns	**Figure 4-1**
Fall Time	t_F	—	33	50	ns	**Figure 4-1**
Delay Time	t_{D1}	—	62	80	ns	**Figure 4-1**
Delay Time	t_{D2}	—	78	90	ns	**Figure 4-1**
Power Supply						
Power Supply Current	I_S	— —	2.5 0.3	4 0.4	mA	V_{IN} = 3V V_{IN} = 0V
Start-up Threshold	V_S	—	8.4	10	V	
Drop-out Threshold	V_{DO}	7	7.7	—	V	**Note 3**

Note 1: For inputs >12V, add a 1 kΩ resistor in series with the input. See **Section 2.0 "Typical Performance Curves"** for input current graph.

2: Switching times are ensured by design.

3: For operation below 7V, pin 3 ($\overline{\text{LOCK DIS}}$) should be tied to ground to disable the lockout and start-up circuit, otherwise, pin 3 **must** be left floating.

© 2007 Microchip Technology Inc.

chanhvinh.com

DC CHARACTERISTICS

Electrical Specifications: Unless otherwise noted, Over operating temperature range with 4.5V ≤ V_{DD} ≤ 30V.						
Parameters	**Sym**	**Min**	**Typ**	**Max**	**Units**	**Conditions**
Input						
Logic '1', High Input Voltage	V_{IH}	2.4	—	—	V	
Logic '0', Low Input Voltage	V_{IL}	—	—	0.8	V	
Input Current (**Note 1**)	I_{IN}	-10	—	10	µA	0V ≤ V_{IN} ≤ 12V
Output						
High Output Voltage	V_{OH}	V_{DD} – 1.2	—	—	V	I_{OUT} = 100 mA
Low Output Voltage	V_{OL}	—	—	0.025	V	
Output Resistance	R_O	—	—	12	Ω	I_{OUT} = 10 mA, V_{DD} = 30V
Switching Time (Note 2)						
Rise Time	t_R	—	—	60	ns	**Figure 4-1**
Fall Time	t_F	—	—	70	ns	**Figure 4-1**
Delay Time	t_{D1}	—	—	100	ns	**Figure 4-1**
Delay Time	t_{D2}	—	—	110	ns	**Figure 4-1**
Power Supply						
Power Supply Current	I_S	— —	— —	6 0.7	mA	V_{IN} = 3V V_{IN} = 0V
Start-up Threshold	V_S	—	8.4	10	V	
Drop-out Threshold	V_{DO}	7	7.7	—	V	**Note 3**

Note 1: For inputs >12V, add a 1 kΩ resistor in series with the input. See **Section 2.0 "Typical Performance Curves"** for input current graph.

2: Switching times are ensured by design.

3: For operation below 7V, pin 3 ($\overline{\text{LOCK DIS}}$) should be tied to ground to disable the lockout and start-up circuit, otherwise, pin 3 **must** be left floating.

TEMPERATURE CHARACTERISTICS

Electrical Specifications: Unless otherwise noted, all parameters apply with 4.5V ≤ V_{DD} ≤ 30V.						
Parameters	**Sym**	**Min**	**Typ**	**Max**	**Units**	**Conditions**
Temperature Ranges						
Specified Temperature Range (C)	T_A	0	—	+70	ºC	
Specified Temperature Range (E)	T_A	-40	—	+85	ºC	
Specified Temperature Range (V)	T_A	-40	—	+125	ºC	
Maximum Junction Temperature	T_J	—	—	+150	ºC	
Storage Temperature Range	T_A	-65	—	+150	ºC	
Package Thermal Resistances:						
Thermal Resistance, 8L-SOIC	θ_{JA}	—	155	—	ºC/W	
Thermal Resistance, 8L-PDIP	θ_{JA}	—	125	—	ºC/W	
Thermal Resistance, 8L-CERDIP	θ_{JA}	—	150	—	ºC/W	

© 2007 Microchip Technology Inc.

chanhvinh.com

2.0 TYPICAL PERFORMANCE CURVES

Note: The graphs and tables provided following this note are a statistical summary based on a limited number of samples and are provided for informational purposes only. The performance characteristics listed herein are not tested or guaranteed. In some graphs or tables, the data presented may be outside the specified operating range (e.g., outside specified power supply range) and therefore outside the warranted range.

Note: Unless otherwise indicated, T_A = +25ºC with 4.5V ≤ V_{DD} ≤ 30V.

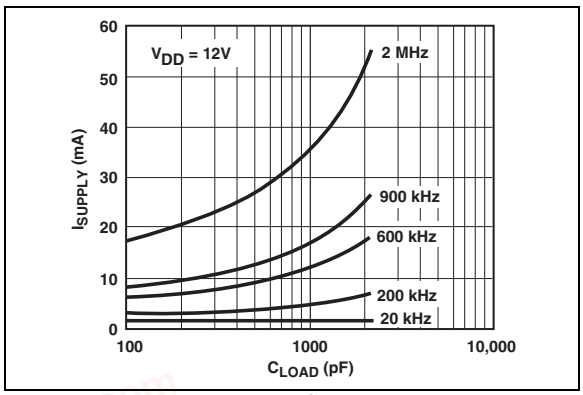

FIGURE 2-1: *Supply Current vs. Capacitive Load.*

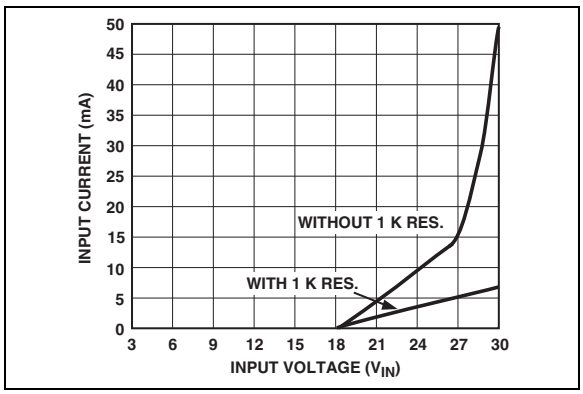

FIGURE 2-2: *Input Current vs. Input Voltage.*

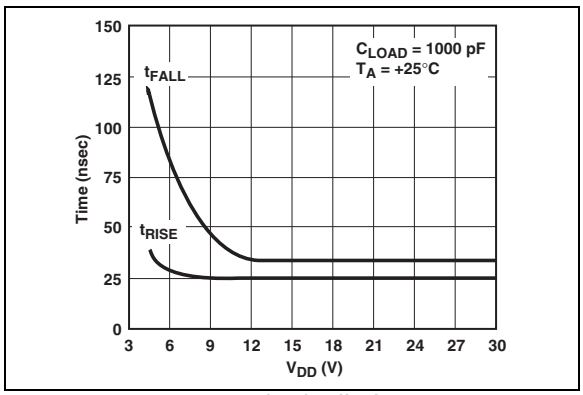

FIGURE 2-3: *Rise/Fall Time vs. V_{DD}.*

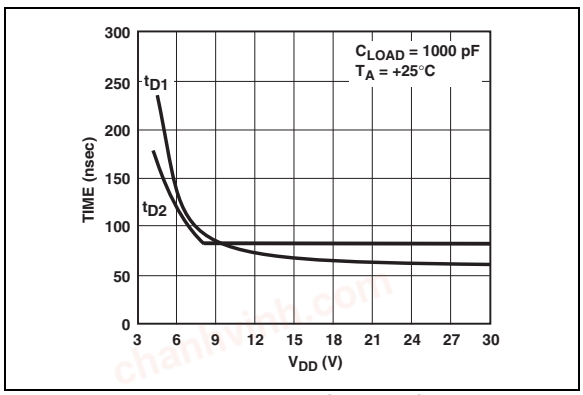

FIGURE 2-4: *t_{D1} and t_{D2} Delay vs. V_{DD}.*

chanhvinh.com

3.0 PIN DESCRIPTIONS

The descriptions of the pins are listed in Table 3-1.

TABLE 3-1: PIN FUNCTION TABLE

Pin No.	Symbol	Description
1	V_{DD}	Supply Input, 4.5V to 30V
2	IN	TTL/CMOS Compatible Input
3	$\overline{\text{LOCK DIS}}$	Input Pin, Enable/Disable for UV Lockout
4	GND	Ground
5	GND	Ground
6	OUT	Drive Output, Pull Down
7	OUT	Drive Output, Pull Up
8	V_{DD}	Supply Input, 4.5V to 30V

3.1 Supply Input (V_{DD})

The V_{DD} input is the bias supply input for the MOSFET driver and is rated for 4.5V to 30V with respect to the ground pins. The V_{DD} input should be bypassed to ground with a local ceramic capacitor. The value of this capacitor should be chosen based on the capacitive load that is being driven.

3.2 Control Input (IN)

The MOSFET driver input is a TTL/CMOS compatible input with 250 mV of hysteresis between the high and low threshold voltages. If an input signal level of greater than 12V is applied to the device, a series current limiting resistor is recommended.

3.3 Lockout Disable ($\overline{\text{LOCK DIS}}$)

The lockout pin enables/disables the undervoltage lockout feature of the device. If undervoltage lockout is desired (output is not enabled until the bias voltage reaches 8.4V (typical) on the rising edge and is disabled when the bias voltage reaches 7.7V (typical) on the falling edge), the lockout pin should be left floating. If operation below 7V is desired, the lockout pin should be tied to ground.

3.4 Ground (GND)

The ground pins are the return path for the bias current and for the high peak currents which discharge the load capacitor. Both ground pins should be used to ensure proper operation. The ground pins should be tied into a ground plane or have short traces to the bias supply source return.

3.5 Drive Output (OUT)

The TC4431/TC4432 devices have individual source and sink output pins. This feature can be used to adjust the rise and fall time independently by adding separate charge and discharge resistors external to the device. Pin 7 (source output) can source 3 A peak currents into capacitive loads and pin 6 (sink output) can sink 1.5 A peak currents from a capacitive load.

© 2007 Microchip Technology Inc.

chanhvinh.com

4.0 APPLICATIONS INFORMATION

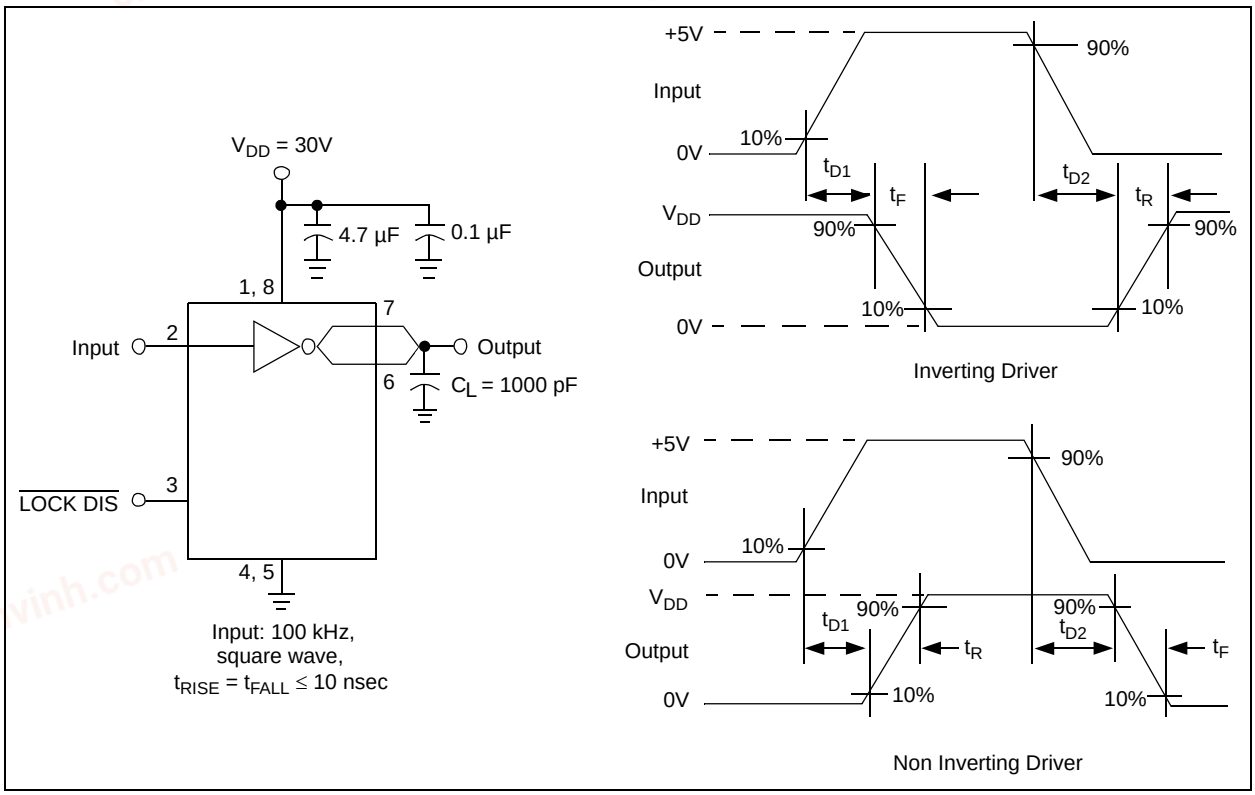

FIGURE 4-1: *Switching Time Test Circuit.*

chanhvinh.com

5.0 PACKAGING INFORMATION

5.1 Package Marking Information

8-Lead CERDIP (300 mil)

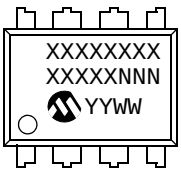

Example:

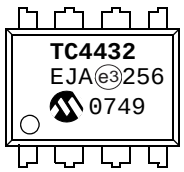

8-Lead PDIP (300 mil)

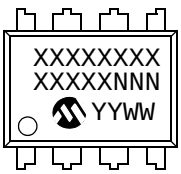

Example:

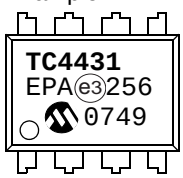

8-Lead SOIC (150 mil)

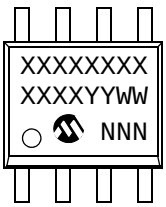

Example:

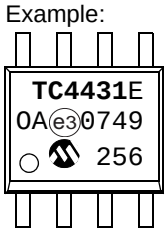

Legend:	XX...X	Customer-specific information
	Y	Year code (last digit of calendar year)
	YY	Year code (last 2 digits of calendar year)
	WW	Week code (week of January 1 is week ‘01’)
	NNN	Alphanumeric traceability code
	(e3)	Pb-free JEDEC designator for Matte Tin (Sn)
	*	This package is Pb-free. The Pb-free JEDEC designator ((e3)) can be found on the outer packaging for this package.

Note: In the event the full Microchip part number cannot be marked on one line, it will be carried over to the next line, thus limiting the number of available characters for customer-specific information.

© 2007 Microchip Technology Inc.

chanhvinh.com

8-Lead Ceramic Dual In-Line (JA) – .300" Body [CERDIP]

Note: For the most current package drawings, please see the Microchip Packaging Specification located at http://www.microchip.com/packaging

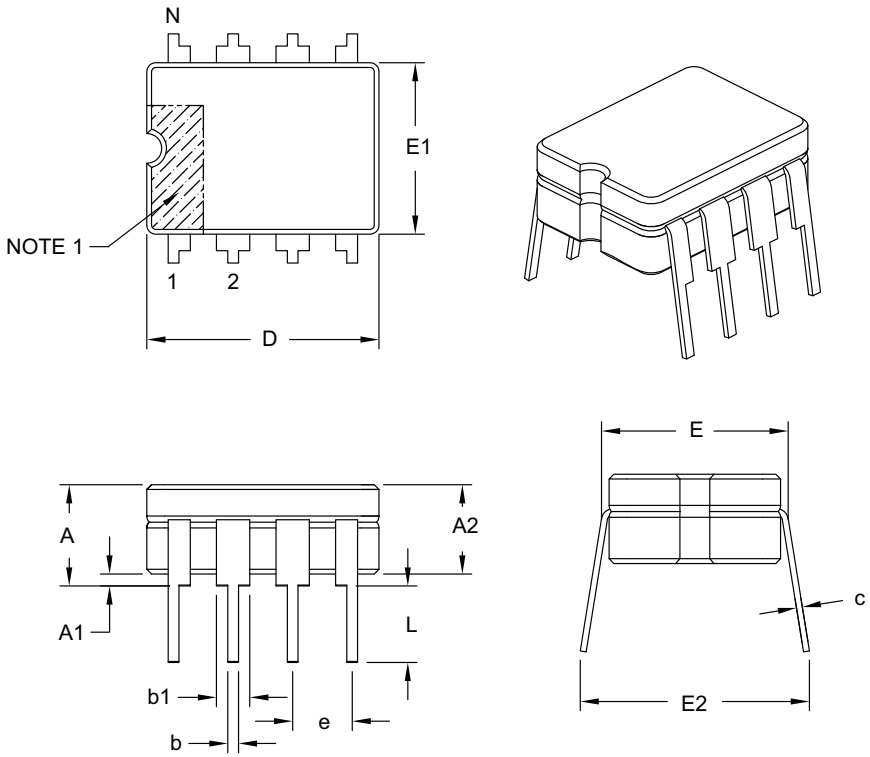

Units		INCHES		
Dimension Limits		MIN	NOM	MAX
Number of Pins	N		8	
Pitch	e		.100 BSC	
Top to Seating Plane	A	–	–	.200
Standoff §	A1	.015	–	–
Ceramic Package Height	A2	.140	–	.175
Shoulder to Shoulder Width	E	.290	–	.320
Ceramic Package Width	E1	.230	.248	.300
Overall Length	D	.370	.380	.400
Tip to Seating Plane	L	.125	–	.200
Lead Thickness	c	.008	–	.015
Upper Lead Width	b1	.045	–	.065
Lower Lead Width	b	.015	–	.023
Overall Row Spacing	E2	.314	–	.410

Notes:

1. Pin 1 visual index feature may vary, but must be located within the hatched area.
2. § Significant Characteristic.
3. Dimensioning and tolerancing per ASME Y14.5M.

BSC: Basic Dimension. Theoretically exact value shown without tolerances.

Microchip Technology Drawing C04-001B

chanhvinh.com

8-Lead Plastic Dual In-Line (P) – 300 mil Body [PDIP]

Note: For the most current package drawings, please see the Microchip Packaging Specification located at http://www.microchip.com/packaging

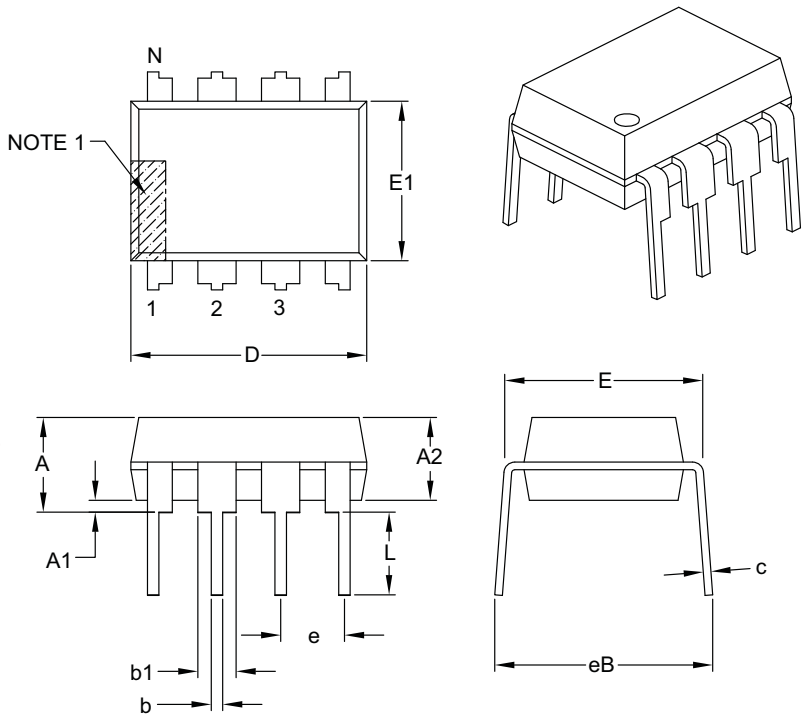

Units		INCHES		
Dimension Limits		MIN	NOM	MAX
Number of Pins	N		8	
Pitch	e		.100 BSC	
Top to Seating Plane	A	–	–	.210
Molded Package Thickness	A2	.115	.130	.195
Base to Seating Plane	A1	.015	–	–
Shoulder to Shoulder Width	E	.290	.310	.325
Molded Package Width	E1	.240	.250	.280
Overall Length	D	.348	.365	.400
Tip to Seating Plane	L	.115	.130	.150
Lead Thickness	c	.008	.010	.015
Upper Lead Width	b1	.040	.060	.070
Lower Lead Width	b	.014	.018	.022
Overall Row Spacing §	eB	–	–	.430

Notes:

1. Pin 1 visual index feature may vary, but must be located with the hatched area.
2. § Significant Characteristic.
3. Dimensions D and E1 do not include mold flash or protrusions. Mold flash or protrusions shall not exceed .010" per side.
4. Dimensioning and tolerancing per ASME Y14.5M.

   BSC: Basic Dimension. Theoretically exact value shown without tolerances.

Microchip Technology Drawing C04-018B

© 2007 Microchip Technology Inc.

chanhvinh.com

8-Lead Plastic Small Outline (SN) – Narrow, 3.90 mm Body [SOIC]

Note: For the most current package drawings, please see the Microchip Packaging Specification located at http://www.microchip.com/packaging

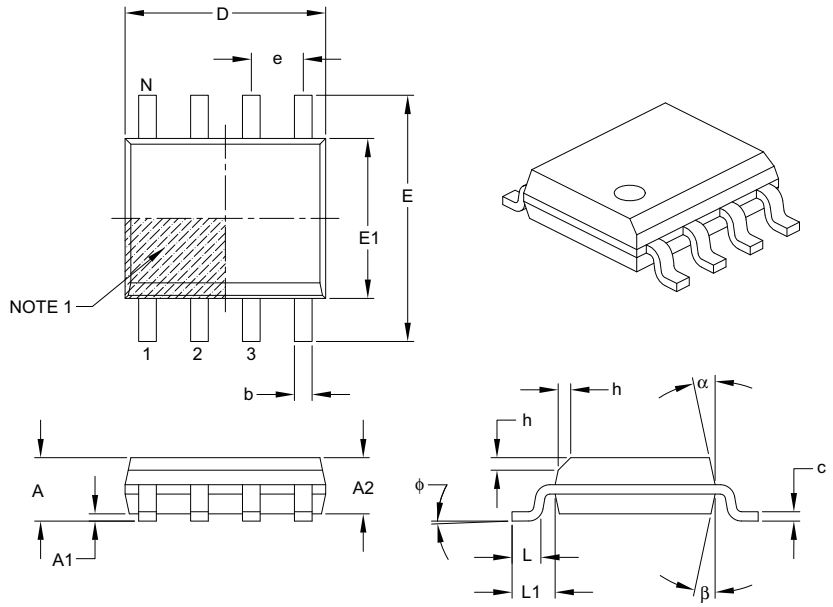

Units		MILLIMETERS		
Dimension Limits		MIN	NOM	MAX
Number of Pins	N		8	
Pitch	e		1.27 BSC	
Overall Height	A	–	–	1.75
Molded Package Thickness	A2	1.25	–	–
Standoff §	A1	0.10	–	0.25
Overall Width	E		6.00 BSC	
Molded Package Width	E1		3.90 BSC	
Overall Length	D		4.90 BSC	
Chamfer (optional)	h	0.25	–	0.50
Foot Length	L	0.40	–	1.27
Footprint	L1		1.04 REF	
Foot Angle	ϕ	0°	–	8°
Lead Thickness	c	0.17	–	0.25
Lead Width	b	0.31	–	0.51
Mold Draft Angle Top	α	5°	–	15°
Mold Draft Angle Bottom	β	5°	–	15°

Notes:

1. Pin 1 visual index feature may vary, but must be located within the hatched area.
2. § Significant Characteristic.
3. Dimensions D and E1 do not include mold flash or protrusions. Mold flash or protrusions shall not exceed 0.15 mm per side.
4. Dimensioning and tolerancing per ASME Y14.5M.

   BSC: Basic Dimension. Theoretically exact value shown without tolerances.

   REF: Reference Dimension, usually without tolerance, for information purposes only.

Microchip Technology Drawing C04-057B

© 2007 Microchip Technology Inc.

chanhvinh.com

8-Lead Plastic Small Outline (SN) – Narrow, 3.90 mm Body [SOIC]

Note: For the most current package drawings, please see the Microchip Packaging Specification located at http://www.microchip.com/packaging

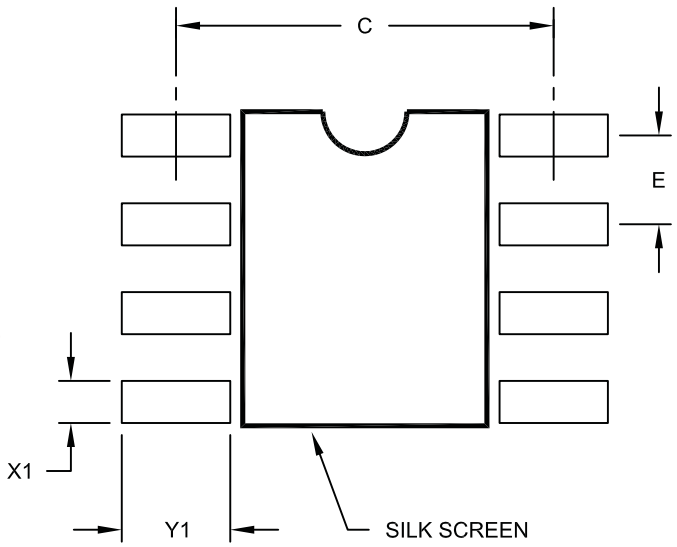

RECOMMENDED LAND PATTERN

Units		MILLIMETERS		
Dimension Limits		MIN	NOM	MAX
Contact Pitch	E		1.27 BSC	
Contact Pad Spacing	C		5.40	
Contact Pad Width (X8)	X1			0.60
Contact Pad Length (X8)	Y1			1.55

Notes:

1. Dimensioning and tolerancing per ASME Y14.5M

BSC: Basic Dimension. Theoretically exact value shown without tolerances.

Microchip Technology Drawing No. C04-2057A

© 2007 Microchip Technology Inc.

chanhvinh.com

APPENDIX A: REVISION HISTORY

Revision D (December 2007)

The following is the list of modifications:

1. **Section 1.0 “Electrical Characteristics”**: Added V temperature information to Temperature Characteristics table.
2. Added Revision History.
3. Added V temperature range to Product identification System page.

Revision C (May 2003)

The following is the list of modifications:

1. Undocumented changes

Revision B (May 2002)

The following is the list of modifications:

1. Undocumented changes

Revision A (April 2002)

- Original Release of this Document.

chanhvinh.com

chanhvinh.com

NOTES:

chanhvinh.com

© 2007 Microchip Technology Inc.

chanhvinh.com

PRODUCT IDENTIFICATION SYSTEM

To order or obtain information, e.g., on pricing or delivery, refer to the factory or the listed sales office.

PART NO.	X	/XX
Device	Temperature Range	Package

Device:	TC4431:	1.5A High-Speed 30V MOSFET Driver, Inverting
	TC4432:	1.5A High-Speed 30V MOSFET Driver, Non Inverting
Temperature Range:	C =	0°C to +70°C
	E =	-40°C to +85°C
	V =	-40°C to +125°C
Package:	JA =	Ceramic Dual In-line (300 mil Body), 8-lead *
	OA =	Plastic SOIC, (150 mil Body), 8-lead
	OA713 =	Plastic SOIC, (150 mil Body), 8-lead (Tape and Reel)
	PA =	Plastic DIP (300 mil Body), 8-lead* *

* Offered in E-temp range only.
* * The only package offered in the V temp range.

Examples:

a) TC4431COA: 1.5A MOSFET driver, SOIC package, 0°C to +70°C.
b) TC4431EJA: 1.5A MOSFET driver, CERDIP package, -40ºC to +85ºC.
c) TC4431VPA: 1.5A MOSFET driver, PDIP package, -40°C to +125°C.

a) TC4432CPA: 1.5A MOSFET driver, PDIP package, 0°C to +70°C.
b) TC4432EPA: 1.5A MOSFET driver, PDIP package, -40°C to +85°C.
c) TC4432VOA713: Tape and Reel, 1.5A MOSFET driver, SOIC package, -40°C to +125°C.

chanhvinh.com

chanhvinh.com

NOTES:

chanhvinh.com

© 2007 Microchip Technology Inc.

chanhvinh.com

Note the following details of the code protection feature on Microchip devices:

- Microchip products meet the specification contained in their particular Microchip Data Sheet.
- Microchip believes that its family of products is one of the most secure families of its kind on the market today, when used in the intended manner and under normal conditions.
- There are dishonest and possibly illegal methods used to breach the code protection feature. All of these methods, to our knowledge, require using the Microchip products in a manner outside the operating specifications contained in Microchip's Data Sheets. Most likely, the person doing so is engaged in theft of intellectual property.
- Microchip is willing to work with the customer who is concerned about the integrity of their code.
- Neither Microchip nor any other semiconductor manufacturer can guarantee the security of their code. Code protection does not mean that we are guaranteeing the product as "unbreakable."

Code protection is constantly evolving. We at Microchip are committed to continuously improving the code protection features of our products. Attempts to break Microchip's code protection feature may be a violation of the Digital Millennium Copyright Act. If such acts allow unauthorized access to your software or other copyrighted work, you may have a right to sue for relief under that Act.

Information contained in this publication regarding device applications and the like is provided only for your convenience and may be superseded by updates. It is your responsibility to ensure that your application meets with your specifications. MICROCHIP MAKES NO REPRESENTATIONS OR WARRANTIES OF ANY KIND WHETHER EXPRESS OR IMPLIED, WRITTEN OR ORAL, STATUTORY OR OTHERWISE, RELATED TO THE INFORMATION, INCLUDING BUT NOT LIMITED TO ITS CONDITION, QUALITY, PERFORMANCE, MERCHANTABILITY OR FITNESS FOR PURPOSE**.** Microchip disclaims all liability arising from this information and its use. Use of Microchip devices in life support and/or safety applications is entirely at the buyer's risk, and the buyer agrees to defend, indemnify and hold harmless Microchip from any and all damages, claims, suits, or expenses resulting from such use. No licenses are conveyed, implicitly or otherwise, under any Microchip intellectual property rights.

Trademarks

The Microchip name and logo, the Microchip logo, Accuron, dsPIC, KEELOQ, KEELOQ logo, microID, MPLAB, PIC, PICmicro, PICSTART, PRO MATE, rfPIC and SmartShunt are registered trademarks of Microchip Technology Incorporated in the U.S.A. and other countries.

AmpLab, FilterLab, Linear Active Thermistor, Migratable Memory, MXDEV, MXLAB, SEEVAL, SmartSensor and The Embedded Control Solutions Company are registered trademarks of Microchip Technology Incorporated in the U.S.A.

Analog-for-the-Digital Age, Application Maestro, CodeGuard, dsPICDEM, dsPICDEM.net, dsPICworks, dsSPEAK, ECAN, ECONOMONITOR, FanSense, FlexROM, fuzzyLAB, In-Circuit Serial Programming, ICSP, ICEPIC, Mindi, MiWi, MPASM, MPLAB Certified logo, MPLIB, MPLINK, PICkit, PICDEM, PICDEM.net, PICLAB, PICtail, PowerCal, PowerInfo, PowerMate, PowerTool, REAL ICE, rfLAB, Select Mode, Smart Serial, SmartTel, Total Endurance, UNI/O, WiperLock and ZENA are trademarks of Microchip Technology Incorporated in the U.S.A. and other countries.

SQTP is a service mark of Microchip Technology Incorporated in the U.S.A.

All other trademarks mentioned herein are property of their respective companies.

© 2007, Microchip Technology Incorporated, Printed in the U.S.A., All Rights Reserved.

Printed on recycled paper.

QUALITY MANAGEMENT SYSTEM
CERTIFIED BY DNV
ISO/TS 16949:2002

Microchip received ISO/TS-16949:2002 certification for its worldwide headquarters, design and wafer fabrication facilities in Chandler and Tempe, Arizona; Gresham, Oregon and design centers in California and India. The Company's quality system processes and procedures are for its PIC® MCUs and dsPIC® DSCs, KEELOQ® code hopping devices, Serial EEPROMs, microperipherals, nonvolatile memory and analog products. In addition, Microchip's quality system for the design and manufacture of development systems is ISO 9001:2000 certified.

chanhvinh.com

WORLDWIDE SALES AND SERVICE

AMERICAS

Corporate Office
2355 West Chandler Blvd.
Chandler, AZ 85224-6199
Tel: 480-792-7200
Fax: 480-792-7277
Technical Support:
http://support.microchip.com
Web Address:
www.microchip.com

Atlanta
Duluth, GA
Tel: 678-957-9614
Fax: 678-957-1455

Boston
Westborough, MA
Tel: 774-760-0087
Fax: 774-760-0088

Chicago
Itasca, IL
Tel: 630-285-0071
Fax: 630-285-0075

Dallas
Addison, TX
Tel: 972-818-7423
Fax: 972-818-2924

Detroit
Farmington Hills, MI
Tel: 248-538-2250
Fax: 248-538-2260

Kokomo
Kokomo, IN
Tel: 765-864-8360
Fax: 765-864-8387

Los Angeles
Mission Viejo, CA
Tel: 949-462-9523
Fax: 949-462-9608

Santa Clara
Santa Clara, CA
Tel: 408-961-6444
Fax: 408-961-6445

Toronto
Mississauga, Ontario,
Canada
Tel: 905-673-0699
Fax: 905-673-6509

ASIA/PACIFIC

Asia Pacific Office
Suites 3707-14, 37th Floor
Tower 6, The Gateway
Harbour City, Kowloon
Hong Kong
Tel: 852-2401-1200
Fax: 852-2401-3431

Australia - Sydney
Tel: 61-2-9868-6733
Fax: 61-2-9868-6755

China - Beijing
Tel: 86-10-8528-2100
Fax: 86-10-8528-2104

China - Chengdu
Tel: 86-28-8665-5511
Fax: 86-28-8665-7889

China - Fuzhou
Tel: 86-591-8750-3506
Fax: 86-591-8750-3521

China - Hong Kong SAR
Tel: 852-2401-1200
Fax: 852-2401-3431

China - Nanjing
Tel: 86-25-8473-2460
Fax: 86-25-8473-2470

China - Qingdao
Tel: 86-532-8502-7355
Fax: 86-532-8502-7205

China - Shanghai
Tel: 86-21-5407-5533
Fax: 86-21-5407-5066

China - Shenyang
Tel: 86-24-2334-2829
Fax: 86-24-2334-2393

China - Shenzhen
Tel: 86-755-8203-2660
Fax: 86-755-8203-1760

China - Shunde
Tel: 86-757-2839-5507
Fax: 86-757-2839-5571

China - Wuhan
Tel: 86-27-5980-5300
Fax: 86-27-5980-5118

China - Xian
Tel: 86-29-8833-7252
Fax: 86-29-8833-7256

ASIA/PACIFIC

India - Bangalore
Tel: 91-80-4182-8400
Fax: 91-80-4182-8422

India - New Delhi
Tel: 91-11-4160-8631
Fax: 91-11-4160-8632

India - Pune
Tel: 91-20-2566-1512
Fax: 91-20-2566-1513

Japan - Yokohama
Tel: 81-45-471- 6166
Fax: 81-45-471-6122

Korea - Daegu
Tel: 82-53-744-4301
Fax: 82-53-744-4302

Korea - Seoul
Tel: 82-2-554-7200
Fax: 82-2-558-5932 or
82-2-558-5934

Malaysia - Kuala Lumpur
Tel: 60-3-6201-9857
Fax: 60-3-6201-9859

Malaysia - Penang
Tel: 60-4-227-8870
Fax: 60-4-227-4068

Philippines - Manila
Tel: 63-2-634-9065
Fax: 63-2-634-9069

Singapore
Tel: 65-6334-8870
Fax: 65-6334-8850

Taiwan - Hsin Chu
Tel: 886-3-572-9526
Fax: 886-3-572-6459

Taiwan - Kaohsiung
Tel: 886-7-536-4818
Fax: 886-7-536-4803

Taiwan - Taipei
Tel: 886-2-2500-6610
Fax: 886-2-2508-0102

Thailand - Bangkok
Tel: 66-2-694-1351
Fax: 66-2-694-1350

EUROPE

Austria - Wels
Tel: 43-7242-2244-39
Fax: 43-7242-2244-393

Denmark - Copenhagen
Tel: 45-4450-2828
Fax: 45-4485-2829

France - Paris
Tel: 33-1-69-53-63-20
Fax: 33-1-69-30-90-79

Germany - Munich
Tel: 49-89-627-144-0
Fax: 49-89-627-144-44

Italy - Milan
Tel: 39-0331-742611
Fax: 39-0331-466781

Netherlands - Drunen
Tel: 31-416-690399
Fax: 31-416-690340

Spain - Madrid
Tel: 34-91-708-08-90
Fax: 34-91-708-08-91

UK - Wokingham
Tel: 44-118-921-5869
Fax: 44-118-921-5820

10/05/07

© 2007 Microchip Technology Inc.