chanhvinh.com

# PIC16(L)F1704/8

## 14/20-Pin 8-Bit Advanced Analog Flash Microcontrollers

### High-Performance RISC CPU:

- C Compiler Optimized Architecture
- Only 49 Instructions
- Up to 14 Kbytes Linear Program Memory Addressing
- Operating Speed:
  - DC – 32 MHz
  - DC – 125 ns instruction cycle
- Interrupt Capability with Automatic Context Saving
- 16-Level Deep Hardware Stack with Optional Overflow/Underflow Reset
- Direct, Indirect and Relative Addressing modes:
  - Two full 16-bit File Select Registers (FSRs)
  - FSRs can read program and data memory

### Flexible Oscillator Structure:

- 16 MHz Internal Oscillator Block:
  - Accurate to ±1%, typical
  - Software selectable frequency range from 16 MHz to 250 kHz
  - PLL multiplier to 32 MHz
- 31 kHz Low-Power Internal Oscillator
- External Oscillator Block with:
  - Three crystal/resonator modes up to 20 MHz
  - Three external clock modes up to 20 MHz
- Fail-Safe Clock Monitor:
  - Allows for safe shutdown if peripheral clock stops
- Two-Speed Oscillator Start-up
- Oscillator Start-up Timer (OST)

### Special Microcontroller Features:

- Operating Voltage Range:
  - 1.8V-3.6V (PIC16LF1704/8)
  - 2.3V-5.5V (PIC16F1704/8)
- Temperature Range:
  - Industrial: -40°C to 85°C
  - Extended: -40°C to 125°C
- Power-on Reset (POR)
- Low Power Brown-Out Reset (LPBOR)
- Extended Watch-Dog Timer (WDT):
  - Programmable period from 1 ms to 256s
- Programmable Code Protection
- In-Circuit Serial Programming™ (ICSP™) via Two Pins
- In-Circuit Debug (ICD) via Two Pins
- Enhanced Low-Voltage Programming (LVP)
- Power-Saving Sleep mode

### Low-Power Features (PIC16LF1704/8):

- Standby Current:
  - 30 nA @ 1.8V, typical
- Operating Current:
  - 35 μA/MHz, typical
- Low-Power Watchdog Timer Current:
  - 300 nA @ 1.8V, typical

### Digital Peripheral Features:

- Up to 17 I/O Pins and 1 Input-only Pin:
  - High current sink/source for LED drivers
  - Individually programmable weak pull-ups
  - Interrupt-on-change pin option with edge selectable option
- Timer0: 8-Bit Timer/Counter with 8-Bit Programmable Prescaler
- Enhanced Timer1:
  - 16-bit timer/counter with prescaler
  - External Gate Input mode
  - Dedicated low-power 32 kHz oscillator driver
- Timer2:
  - Up to 3 (TMR2/4/6)
  - 8-Bit Timer/Counter
  - 8-Bit Period Register
  - Prescaler and Postscaler
- Capture, Compare, PWM (CCP) Module
- Master Synchronous Serial Port (SSP) with SPI and $I^2C$™ with:
  - 7-bit address masking
  - SMBus/PMBus™ compatibility
- Enhanced Universal Synchronous Asynchronous Receiver Transmitter (EUSART):
  - RS-232, RS-485 and LIN compatible
  - Auto-Baud Detect
  - Auto-wake-up on Start
- Complementary Output Generator (COG):
  - Push-Pull, Full Bridge, and Steering modes
  - Dedicated Rise/Fall Input Triggers
  - Dedicated Deadtime Delay Counters
  - Dedicated Phase Delay Counters
  - Dedicated Blanking Delay Counters
  - Concurrent Auto-Shutdown Selection
- Two Pulse Width Modulation (PWM) modules:
  - 10-bit Duty-Cycle Control
- Three Configurable Logic Cell (CLC) modules:
  - Generate a selected function of up to 4 inputs
  - Combinational and State Logic
  - External or Internal input/output pins
  - Operation in Sleep

© 2013 Microchip Technology Inc.

chanhvinh.com



## Digital Peripheral Features (Continued):

- Peripheral Pin Select (PPS):
  - Digital outputs mapped to any GPIO pin
  - Digital inputs from any GPIO pin
  - CLC input multiplexing

## Analog Peripheral Features:

- Operational Amplifiers:
  - Up to two Configurable Op Amps
  - Selectable internal and external channels
  - High/Low selectable Gain Bandwidth Product
- Two High-Speed Comparators:
  - 60 ns response time
  - Low-power/High-power mode
  - Comparator outputs externally accessible
  - Software hysteresis enable
- Analog-to-Digital Converter (ADC) module
  - 10-bit resolution, 12 channels
  - Auto conversion start capability
  - Conversion available during Sleep
- 8-Bit Digital-to-Analog Converter (DAC):
  - Output available externally
  - Positive and negative reference selection
  - Internal connections to comparators, op amps, Fixed Voltage Reference (FVR) and ADC
- Zero-Cross Detection Circuit:
  - Constant Voltage Output
  - Current Source/Sink
  - Interrupt on Edge Detect
- Voltage Reference module:
  - Fixed Voltage Reference (FVR) with 1.024V, 2.048V and 4.096V output levels

## PIC16(L)F170x Family Types

| Device | Data Sheet Index | Program Memory Flash (words) | Data SRAM (bytes) | I/O's(2) | 10-bit ADC (ch) | 8-bit DAC | High-Speed/ Comparators | Op Amp | Zero Cross | Timers (8/16-bit) | CCP | PWM | COG | EUSART | MSSP ($I^2C$™/SPI) | CLC | PPS | Debug(1) | XLP |
|---|---|---|---|---|---|---|---|---|---|---|---|---|---|---|---|---|---|---|---|
| PIC16(L)F1703 | (3) | 2048 | 256 | 12 | 8 | 0 | 0 | 2 | 1 | 2/1 | 2 | 0 | 0 | 0 | 1 | 0 | Y | I/E | Y |
| PIC16(L)F1704 | (1) | 4096 | 512 | 12 | 8 | 1 | 2 | 2 | 1 | 4/1 | 2 | 2 | 1 | 1 | 1 | 3 | Y | I/E | Y |
| PIC16(L)F1705 | (2) | 8192 | 1024 | 12 | 8 | 1 | 2 | 2 | 1 | 4/1 | 2 | 2 | 1 | 1 | 1 | 3 | Y | I/E | Y |
| PIC16(L)F1707 | (3) | 2048 | 256 | 18 | 12 | 0 | 0 | 2 | 1 | 2/1 | 2 | 0 | 0 | 0 | 1 | 0 | Y | I/E | Y |
| PIC16(L)F1708 | (1) | 4096 | 512 | 18 | 12 | 1 | 2 | 2 | 1 | 4/1 | 2 | 2 | 1 | 1 | 1 | 3 | Y | I/E | Y |
| PIC16(L)F1709 | (2) | 8192 | 1024 | 18 | 12 | 1 | 2 | 2 | 1 | 4/1 | 2 | 2 | 1 | 1 | 1 | 3 | Y | I/E | Y |

**Note 1:** Debugging Methods: (I) – Integrated on Chip; (H) – using Debug Header; E – using Emulation Header.
**2:** One pin is input-only.

**Data Sheet Index:** (Unshaded devices are described in this document.)

**1:** DS40001715 PIC16(L)F1704/8 Data Sheet, 14/20-Pin Flash, 8-bit Microcontrollers.
**2:** Future Release PIC16(L)F1705/9 Data Sheet, 14/20-Pin Flash, 8-bit Microcontrollers.
**3:** Future Release PIC16(L)F1703/7 Data Sheet, 14/20-Pin Flash, 8-bit Microcontrollers.

**Note:** For other small form-factor package availability and marking information, please visit **http://www.microchip.com/packaging** or contact your local sales office.


© 2013 Microchip Technology Inc.

chanhvinh.com



## Pin Diagrams

**FIGURE 1: 14-PIN DIAGRAM FOR PIC16(L)F1704**

**PDIP, SOIC, TSSOP**

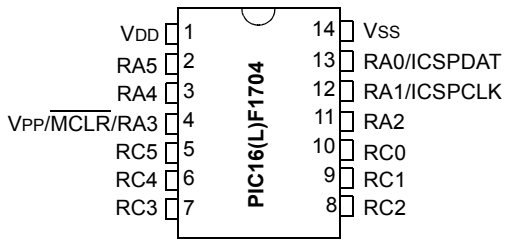


**FIGURE 2: 16-PIN PACKAGE DIAGRAM FOR PIC16(L)F1704**

**QFN**

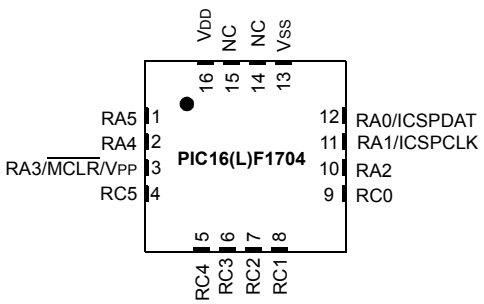

chanhvinh.com



**FIGURE 3: 20-PIN PACKAGE DIAGRAM FOR PIC16(L)F1708**

**PDIP, SOIC, SSOP**

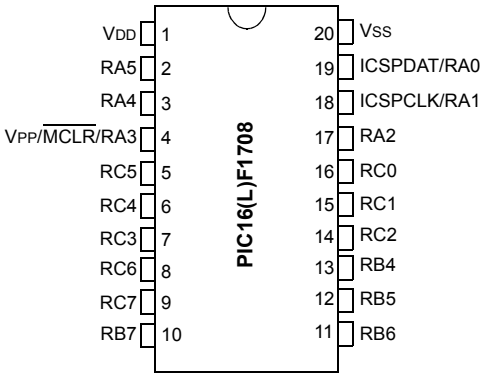


**FIGURE 4: 20-PIN PACKAGE DIAGRAM FOR PIC16(L)F1708**

**QFN**

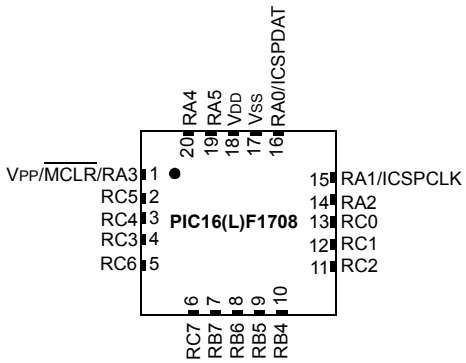


 © 2013 Microchip Technology Inc.

chanhvinh.com

**TABLE 1: 14/16-PIN ALLOCATION TABLE (PIC16(L)F1704)**

| I/O(2) | PDIP/SOIC/SSOP | QFN | ADC | Reference | Comparator | Op Amp | DAC | Zero Cross | Timers | CCP | PWM | COG | MSSP | EUSART | CLC | Interrupt | Pull-up | Basic |
|---|---|---|---|---|---|---|---|---|---|---|---|---|---|---|---|---|---|---|
| RA0 | 13 | 12 | AN0 | VREF- | C1IN+ | — | DAC1OUT | — | — | — | | — | — | — | — | IOC | Y | ICSPDAT |
| RA1 | 12 | 11 | AN1 | VREF+ | C1IN0-<br>C2IN0- | — | — | — | — | — | | — | — | — | — | IOC | Y | ICSPCLK |
| RA2 | 11 | 10 | AN2 | — | — | — | DAC1OUT2 | ZCD | T0CKI(1) | — | | COGIN(1) | — | — | — | INT(1)<br>IOC | Y | — |
| RA3 | 4 | 3 | — | — | — | — | — | — | — | — | | — | — | — | — | IOC | Y | $\overline{\text{MCLR}}$<br>VPP |
| RA4 | 3 | 2 | AN3 | — | — | — | — | — | T1G(1)<br>SOSCO | — | | — | — | — | — | IOC | Y | CLKOUT<br>OSC2 |
| RA5 | 2 | 1 | — | — | — | — | — | — | T1CKI(1)<br>SOSCI | — | | — | — | — | CLCIN3(1) | IOC | Y | CLKIN<br>OSC1 |
| RC0 | 10 | 9 | AN4 | — | C2IN+ | OPA1IN+ | — | — | — | — | | — | SCK(1)<br>SCL(3) | — | — | IOC | Y | — |
| RC1 | 9 | 8 | AN5 | — | C1IN1-<br>C2IN1- | OPA1IN- | — | — | — | — | | — | SDI(1)<br>SDA(3) | — | CLCIN2(1) | IOC | Y | — |
| RC2 | 8 | 7 | AN6 | — | C1IN2-<br>C2IN2- | OPA1OUT | — | — | — | — | | — | — | — | — | IOC | Y | — |
| RC3 | 7 | 6 | AN7 | — | C1IN3-<br>C2IN3- | OPA2OUT | — | — | — | CCP2(1) | | — | $\overline{\text{SS}}$(1) | — | CLCIN0(1) | IOC | Y | — |
| RC4 | 6 | 5 | — | — | — | OPA2IN- | — | — | — | — | | — | — | CK(1) | CLCIN1(1) | IOC | Y | — |
| RC5 | 5 | 4 | — | — | — | OPA2IN+ | — | — | — | CCP1(1) | | — | — | RX(1,3) | — | IOC | Y | — |
| VDD | 1 | 16 | — | — | — | — | — | — | — | — | | — | — | — | — | — | — | VDD |
| VSS | 14 | 13 | — | — | — | — | — | — | — | — | | — | — | — | — | — | — | VSS |
| OUT(2) | — | — | — | — | C1OUT | — | — | — | — | CPP1 | PWM3OUT | COGA | SDA(3) | CK | CLC1OUT | — | — | — |
| | — | — | — | — | C2OUT | — | — | — | — | CPP2 | PWM4OUT | COGB | SCL(3) | DT(3) | CLC2OUT | — | — | — |
| | — | — | — | — | — | — | — | — | — | — | — | COGC | SDO | TX | CLC3OUT | — | — | — |
| | — | — | — | — | — | — | — | — | — | — | — | COGD | SCK | — | — | — | — | — |

**Note 1:** Default peripheral input. Input can be moved to any other pin with the PPS input selection registers. See Register 12-1.
**2:** All pin outputs default to PORT latch data. Any pin can be selected as a digital peripheral output with the PPS output selection registers. See Register 12-3.
**3:** These peripheral functions are bidirectional. The output pin selections must be the same as the input pin selections.

© 2013 Microchip Technology Inc.

chanhvinh.com



**TABLE 2: 20-PIN ALLOCATION TABLE (PIC16(L)F1708)**

| I/O(2) | PDIP/SOIC/SSOP | QFN | ADC | Reference | Comparator | Op Amp | DAC | Zero Cross | Timers | CCP | PWM | COG | MSSP | EUSART | CLC | Interrupt | Pull-up | Basic |
|---|---|---|---|---|---|---|---|---|---|---|---|---|---|---|---|---|---|---|
| RA0 | 19 | 16 | AN0 | VREF- | C1IN+ | — | DAC1OUT | — | — | — | — | — | — | — | — | IOC | Y | ICSPDAT |
| RA1 | 18 | 15 | AN1 | VREF+ | C1IN0-<br>C2IN0- | — | — | — | — | — | — | — | — | — | — | IOC | Y | ICSPCLK |
| RA2 | 17 | 14 | AN2 | — | — | — | DAC1OUT2 | ZCD | T0CKI(1) | — | — | COGIN(1) | — | — | — | INT(1)<br>IOC | Y | — |
| RA3 | 4 | 1 | — | — | — | — | — | — | — | — | — | — | — | — | — | IOC | Y | $\overline{\text{MCLR}}$<br>VPP |
| RA4 | 3 | 20 | AN3 | — | — | — | — | — | T1G(1)<br>SOSCO | — | — | — | — | — | — | IOC | Y | CLKOUT<br>OSC2 |
| RA5 | 2 | 19 | — | — | — | — | — | — | T1CKI<br>SOSCI | — | — | — | — | — | CLCIN3(1) | IOC | Y | CLKIN<br>OSC1 |
| RB4 | 13 | 10 | AN10 | — | — | OPA1IN- | — | — | — | — | — | — | SCK(1)<br>SDA(3) | — | — | IOC | Y | — |
| RB5 | 12 | 9 | AN11 | — | — | OPA1IN+ | — | — | — | — | — | — | — | RX(1,3) | | IOC | Y | — |
| RB6 | 11 | 8 | — | — | — | — | — | — | — | — | — | — | SDI(1)<br>SCL(3) | — | — | IOC | Y | — |
| RB7 | 10 | 7 | — | — | — | — | — | — | — | — | — | — | — | CK(1) | — | IOC | Y | — |
| RC0 | 16 | 13 | AN4 | — | C2IN+ | — | — | — | — | — | — | — | — | — | — | IOC | Y | — |
| RC1 | 15 | 12 | AN5 | — | C1IN1-<br>C2IN1- | — | — | — | — | — | — | — | — | — | CLCIN2(1) | IOC | Y | — |
| RC2 | 14 | 11 | AN6 | — | C1IN2-<br>C2IN2- | OPA1OUT | — | — | — | — | — | — | — | — | — | IOC | Y | — |
| RC3 | 7 | 4 | AN7 | — | C1IN3-<br>C2IN3- | OPA2OUT | — | — | — | CCP2(1) | — | — | — | — | CLCIN0(1) | IOC | Y | — |
| RC4 | 6 | 3 | — | — | — | — | — | — | — | — | — | — | — | — | CLCIN1(1) | IOC | Y | — |
| RC5 | 5 | 2 | — | — | — | — | — | — | — | CCP1(1) | — | — | — | — | — | IOC | Y | — |
| RC6 | 8 | 5 | AN8 | — | — | OPA2IN- | — | — | — | — | — | — | $\overline{\text{SS}}$(1) | — | — | IOC | Y | — |
| RC7 | 9 | 6 | AN9 | — | — | OPA2IN+ | — | — | — | — | — | — | — | — | — | IOC | Y | — |
| VDD | 1 | 18 | — | — | — | — | — | — | — | — | — | — | — | — | — | — | — | VDD |
| VSS | 20 | 17 | — | — | — | — | — | — | — | — | — | — | — | — | — | — | — | VSS |
| OUT(2) | — | — | — | — | C1OUT | — | — | — | — | CPP1 | PWM3OUT | COGA | SDA(3) | CK | CLC1OUT | — | — | — |
| | — | — | — | — | C2OUT | — | — | — | — | CPP2 | PWM4OUT | COGB | SCL(3) | DT(3) | CLC2OUT | — | — | — |
| | — | — | — | — | — | — | — | — | — | — | — | COGC | SDO | TX | CLC3OUT | — | — | — |
| | — | — | — | — | — | — | — | — | — | — | — | COGD | SCK | — | — | — | — | — |

**Note 1:** Default peripheral input. Input can be moved to any other pin with the PPS input selection registers. See Register 12-2.
**2:** All pin outputs default to PORT latch data. Any pin can be selected as a digital peripheral output with the PPS output selection registers. See Register 12-3.
**3:** These peripheral functions are bidirectional. The output pin selections must be the same as the input pin selections.


Preliminary
© 2013 Microchip Technology Inc.

chanhvinh.com



## Table of Contents


1.0 Device Overview ..... 9
2.0 Enhanced Mid-Range CPU ..... 17
3.0 Memory Organization ..... 19
4.0 Device Configuration ..... 49
5.0 Resets ..... 55
6.0 Oscillator Module (with Fail-Safe Clock Monitor) ..... 63
7.0 Interrupts ..... 81
8.0 Power-Down Mode (Sleep) ..... 95
9.0 Watchdog Timer (WDT) ..... 99
10.0 Flash Program Memory Control ..... 105
11.0 I/O Ports ..... 121
12.0 Peripheral Pin Select (PPS) Module ..... 139
13.0 Interrupt-On-Change ..... 147
14.0 Fixed Voltage Reference (FVR) ..... 153
15.0 Temperature Indicator Module ..... 157
16.0 Comparator Module ..... 159
17.0 Pulse Width Modulation (PWM) ..... 169
18.0 Complementary Output Generator (COG) Module ..... 175
19.0 Configurable Logic Cell (CLC) ..... 207
20.0 Analog-to-Digital Converter (ADC) Module ..... 223
21.0 Operational Amplifier (OPA) Modules ..... 237
22.0 8-Bit Digital-to-Analog Converter (DAC1) Module ..... 241
23.0 Zero Cross Detection (ZCD) Module ..... 245
24.0 Timer0 Module ..... 249
25.0 Timer1 Module with Gate Control ..... 253
26.0 Timer2/4/6 Module ..... 265
27.0 Capture/Compare/PWM Modules ..... 271
28.0 Master Synchronous Serial Port (MSSP) Module ..... 281
29.0 Enhanced Universal Synchronous Asynchronous Receiver Transmitter (EUSART) ..... 337
30.0 In-Circuit Serial Programming™ (ICSP™) ..... 369
31.0 Instruction Set Summary ..... 371
32.0 Electrical Specifications ..... 385
33.0 DC and AC Characteristics Graphs and Charts ..... 419
34.0 Development Support ..... 435
35.0 Packaging Information ..... 439
The Microchip Web Site ..... 467
Customer Change Notification Service ..... 467
Customer Support ..... 467
Product Identification System ..... 469


chanhvinh.com

chanhvinh.com



## TO OUR VALUED CUSTOMERS

It is our intention to provide our valued customers with the best documentation possible to ensure successful use of your Microchip products. To this end, we will continue to improve our publications to better suit your needs. Our publications will be refined and enhanced as new volumes and updates are introduced.

If you have any questions or comments regarding this publication, please contact the Marketing Communications Department via E-mail at **docerrors@microchip.com**. We welcome your feedback.

### Most Current Data Sheet

To obtain the most up-to-date version of this data sheet, please register at our Worldwide Web site at:

**http://www.microchip.com**

You can determine the version of a data sheet by examining its literature number found on the bottom outside corner of any page. The last character of the literature number is the version number, (e.g., DS30000000A is version A of document DS30000000).

### Errata

An errata sheet, describing minor operational differences from the data sheet and recommended workarounds, may exist for current devices. As device/documentation issues become known to us, we will publish an errata sheet. The errata will specify the revision of silicon and revision of document to which it applies.

To determine if an errata sheet exists for a particular device, please check with one of the following:

- Microchip's Worldwide Web site; **http://www.microchip.com**
- Your local Microchip sales office (see last page)

When contacting a sales office, please specify which device, revision of silicon and data sheet (include literature number) you are using.

### Customer Notification System

Register on our web site at **www.microchip.com** to receive the most current information on all of our products.

 © 2013 Microchip Technology Inc.

chanhvinh.com



## 1.0 DEVICE OVERVIEW

The PIC16(L)F1704/8 are described within this data sheet. They are available in 14-pin and 20-pin DIP packages and 16-pin and 20-pin QFN packages. Figure 1-1 shows a block diagram of the PIC16(L)F1704/8 devices. Table 1-2 shows the pinout descriptions.

Reference Table 1-1 for peripherals available per device.

**TABLE 1-1: DEVICE PERIPHERAL SUMMARY**

| Peripheral | | PIC16(L)F1704 | PIC16(L)F1708 |
|---|---|---|---|
| Analog-to-Digital Converter (ADC) | | • | • |
| Digital-to-Analog Converter (DAC) | | • | • |
| Complementary Output Generator (COG) | | • | • |
| Fixed Voltage Reference (FVR) | | • | • |
| Zero Cross Detection (ZCD) | | • | • |
| Temperature Indicator | | • | • |
| Capture/Compare/PWM (CCP/ECCP) Modules | | | |
| | CCP1 | • | • |
| | CCP2 | • | • |
| Comparators | | | |
| | C1 | • | • |
| | C2 | • | • |
| Configurable Logic Cell (CLC) | | | |
| | CLC1 | • | • |
| | CLC2 | • | • |
| | CLC3 | • | • |
| Enhanced Universal Synchronous/Asynchronous Receiver/Transmitter (EUSART) | | | |
| | EUSART | • | • |
| Master Synchronous Serial Ports | | | |
| | MSSP | • | • |
| Op Amp | | | |
| | Op Amp 1 | • | • |
| | Op Amp 2 | • | • |
| Pulse Width Modulator (PWM) | | | |
| | PWM3 | • | • |
| | PWM4 | • | • |
| Timers | | | |
| | Timer0 | • | • |
| | Timer1 | • | • |
| | Timer2 | • | • |

chanhvinh.com



**FIGURE 1-1: PIC16(L)F1704/8 BLOCK DIAGRAM**

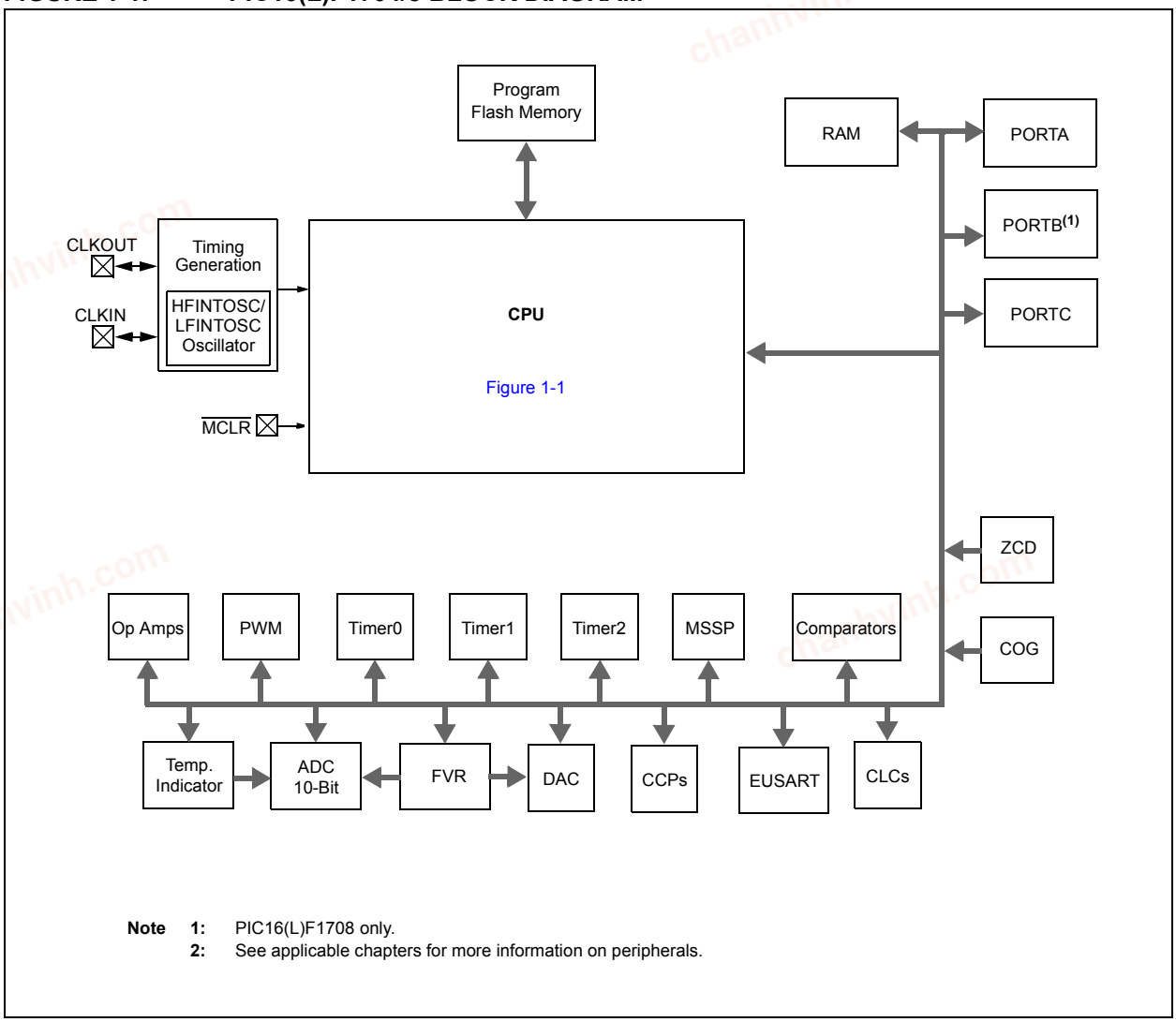


**Note 1:** PIC16(L)F1708 only.
**2:** See applicable chapters for more information on peripherals.

 © 2013 Microchip Technology Inc.

chanhvinh.com



**TABLE 1-2: PIC16(L)F1704 PINOUT DESCRIPTION**

| Name | Function | Input Type | Output Type | Description |
|---|---|---|---|---|
| RA0/AN0/VREF-/C1IN+/ DAC1OUT/ICSPDAT | RA0 | TTL/ST | CMOS | General purpose I/O. |
| | AN0 | AN | — | ADC Channel 0 input. |
| | VREF- | AN | — | ADC Negative Voltage Reference input. |
| | C1IN+ | AN | — | Comparator C1 positive input. |
| | DAC1OUT | — | AN | Digital-to-Analog Converter output. |
| | ICSPDAT | ST | CMOS | ICSP™ Data I/O. |
| RA1/AN1/VREF+/C1IN0-/C2IN0-/ ICSPCLK | RA1 | TTL/ST | CMOS | General purpose I/O. |
| | AN1 | AN | — | ADC Channel 1 input. |
| | VREF+ | AN | — | ADC Voltage Reference input. |
| | C1IN0- | AN | — | Comparator C2 negative input. |
| | C2IN0- | AN | — | Comparator C3 negative input. |
| | ICSPCLK | ST | — | Serial Programming Clock. |
| RA2/AN2/DAC1OUT2/ZCD/ T0CKI(1)/COGIN(1)/INT(1) | RA2 | TTL/ST | CMOS | General purpose I/O. |
| | AN2 | AN | — | ADC Channel 2 input. |
| | DAC1OUT2 | — | AN | Digital-to-Analog Converter output. |
| | ZCD | — | AN | Zero Cross Detection Current Source/Sink. |
| | T0CKI | ST | — | Timer0 clock input. |
| | COGIN | ST | CMOS | Complementary Output Generator input. |
| | INT | ST | — | External interrupt. |
| RA3/$\overline{\text{MCLR}}$/VPP | RA3 | TTL/ST | CMOS | General purpose I/O. |
| | $\overline{\text{MCLR}}$ | ST | — | Master Clear with internal pull-up. |
| | VPP | HV | — | Programming voltage. |
| RA4/AN3/T1G(1)/SOSCO/ OSC2/CLKOUT | RA4 | TTL/ST | CMOS | General purpose I/O. |
| | AN3 | AN | — | ADC Channel 3 input. |
| | T1G | ST | — | Timer1 gate input. |
| | SOSCO | XTAL | XTAL | Secondary Oscillator Connection. |
| | OSC2 | — | XTAL | Crystal/Resonator (LP, XT, HS modes). |
| | CLKOUT | — | CMOS | FOSC/4 output. |
| RA5/T1CKI(1)/SOSCI/ CLCIN3(1)/OSC1/CLKIN | RA5 | TTL/ST | CMOS | General purpose I/O. |
| | T1CKI | ST | — | Timer1 clock input. |
| | SOSCI | XTAL | XTAL | Secondary Oscillator Connection. |
| | CLCIN3 | ST | — | Configurable Logic Cell source input. |
| | OSC1 | — | XTAL | Crystal/Resonator (LP, XT, HS modes). |
| | CLKIN | ST | — | External clock input (EC mode). |
| RC0/AN4/C2IN+/OPA1IN+/ SCK(1)/SCL(3) | RC0 | TTL/ST | CMOS | General purpose I/O. |
| | AN4 | AN | — | ADC Channel 4 input. |
| | C2IN+ | AN | — | Comparator positive input. |
| | OPA1IN+ | AN | — | Operational Amplifier 1 non-inverting input. |
| | SCK | ST | CMOS | SPI clock. |
| | SCL | I2C | OD | I2C™ clock. |

**Legend:** AN = Analog input or output CMOS = CMOS compatible input or output OD = Open Drain
TTL = TTL compatible input ST = Schmitt Trigger input with CMOS levels I2C™ = Schmitt Trigger input with I2C
HV = High Voltage XTAL = Crystal levels

**Note 1:** Default peripheral input. Input can be moved to any other pin with the PPS input selection registers. See Register 12-1.

**2:** All pin outputs default to PORT latch data. Any pin can be selected as a digital peripheral output with the PPS output selection registers. See Register 12-3.

**3:** These I2C functions are bidirectional. The output pin selections must be the same as the input pin selections.

chanhvinh.com



**TABLE 1-2: PIC16(L)F1704 PINOUT DESCRIPTION (CONTINUED)**

| Name | Function | Input Type | Output Type | Description |
|---|---|---|---|---|
| RC1/AN5/C1IN1-/C2IN1-/ OPA1IN-/SDI(1)/SDA(3)/ CLCIN2(1) | RC1 | TTL/ST | CMOS | General purpose I/O. |
| | AN5 | AN | — | ADC Channel 5 input. |
| | C1IN1- | AN | — | Comparator C1 negative input. |
| | C2IN1- | AN | — | Comparator C2 negative input. |
| | OPA1IN- | AN | — | Operational Amplifier 1 inverting input. |
| | SDI | CMOS | — | SPI data input. |
| | SDA | $I^2C$ | OD | $I^2C$™ data input/output. |
| | CLCIN2 | ST | — | Configurable Logic Cell source input. |
| RC2/AN6/C1IN2-/C2IN2-/ OPA1OUT | RC2 | TTL/ST | CMOS | General purpose I/O. |
| | AN6 | AN | — | ADC Channel 6 input. |
| | C1IN2- | AN | — | Comparator C1 negative input. |
| | C2IN2- | AN | — | Comparator C2 negative input. |
| | OPA1OUT | — | AN | Operational Amplifier 1 output. |
| RC3/AN7/C1IN3-/C2IN3-/ OPA2OUT/CCP2(1)/$\overline{SS}$(1)/ CLCIN0(1) | RC3 | TTL/ST | CMOS | General purpose I/O. |
| | AN7 | AN | — | ADC Channel 7 input. |
| | C1IN3- | AN | — | Comparator C1 negative input. |
| | C2IN3- | AN | — | Comparator C2 negative input. |
| | OPA2OUT | — | AN | Operational Amplifier 2 output. |
| | CCP2 | ST | CMOS | Capture/Compare/PWM2. |
| | $\overline{SS}$ | ST | — | Slave Select input. |
| | CLCIN0 | ST | — | Configurable Logic Cell source input. |
| RC4/OPA2IN-/CK(1)/CLCIN1(1) | RC4 | TTL/ST | CMOS | General purpose I/O. |
| | OPA2IN- | AN | — | Operational Amplifier 2 inverting input. |
| | CK | ST | CMOS | USART synchronous clock. |
| | CLCIN1 | ST | — | Configurable Logic Cell source input. |
| RC5/OPA2IN+/CCP1(1)/RX(1) | RC5 | TTL/ST | CMOS | General purpose I/O. |
| | OPA2IN+ | AN | — | Operational Amplifier 2 non-inverting input. |
| | CCP1 | ST | CMOS | Capture/Compare/PWM1. |
| | RX | ST | — | USART asynchronous input. |
| VDD | VDD | Power | — | Positive supply. |
| VSS | VSS | Power | — | Ground reference. |

**Legend:** AN = Analog input or output CMOS = CMOS compatible input or output OD = Open Drain
TTL = TTL compatible input ST = Schmitt Trigger input with CMOS levels $I^2C$™ = Schmitt Trigger input with $I^2C$
HV = High Voltage XTAL = Crystal levels

**Note 1:** Default peripheral input. Input can be moved to any other pin with the PPS input selection registers. See Register 12-1.
**2:** All pin outputs default to PORT latch data. Any pin can be selected as a digital peripheral output with the PPS output selection registers. See Register 12-3.
**3:** These $I^2C$ functions are bidirectional. The output pin selections must be the same as the input pin selections.

 © 2013 Microchip Technology Inc.

chanhvinh.com



**TABLE 1-2: PIC16(L)F1704 PINOUT DESCRIPTION (CONTINUED)**

| Name | Function | Input Type | Output Type | Description |
|---|---|---|---|---|
| OUT(2) | C1OUT | — | CMOS | Comparator output. |
| | C2OUT | — | CMOS | Comparator output. |
| | CCP1 | — | CMOS | Capture/Compare/PWM1 output. |
| | CCP2 | — | CMOS | Capture/Compare/PWM2 output. |
| | PWM3OUT | — | CMOS | PWM3 output. |
| | PWM4OUT | — | CMOS | PWM4 output. |
| | COGA | — | CMOS | Complementary Output Generator Output A. |
| | COGB | — | CMOS | Complementary Output Generator Output B. |
| | COGC | — | CMOS | Complementary Output Generator Output C. |
| | COGD | — | CMOS | Complementary Output Generator Output D. |
| | SDA(3) | — | OD | $I^2C$™ data input/output. |
| | SDO | — | CMOS | SPI data output. |
| | SCK | — | CMOS | SPI clock output. |
| | SCL(3) | $I^2C$ | OD | $I^2C$™ clock output. |
| | TX/CK | — | CMOS | USART asynchronous TX data/synchronous clock output. |
| | DT | — | CMOS | USART synchronous data output. |
| | CLC1OUT | — | CMOS | Configurable Logic Cell 1 source output. |
| | CLC2OUT | — | CMOS | Configurable Logic Cell 2 source output. |
| | CLC3OUT | — | CMOS | Configurable Logic Cell 3 source output. |

**Legend:** AN = Analog input or output CMOS = CMOS compatible input or output OD = Open Drain
TTL = TTL compatible input ST = Schmitt Trigger input with CMOS levels $I^2C$™ = Schmitt Trigger input with $I^2C$
HV = High Voltage XTAL = Crystal levels

**Note 1:** Default peripheral input. Input can be moved to any other pin with the PPS input selection registers. See Register 12-1.
**2:** All pin outputs default to PORT latch data. Any pin can be selected as a digital peripheral output with the PPS output selection registers. See Register 12-3.
**3:** These $I^2C$ functions are bidirectional. The output pin selections must be the same as the input pin selections.

chanhvinh.com



**TABLE 1-3: PIC16(L)F1708 PIN OUT DESCRIPTION**

| Name | Function | Input Type | Output Type | Description |
|---|---|---|---|---|
| RA0/AN0/VREF-/C1IN+/ DAC1OUT/ICSPDAT | RA0 | TTL/ST | CMOS | General purpose I/O. |
| | AN0 | AN | — | ADC Channel 0 input. |
| | VREF- | AN | — | ADC Negative Voltage Reference input. |
| | C1IN+ | AN | — | Comparator C1 positive input. |
| | DAC1OUT | — | AN | Digital-to-Analog Converter output. |
| | ICSPDAT | ST | CMOS | ICSP™ Data I/O. |
| RA1/AN1/VREF+/C1IN0-/C2IN0-/ ICSPCLK | RA1 | TTL/ST | CMOS | General purpose I/O. |
| | AN1 | AN | — | ADC Channel 1 input. |
| | VREF+ | AN | — | ADC Voltage Reference input. |
| | C1IN0- | AN | — | Comparator C2 negative input. |
| | C2IN0- | AN | — | Comparator C3 negative input. |
| | ICSPCLK | ST | — | Serial Programming Clock. |
| RA2/AN2/DAC1OUT2/ZCD/ T0CKI(1)/COGIN(1)/INT(1) | RA2 | TTL/ST | CMOS | General purpose I/O. |
| | AN2 | AN | — | ADC Channel 2 input. |
| | DAC1OUT2 | — | AN | Digital-to-Analog Converter output. |
| | ZCD | — | AN | Zero-Cross Detection Current Source/Sink. |
| | T0CKI | ST | — | Timer0 clock input. |
| | COGIN | ST | CMOS | Complementary Output Generator input. |
| | INT | ST | — | External interrupt. |
| RA3/$\overline{\text{MCLR}}$/VPP | RA3 | TTL/ST | CMOS | General purpose I/O. |
| | $\overline{\text{MCLR}}$ | ST | — | Master Clear with internal pull-up. |
| | VPP | HV | — | Programming voltage. |
| RA4/AN3/T1G(1)/SOSCO/ OSC2/CLKOUT | RA4 | TTL/ST | CMOS | General purpose I/O. |
| | AN3 | AN | — | ADC Channel 3 input. |
| | T1G | ST | — | Timer1 gate input. |
| | SOSCO | XTAL | XTAL | Secondary Oscillator Connection. |
| | OSC2 | — | XTAL | Crystal/Resonator (LP, XT, HS modes). |
| | CLKOUT | — | CMOS | FOSC/4 output. |
| RA5/T1CKI/SOSCI/ CLCIN3(1)/OSC1/CLKIN | RA5 | TTL/ST | CMOS | General purpose I/O. |
| | T1CKI | ST | — | Timer1 clock input. |
| | SOSCI | XTAL | XTAL | Secondary Oscillator Connection. |
| | CLCIN3 | ST | — | Configurable Logic Cell source input. |
| | OSC1 | — | XTAL | Crystal/Resonator (LP, XT, HS modes). |
| | CLKIN | ST | — | External clock input (EC mode). |
| RB4/AN10/OPA1IN-/SCK(1)/ SDA(3) | RB4 | TTL/ST | CMOS | General purpose I/O. |
| | AN10 | AN | — | ADC Channel 10 input. |
| | OPA1IN- | AN | — | Operational Amplifier 1 inverting input. |
| | SCK | ST | CMOS | SPI clock. |
| | SDA | I2C | OD | I2C™ data input/output. |

**Legend:** AN = Analog input or output CMOS = CMOS compatible input or output OD = Open Drain
TTL = TTL compatible input ST = Schmitt Trigger input with CMOS levels I2C™ = Schmitt Trigger input with I2C
HV = High Voltage XTAL = Crystal levels

**Note 1:** Default peripheral input. Input can be moved to any other pin with the PPS input selection registers. See Register 12-2.
**2:** All pin outputs default to PORT latch data. Any pin can be selected as a digital peripheral output with the PPS output selection registers. See Register 12-3.
**3:** These I2C functions are bidirectional. The output pin selections must be the same as the input pin selections.

 © 2013 Microchip Technology Inc.

chanhvinh.com



**TABLE 1-3: PIC16(L)F1708 PIN OUT DESCRIPTION (CONTINUED)**

| Name | Function | Input Type | Output Type | Description |
|---|---|---|---|---|
| RB5/AN11/OPA1IN+/RX(1) | RB5 | TTL/ST | CMOS | General purpose I/O. |
| | AN11 | AN | — | ADC Channel 11 input. |
| | OPA1IN+ | AN | — | Operational Amplifier 1 non-inverting input. |
| | RX | ST | — | USART asynchronous input. |
| RB6/SDI(1)/SCL(3) | RB6 | TTL/ST | CMOS | General purpose I/O. |
| | SDI | CMOS | — | SPI data input. |
| | SCL | $I^2C$ | OD | $I^2C$™ clock. |
| RB7/CK(1) | RB7 | TTL/ST | CMOS | General purpose I/O. |
| | CK | ST | CMOS | USART synchronous clock. |
| RC0/AN4/C2IN+ | RC0 | TTL/ST | CMOS | General purpose I/O. |
| | AN4 | AN | — | ADC Channel 4 input. |
| | C2IN+ | AN | — | Comparator positive input. |
| RC1/AN5/C1IN1-/C2IN1-/ CLCIN2(1) | RC1 | TTL/ST | CMOS | General purpose I/O. |
| | AN5 | AN | — | ADC Channel 5 input. |
| | C1IN1- | AN | — | Comparator C1 negative input. |
| | C2IN1- | AN | — | Comparator C2 negative input. |
| | CLCIN2 | ST | — | Configurable Logic Cell source input. |
| RC2/AN6/C1IN2-/C2IN2-/ OPA1OUT | RC2 | TTL/ST | CMOS | General purpose I/O. |
| | AN6 | AN | — | ADC Channel 6 input. |
| | C1IN2- | AN | — | Comparator C1 negative input. |
| | C2IN2- | AN | — | Comparator C2 negative input. |
| | OPA1OUT | — | AN | Operational Amplifier 1 output. |
| RC3/AN7/C1IN3-/C2IN3-/ OPA2OUT/CCP2(1)/CLCIN0(1) | RC3 | TTL/ST | CMOS | General purpose I/O. |
| | AN7 | AN | — | ADC Channel 7 input. |
| | C1IN3- | AN | — | Comparator C1 negative input. |
| | C2IN3- | AN | — | Comparator C2 negative input. |
| | OPA2OUT | — | AN | Operational Amplifier 2 output. |
| | CCP2 | ST | CMOS | Capture/Compare/PWM2. |
| | CLCIN0 | ST | — | Configurable Logic Cell source input. |
| RC4/CLCIN1(1) | RC4 | TTL/ST | CMOS | General purpose I/O. |
| | CLCIN1 | ST | — | Configurable Logic Cell source input. |
| RC5/CCP1(1) | RC5 | TTL/ST | CMOS | General purpose I/O. |
| | CCP1 | ST | CMOS | Capture/Compare/PWM1. |
| RC6/AN8/OPA2IN-/$\overline{SS}$(1) | RC6 | TTL/ST | CMOS | General purpose I/O. |
| | AN8 | AN | — | ADC Channel 8 input. |
| | OPA2IN- | AN | — | Operational Amplifier 2 inverting input. |
| | $\overline{SS}$ | ST | — | Slave Select input. |
| RC7/AN9/OPA2IN+ | RC7 | TTL/ST | CMOS | General purpose I/O. |
| | AN9 | AN | — | ADC Channel 9 input. |
| | OPA2IN+ | AN | — | Operational Amplifier 2 non-inverting input. |
| VDD | VDD | Power | — | Positive supply. |

**Legend:** AN = Analog input or output CMOS = CMOS compatible input or output OD = Open Drain
TTL = TTL compatible input ST = Schmitt Trigger input with CMOS levels $I^2C$™ = Schmitt Trigger input with $I^2C$
HV = High Voltage XTAL = Crystal levels

**Note 1:** Default peripheral input. Input can be moved to any other pin with the PPS input selection registers. See Register 12-2.

**2:** All pin outputs default to PORT latch data. Any pin can be selected as a digital peripheral output with the PPS output selection registers. See Register 12-3.

**3:** These $I^2C$ functions are bidirectional. The output pin selections must be the same as the input pin selections.

chanhvinh.com



**TABLE 1-3: PIC16(L)F1708 PIN OUT DESCRIPTION (CONTINUED)**

| Name | Function | Input Type | Output Type | Description |
|---|---|---|---|---|
| VSS | VSS | Power | — | Ground reference. |
| OUT(2) | C1OUT | — | CMOS | Comparator output. |
| | C2OUT | — | CMOS | Comparator output. |
| | CCP1 | — | CMOS | Capture/Compare/PWM1 output. |
| | CCP2 | — | CMOS | Capture/Compare/PWM2 output. |
| | PWM3OUT | — | CMOS | PWM3 output. |
| | PWM4OUT | — | CMOS | PWM4 output. |
| | COGA | — | CMOS | Complementary Output Generator Output A. |
| | COGB | — | CMOS | Complementary Output Generator Output B. |
| | COGC | — | CMOS | Complementary Output Generator Output C. |
| | COGD | — | CMOS | Complementary Output Generator Output D. |
| | SDA(3) | — | OD | $I^2C$™ data input/output. |
| | SDO | — | CMOS | SPI data output. |
| | SCK | — | CMOS | SPI clock output. |
| | SCL(3) | $I^2C$ | OD | $I^2C$™ clock output. |
| | TX/CK | — | CMOS | USART asynchronous TX data/synchronous clock output. |
| | DT | — | CMOS | USART synchronous data output. |
| | CLC1OUT | — | CMOS | Configurable Logic Cell 1 source output. |
| | CLC2OUT | — | CMOS | Configurable Logic Cell 2 source output. |
| | CLC3OUT | — | CMOS | Configurable Logic Cell 3 source output. |

**Legend:** AN = Analog input or output CMOS = CMOS compatible input or output OD = Open Drain
TTL = TTL compatible input ST = Schmitt Trigger input with CMOS levels $I^2C$™ = Schmitt Trigger input with $I^2C$
HV = High Voltage XTAL = Crystal levels

**Note 1:** Default peripheral input. Input can be moved to any other pin with the PPS input selection registers. See Register 12-2.

**2:** All pin outputs default to PORT latch data. Any pin can be selected as a digital peripheral output with the PPS output selection registers. See Register 12-3.

**3:** These $I^2C$ functions are bidirectional. The output pin selections must be the same as the input pin selections.

 © 2013 Microchip Technology Inc.

chanhvinh.com



## 2.0 ENHANCED MID-RANGE CPU

This family of devices contain an enhanced mid-range 8-bit CPU core. The CPU has 49 instructions. Interrupt capability includes automatic context saving. The hardware stack is 16 levels deep and has Overflow and Underflow Reset capability. Direct, Indirect, and Relative addressing modes are available. Two File Select Registers (FSRs) provide the ability to read program and data memory.

- Automatic Interrupt Context Saving
- 16-level Stack with Overflow and Underflow
- File Select Registers
- Instruction Set

**FIGURE 2-1: CORE BLOCK DIAGRAM**

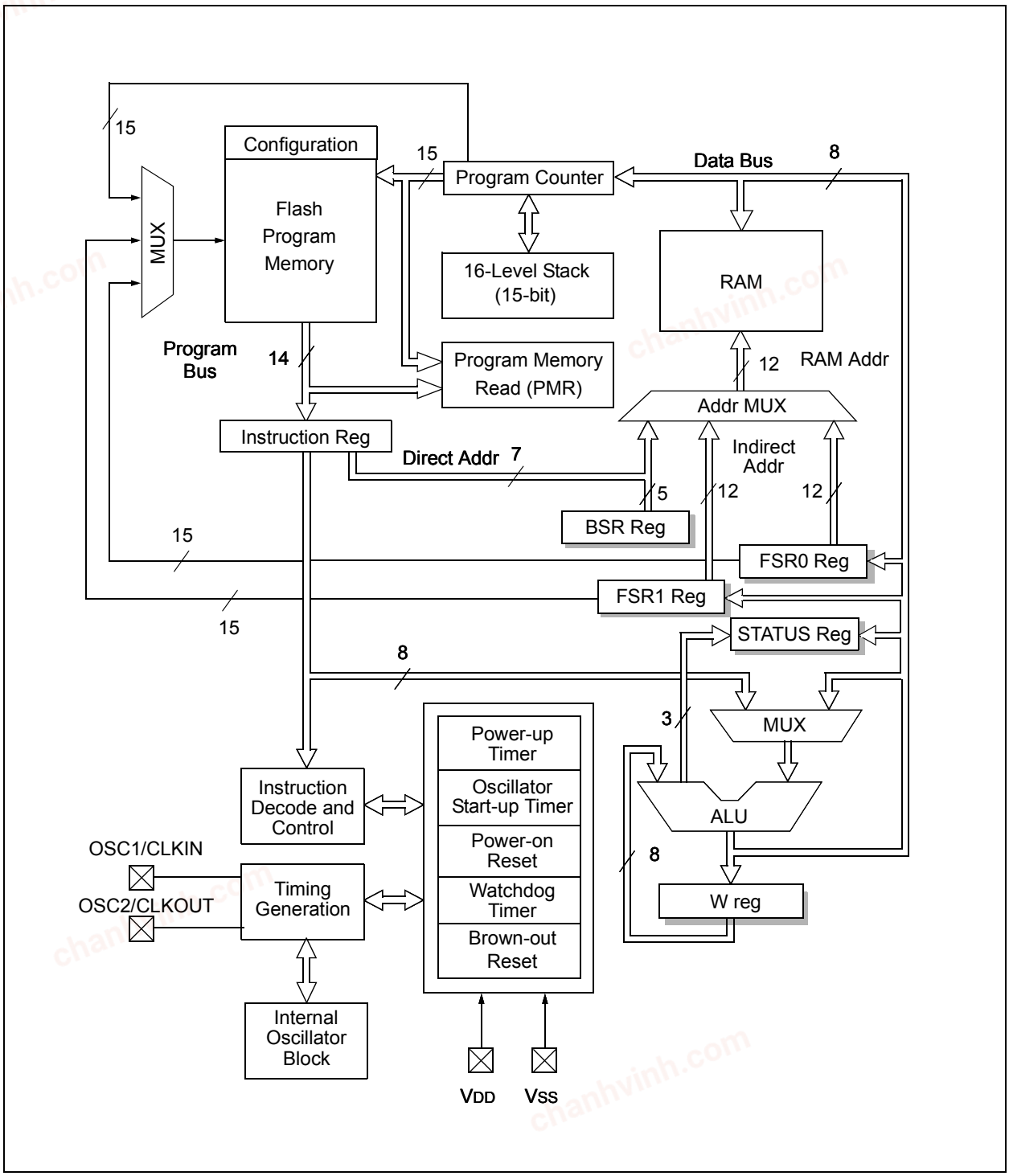

chanhvinh.com



## 2.1 Automatic Interrupt Context Saving

During interrupts, certain registers are automatically saved in shadow registers and restored when returning from the interrupt. This saves stack space and user code. See **Section 7.5 "Automatic Context Saving"** for more information.

## 2.2 16-Level Stack with Overflow and Underflow

These devices have a hardware stack memory 15 bits wide and 16 words deep. A Stack Overflow or Underflow will set the appropriate bit (STKOVF or STKUNF) in the PCON register, and if enabled, will cause a software Reset. See **Section 3.5 "Stack"** for more details.

## 2.3 File Select Registers

There are two 16-bit File Select Registers (FSR). FSRs can access all file registers and program memory, which allows one Data Pointer for all memory. When an FSR points to program memory, there is one additional instruction cycle in instructions using INDF to allow the data to be fetched. General purpose memory can now also be addressed linearly, providing the ability to access contiguous data larger than 80 bytes. There are also new instructions to support the FSRs. See **Section 3.6 "Indirect Addressing"** for more details.

## 2.4 Instruction Set

There are 49 instructions for the enhanced mid-range CPU to support the features of the CPU. See **Section 31.0 "Instruction Set Summary"** for more details.

 © 2013 Microchip Technology Inc.

chanhvinh.com



## 3.0 MEMORY ORGANIZATION

These devices contain the following types of memory:

- Program Memory
  - Configuration Words
  - Device ID
  - User ID
  - Flash Program Memory
- Data Memory
  - Core Registers
  - Special Function Registers
  - General Purpose RAM
  - Common RAM

**Note 1:** The method to access Flash memory through the PMCON registers is described in **Section 10.0 "Flash Program Memory Control"**.

The following features are associated with access and control of program memory and data memory:

- PCL and PCLATH
- Stack
- Indirect Addressing

### 3.1 Program Memory Organization

The enhanced mid-range core has a 15-bit program counter capable of addressing a 32K x 14 program memory space. Table 3-1 shows the memory sizes implemented for the PIC16(L)F1704/8 family. Accessing a location above these boundaries will cause a wrap-around within the implemented memory space. The Reset vector is at 0000h and the interrupt vector is at 0004h (see Figure 3-1).

**TABLE 3-1: DEVICE SIZES AND ADDRESSES**

| Device | Program Memory Space (Words) | Last Program Memory Address |
|---|---|---|
| PIC16(L)F1704/8 | 4,096 | 0FFFh |

chanhvinh.com



**FIGURE 3-1: PROGRAM MEMORY MAP AND STACK FOR PIC16(L)F1704/8**

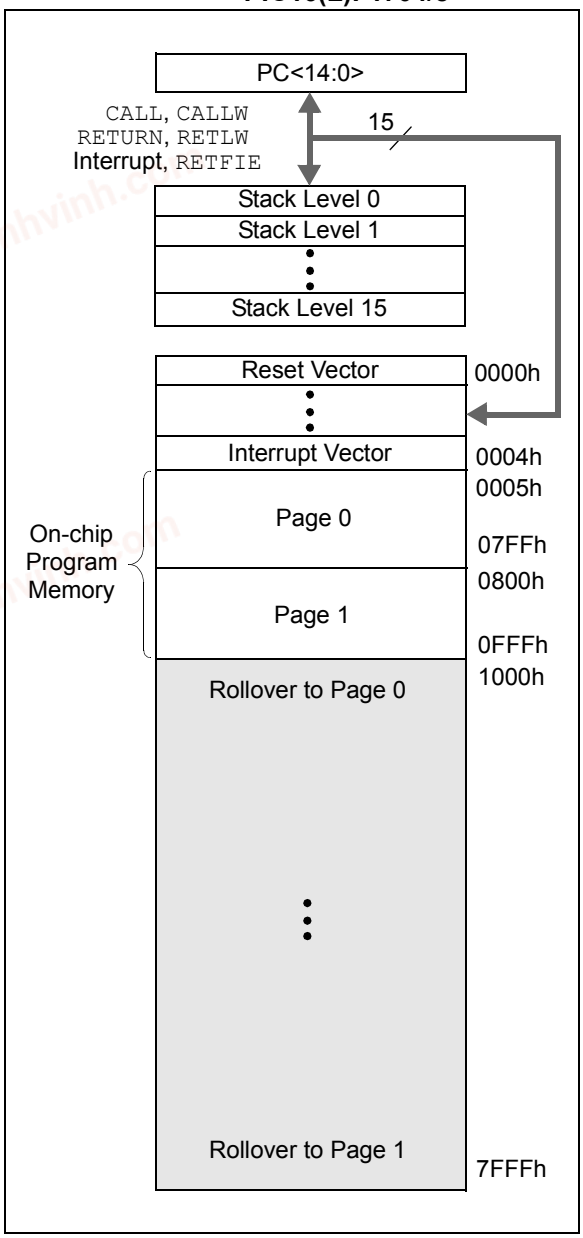


### 3.1.1 READING PROGRAM MEMORY AS DATA

There are two methods of accessing constants in program memory. The first method is to use tables of RETLW instructions. The second method is to set an FSR to point to the program memory.

#### 3.1.1.1 RETLW Instruction

The RETLW instruction can be used to provide access to tables of constants. The recommended way to create such a table is shown in Example 3-1.

**EXAMPLE 3-1: RETLW INSTRUCTION**

```
constants
    BRW                 ;Add Index in W to
                        ;program counter to
                        ;select data
    RETLW DATA0         ;Index0 data
    RETLW DATA1         ;Index1 data
    RETLW DATA2
    RETLW DATA3


my_function
    ;… LOTS OF CODE…
    MOVLW       DATA_INDEX
    call constants
    ;… THE CONSTANT IS IN W
```

The BRW instruction makes this type of table very simple to implement. If your code must remain portable with previous generations of microcontrollers, then the BRW instruction is not available so the older table read method must be used.

#### 3.1.1.2 Indirect Read with FSR

The program memory can be accessed as data by setting bit 7 of the FSRxH register and reading the matching INDFx register. The MOVIW instruction will place the lower eight bits of the addressed word in the W register. Writes to the program memory cannot be performed via the INDF registers. Instructions that access the program memory via the FSR require one extra instruction cycle to complete. Example 3-2 demonstrates accessing the program memory via an FSR.

The high directive will set bit<7> if a label points to a location in program memory.

 © 2013 Microchip Technology Inc.

chanhvinh.com



**EXAMPLE 3-2: ACCESSING PROGRAM MEMORY VIA FSR**

```
constants
    RETLW DATA0        ;Index0 data
    RETLW DATA1        ;Index1 data
    RETLW DATA2
    RETLW DATA3
my_function
    ;… LOTS OF CODE…
    MOVLW   LOW constants
    MOVWF   FSR1L
    MOVLW   HIGH constants
    MOVWF   FSR1H
    MOVIW   0[FSR1]
;THE PROGRAM MEMORY IS IN W
```

chanhvinh.com



## 3.2 Data Memory Organization

The data memory is partitioned in 32 memory banks with 128 bytes in a bank. Each bank consists of (Figure 3-2):

- 12 core registers
- 20 Special Function Registers (SFR)
- Up to 80 bytes of General Purpose RAM (GPR)
- 16 bytes of common RAM

The active bank is selected by writing the bank number into the Bank Select Register (BSR). Unimplemented memory will read as '0'. All data memory can be accessed either directly (via instructions that use the file registers) or indirectly via the two File Select Registers (FSR). See **Section 3.6 "Indirect Addressing"** for more information.

Data memory uses a 12-bit address. The upper five bits of the address define the Bank address and the lower seven bits select the registers/RAM in that bank.

### 3.2.1 CORE REGISTERS

The core registers contain the registers that directly affect the basic operation. The core registers occupy the first 12 addresses of every data memory bank (addresses x00h/x08h through x0Bh/x8Bh). These registers are listed below in Table 3-2. For detailed information, see Table 3-9.

**TABLE 3-2: CORE REGISTERS**

| Addresses | BANKx |
|---|---|
| x00h or x80h | INDF0 |
| x01h or x81h | INDF1 |
| x02h or x82h | PCL |
| x03h or x83h | STATUS |
| x04h or x84h | FSR0L |
| x05h or x85h | FSR0H |
| x06h or x86h | FSR1L |
| x07h or x87h | FSR1H |
| x08h or x88h | BSR |
| x09h or x89h | WREG |
| x0Ah or x8Ah | PCLATH |
| x0Bh or x8Bh | INTCON |

 © 2013 Microchip Technology Inc.

chanhvinh.com



#### 3.2.1.1 STATUS Register

The STATUS register, shown in Register 3-1, contains:

- the arithmetic status of the ALU
- the Reset status

The STATUS register can be the destination for any instruction, like any other register. If the STATUS register is the destination for an instruction that affects the Z, DC or C bits, then the write to these three bits is disabled. These bits are set or cleared according to the device logic. Furthermore, the $\overline{TO}$ and $\overline{PD}$ bits are not writable. Therefore, the result of an instruction with the STATUS register as destination may be different than intended.

For example, `CLRF STATUS` will clear the upper three bits and set the Z bit. This leaves the STATUS register as '`000u u1uu`' (where `u` = unchanged).

It is recommended, therefore, that only `BCF`, `BSF`, `SWAPF` and `MOVWF` instructions are used to alter the STATUS register, because these instructions do not affect any Status bits. For other instructions not affecting any Status bits (Refer to **Section 31.0 "Instruction Set Summary"**).

| **Note:** | The C and DC bits operate as $\overline{Borrow}$ and $\overline{Digit\ Borrow}$ out bits, respectively, in subtraction. |
|---|---|

## 3.3 Register Definitions: Status

**REGISTER 3-1: STATUS: STATUS REGISTER**

| U-0 | U-0 | U-0 | R-1/q | R-1/q | R/W-0/u | R/W-0/u | R/W-0/u |
|---|---|---|---|---|---|---|---|
| — | — | — | $\overline{TO}$ | $\overline{PD}$ | Z | DC(1) | C(1) |
| bit 7 | | | | | | | bit 0 |

| **Legend:** | | |
|---|---|---|
| R = Readable bit | W = Writable bit | U = Unimplemented bit, read as '0' |
| u = Bit is unchanged | x = Bit is unknown | -n/n = Value at POR and BOR/Value at all other Resets |
| '1' = Bit is set | '0' = Bit is cleared | q = Value depends on condition |

bit 7-5 **Unimplemented:** Read as '0'

bit 4 **$\overline{TO}$:** Time-Out bit
1 = After power-up, `CLRWDT` instruction or `SLEEP` instruction
0 = A WDT Time-out occurred

bit 3 **$\overline{PD}$:** Power-Down bit
1 = After power-up or by the `CLRWDT` instruction
0 = By execution of the `SLEEP` instruction

bit 2 **Z:** Zero bit
1 = The result of an arithmetic or logic operation is zero
0 = The result of an arithmetic or logic operation is not zero

bit 1 **DC:** Digit Carry/$\overline{Digit\ Borrow}$ bit (`ADDWF`, `ADDLW`, `SUBLW`, `SUBWF` instructions)(1)
1 = A carry-out from the 4th low-order bit of the result occurred
0 = No carry-out from the 4th low-order bit of the result

bit 0 **C:** Carry/$\overline{Borrow}$ bit(1) (`ADDWF`, `ADDLW`, `SUBLW`, `SUBWF` instructions)(1)
1 = A carry-out from the Most Significant bit of the result occurred
0 = No carry-out from the Most Significant bit of the result occurred

**Note 1:** For $\overline{Borrow}$, the polarity is reversed. A subtraction is executed by adding the two's complement of the second operand.

chanhvinh.com



### 3.3.1 SPECIAL FUNCTION REGISTER

The Special Function Registers are registers used by the application to control the desired operation of peripheral functions in the device. The Special Function Registers occupy the 20 bytes after the core registers of every data memory bank (addresses x0Ch/x8Ch through x1Fh/x9Fh). The registers associated with the operation of the peripherals are described in the appropriate peripheral chapter of this data sheet.

### 3.3.2 GENERAL PURPOSE RAM

There are up to 80 bytes of GPR in each data memory bank. The Special Function Registers occupy the 20 bytes after the core registers of every data memory bank (addresses x0Ch/x8Ch through x1Fh/x9Fh).

#### 3.3.2.1 Linear Access to GPR

The general purpose RAM can be accessed in a non-banked method via the FSRs. This can simplify access to large memory structures. See **Section 3.6.2 "Linear Data Memory"** for more information.

### 3.3.3 COMMON RAM

There are 16 bytes of common RAM accessible from all banks.

**FIGURE 3-2: BANKED MEMORY PARTITIONING**

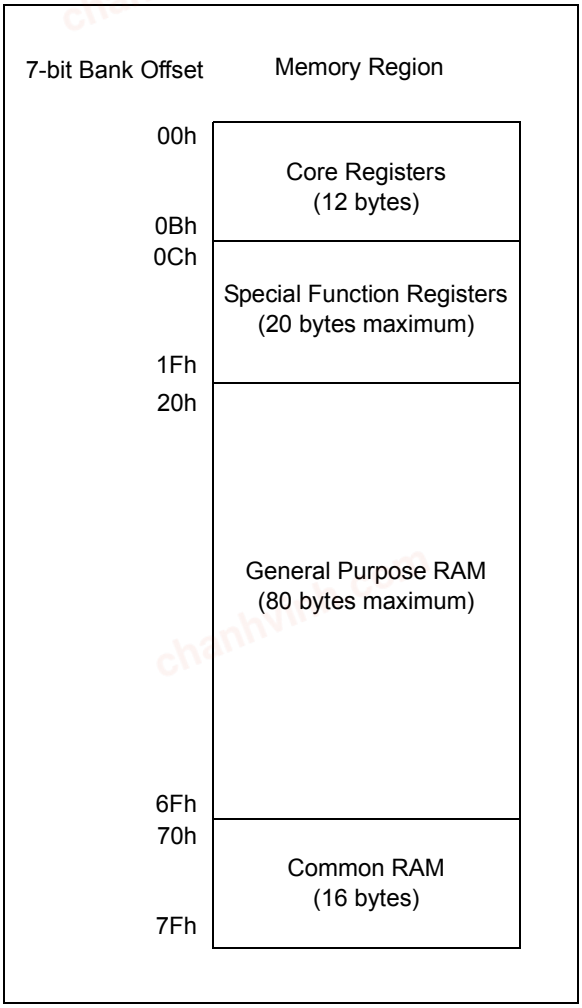


### 3.3.4 DEVICE MEMORY MAPS

The memory maps for the device family are as shown in Tables 3-3 through 3-8.

 © 2013 Microchip Technology Inc.

chanhvinh.com



## TABLE 3-3: PIC16(L)F1704 MEMORY MAP (BANKS 0-7)

| | BANK 0 | BANK 1 | BANK 2 | BANK 3 | BANK 4 | BANK 5 | BANK 6 | BANK 7 |
|---|---|---|---|---|---|---|---|---|
| 000h | Core Registers (Table 3-2) | 080h | Core Registers (Table 3-2) | 100h | Core Registers (Table 3-2) | 180h | Core Registers (Table 3-2) | 200h | Core Registers (Table 3-2) | 280h | Core Registers (Table 3-2) | 300h | Core Registers (Table 3-2) | 380h | Core Registers (Table 3-2) |
| 00Bh | | 08Bh | | 10Bh | | 18Bh | | 20Bh | | 28Bh | | 30Bh | | 38Bh | |
| 00Ch | PORTA | 08Ch | TRISA | 10Ch | LATA | 18Ch | ANSELA | 20Ch | WPUA | 28Ch | ODCONA | 30Ch | SLRCONA | 38Ch | INLVLA |
| 00Dh | — | 08Dh | — | 10Dh | — | 18Dh | — | 20Dh | — | 28Dh | — | 30Dh | — | 38Dh | — |
| 00Eh | PORTC | 08Eh | TRISC | 10Eh | LATC | 18Eh | ANSELC | 20Eh | WPUC | 28Eh | ODCONC | 30Eh | SLRCONC | 38Eh | INLVLC |
| 00Fh | — | 08Fh | — | 10Fh | — | 18Fh | — | 20Fh | — | 28Fh | — | 30Fh | — | 38Fh | — |
| 010h | — | 090h | — | 110h | — | 190h | — | 210h | — | 290h | — | 310h | — | 390h | — |
| 011h | PIR1 | 091h | PIE1 | 111h | CM1CON0 | 191h | PMADRL | 211h | SSP1BUF | 291h | CCPR1L | 311h | — | 391h | IOCAP |
| 012h | PIR2 | 092h | PIE2 | 112h | CM1CON1 | 192h | PMADRH | 212h | SSP1ADD | 292h | CCPR1H | 312h | — | 392h | IOCAN |
| 013h | PIR3 | 093h | PIE3 | 113h | CM2CON0 | 193h | PMDATL | 213h | SSP1MSK | 293h | CCP1CON | 313h | — | 393h | IOCAF |
| 014h | — | 094h | — | 114h | CM2CON1 | 194h | PMDATH | 214h | SSP1STAT | 294h | — | 314h | — | 394h | — |
| 015h | TMR0 | 095h | OPTION_REG | 115h | CMOUT | 195h | PMCON1 | 215h | SSP1CON | 295h | — | 315h | — | 395h | — |
| 016h | TMR1L | 096h | PCON | 116h | BORCON | 196h | PMCON2 | 216h | SSP1CON2 | 296h | — | 316h | — | 396h | — |
| 017h | TMR1H | 097h | WDTCON | 117h | FVRCON | 197h | VREGCON(1) | 217h | SSP1CON3 | 297h | — | 317h | — | 397h | IOCCP |
| 018h | T1CON | 098h | OSCTUNE | 118h | DAC1CON0 | 198h | — | 218h | — | 298h | CCPR2L | 318h | — | 398h | IOCCN |
| 019h | T1GCON | 099h | OSCCON | 119h | DAC1CON1 | 199h | RC1REG | 219h | — | 299h | CCPR2H | 319h | — | 399h | IOCCF |
| 01Ah | TMR2 | 09Ah | OSCSTAT | 11Ah | — | 19Ah | TX1REG | 21Ah | — | 29Ah | CCP2CON | 31Ah | — | 39Ah | — |
| 01Bh | PR2 | 09Bh | ADRESL | 11Bh | — | 19Bh | SP1BRGL | 21Bh | — | 29Bh | — | 31Bh | — | 39Bh | — |
| 01Ch | T2CON | 09Ch | ADRESH | 11Ch | ZCD1CON | 19Ch | SP1BRGH | 21Ch | — | 29Ch | — | 31Ch | — | 39Ch | — |
| 01Dh | — | 09Dh | ADCON0 | 11Dh | — | 19Dh | RC1STA | 21Dh | — | 29Dh | — | 31Dh | — | 39Dh | — |
| 01Eh | — | 09Eh | ADCON1 | 11Eh | — | 19Eh | TX1STA | 21Eh | — | 29Eh | CCPTMRS | 31Eh | — | 39Eh | — |
| 01Fh | — | 09Fh | ADCON2 | 11Fh | — | 19Fh | BAUD1CON | 21Fh | — | 29Fh | — | 31Fh | — | 39Fh | — |
| 020h | General Purpose Register 80 Bytes | 0A0h | General Purpose Register 80 Bytes | 120h | General Purpose Register 80 Bytes | 1A0h | General Purpose Register 80 Bytes | 220h | General Purpose Register 80 Bytes | 2A0h | General Purpose Register 80 Bytes | 320h<br>32Fh | General Purpose Register 16 Bytes | 3A0h | Unimplemented Read as '0' |
| 06Fh | | 0EFh | | 16Fh | | 1EFh | | 26Fh | | 2EFh | | 330h<br>36Fh | Unimplemented Read as '0' | 3EFh | |
| 070h | Common RAM 70h – 7Fh | 0F0h | Accesses 70h – 7Fh | 170h | Accesses 70h – 7Fh | 1F0h | Accesses 70h – 7Fh | 270h | Accesses 70h – 7Fh | 2F0h | Accesses 70h – 7Fh | 370h | Accesses 70h – 7Fh | 3F0h | Accesses 70h – 7Fh |
| 07Fh | | 0FFh | | 17Fh | | 1FFh | | 27Fh | | 2FFh | | 37Fh | | 3FFh | |

**Legend:** = Unimplemented data memory locations, read as '0'.

**Note 1:** Unimplemented on PIC16LF1704.

© 2013 Microchip Technology Inc.

chanhvinh.com



**TABLE 3-4: PIC16(L)1708 MEMORY MAP (BANKS 0-7)**

| BANK 0 | | BANK 1 | | BANK 2 | | BANK 3 | | BANK 4 | | BANK 5 | | BANK 6 | | BANK 7 | |
|---|---|---|---|---|---|---|---|---|---|---|---|---|---|---|---|
| 000h | Core Registers (Table 3-2) | 080h | Core Registers (Table 3-2) | 100h | Core Registers (Table 3-2) | 180h | Core Registers (Table 3-2) | 200h | Core Registers (Table 3-2) | 280h | Core Registers (Table 3-2) | 300h | Core Registers (Table 3-2) | 380h | Core Registers (Table 3-2) |
| 00Bh | | 08Bh | | 10Bh | | 18Bh | | 20Bh | | 28Bh | | 30Bh | | 38Bh | |
| 00Ch | PORTA | 08Ch | TRISA | 10Ch | LATA | 18Ch | ANSELA | 20Ch | WPUA | 28Ch | ODCONA | 30Ch | SLRCONA | 38Ch | INLVLA |
| 00Dh | PORTB | 08Dh | TRISB | 10Dh | LATB | 18Dh | ANSELB | 20Dh | WPUB | 28Dh | ODCONB | 30Dh | SLRCONB | 38Dh | INLVLB |
| 00Eh | PORTC | 08Eh | TRISC | 10Eh | LATC | 18Eh | ANSELC | 20Eh | WPUC | 28Eh | ODCONC | 30Eh | SLRCONC | 38Eh | INLVLC |
| 00Fh | — | 08Fh | — | 10Fh | — | 18Fh | — | 20Fh | — | 28Fh | — | 30Fh | — | 38Fh | — |
| 010h | — | 090h | — | 110h | — | 190h | — | 210h | — | 290h | — | 310h | — | 390h | — |
| 011h | PIR1 | 091h | PIE1 | 111h | CM1CON0 | 191h | PMADRL | 211h | SSP1BUF | 291h | CCPR1L | 311h | — | 391h | IOCAP |
| 012h | PIR2 | 092h | PIE2 | 112h | CM1CON1 | 192h | PMADRH | 212h | SSP1ADD | 292h | CCPR1H | 312h | — | 392h | IOCAN |
| 013h | PIR3 | 093h | PIE3 | 113h | CM2CON0 | 193h | PMDATL | 213h | SSP1MSK | 293h | CCP1CON | 313h | — | 393h | IOCAF |
| 014h | — | 094h | — | 114h | CM2CON1 | 194h | PMDATH | 214h | SSP1STAT | 294h | — | 314h | — | 394h | IOCBP |
| 015h | TMR0 | 095h | OPTION_REG | 115h | CMOUT | 195h | PMCON1 | 215h | SSP1CON | 295h | — | 315h | — | 395h | IOCBN |
| 016h | TMR1L | 096h | PCON | 116h | BORCON | 196h | PMCON2 | 216h | SSP1CON2 | 296h | — | 316h | — | 396h | IOCBF |
| 017h | TMR1H | 097h | WDTCON | 117h | FVRCON | 197h | VREGCON(1) | 217h | SSP1CON3 | 297h | — | 317h | — | 397h | IOCCP |
| 018h | T1CON | 098h | OSCTUNE | 118h | DAC1CON0 | 198h | — | 218h | — | 298h | CCPR2L | 318h | — | 398h | IOCCN |
| 019h | T1GCON | 099h | OSCCON | 119h | DAC1CON1 | 199h | RC1REG | 219h | — | 299h | CCPR2H | 319h | — | 399h | IOCCF |
| 01Ah | TMR2 | 09Ah | OSCSTAT | 11Ah | — | 19Ah | TX1REG | 21Ah | — | 29Ah | CCP2CON | 31Ah | — | 39Ah | — |
| 01Bh | PR2 | 09Bh | ADRESL | 11Bh | — | 19Bh | SP1BRGL | 21Bh | — | 29Bh | — | 31Bh | — | 39Bh | — |
| 01Ch | T2CON | 09Ch | ADRESH | 11Ch | ZCD1CON | 19Ch | SP1BRGH | 21Ch | — | 29Ch | — | 31Ch | — | 39Ch | — |
| 01Dh | — | 09Dh | ADCON0 | 11Dh | — | 19Dh | RC1STA | 21Dh | — | 29Dh | — | 31Dh | — | 39Dh | — |
| 01Eh | — | 09Eh | ADCON1 | 11Eh | — | 19Eh | TX1STA | 21Eh | — | 29Eh | CCPTMRS | 31Eh | — | 39Eh | — |
| 01Fh | — | 09Fh | ADCON2 | 11Fh | — | 19Fh | BAUD1CON | 21Fh | — | 29Fh | — | 31Fh | — | 39Fh | — |
| 020h | General Purpose Register 80 Bytes | 0A0h | General Purpose Register 80 Bytes | 120h | General Purpose Register 80 Bytes | 1A0h | General Purpose Register 80 Bytes | 220h | General Purpose Register 80 Bytes | 2A0h | General Purpose Register 80 Bytes | 320h<br>32Fh | General Purpose Register 16 Bytes | 3A0h | Unimplemented Read as '0' |
| 06Fh | | 0EFh | | 16Fh | | 1EFh | | 26Fh | | 2EFh | | 330h<br>36Fh | Unimplemented Read as '0' | 3EFh | |
| 070h | Common RAM 70h – 7Fh | 0F0h | Accesses 70h – 7Fh | 170h | Accesses 70h – 7Fh | 1F0h | Accesses 70h – 7Fh | 270h | Accesses 70h – 7Fh | 2F0h | Accesses 70h – 7Fh | 370h | Accesses 70h – 7Fh | 3F0h | Accesses 70h – 7Fh |
| 07Fh | | 0FFh | | 17Fh | | 1FFh | | 27Fh | | 2FFh | | 37Fh | | 3FFh | |

**Legend:** = Unimplemented data memory locations, read as '0'.

**Note 1:** Unimplemented on PIC16LF1708.



Preliminary

© 2013 Microchip Technology Inc.

chanhvinh.com

## TABLE 3-5: PIC16(L)F1704/8 MEMORY MAP, BANK 8-23

| BANK 8 | BANK 9 | BANK 10 | BANK 11 | BANK 12 | BANK 13 | BANK 14 | BANK 15 |
|---|---|---|---|---|---|---|---|
| 400h Core Registers (Table 3-2) 40Bh | 480h Core Registers (Table 3-2) 48Bh | 500h Core Registers (Table 3-2) 50Bh | 580h Core Registers (Table 3-2) 58Bh | 600h Core Registers (Table 3-2) 60Bh | 680h Core Registers (Table 3-2) 68Bh | 700h Core Registers (Table 3-2) 70Bh | 780h Core Registers (Table 3-2) 78Bh |
| 40Ch — | 48Ch — | 50Ch — | 58Ch — | 60Ch — | 68Ch — | 70Ch — | 78Ch — |
| 40Dh — | 48Dh — | 50Dh — | 58Dh — | 60Dh — | 68Dh — | 70Dh — | 78Dh — |
| 40Eh — | 48Eh — | 50Eh — | 58Eh — | 60Eh — | 68Eh — | 70Eh — | 78Eh — |
| 40Fh — | 48Fh — | 50Fh — | 58Fh — | 60Fh — | 68Fh — | 70Fh — | 78Fh — |
| 410h — | 490h — | 510h — | 590h — | 610h — | 690h — | 710h — | 790h — |
| 411h — | 491h — | 511h OPA1CON | 591h — | 611h — | 691h COG1PHR | 711h — | 791h — |
| 412h — | 492h — | 512h — | 592h — | 612h — | 692h COG1PHF | 712h — | 792h — |
| 413h — | 493h — | 513h — | 593h — | 613h — | 693h COG1BLKR | 713h — | 793h — |
| 414h — | 494h — | 514h — | 594h — | 614h — | 694h COG1BLKF | 714h — | 794h — |
| 415h TMR4 | 495h — | 515h OPA2CON | 595h — | 615h — | 695h COG1DBR | 715h — | 795h — |
| 416h PR4 | 496h — | 516h — | 596h — | 616h — | 696h COG1DBF | 716h — | 796h — |
| 417h T4CON | 497h — | 517h — | 597h — | 617h PWM3DCL | 697h COG1CON0 | 717h — | 797h — |
| 418h — | 498h — | 518h — | 598h — | 618h PWM3DCH | 698h COG1CON1 | 718h — | 798h — |
| 419h — | 499h — | 519h — | 599h — | 619h PWM3CON | 699h COG1RIS | 719h — | 799h — |
| 41Ah — | 49Ah — | 51Ah — | 59Ah — | 61Ah PWM4DCL | 69Ah COG1RSIM | 71Ah — | 79Ah — |
| 41Bh — | 49Bh — | 51Bh — | 59Bh — | 61Bh PWM4DCH | 69Bh COG1FIS | 71Bh — | 79Bh — |
| 41Ch TMR6 | 49Ch — | 51Ch — | 59Ch — | 61Ch PWM4CON | 69Ch COG1FSIM | 71Ch — | 79Ch — |
| 41Dh PR6 | 49Dh — | 51Dh — | 59Dh — | 61Dh — | 69Dh COG1ASD0 | 71Dh — | 79Dh — |
| 41Eh T6CON | 49Eh — | 51Eh — | 59Eh — | 61Eh — | 69Eh COG1ASD1 | 71Eh — | 79Eh — |
| 41Fh — | 49Fh — | 51Fh — | 59Fh — | 61Fh — | 69Fh COG1STR | 71Fh — | 79Fh — |
| 420h Unimplemented Read as '0' 46Fh | 4A0h Unimplemented Read as '0' 4EFh | 520h Unimplemented Read as '0' 56Fh | 5A0h Unimplemented Read as '0' 5EFh | 620h Unimplemented Read as '0' 66Fh | 6A0h Unimplemented Read as '0' 6EFh | 720h Unimplemented Read as '0' 76Fh | 7A0h Unimplemented Read as '0' 7EFh |
| 470h Accesses 70h – 7Fh 47Fh | 4F0h Accesses 70h – 7Fh 4FFh | 570h Accesses 70h – 7Fh 57Fh | 5F0h Accesses 70h – 7Fh 5FFh | 670h Accesses 70h – 7Fh 67Fh | 6F0h Accesses 70h – 7Fh 6FFh | 770h Accesses 70h – 7Fh 77Fh | 7F0h Accesses 70h – 7Fh 7FFh |

| BANK 16 | BANK 17 | BANK 18 | BANK 19 | BANK 20 | BANK 21 | BANK 22 | BANK 23 |
|---|---|---|---|---|---|---|---|
| 800h Core Registers (Table 3-2) 80Bh | 880h Core Registers (Table 3-2) 88Bh | 900h Core Registers (Table 3-2) 90Bh | 980h Core Registers (Table 3-2) 98Bh | A00h Core Registers (Table 3-2) A0Bh | A80h Core Registers (Table 3-2) A8Bh | B00h Core Registers (Table 3-2) B0Bh | B80h Core Registers (Table 3-2) B8Bh |
| 80Ch Unimplemented Read as '0' 86Fh | 88Ch Unimplemented Read as '0' 8EFh | 90Ch Unimplemented Read as '0' 96Fh | 98Ch Unimplemented Read as '0' 9EFh | A0Ch Unimplemented Read as '0' A6Fh | A8Ch Unimplemented Read as '0' AEFh | B0Ch Unimplemented Read as '0' B6Fh | B8Ch Unimplemented Read as '0' BEFh |
| 870h Accesses 70h – 7Fh 87Fh | 8F0h Accesses 70h – 7Fh 8FFh | 970h Accesses 70h – 7Fh 97Fh | 9F0h Accesses 70h – 7Fh 9FFh | A70h Accesses 70h – 7Fh A7Fh | AF0h Accesses 70h – 7Fh AFFh | B70h Accesses 70h – 7Fh B7Fh | BF0h Accesses 70h – 7Fh BFFh |

**Legend:** = Unimplemented data memory locations, read as '0'.

© 2013 Microchip Technology Inc.

chanhvinh.com



**TABLE 3-6: PIC16(L)F1704/8 MEMORY MAP, BANK 24-31**

| BANK 24 | BANK 25 | BANK 26 | BANK 27 | BANK 28 | BANK 29 | BANK 30 | BANK 31 |
|---|---|---|---|---|---|---|---|
| C00h | C80h | D00h | D80h | E00h | E80h | F00h | F80h |
| Core Registers (Table 3-2) | Core Registers (Table 3-2) | Core Registers (Table 3-2) | Core Registers (Table 3-2) | Core Registers (Table 3-2) | Core Registers (Table 3-2) | Core Registers (Table 3-2) | Core Registers (Table 3-2) |
| C0Bh | C8Bh | D0Bh | D8Bh | E0Bh | E8Bh | F0Bh | F8Bh |
| C0Ch – C1Fh: — | C8Ch – C9Fh: — | D0Ch – D1Fh: — | D8Ch – D9Fh: — | E0Ch – E1Fh | E8Ch – E9Fh | F0Ch – F1Fh | F8Ch – F9Fh |
| C20h | CA0h | D20h | DA0h | E20h | EA0h | F20h | FA0h |
| Unimplemented Read as '0' | Unimplemented Read as '0' | Unimplemented Read as '0' | Unimplemented Read as '0' | See Table 3-7 for register mapping details | See Table 3-7 for register mapping details | See Table 3-7 for register mapping details | See Table 3-8 for register mapping details |
| C6Fh | CEFh | D6Fh | DEFh | E6Fh | EEFh | F6Fh | FEFh |
| C70h | CF0h | D70h | DF0h | E70h | EF0h | F70h | FF0h |
| Accesses 70h – 7Fh | Accesses 70h – 7Fh | Accesses 70h – 7Fh | Accesses 70h – 7Fh | Accesses 70h – 7Fh | Accesses 70h – 7Fh | Accesses 70h – 7Fh | Accesses 70h – 7Fh |
| CFFh | CFFh | D7Fh | DFFh | E7Fh | EFFh | F7Fh | FFFh |

**Legend:** = Unimplemented data memory locations, read as '0'.



Preliminary

© 2013 Microchip Technology Inc.

chanhvinh.com



**TABLE 3-7: PIC16(L)F1704/8 MEMORY MAP, BANK 28-30**

| | Bank 28 | | Bank 29 | | Bank 30 |
|---|---|---|---|---|---|
| E0Ch | — | E8Ch | — | F0Ch | — |
| E0Dh | — | E8Dh | — | F0Dh | — |
| E0Eh | — | E8Eh | — | F0Eh | — |
| E0Fh | PPSLOCK | E8Fh | — | F0Fh | CLCDATA |
| E10h | INTPPS | E90h | RA0PPS | F10h | CLC1CON |
| E11h | T0CKIPPS | E91h | RA1PPS | F11h | CLC1POL |
| E12h | T1CKIPPS | E92h | RA2PPS | F12h | CLC1SEL0 |
| E13h | T1GPPS | E93h | — | F13h | CLC1SEL1 |
| E14h | CCP1PPS | E94h | RA4PPS | F14h | CLC1SEL2 |
| E15h | CCP2PPS | E95h | RA5PPS | F15h | CLC1SEL3 |
| E16h | — | E96h | — | F16h | CLC1GLS0 |
| E17h | COGINPPS | E97h | — | F17h | CLC1GLS1 |
| E18h | — | E98h | — | F18h | CLC1GLS2 |
| E19h | — | E99h | — | F19h | CLC1GLS3 |
| E1Ah | — | E9Ah | — | F1Ah | CLC2CON |
| E1Bh | — | E9Bh | — | F1Bh | CLC2POL |
| E1Ch | — | E9Ch | RB4PPS(1) | F1Ch | CLC2SEL0 |
| E1Dh | — | E9Dh | RB5PPS(1) | F1Dh | CLC2SEL1 |
| E1Eh | — | E9Eh | RB6PPS(1) | F1Eh | CLC2SEL2 |
| E1Fh | — | E9Fh | RB7PPS(1) | F1Fh | CLC2SEL3 |
| E20h | SSPCLKPPS | EA0h | RC0PPS | F20h | CLC2GLS0 |
| E21h | SSPDATPPS | EA1h | RC1PPS | F21h | CLC2GLS1 |
| E22h | SSPSSPPS | EA2h | RC2PPS | F22h | CLC2GLS2 |
| E23h | — | EA3h | RC3PPS | F23h | CLC2GLS3 |
| E24h | RXPPS | EA4h | RC4PPS | F24h | CLC3CON |
| E25h | CKPPS | EA5h | RC5PPS | F25h | CLC3POL |
| E26h | — | EA6h | RC6PPS(1) | F26h | CLC3SEL0 |
| E27h | — | EA7h | RC7PPS(1) | F27h | CLC3SEL1 |
| E28h | CLCIN0PPS | EA8h | — | F28h | CLC3SEL2 |
| E29h | CLCIN1PPS | EA9h | — | F29h | CLC3SEL3 |
| E2Ah | CLCIN2PPS | EAAh | — | F2Ah | CLC3GLS0 |
| E2Bh | CLCIN3PPS | EABh | — | F2Bh | CLC3GLS1 |
| E2Ch | — | EACh | — | F2Ch | CLC3GLS2 |
| E2Dh | — | EADh | — | F2Dh | CLC3GLS3 |
| E2Eh | — | EAEh | — | F2Eh | — |
| E2Fh | — | EAFh | — | F2Fh | — |
| E30h | — | EB0h | — | F30h | — |
| E31h | — | EB1h | — | F31h | — |
| E32h | — | EB2h | — | F32h | — |
| E33h | — | EB3h | — | F33h | — |
| E34h | — | EB4h | — | F34h | — |
| E35h | — | EB5h | — | F35h | — |
| E36h | — | EB6h | — | F36h | — |
| E37h | — | EB7h | — | F37h | — |
| E38h | — | EB8h | — | F38h | — |
| E39h | — | EB9h | — | F39h | — |
| E3Ah | — | EBAh | — | F3Ah | — |
| E3Bh | — | EBBh | — | F3Bh | — |
| E3Ch | — | EBCh | — | F3Ch | — |
| E3Dh | — | EBDh | — | F3Dh | — |
| E3Eh | — | EBEh | — | F3Eh | — |
| E3Fh | — | EBFh | — | F3Fh | — |
| E40h | — | EC0h | — | F40h | — |
| E6Fh | | EEFh | | F6Fh | |

Legend: = Unimplemented data memory locations, read as '0',

**Note 1:** Only available on PIC16(L)F1708 devices

chanhvinh.com



**TABLE 3-8: PIC16(L)F1704/8 MEMORY MAP, BANK 31**

| Bank 31 | |
|---|---|
| F8Ch<br>FE3h | Unimplemented<br>Read as '0' |
| FE4h | STATUS_SHAD |
| FE5h | WREG_SHAD |
| FE6h | BSR_SHAD |
| FE7h | PCLATH_SHAD |
| FE8h | FSR0L_SHAD |
| FE9h | FSR0H_SHAD |
| FEAh | FSR1L_SHAD |
| FEBh | FSR1H_SHAD |
| FECh | — |
| FEDh | STKPTR |
| FEEh | TOSL |
| FEFh | TOSH |

Legend: = Unimplemented data memory locations, read as '0',

 © 2013 Microchip Technology Inc.

chanhvinh.com



### 3.3.5 CORE FUNCTION REGISTERS SUMMARY

The Core Function registers listed in Table 3-9 can be addressed from any Bank.

**TABLE 3-9: CORE FUNCTION REGISTERS SUMMARY**

| Addr | Name | Bit 7 | Bit 6 | Bit 5 | Bit 4 | Bit 3 | Bit 2 | Bit 1 | Bit 0 | Value on POR, BOR | Value on all other Resets |
|---|---|---|---|---|---|---|---|---|---|---|---|
| **Bank 0-31** | | | | | | | | | | | |
| x00h or x80h | INDF0 | Addressing this location uses contents of FSR0H/FSR0L to address data memory (not a physical register) | | | | | | | | xxxx xxxx | uuuu uuuu |
| x01h or x81h | INDF1 | Addressing this location uses contents of FSR1H/FSR1L to address data memory (not a physical register) | | | | | | | | xxxx xxxx | uuuu uuuu |
| x02h or x82h | PCL | Program Counter (PC) Least Significant Byte | | | | | | | | 0000 0000 | 0000 0000 |
| x03h or x83h | STATUS | — | — | — | $\overline{TO}$ | $\overline{PD}$ | Z | DC | C | ---1 1000 | ---q quuu |
| x04h or x84h | FSR0L | Indirect Data Memory Address 0 Low Pointer | | | | | | | | 0000 0000 | uuuu uuuu |
| x05h or x85h | FSR0H | Indirect Data Memory Address 0 High Pointer | | | | | | | | 0000 0000 | 0000 0000 |
| x06h or x86h | FSR1L | Indirect Data Memory Address 1 Low Pointer | | | | | | | | 0000 0000 | uuuu uuuu |
| x07h or x87h | FSR1H | Indirect Data Memory Address 1 High Pointer | | | | | | | | 0000 0000 | 0000 0000 |
| x08h or x88h | BSR | — | — | — | BSR4 | BSR3 | BSR2 | BSR1 | BSR0 | ---0 0000 | ---0 0000 |
| x09h or x89h | WREG | Working Register | | | | | | | | 0000 0000 | uuuu uuuu |
| x0Ah or x8Ah | PCLATH | — | Write Buffer for the upper 7 bits of the Program Counter | | | | | | | -000 0000 | -000 0000 |
| x0Bh or x8Bh | INTCON | GIE | PEIE | TMR0IE | INTE | IOCIE | TMR0IF | INTF | IOCIF | 0000 0000 | 0000 0000 |

**Legend:** x = unknown, u = unchanged, q = value depends on condition, - = unimplemented, read as '0', r = reserved. Shaded locations are unimplemented, read as '0'.

**Note 1:** These registers can be addressed from any bank.

chanhvinh.com



**TABLE 3-10: SPECIAL FUNCTION REGISTER SUMMARY**

| Addr | Name | Bit 7 | Bit 6 | Bit 5 | Bit 4 | Bit 3 | Bit 2 | Bit 1 | Bit 0 | Value on POR, BOR | Value on all other Resets |
|---|---|---|---|---|---|---|---|---|---|---|---|
| **Bank 0** | | | | | | | | | | | |
| 00Ch | PORTA | — | — | RA5 | RA4 | RA3 | RA2 | RA1 | RA0 | --xx xxxx | --uu uuuu |
| 00Dh | PORTB(4) | RB7 | RB6 | RB5 | RB4 | — | — | — | — | xxxx ---- | uuuu ---- |
| 00Eh | PORTC | RC7(4) | RC6(4) | RC5 | RC4 | RC3 | RC2 | RC1 | RC0 | xxxx xxxx | uuuu uuuu |
| 00Fh | — | Unimplemented | | | | | | | | — | — |
| 010h | — | Unimplemented | | | | | | | | — | — |
| 011h | PIR1 | TMR1GIF | ADIF | RCIF | TXIF | SSP1IF | CCP1IF | TMR2IF | TMR1IF | 0000 0-00 | 0000 0-00 |
| 012h | PIR2 | OSFIF | C2IF | C1IF | — | BCL1IF | TMR6IF | TMR4IF | CCP2IF | 000- 00-- | 000- 00-- |
| 013h | PIR3 | — | — | COGIF | ZCDIF | — | CLC3IF | CLC2IF | CLC1IF | --00 -000 | --00 -000 |
| 014h | — | Unimplemented | | | | | | | | — | — |
| 015h | TMR0 | Timer0 Module Register | | | | | | | | xxxx xxxx | uuuu uuuu |
| 016h | TMR1L | Holding Register for the Least Significant Byte of the 16-bit TMR1 Register | | | | | | | | xxxx xxxx | uuuu uuuu |
| 017h | TMR1H | Holding Register for the Most Significant Byte of the 16-bit TMR1 Register | | | | | | | | xxxx xxxx | uuuu uuuu |
| 018h | T1CON | TMR1CS<1:0> | | T1CKPS<1:0> | | T1OSCEN | T1SYNC | — | TMR1ON | 0000 00-0 | uuuu uu-u |
| 019h | T1GCON | TMR1GE | T1GPOL | T1GTM | T1GSPM | T1GGO/DONE | T1GVAL | T1GSS<1:0> | | 0000 0x00 | uuuu uxuu |
| 01Ah | TMR2 | Holding Register for the Least Significant Byte of the 16-bit TMR2 Register | | | | | | | | xxxx xxxx | uuuu uuuu |
| 01Bh | PR2 | Holding Register for the Most Significant Byte of the 16-bit TMR2 Register | | | | | | | | xxxx xxxx | uuuu uuuu |
| 01Ch | T2CON | — | T2OUTPS<3:0> | | | | TMR2ON | T2CKPS<1:0> | | -000 0000 | -000 0000 |
| 01Dh to 01Fh | — | Unimplemented | | | | | | | | — | — |
| **Bank 1** | | | | | | | | | | | |
| 08Ch | TRISA | — | — | TRISA5 | TRISA4 | —(2) | TRISA2 | TRISA1 | TRISA0 | --11 1111 | --11 1111 |
| 08Dh | TRISB(4) | TRISB7 | TRISB6 | TRISB5 | TRISB4 | — | — | — | — | 1111 ---- | 1111 ---- |
| 08Eh | TRISC | TRISC7(4) | TRISC6(4) | TRISC5 | TRISC4 | TRISC3 | TRISC2 | TRISC1 | TRISC0 | 1111 1111 | 1111 1111 |
| 08Fh | — | Unimplemented | | | | | | | | — | — |
| 090h | — | Unimplemented | | | | | | | | — | — |
| 091h | PIE1 | TMR1GIE | ADIE | RCIE | TXIE | SSP1IE | CCP1IE | TMR2IE | TMR1IE | 0000 0000 | 0000 0000 |
| 092h | PIE2 | OSFIE | C2IE | C1IE | — | BCL1IE | TMR6IE | TMR4IE | CCP2IE | 000- 0000 | 000- 0000 |
| 093h | PIE3 | — | — | COGIE | ZCDIE | — | CLC3IE | CLC2IE | CLC1IE | --00 -000 | --00 -000 |
| 094h | — | Unimplemented | | | | | | | | — | — |
| 095h | OPTION_REG | WPUEN | INTEDG | TMR0CS | TMR0SE | PSA | PS<2:0> | | | 1111 1111 | 1111 1111 |
| 096h | PCON | STKOVF | STKUNF | — | RWDT | RMCLR | RI | POR | BOR | 00-1 11qq | qq-q qquu |
| 097h | WDTCON | — | — | WDTPS<4:0> | | | | | SWDTEN | --01 0110 | --01 0110 |
| 098h | OSCTUNE | — | — | TUN<5:0> | | | | | | --00 0000 | --00 0000 |
| 099h | OSCCON | SPLLEN | IRCF<3:0> | | | | — | SCS<1:0> | | 0011 1-00 | 0011 1-00 |
| 09Ah | OSCSTAT | SOSCR | PLLR | OSTS | HFIOFR | HFIOFL | MFIOFR | LFIOFR | HFIOFS | 00q0 --00 | qqqq --0q |
| 09Bh | ADRESL | ADC Result Register Low | | | | | | | | xxxx xxxx | uuuu uuuu |
| 09Ch | ADRESH | ADC Result Register High | | | | | | | | xxxx xxxx | uuuu uuuu |
| 09Dh | ADCON0 | — | CHS<4:0> | | | | | GO/DONE | ADON | -000 0000 | -000 0000 |
| 09Eh | ADCON1 | ADFM | ADCS<2:0> | | | — | — | ADPREF<1:0> | | 0000 --00 | 0000 --00 |
| 09Fh | ADCON2 | TRIGSEL<3:0> | | | | — | — | — | — | 0000 ---- | 0000 ---- |

**Legend:** x = unknown, u = unchanged, q = value depends on condition, - = unimplemented, read as '0', r = reserved. Shaded locations are unimplemented, read as '0'.

**Note 1:** Unimplemented, read as '1'.
**2:** PIC16(L)F1704 only.
**3:** PIC16(L)F1708 only.
**4:** Unimplemented on PIC16LF1704/8.


© 2013 Microchip Technology Inc.

chanhvinh.com



**TABLE 3-10: SPECIAL FUNCTION REGISTER SUMMARY (CONTINUED)**

| Addr | Name | Bit 7 | Bit 6 | Bit 5 | Bit 4 | Bit 3 | Bit 2 | Bit 1 | Bit 0 | Value on POR, BOR | Value on all other Resets |
|---|---|---|---|---|---|---|---|---|---|---|---|
| **Bank 2** | | | | | | | | | | | |
| 10Ch | LATA | — | — | LATA5 | LATA4 | — | LATA2 | LATA1 | LATA0 | --xx -xxx | --uu -uuu |
| 10Dh | LATB(4) | LATB7 | LATB6 | LATB5 | LATB4 | — | — | — | — | xxxx ---- | uuuu ---- |
| 10Eh | LATC | LATC7(4) | LATC6(4) | LATC5 | LATC4 | LATC3 | LATC2 | LATC1 | LATC0 | xxxx xxxx | uuuu uuuu |
| 10Fh | — | Unimplemented | | | | | | | | — | — |
| 110h | — | Unimplemented | | | | | | | | — | — |
| 111h | CM1CON0 | C1ON | C1OUT | — | C1POL | C1ZLF | C1SP | C1HYS | C1SYNC | 00-0 0100 | 00-0 0100 |
| 112h | CM1CON1 | C1INTP | C1INTN | C1PCH<2:0> | | | C1NCH<2:0> | | | 0000 0000 | 0000 0000 |
| 113h | CM2CON0 | C2ON | C2OUT | — | C2POL | C2ZLF | C2SP | C2HYS | C2SYNC | 00-0 0100 | 00-0 0100 |
| 114h | CM2CON1 | C2INTP | C2INTN | C2PCH<2:0> | | | C2NCH<2:0> | | | 0000 0000 | 0000 0000 |
| 115h | CMOUT | — | — | — | — | — | — | MC2OUT | MC1OUT | ---- --00 | ---- --00 |
| 116h | BORCON | SBOREN | BORFS | — | — | — | — | — | BORRDY | 1x-- ---q | uu-- ---u |
| 117h | FVRCON | FVREN | FVRRDY | TSEN | TSRNG | CDAFVR<1:0> | | ADFVR<1:0> | | 0q00 0000 | 0q00 0000 |
| 118h | DAC1CON0 | DAC1EN | --- | DAC1OE1 | DAC1OE2 | DAC1PSS<1:0> | | --- | DAC1NSS | 0-00 00-0 | 0-00 00-0 |
| 119h | DAC1CON1 | DAC1R<7:0> | | | | | | | | 0000 0000 | 0000 0000 |
| 11Ah | — | Unimplemented | | | | | | | | — | — |
| 11Bh | — | Unimplemented | | | | | | | | — | — |
| 11Ch | ZCD1CON | ZCD1EN | — | ZCD1OUT | ZCD1POL | — | — | ZCD1INTP | ZCD1INTN | 0-00 --00 | 0-00 --00 |
| 11Dh | — | Unimplemented | | | | | | | | — | — |
| 11Eh | — | Unimplemented | | | | | | | | — | — |
| 11Fh | — | Unimplemented | | | | | | | | — | — |
| **Bank 3** | | | | | | | | | | | |
| 18Ch | ANSELA | — | — | — | ANSA4 | — | ANSA2 | ANSA1 | ANSA0 | ---1 1111 | ---1 1111 |
| 18Dh | ANSELB(4) | — | — | ANSB5 | ANSB4 | — | — | — | — | --11 ---- | --11 ---- |
| 18Eh | ANSELC | ANSC7(4) | ANSC6(4) | ANSC5(3) | ANSC4(3) | ANSC3 | ANSC2 | ANSC1 | ANSC0 | 1111 1111 | 1111 1111 |
| 18Fh | — | Unimplemented | | | | | | | | — | — |
| 190h | — | Unimplemented | | | | | | | | — | — |
| 191h | PMADRL | Program Memory Address Register Low Byte | | | | | | | | 0000 0000 | 0000 0000 |
| 192h | PMADRH | —(2) | Program Memory Address Register High Byte | | | | | | | 1000 0000 | 1000 0000 |
| 193h | PMDATL | Program Memory Read Data Register Low Byte | | | | | | | | xxxx xxxx | uuuu uuuu |
| 194h | PMDATH | — | — | Program Memory Read Data Register High Byte | | | | | | --xx xxxx | --uu uuuu |
| 195h | PMCON1 | — | CFGS | LWLO | FREE | WRERR | WREN | WR | RD | -000 x000 | -000 q000 |
| 196h | PMCON2 | Program Memory Control Register 2 | | | | | | | | 0000 0000 | 0000 0000 |
| 197h | VREGCON(5) | — | — | — | — | — | — | VREGPM | Reserved | ---- --01 | ---- --01 |
| 198h | — | Unimplemented | | | | | | | | — | — |
| 199h | RC1REG | USART Receive Data Register | | | | | | | | 0000 0000 | 0000 0000 |
| 19Ah | TX1REG | USART Transmit Data Register | | | | | | | | 0000 0000 | 0000 0000 |
| 19Bh | SP1BRGL | BRG<7:0> | | | | | | | | 0000 0000 | 0000 0000 |
| 19Ch | SP1BRGH | BRG<15:8> | | | | | | | | 0000 0000 | 0000 0000 |
| 19Dh | RC1STA | SPEN | RX9 | SREN | CREN | ADDEN | FERR | OERR | RX9D | 0000 0000 | 0000 0000 |
| 19Eh | TX1STA | CSRC | TX9 | TXEN | SYNC | SENDB | BRGH | TRMT | TX9D | 0000 0010 | 0000 0010 |
| 19Fh | BAUD1CON | ABDOVF | RCIDL | — | SCKP | BRG16 | — | WUE | ABDEN | 01-0 0-00 | 01-0 0-00 |

**Legend:** x = unknown, u = unchanged, q = value depends on condition, - = unimplemented, read as '0', r = reserved. Shaded locations are unimplemented, read as '0'.

**Note 1:** Unimplemented, read as '1'.
**2:** PIC16(L)F1704 only.
**3:** PIC16(L)F1708 only.
**4:** Unimplemented on PIC16LF1704/8.

chanhvinh.com



**TABLE 3-10: SPECIAL FUNCTION REGISTER SUMMARY (CONTINUED)**

| Addr | Name | Bit 7 | Bit 6 | Bit 5 | Bit 4 | Bit 3 | Bit 2 | Bit 1 | Bit 0 | Value on POR, BOR | Value on all other Resets |
|---|---|---|---|---|---|---|---|---|---|---|---|
| **Bank 4** | | | | | | | | | | | |
| 20Ch | WPUA | — | — | WPUA5 | WPUA4 | WPUA3 | WPUA2 | WPUA1 | WPUA0 | --11 1111 | --11 1111 |
| 20Dh | WPUB(4) | WPUB7 | WPUB6 | WPUB5 | WPUB4 | — | — | — | — | 1111 ---- | 1111 ---- |
| 20Eh | WPUC | WPUC7(4) | WPUC6(4) | WPUC5 | WPUC4 | WPUC3 | WPUC2 | WPUC1 | WPUC0 | 1111 1111 | 1111 1111 |
| 20Fh | — | Unimplemented | | | | | | | | — | — |
| 210h | — | Unimplemented | | | | | | | | — | — |
| 211h | SSP1BUF | Synchronous Serial Port Receive Buffer/Transmit Register | | | | | | | | xxxx xxxx | uuuu uuuu |
| 212h | SSP1ADD | ADD<7:0> | | | | | | | | 0000 0000 | 0000 0000 |
| 213h | SSP1MSK | MSK<7:0> | | | | | | | | 1111 1111 | 1111 1111 |
| 214h | SSP1STAT | SMP | CKE | D/$\overline{A}$ | P | S | R/$\overline{W}$ | UA | BF | 0000 0000 | 0000 0000 |
| 215h | SSP1CON1 | WCOL | SSPOV | SSPEN | CKP | SSPM<3:0> | | | | 0000 0000 | 0000 0000 |
| 216h | SSP1CON2 | GCEN | ACKSTAT | ACKDT | ACKEN | RCEN | PEN | RSEN | SEN | 0000 0000 | 0000 0000 |
| 217h | SSP1CON3 | ACKTIM | PCIE | SCIE | BOEN | SDAHT | SBCDE | AHEN | DHEN | 0000 0000 | 0000 0000 |
| 218h — 21Fh | — | Unimplemented | | | | | | | | — | — |
| **Bank 5** | | | | | | | | | | | |
| 28Ch | ODCONA | — | — | ODA5 | ODA4 | — | ODA2 | ODA1 | ODA0 | --00 -000 | --00 -000 |
| 28Dh | ODCONB(4) | ODB7 | ODB6 | ODB5 | ODB4 | — | — | — | — | 0000 ---- | 0000 ---- |
| 28Eh | ODCONC | ODC7(4) | ODC6(4) | ODC5 | ODC4 | ODC3 | ODC2 | ODC1 | ODC0 | 0000 0000 | 0000 0000 |
| 28Fh | — | Unimplemented | | | | | | | | — | — |
| 290h | — | Unimplemented | | | | | | | | — | — |
| 291h | CCPR1L | Capture/Compare/PWM Register 1 (LSB) | | | | | | | | xxxx xxxx | uuuu uuuu |
| 292h | CCPR1H | Capture/Compare/PWM Register 1 (MSB) | | | | | | | | xxxx xxxx | uuuu uuuu |
| 293h | CCP1CON | — | — | DC1B<1:0> | | CCP1M<3:0> | | | | --00 0000 | --00 0000 |
| 294h — 297h | — | Unimplemented | | | | | | | | — | — |
| 298h | CCPR2L | Capture/Compare/PWM Register 2 (LSB) | | | | | | | | xxxx xxxx | uuuu uuuu |
| 299h | CCPR2H | Capture/Compare/PWM Register 2 (MSB) | | | | | | | | xxxx xxxx | uuuu uuuu |
| 29Ah | CCP2CON | — | — | DC2B<1:0> | | CCP2M<3:0> | | | | --00 0000 | --00 0000 |
| 29Bh — 29Dh | — | Unimplemented | | | | | | | | — | — |
| 29Eh | CCPTMRS | P4TSEL<1:0> | | P3TSEL<1:0> | | C2TSEL<1:0> | | C1TSEL<1:0> | | 0000 0000 | 0000 0000 |
| 29Fh | — | Unimplemented | | | | | | | | — | — |
| **Bank 6** | | | | | | | | | | | |
| 30Ch | SLRCONA | — | — | SLRA5 | SLRA4 | — | SLRA2 | SLRA1 | SLRA0 | --00 -000 | --00 -000 |
| 30Dh | SLRCONB(4) | SLRB7 | SLRB6 | SLRB5 | SLRB4 | — | — | — | — | 0000 ---- | 0000 ---- |
| 30Eh | SLRCONC | SLRC7(4) | SLRC6(4) | SLRC5 | SLRC4 | SLRC3 | SLRC2 | SLRC1 | SLRC0 | 0000 0000 | 0000 0000 |
| 30Fh — 31Fh | — | Unimplemented | | | | | | | | — | — |

**Legend:** x = unknown, u = unchanged, q = value depends on condition, - = unimplemented, read as '0', r = reserved. Shaded locations are unimplemented, read as '0'.

**Note 1:** Unimplemented, read as '1'.
**2:** PIC16(L)F1704 only.
**3:** PIC16(L)F1708 only.
**4:** Unimplemented on PIC16LF1704/8.

 © 2013 Microchip Technology Inc.

chanhvinh.com



**TABLE 3-10: SPECIAL FUNCTION REGISTER SUMMARY (CONTINUED)**

| Addr | Name | Bit 7 | Bit 6 | Bit 5 | Bit 4 | Bit 3 | Bit 2 | Bit 1 | Bit 0 | Value on POR, BOR | Value on all other Resets |
|---|---|---|---|---|---|---|---|---|---|---|---|
| **Bank 7** | | | | | | | | | | | |
| 38Ch | INLVLA | — | — | INLVLA5 | INLVLA4 | INLVLA3 | INLVLA2 | INLVLA1 | INLVLA0 | --11 1111 | --11 1111 |
| 38Dh | INLVLB(4) | INLVLB7 | INLVLB6 | INLVLB5 | INLVLB4 | — | — | — | — | 1111 ---- | 1111 ---- |
| 38Eh | INLVLC | INLVLC7(4) | INLVLC6(4) | INLVLC5 | INLVLC4 | INLVLC3 | INLVLC2 | INLVLC1 | INLVLC0 | 1111 1111 | 1111 1111 |
| 38Fh | — | Unimplemented | | | | | | | | — | — |
| 390h | — | Unimplemented | | | | | | | | — | — |
| 391h | IOCAP | — | — | IOCAP5 | IOCAP4 | IOCAP3 | IOCAP2 | IOCAP1 | IOCAP0 | --00 0000 | --00 0000 |
| 392h | IOCAN | — | — | IOCAN5 | IOCAN4 | IOCAN3 | IOCAN2 | IOCAN1 | IOCAN0 | --00 0000 | --00 0000 |
| 393h | IOCAF | — | — | IOCAF5 | IOCAF4 | IOCAF3 | IOCAF2 | IOCAF1 | IOCAF0 | --00 0000 | --00 0000 |
| 394h | IOCBP(4) | IOCBP7 | IOCBP6 | IOCBP5 | IOCBP4 | — | — | — | — | 0000 ---- | 0000 ---- |
| 395h | IOCBN(4) | IOCBN7 | IOCBN6 | IOCBN5 | IOCBN4 | — | — | — | — | 0000 ---- | 0000 ---- |
| 396h | IOCBF(4) | IOCBF7 | IOCBF6 | IOCBF5 | IOCBF4 | — | — | — | — | 0000 ---- | 0000 ---- |
| 397h | IOCCP | IOCCP7(4) | IOCCP6(4) | IOCCP5 | IOCCP4 | IOCCP3 | IOCCP2 | IIOCCP1 | IOCCP0 | 0000 0000 | 0000 0000 |
| 398h | IOCCN | IOCCN7(4) | IOCCN6(4) | IOCCN5 | IOCCN4 | IOCCN3 | IOCCN2 | IIOCCN1 | IOCCN0 | 0000 0000 | 0000 0000 |
| 399h | IOCCF | IOCCF7(4) | IOCCF6(4) | IOCCF5 | IOCCF4 | IOCCF3 | IOCCF2 | IIOCCF1 | IOCCF0 | 0000 0000 | 0000 0000 |
| 39Ah — 39Fh | — | Unimplemented | | | | | | | | — | — |
| **Bank 8** | | | | | | | | | | | |
| 40Ch — 414h | — | Unimplemented | | | | | | | | — | — |
| 415h | TMR4 | Holding Register for the Least Significant Byte of the 16-bit TMR4 Register | | | | | | | | xxxx xxxx | uuuu uuuu |
| 416h | PR4 | Holding Register for the Most Significant Byte of the 16-bit TMR4 Register | | | | | | | | xxxx xxxx | uuuu uuuu |
| 417h | T4CON | — | T4OUTPS<3:0> | | | | TMR4ON | T4CKPS<1:0> | | -000 0000 | -000 0000 |
| 418h — 41Bh | — | Unimplemented | | | | | | | | — | — |
| 41Ch | TMR6 | Holding Register for the Least Significant Byte of the 16-bit TMR6 Register | | | | | | | | xxxx xxxx | uuuu uuuu |
| 41Dh | PR6 | Holding Register for the Most Significant Byte of the 16-bit TMR6 Register | | | | | | | | xxxx xxxx | uuuu uuuu |
| 41Eh | T6CON | — | T6OUTPS<3:0> | | | | TMR6ON | T6CKPS<1:0> | | -000 0000 | -000 0000 |
| 41Fh | — | Unimplemented | | | | | | | | — | — |
| **Bank 9** | | | | | | | | | | | |
| 48Ch to 49Fh | — | Unimplemented | | | | | | | | — | — |
| **Bank 10** | | | | | | | | | | | |
| 50Ch — 510h | — | Unimplemented | | | | | | | | — | — |
| 511h | OPA1CON | OPA1EN | OPA1SP | — | OPA1UG | — | — | OPA1PCH<1:0> | | 00-0 --00 | 00-0 --00 |
| 512h — 514h | — | Unimplemented | | | | | | | | — | — |
| 515h | OPA2CON | OPA2EN | OPA2SP | — | OPA2UG | — | — | OPA2PCH<1:0> | | 00-0 --00 | 00-0 --00 |
| 516h — 51Fh | — | Unimplemented | | | | | | | | — | — |

**Legend:** x = unknown, u = unchanged, q = value depends on condition, - = unimplemented, read as '0', r = reserved. Shaded locations are unimplemented, read as '0'.

**Note 1:** Unimplemented, read as '1'.
**2:** PIC16(L)F1704 only.
**3:** PIC16(L)F1708 only.
**4:** Unimplemented on PIC16LF1704/8.

chanhvinh.com



**TABLE 3-10: SPECIAL FUNCTION REGISTER SUMMARY (CONTINUED)**

| Addr | Name | Bit 7 | Bit 6 | Bit 5 | Bit 4 | Bit 3 | Bit 2 | Bit 1 | Bit 0 | Value on POR, BOR | Value on all other Resets |
|---|---|---|---|---|---|---|---|---|---|---|---|
| **Bank 11** | | | | | | | | | | | |
| D8Ch to DADh | — | Unimplemented | | | | | | | | — | — |
| **Bank 12** | | | | | | | | | | | |
| 60Ch to 616h | — | Unimplemented | | | | | | | | — | — |
| 617h | PWM3DCL | PWM3DC<1:0> | | — | — | — | — | — | — | xx-- ---- | uu-- ---- |
| 618h | PWM3DCH | PWM3DC<9:2> | | | | | | | | xxxx xxxx | uuuu uuuu |
| 619h | PWM3CON | PWM3EN | — | PWM3OUT | PWM3POL | — | — | — | — | 0-x0 ---- | u-uu ---- |
| 61Ah | PWM4DCL | PWM4DC<1:0> | | — | — | — | — | — | — | 00-- ---- | uu-- ---- |
| 61Bh | PWM4DCH | PWM4DC<9:2> | | | | | | | | 0000 0000 | uuuu uuuu |
| 61Ch | PWM4CON | PWM4EN | — | PWM4OUT | PWM4POL | — | — | — | — | 0-x0 ---- | u-uu ---- |
| 61Dh — 61Fh | — | Unimplemented | | | | | | | | — | — |
| **Bank 13** | | | | | | | | | | | |
| 68Ch to 690h | — | Unimplemented | | | | | | | | — | — |
| 691h | COG1PHR | — | — | COG Rising Edge Phase Counter Register | | | | | | --xx xxxx | --uu uuuu |
| 692h | COG1PHF | — | — | COG Falling Edge Phase Counter Register | | | | | | --xx xxxx | --uu uuuu |
| 693h | COG1BLKR | — | — | COG Rising Edge Blanking Counter Register | | | | | | --xx xxxx | --uu uuuu |
| 694h | COG1BLKF | — | — | COG Falling Edge Blanking Counter Register | | | | | | --xx xxxx | --uu uuuu |
| 695h | COG1DBR | — | — | COG Rising Edge Dead-band Counter Register | | | | | | --xx xxxx | --uu uuuu |
| 696h | COG1DBF | — | — | COG Falling Edge Dead-band Counter Register | | | | | | --xx xxxx | --uu uuuu |
| 697h | COG1CON0 | G1EN | G1LD | — | G1CS<1:0> | | G1MD<2:0> | | | 00-0 0000 | 00-0 0000 |
| 698h | COG1CON1 | G1RDBS | G1FDBS | — | — | G1POLD | G1POLC | G1POLB | G1POLA | 00-- 0000 | 00-- 0000 |
| 699h | COG1RIS | — | G1RIS6 | G1RIS5 | G1RIS4 | G1RIS3 | G1RIS2 | G1RIS1 | G1RIS0 | -000 0000 | -000 0000 |
| 69Ah | COG1RSIM | — | G1RSIM6 | G1RSIM5 | G1RSIM4 | G1RSIM3 | G1RSIM2 | G1RSIM1 | G1RSIM0 | -000 0000 | -000 0000 |
| 69Bh | COG1FIS | — | G1FIS6 | G1FIS5 | G1FIS4 | G1FIS3 | G1FIS2 | G1FIS1 | G1FIS0 | -000 0000 | -000 0000 |
| 69Ch | COG1FSIM | — | G1FSIM6 | G1FSIM5 | G1FSIM4 | G1FSIM3 | G1FSIM2 | G1FSIM1 | G1FSIM0 | -000 0000 | -000 0000 |
| 69Dh | COG1ASD0 | G1ASE | G1ARSEN | G1ASDBD<1:0> | | G1ASDAC<1:0> | | — | — | 0001 01-- | 0001 01-- |
| 69Eh | COG1ASD1 | — | — | — | — | G1AS3E | G1AS2E | G1AS1E | G1AS0E | ---- 0000 | ---- 0000 |
| 69Fh | COG1STR | G1SDATD | G1SDATC | G1SDATB | G1SDATA | G1STRD | G1STRC | G1STRB | G1STRA | 0000 0001 | 0000 0001 |
| **Bank 14-27** | | | | | | | | | | | |
| x0Ch/ x8Ch — x1Fh/ x9Fh | — | Unimplemented | | | | | | | | — | — |

**Legend:** x = unknown, u = unchanged, q = value depends on condition, - = unimplemented, read as '0', r = reserved. Shaded locations are unimplemented, read as '0'.

**Note 1:** Unimplemented, read as '1'.
**2:** PIC16(L)F1704 only.
**3:** PIC16(L)F1708 only.
**4:** Unimplemented on PIC16LF1704/8.

 © 2013 Microchip Technology Inc.

chanhvinh.com



**TABLE 3-10: SPECIAL FUNCTION REGISTER SUMMARY (CONTINUED)**

| Addr | Name | Bit 7 | Bit 6 | Bit 5 | Bit 4 | Bit 3 | Bit 2 | Bit 1 | Bit 0 | Value on POR, BOR | Value on all other Resets |
|---|---|---|---|---|---|---|---|---|---|---|---|
| **Bank 28** | | | | | | | | | | | |
| E0Ch — E0Eh | — | Unimplemented | | | | | | | | — | — |
| E0Fh | PPSLOCK | — | — | — | — | — | — | — | PPSLOCKED | ---- ---0 | ---- ---0 |
| E10h | INTPPS | — | — | — | INTPPS<4:0> | | | | | ---0 0010 | ---u uuuu |
| E11h | T0CKIPPS | — | — | — | T0CKIPPS<4:0> | | | | | ---0 0010 | ---u uuuu |
| E12h | T1CKIPPS | — | — | — | T1CKIPPS<4:0> | | | | | ---0 0101 | ---u uuuu |
| E13h | T1GPPS | — | — | — | T1GPPS<4:0> | | | | | ---0 0100 | ---u uuuu |
| E14h | CCP1PPS | — | — | — | CCP1PPS<4:0> | | | | | ---1 0101 | ---u uuuu |
| E15h | CCP2PPS | — | — | — | CCP2PPS<4:0> | | | | | ---1 0011 | ---u uuuu |
| E16h | — | Unimplemented | | | | | | | | — | — |
| E17h | COGINPPS | — | — | — | COGINPPS<4:0> | | | | | ---0 0010 | ---u uuuu |
| E18h — E1Fh | — | Unimplemented | | | | | | | | — | — |
| E20h | SSPCLKPPS | — | — | — | SSPCLKPPS<4:0> | | | | | ---1 0000 (3) | ---u uuuu |
| | | — | — | — | SSPCLKPPS<4:0> | | | | | ---0 1110 (4) | ---u uuuu |
| E21h | SSPDATPPS | — | — | — | SSPDATPPS<4:0> | | | | | ---1 0001 (3) | ---u uuuu |
| | | — | — | — | SSPDATPPS<4:0> | | | | | ---0 1100 (4) | ---u uuuu |
| E22h | SSPSSPPS | — | — | — | SSPSSPPS<4:0> | | | | | ---1 0011 (3) | ---u uuuu |
| | | — | — | — | SSPSSPPS<4:0> | | | | | ---1 0110 (4) | ---u uuuu |
| E23h | — | Unimplemented | | | | | | | | — | — |
| E24h | RXPPS | — | — | — | RXPPS<4:0> | | | | | ---1 0101 (3) | ---u uuuu |
| | | — | — | — | RXPPS<4:0> | | | | | ---0 1101 (4) | ---u uuuu |
| E25h | CKPPS | — | — | — | CKPPS<4:0> | | | | | ---1 0100 (3) | ---u uuuu |
| | | — | — | — | CKPPS<4:0> | | | | | ---0 1111 (4) | ---u uuuu |
| E26h | — | Unimplemented | | | | | | | | — | — |
| E27h | — | Unimplemented | | | | | | | | — | — |
| E28h | CLCIN0PPS | — | — | — | CLCIN0PPS<4:0> | | | | | ---1 0011 | ---u uuuu |
| E29h | CLCIN1PPS | — | — | — | CLCIN1PPS<4:0> | | | | | ---1 0100 | ---u uuuu |
| E2Ah | CLCIN2PPS | — | — | — | CLCIN2PPS<4:0> | | | | | ---1 0001 | ---u uuuu |
| E2Bh | CLCIN3PPS | — | — | — | CLCIN3PPS<4:0> | | | | | ---0 0101 | ---u uuuu |
| E2Ch to E7Fh | — | Unimplemented | | | | | | | | — | — |

**Legend:** x = unknown, u = unchanged, q = value depends on condition, - = unimplemented, read as '0', r = reserved. Shaded locations are unimplemented, read as '0'.

**Note 1:** Unimplemented, read as '1'.
**2:** PIC16(L)F1704 only.
**3:** PIC16(L)F1708 only.
**4:** Unimplemented on PIC16LF1704/8.

chanhvinh.com



**TABLE 3-10: SPECIAL FUNCTION REGISTER SUMMARY (CONTINUED)**

| Addr | Name | Bit 7 | Bit 6 | Bit 5 | Bit 4 | Bit 3 | Bit 2 | Bit 1 | Bit 0 | Value on POR, BOR | Value on all other Resets |
|---|---|---|---|---|---|---|---|---|---|---|---|
| **Bank 29** | | | | | | | | | | | |
| E8Ch — E8Fh | — | Unimplemented | | | | | | | | — | — |
| E90h | RA0PPS | — | — | — | RA0PPS<4:0> | | | | | ---0 0000 | ---u uuuu |
| E91h | RA1PPS | — | — | — | RA1PPS<4:0> | | | | | ---0 0000 | ---u uuuu |
| E92h | RA2PPS | — | — | — | RA2PPS<4:0> | | | | | ---0 0000 | ---u uuuu |
| E93h | — | Unimplemented | | | | | | | | — | — |
| E94h | RA4PPS | — | — | — | RA4PPS<4:0> | | | | | ---0 0000 | ---u uuuu |
| E95h | RA5PPS | — | — | — | RA5PPS<4:0> | | | | | ---0 0000 | ---u uuuu |
| E96h | — | Unimplemented | | | | | | | | — | — |
| E97h | — | Unimplemented | | | | | | | | — | — |
| E98h | — | Unimplemented | | | | | | | | — | — |
| E99h | — | Unimplemented | | | | | | | | — | — |
| E9Ah | — | Unimplemented | | | | | | | | — | — |
| E9Bh | — | Unimplemented | | | | | | | | — | — |
| E9Ch | RB4PPS(4) | — | — | — | RB4PPS<4:0> | | | | | ---0 0000 | ---u uuuu |
| E9Dh | RB5PPS(4) | — | — | — | RB5PPS<4:0> | | | | | ---0 0000 | ---u uuuu |
| E9Eh | RB6PPS(4) | — | — | — | RB6PPS<4:0> | | | | | ---0 0000 | ---u uuuu |
| E9Fh | RB7PPS(4) | — | — | — | RB7PPS<4:0> | | | | | ---0 0000 | ---u uuuu |
| EA0h | RC0PPS | — | — | — | RC0PPS<4:0> | | | | | ---0 0000 | ---u uuuu |
| EA1h | RC1PPS | — | — | — | RC1PPS<4:0> | | | | | ---0 0000 | ---u uuuu |
| EA2h | RC2PPS | — | — | — | RC2PPS<4:0> | | | | | ---0 0000 | ---u uuuu |
| EA3h | RC3PPS | — | — | — | RC3PPS<4:0> | | | | | ---0 0000 | ---u uuuu |
| EA4h | RC4PPS | — | — | — | RC4PPS<4:0> | | | | | ---0 0000 | ---u uuuu |
| EA5h | RC5PPS | — | — | — | RC5PPS<4:0> | | | | | ---0 0000 | ---u uuuu |
| EA6h | RC6PPS(4) | — | — | — | RC6PPS<4:0> | | | | | ---0 0000 | ---u uuuu |
| EA7h | RC7PPS(4) | — | — | — | RC7PPS<4:0> | | | | | ---0 0000 | ---u uuuu |
| EA8h — EEFh | — | Unimplemented | | | | | | | | — | — |

**Legend:** x = unknown, u = unchanged, q = value depends on condition, - = unimplemented, read as '0', r = reserved. Shaded locations are unimplemented, read as '0'.

**Note 1:** Unimplemented, read as '1'.
**2:** PIC16(L)F1704 only.
**3:** PIC16(L)F1708 only.
**4:** Unimplemented on PIC16LF1704/8.

 © 2013 Microchip Technology Inc.

chanhvinh.com



**TABLE 3-10: SPECIAL FUNCTION REGISTER SUMMARY (CONTINUED)**

| Addr | Name | Bit 7 | Bit 6 | Bit 5 | Bit 4 | Bit 3 | Bit 2 | Bit 1 | Bit 0 | Value on POR, BOR | Value on all other Resets |
|---|---|---|---|---|---|---|---|---|---|---|---|
| **Bank 30** | | | | | | | | | | | |
| F0Ch — F0Eh | — | Unimplemented | | | | | | | | — | — |
| F0Fh | CLCDATA | — | — | — | — | — | MLC3OUT | MLC2OUT | MLC1OUT | ---- -000 | ---- -000 |
| F10h | CLC1CON | LC1EN | — | LC1OUT | LC1INTP | LC1INTN | LC1MODE<2:0> | | | 0-x0 0000 | 0-00 0000 |
| F11h | CLC1POL | LC1POL | — | — | — | LC1G4POL | LC1G3POL | LC1G2POL | LC1G1POL | x--- xxxx | 0--- uuuu |
| F12h | CLC1SEL0 | — | — | — | LC1D1S<4:0> | | | | | ---x xxxx | ---u uuuu |
| F13h | CLC1SEL1 | — | — | — | LC1D2S<4:0> | | | | | ---x xxxx | ---u uuuu |
| F14h | CLC1SEL2 | — | — | — | LC1D3S<4:0> | | | | | ---x xxxx | ---u uuuu |
| F15h | CLC1SEL3 | — | — | — | LC1D4S<4:0> | | | | | ---x xxxx | ---u uuuu |
| F16h | CLC1GLS0 | LC1G1D4T | LC1G1D4N | LC1G1D3T | LC1G1D3N | LC1G1D2T | LC1G1D2N | LC1G1D1T | LC1G1D1N | xxxx xxxx | uuuu uuuu |
| F17h | CLC1GLS1 | LC1G2D4T | LC1G2D4N | LC1G2D3T | LC1G2D3N | LC1G2D2T | LC1G2D2N | LC1G2D1T | LC1G2D1N | xxxx xxxx | uuuu uuuu |
| F18h | CLC1GLS2 | LC1G3D4T | LC1G3D4N | LC1G3D3T | LC1G3D3N | LC1G3D2T | LC1G3D2N | LC1G3D1T | LC1G3D1N | xxxx xxxx | uuuu uuuu |
| F19h | CLC1GLS3 | LC1G4D4T | LC1G4D4N | LC1G4D3T | LC1G4D3N | LC1G4D2T | LC1G4D2N | LC1G4D1T | LC1G4D1N | xxxx xxxx | uuuu uuuu |
| F1Ah | CLC2CON | LC2EN | — | LC2OUT | LC2INTP | LC2INTN | LC2MODE<2:0> | | | 0-00 0000 | 0-00 0000 |
| F1Bh | CLC2POL | LC2POL | — | — | — | LC2G4POL | LC2G3POL | LC2G2POL | LC2G1POL | 0--- xxxx | 0--- uuuu |
| F1Ch | CLC2SEL0 | — | — | — | LC2D1S<4:0> | | | | | ---x xxxx | ---u uuuu |
| F1Dh | CLC2SEL1 | — | — | — | LC2D2S<4:0> | | | | | ---x xxxx | ---u uuuu |
| F1Eh | CLC2SEL2 | — | — | — | LC2D3S<4:0> | | | | | ---x xxxx | ---u uuuu |
| F1Fh | CLC2SEL3 | — | — | — | LC2D4S<4:0> | | | | | ---x xxxx | ---u uuuu |
| F20h | CLC2GLS0 | LC2G1D4T | LC2G1D4N | LC2G1D3T | LC2G1D3N | LC2G1D2T | LC2G1D2N | LC2G1D1T | LC2G1D1N | xxxx xxxx | uuuu uuuu |
| F21h | CLC2GLS1 | LC2G2D4T | LC2G2D4N | LC2G2D3T | LC2G2D3N | LC2G2D2T | LC2G2D2N | LC2G2D1T | LC2G2D1N | xxxx xxxx | uuuu uuuu |
| F22h | CLC2GLS2 | LC2G3D4T | LC2G3D4N | LC2G3D3T | LC2G3D3N | LC2G3D2T | LC2G3D2N | LC2G3D1T | LC2G3D1N | xxxx xxxx | uuuu uuuu |
| F23h | CLC2GLS3 | LC2G4D4T | LC2G4D4N | LC2G4D3T | LC2G4D3N | LC2G4D2T | LC2G4D2N | LC2G4D1T | LC2G4D1N | xxxx xxxx | uuuu uuuu |
| F24h | CLC3CON | LC3EN | — | LC3OUT | LC3INTP | LC3INTN | LC3MODE<2:0> | | | 0-00 0000 | 0-00 0000 |
| F25h | CLC3POL | LC3POL | — | — | — | LC3G4POL | LC3G3POL | LC3G2POL | LC3G1POL | 0--- xxxx | 0--- uuuu |
| F26h | CLC3SEL0 | — | — | — | LC3D1S<4:0> | | | | | ---x xxxx | ---u uuuu |
| F27h | CLC3SEL1 | — | — | — | LC3D2S<4:0> | | | | | ---x xxxx | ---u uuuu |
| F28h | CLC3SEL2 | — | — | — | LC3D3S<4:0> | | | | | ---x xxxx | ---u uuuu |
| F29h | CLC3SEL3 | — | — | — | LC3D4S<4:0> | | | | | ---x xxxx | ---u uuuu |
| F2Ah | CLC3GLS0 | LC3G1D4T | LC3G1D4N | LC3G1D3T | LC3G1D3N | LC3G1D2T | LC3G1D2N | LC3G1D1T | LC3G1D1N | xxxx xxxx | uuuu uuuu |
| F2Bh | CLC3GLS1 | LC3G2D4T | LC3G2D4N | LC3G2D3T | LC3G2D3N | LC3G2D2T | LC3G2D2N | LC3G2D1T | LC3G2D1N | xxxx xxxx | uuuu uuuu |
| F2Ch | CLC3GLS2 | LC3G3D4T | LC3G3D4N | LC3G3D3T | LC3G3D3N | LC3G3D2T | LC3G3D2N | LC3G3D1T | LC3G3D1N | xxxx xxxx | uuuu uuuu |
| F2Dh | CLC3GLS3 | LC3G4D4T | LC3G4D4N | LC3G4D3T | LC3G4D3N | LC3G4D2T | LC3G4D2N | LC3G4D1T | LC3G4D1N | xxxx xxxx | uuuu uuuu |
| F2Eh — F6Fh | — | Unimplemented | | | | | | | | — | — |

**Legend:** x = unknown, u = unchanged, q = value depends on condition, - = unimplemented, read as '0', r = reserved. Shaded locations are unimplemented, read as '0'.

**Note 1:** Unimplemented, read as '1'.
**2:** PIC16(L)F1704 only.
**3:** PIC16(L)F1708 only.
**4:** Unimplemented on PIC16LF1704/8.

chanhvinh.com



**TABLE 3-10: SPECIAL FUNCTION REGISTER SUMMARY (CONTINUED)**

| Addr | Name | Bit 7 | Bit 6 | Bit 5 | Bit 4 | Bit 3 | Bit 2 | Bit 1 | Bit 0 | Value on POR, BOR | Value on all other Resets |
|---|---|---|---|---|---|---|---|---|---|---|---|
| **Bank 31** | | | | | | | | | | | |
| F8Ch to FE3h | — | Unimplemented | | | | | | | | — | — |
| FE4h | STATUS_SHAD | — | — | — | — | — | Z | DC | C | ---- -xxx | ---- -uuu |
| FE5h | WREG_SHAD | Working Register Shadow | | | | | | | | xxxx xxxx | uuuu uuuu |
| FE6h | BSR_SHAD | — | — | — | Bank Select Register Shadow | | | | | ---x xxxx | ---u uuuu |
| FE7h | PCLATH_SHAD | — | Program Counter Latch High Register Shadow | | | | | | | -xxx xxxx | uuuu uuuu |
| FE8h | FSR0L_SHAD | Indirect Data Memory Address 0 Low Pointer Shadow | | | | | | | | xxxx xxxx | uuuu uuuu |
| FE9h | FSR0H_SHAD | Indirect Data Memory Address 0 High Pointer Shadow | | | | | | | | xxxx xxxx | uuuu uuuu |
| FEAh | FSR1L_SHAD | Indirect Data Memory Address 1 Low Pointer Shadow | | | | | | | | xxxx xxxx | uuuu uuuu |
| FEBh | FSR1H_SHAD | Indirect Data Memory Address 1 High Pointer Shadow | | | | | | | | xxxx xxxx | uuuu uuuu |
| FECh | — | Unimplemented | | | | | | | | — | — |
| FEDh | STKPTR | — | — | — | Current Stack Pointer | | | | | ---1 1111 | ---1 1111 |
| FEEh | TOSL | Top of Stack Low byte | | | | | | | | xxxx xxxx | uuuu uuuu |
| FEFh | TOSH | — | Top of Stack High byte | | | | | | | -xxx xxxx | -uuu uuuu |

**Legend:** x = unknown, u = unchanged, q = value depends on condition, - = unimplemented, read as '0', r = reserved. Shaded locations are unimplemented, read as '0'.

**Note 1:** Unimplemented, read as '1'.
**2:** PIC16(L)F1704 only.
**3:** PIC16(L)F1708 only.
**4:** Unimplemented on PIC16LF1704/8.

 © 2013 Microchip Technology Inc.

chanhvinh.com



## 3.4 PCL and PCLATH

The Program Counter (PC) is 15 bits wide. The low byte comes from the PCL register, which is a readable and writable register. The high byte (PC<14:8>) is not directly readable or writable and comes from PCLATH. On any Reset, the PC is cleared. Figure 3-3 shows the five situations for the loading of the PC.

**FIGURE 3-3: LOADING OF PC IN DIFFERENT SITUATIONS**

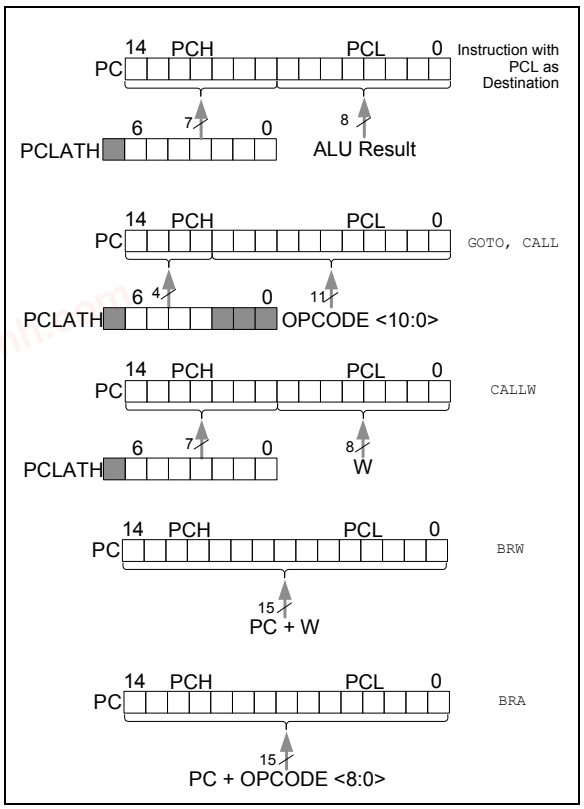


### 3.4.1 MODIFYING PCL

Executing any instruction with the PCL register as the destination simultaneously causes the Program Counter PC<14:8> bits (PCH) to be replaced by the contents of the PCLATH register. This allows the entire contents of the program counter to be changed by writing the desired upper seven bits to the PCLATH register. When the lower eight bits are written to the PCL register, all 15 bits of the program counter will change to the values contained in the PCLATH register and those being written to the PCL register.

### 3.4.2 COMPUTED GOTO

A computed GOTO is accomplished by adding an offset to the program counter (ADDWF PCL). When performing a table read using a computed GOTO method, care should be exercised if the table location crosses a PCL memory boundary (each 256-byte block). Refer to Application Note AN556, *"Implementing a Table Read"* (DS00556).

### 3.4.3 COMPUTED FUNCTION CALLS

A computed function CALL allows programs to maintain tables of functions and provide another way to execute state machines or look-up tables. When performing a table read using a computed function CALL, care should be exercised if the table location crosses a PCL memory boundary (each 256-byte block).

If using the CALL instruction, the PCH<2:0> and PCL registers are loaded with the operand of the CALL instruction. PCH<6:3> is loaded with PCLATH<6:3>.

The CALLW instruction enables computed calls by combining PCLATH and W to form the destination address. A computed CALLW is accomplished by loading the W register with the desired address and executing CALLW. The PCL register is loaded with the value of W and PCH is loaded with PCLATH.

### 3.4.4 BRANCHING

The branching instructions add an offset to the PC. This allows relocatable code and code that crosses page boundaries. There are two forms of branching, BRW and BRA. The PC will have incremented to fetch the next instruction in both cases. When using either branching instruction, a PCL memory boundary may be crossed.

If using BRW, load the W register with the desired unsigned address and execute BRW. The entire PC will be loaded with the address PC + 1 + W.

If using BRA, the entire PC will be loaded with PC + 1 +, the signed value of the operand of the BRA instruction.

chanhvinh.com



## 3.5 Stack

All devices have a 16-level x 15-bit wide hardware stack (refer to Figure 3-1). The stack space is not part of either program or data space. The PC is PUSHed onto the stack when CALL or CALLW instructions are executed or an interrupt causes a branch. The stack is POPed in the event of a RETURN, RETLW or a RETFIE instruction execution. PCLATH is not affected by a PUSH or POP operation.

The stack operates as a circular buffer if the STVREN bit is programmed to '0' (Configuration Words). This means that after the stack has been PUSHed sixteen times, the seventeenth PUSH overwrites the value that was stored from the first PUSH. The eighteenth PUSH overwrites the second PUSH (and so on). The STKOVF and STKUNF flag bits will be set on an Overflow/Underflow, regardless of whether the Reset is enabled.

| **Note:** | There are no instructions/mnemonics called PUSH or POP. These are actions that occur from the execution of the CALL, CALLW, RETURN, RETLW and RETFIE instructions or the vectoring to an interrupt address. |
|---|---|

### 3.5.1 ACCESSING THE STACK

The stack is available through the TOSH, TOSL and STKPTR registers. STKPTR is the current value of the Stack Pointer. TOSH:TOSL register pair points to the TOP of the stack. Both registers are read/writable. TOS is split into TOSH and TOSL due to the 15-bit size of the PC. To access the stack, adjust the value of STKPTR, which will position TOSH:TOSL, then read/write to TOSH:TOSL. STKPTR is five bits to allow detection of overflow and underflow.

| **Note:** | Care should be taken when modifying the STKPTR while interrupts are enabled. |
|---|---|

During normal program operation, CALL, CALLW and Interrupts will increment STKPTR while RETLW, RETURN, and RETFIE will decrement STKPTR. At any time, STKPTR can be inspected to see how much stack is left. The STKPTR always points at the currently used place on the stack. Therefore, a CALL or CALLW will increment the STKPTR and then write the PC, and a return will unload the PC and then decrement the STKPTR.

Reference Figure 3-4 through Figure 3-7 for examples of accessing the stack.

**FIGURE 3-4: ACCESSING THE STACK EXAMPLE 1**

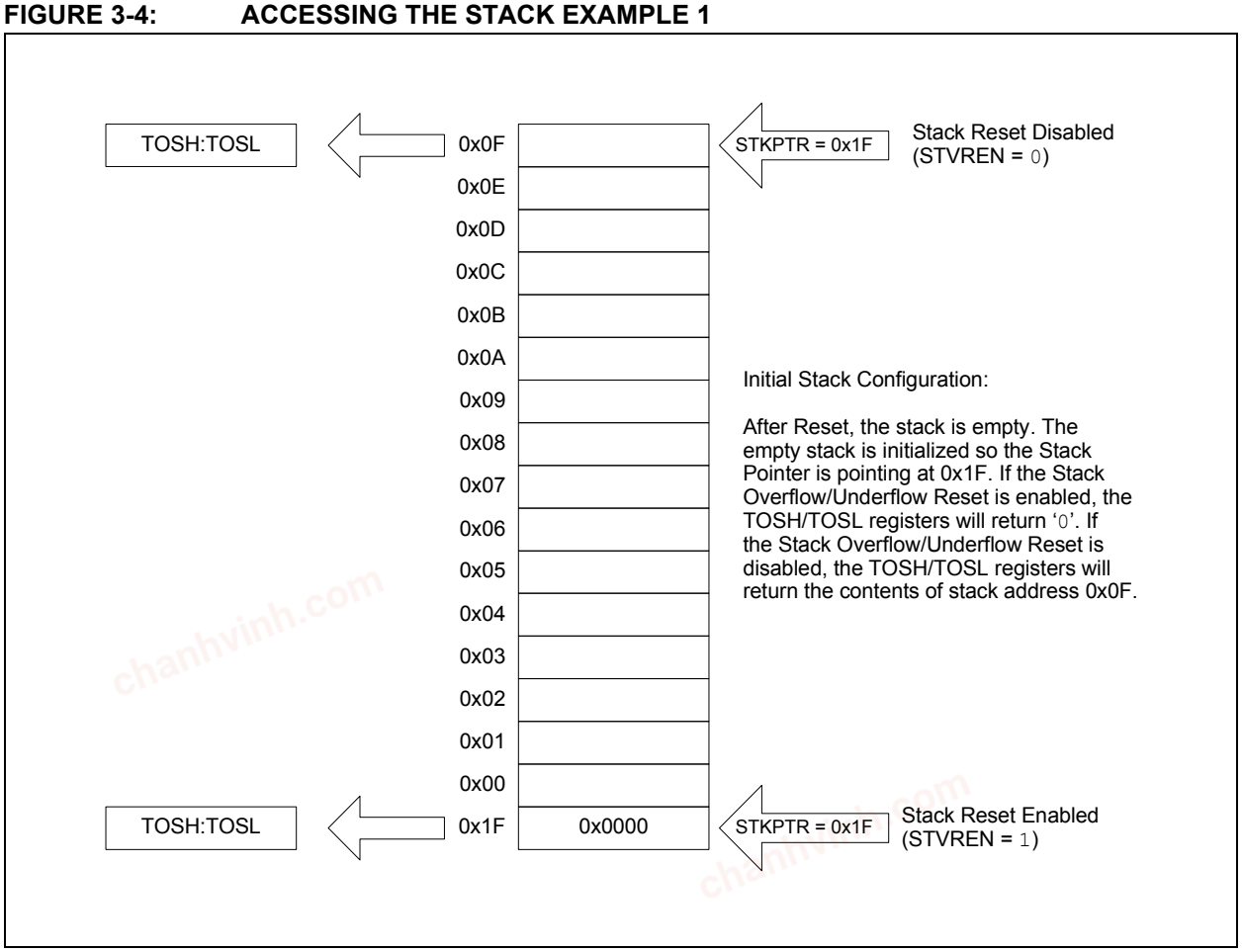


 © 2013 Microchip Technology Inc.

chanhvinh.com



**FIGURE 3-5: ACCESSING THE STACK EXAMPLE 2**

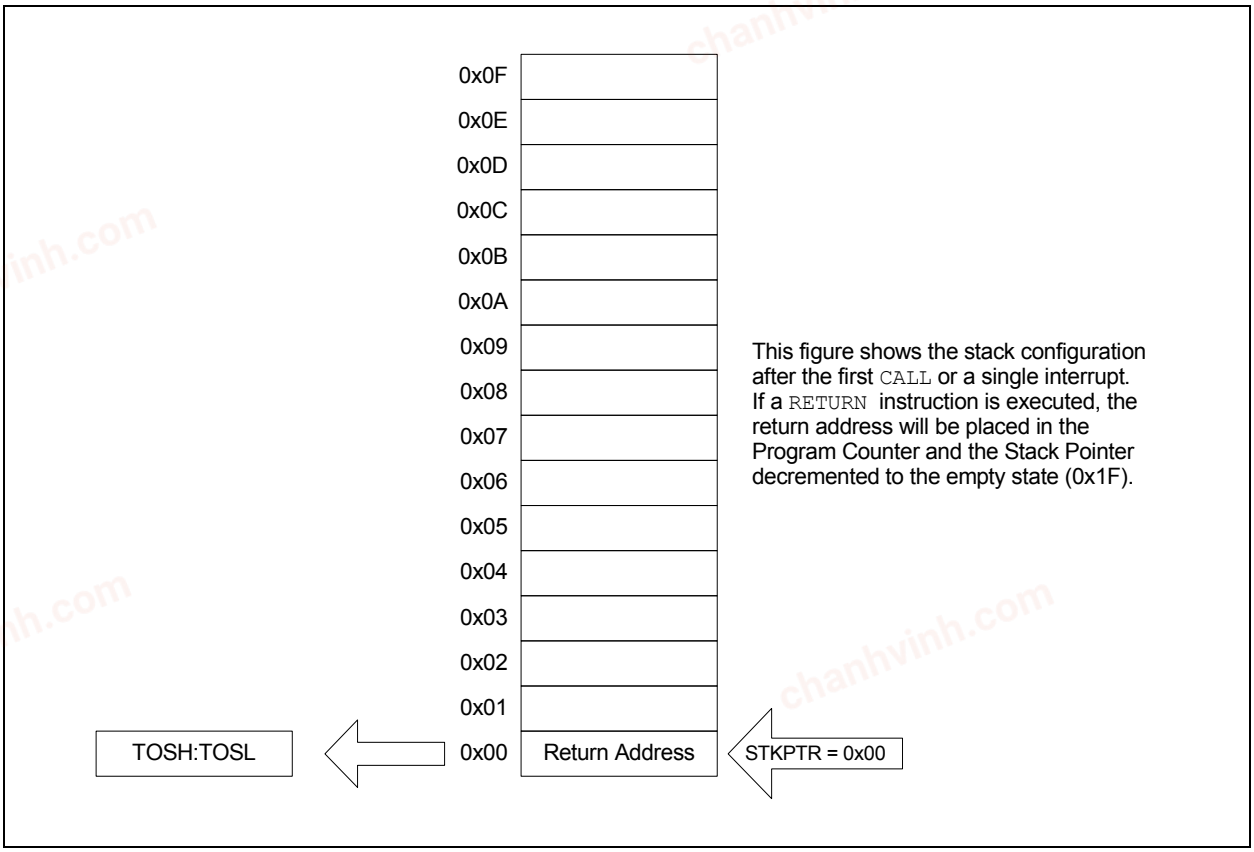


**FIGURE 3-6: ACCESSING THE STACK EXAMPLE 3**

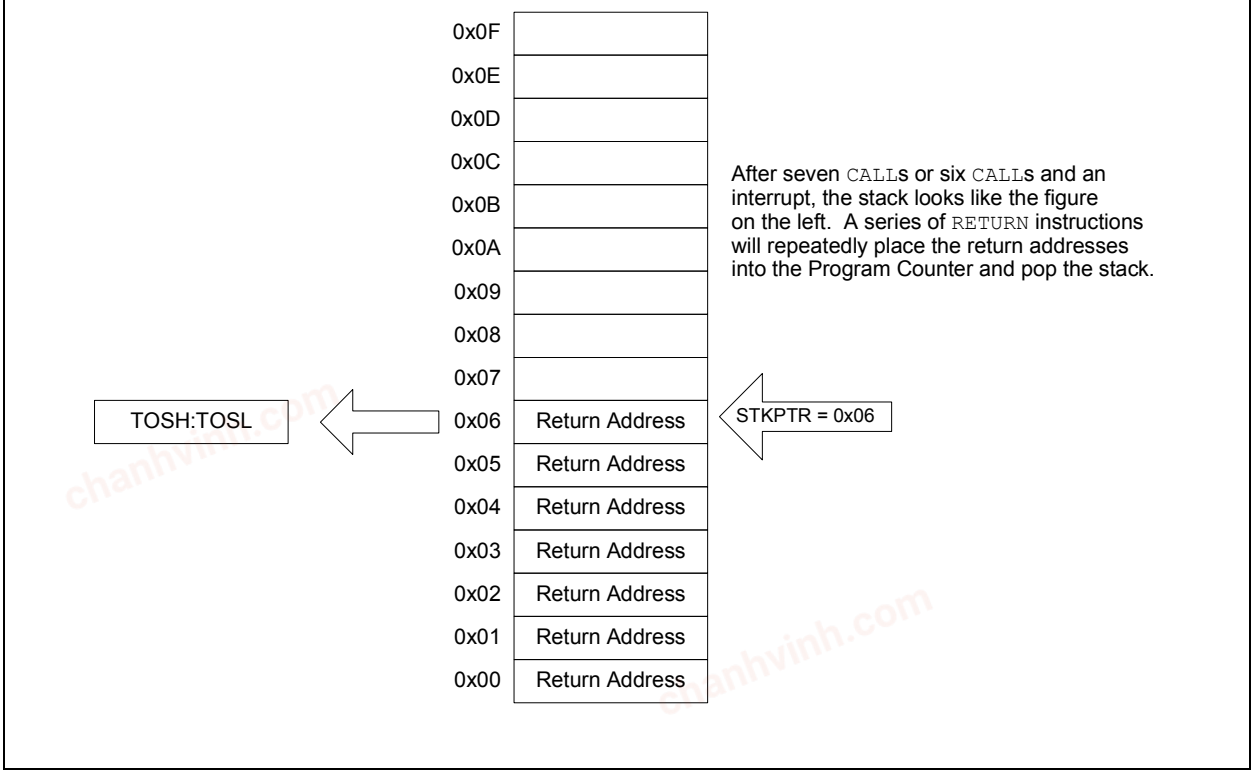

chanhvinh.com



**FIGURE 3-7: ACCESSING THE STACK EXAMPLE 4**

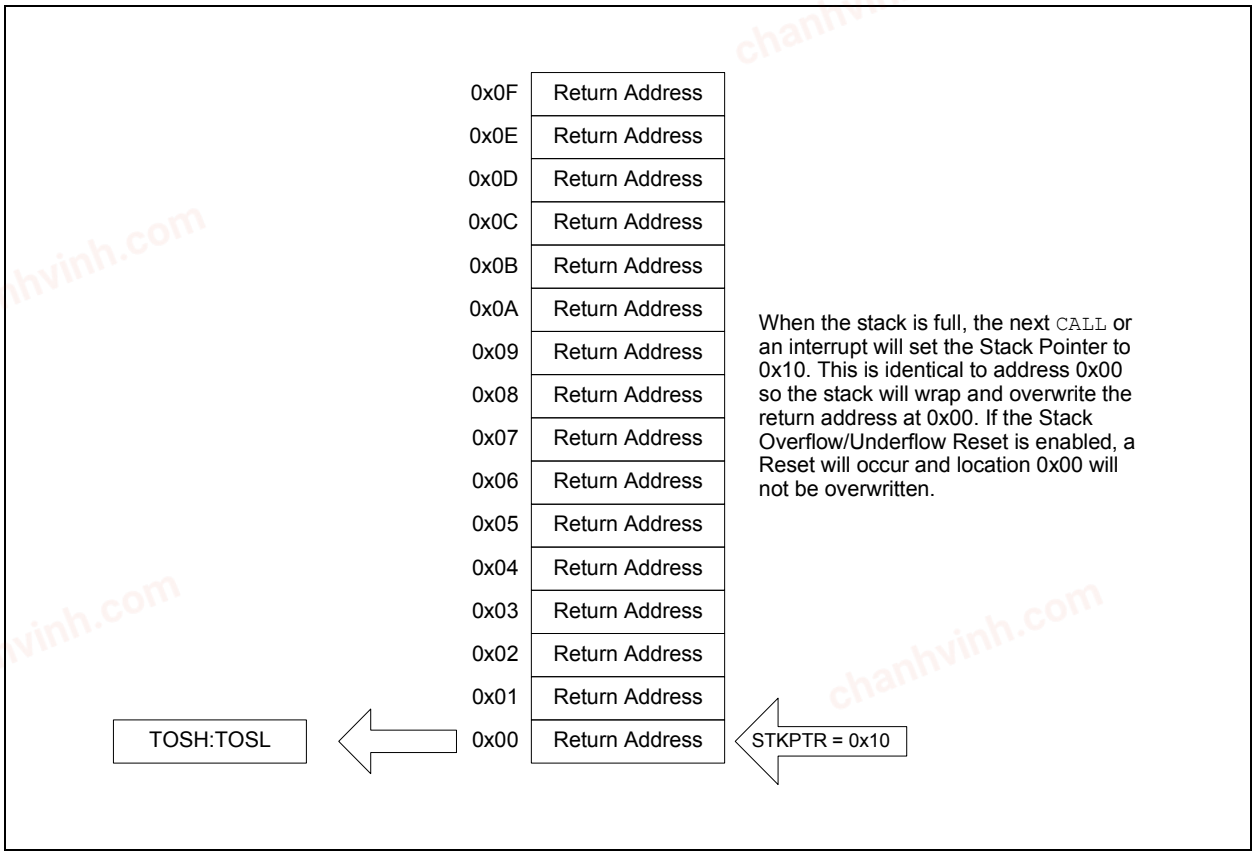


### 3.5.2 OVERFLOW/UNDERFLOW RESET

If the STVREN bit in Configuration Words is programmed to '1', the device will be reset if the stack is PUSHed beyond the sixteenth level or POPed beyond the first level, setting the appropriate bits (STKOVF or STKUNF, respectively) in the PCON register.

## 3.6 Indirect Addressing

The INDFn registers are not physical registers. Any instruction that accesses an INDFn register actually accesses the register at the address specified by the File Select Registers (FSR). If the FSRn address specifies one of the two INDFn registers, the read will return '0' and the write will not occur (though Status bits may be affected). The FSRn register value is created by the pair FSRnH and FSRnL.

The FSR registers form a 16-bit address that allows an addressing space with 65536 locations. These locations are divided into three memory regions:

- Traditional Data Memory
- Linear Data Memory
- Program Flash Memory

 © 2013 Microchip Technology Inc.

chanhvinh.com



**FIGURE 3-8: INDIRECT ADDRESSING**

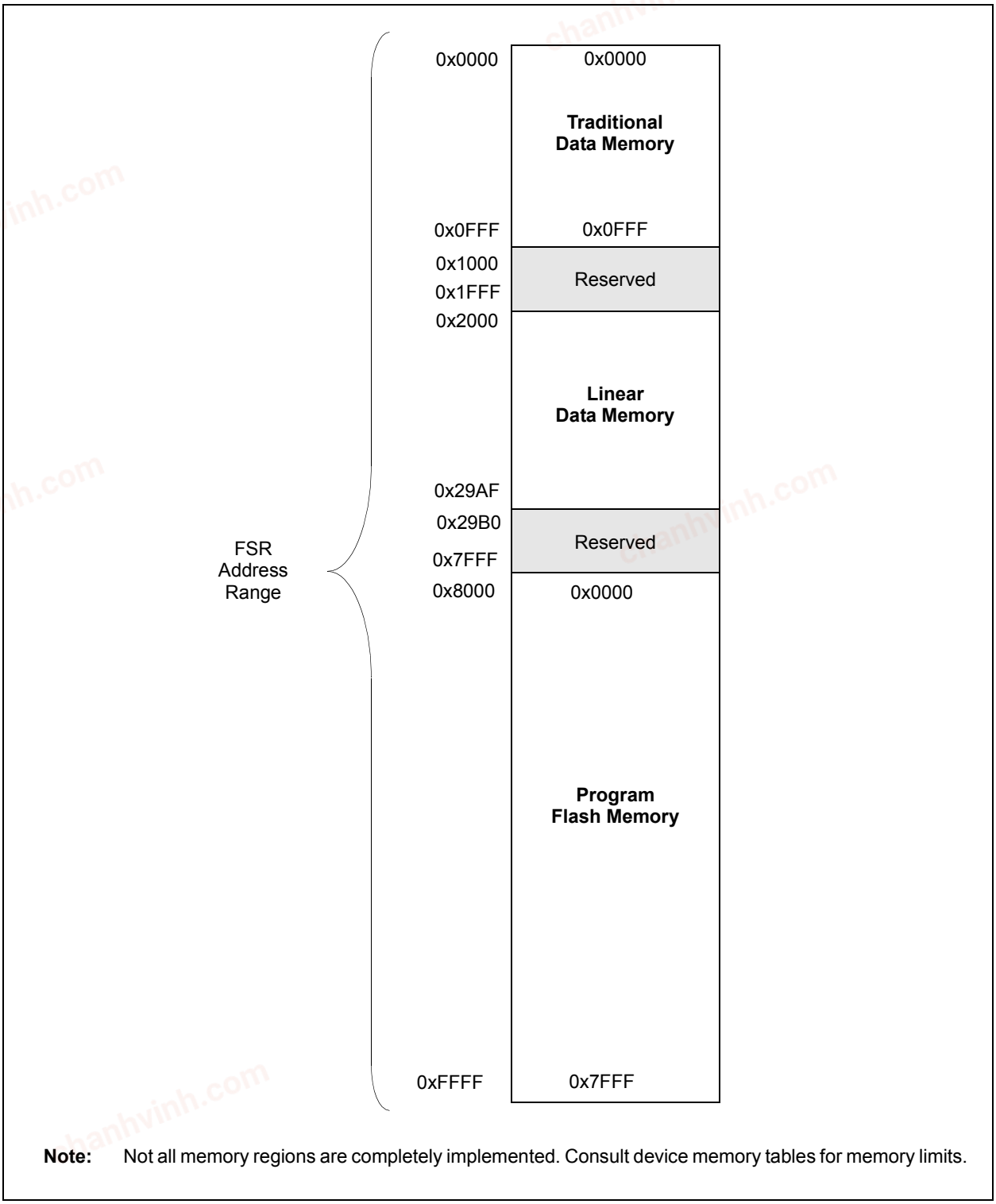


**Note:** Not all memory regions are completely implemented. Consult device memory tables for memory limits.

chanhvinh.com



### 3.6.1 TRADITIONAL DATA MEMORY

The traditional data memory is a region from FSR address 0x000 to FSR address 0xFFF. The addresses correspond to the absolute addresses of all SFR, GPR and common registers.

**FIGURE 3-9: TRADITIONAL DATA MEMORY MAP**

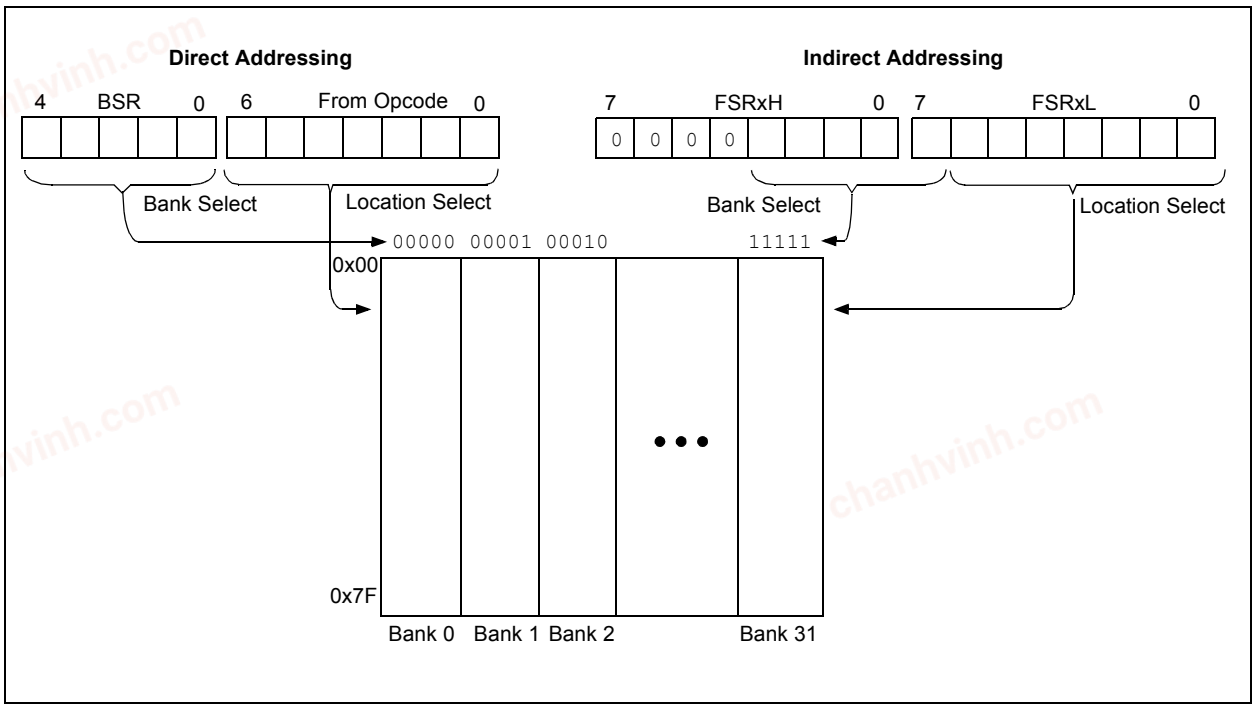


 © 2013 Microchip Technology Inc.

chanhvinh.com



### 3.6.2 LINEAR DATA MEMORY

The linear data memory is the region from FSR address 0x2000 to FSR address 0x29AF. This region is a virtual region that points back to the 80-byte blocks of GPR memory in all the banks.

Unimplemented memory reads as 0x00. Use of the linear data memory region allows buffers to be larger than 80 bytes because incrementing the FSR beyond one bank will go directly to the GPR memory of the next bank.

The 16 bytes of common memory are not included in the linear data memory region.

**FIGURE 3-10: LINEAR DATA MEMORY MAP**

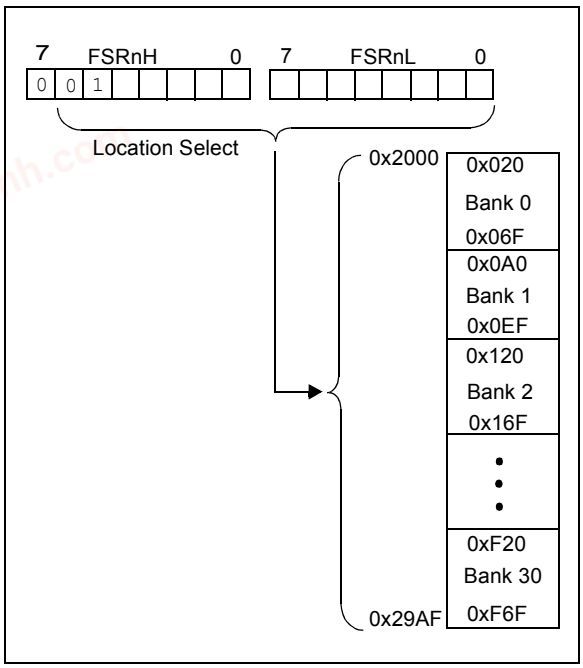


### 3.6.3 PROGRAM FLASH MEMORY

To make constant data access easier, the entire program Flash memory is mapped to the upper half of the FSR address space. When the MSB of FSRnH is set, the lower 15 bits are the address in program memory which will be accessed through INDF. Only the lower eight bits of each memory location is accessible via INDF. Writing to the program Flash memory cannot be accomplished via the FSR/INDF interface. All instructions that access program Flash memory via the FSR/INDF interface will require one additional instruction cycle to complete.

**FIGURE 3-11: PROGRAM FLASH MEMORY MAP**

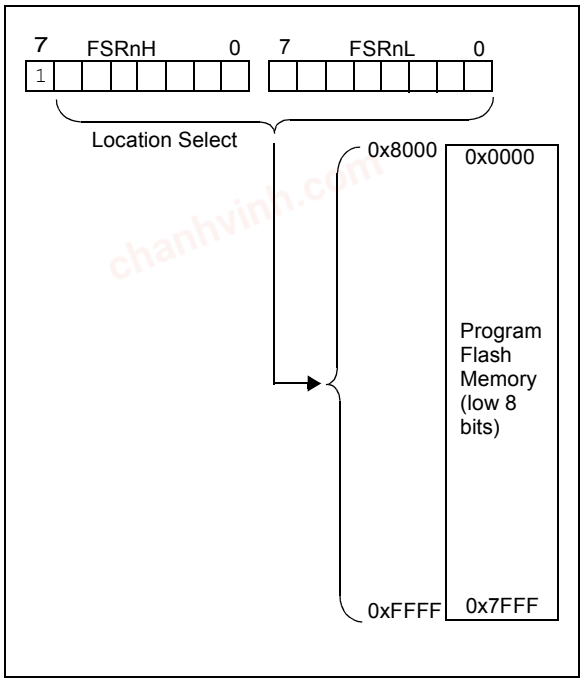

chanhvinh.com



**NOTES:**

chanhvinh.com

 © 2013 Microchip Technology Inc.

chanhvinh.com



## 4.0 DEVICE CONFIGURATION

Device configuration consists of Configuration Words, Code Protection and Device ID.

### 4.1 Configuration Words

There are several Configuration Word bits that allow different oscillator and memory protection options. These are implemented as Configuration Word 1 at 8007h and Configuration Word 2 at 8008h.

| | |
|---|---|
| **Note:** | The $\overline{\text{DEBUG}}$ bit in Configuration Words is managed automatically by device development tools including debuggers and programmers. For normal device operation, this bit should be maintained as a '1'. |

chanhvinh.com



## 4.2 Register Definitions: Configuration Words

**REGISTER 4-1: CONFIG1: CONFIGURATION WORD 1**

| R/P-1 | R/P-1 | R/P-1 | R/P-1 | R/P-1 | U-1 |
|---|---|---|---|---|---|
| FCMEN | IESO | $\overline{\text{CLKOUTEN}}$ | BOREN<1:0> | | — |
| bit 13 | | | | | bit 8 |

| R/P-1 | R/P-1 | R/P-1 | R/P-1 | R/P-1 | R/P-1 | R/P-1 | R/P-1 |
|---|---|---|---|---|---|---|---|
| $\overline{\text{CP}}$(1) | MCLRE | $\overline{\text{PWRTE}}$ | WDTE<1:0> | | FOSC<2:0> | | |
| bit 7 | | | | | | | bit 0 |

| **Legend:** | | |
|---|---|---|
| R = Readable bit | P = Programmable bit | U = Unimplemented bit, read as '1' |
| '0' = Bit is cleared | '1' = Bit is set | -n = Value when blank or after Bulk Erase |

bit 13 **FCMEN:** Fail-Safe Clock Monitor Enable bit
1 = Fail-Safe Clock Monitor and internal/external switchover are both enabled.
0 = Fail-Safe Clock Monitor is disabled

bit 12 **IESO:** Internal External Switchover bit
1 = Internal/External Switchover mode is enabled
0 = Internal/External Switchover mode is disabled

bit 11 **$\overline{\text{CLKOUTEN}}$:** Clock Out Enable bit
If FOSC configuration bits are set to LP, XT, HS modes:
This bit is ignored, CLKOUT function is disabled. Oscillator function on the CLKOUT pin.
All other FOSC modes:
1 = CLKOUT function is disabled. I/O function on the CLKOUT pin.
0 = CLKOUT function is enabled on the CLKOUT pin

bit 10-9 **BOREN<1:0>:** Brown-out Reset Enable bits
11 = BOR enabled
10 = BOR enabled during operation and disabled in Sleep
01 = BOR controlled by SBOREN bit of the BORCON register
00 = BOR disabled

bit 8 **Unimplemented:** Read as '1'

bit 7 **$\overline{\text{CP}}$:** Code Protection bit(1)
1 = Program memory code protection is disabled
0 = Program memory code protection is enabled

bit 6 **MCLRE:** $\overline{\text{MCLR}}$/VPP Pin Function Select bit
If LVP bit = 1:
This bit is ignored.
If LVP bit = 0:
1 = $\overline{\text{MCLR}}$/VPP pin function is $\overline{\text{MCLR}}$; Weak pull-up enabled.
0 = $\overline{\text{MCLR}}$/VPP pin function is digital input; $\overline{\text{MCLR}}$ internally disabled; Weak pull-up under control of WPUE3 bit.

bit 5 **$\overline{\text{PWRTE}}$:** Power-up Timer Enable bit
1 = PWRT disabled
0 = PWRT enabled

bit 4-3 **WDTE<1:0>:** Watchdog Timer Enable bit
11 = WDT enabled
10 = WDT enabled while running and disabled in Sleep
01 = WDT controlled by the SWDTEN bit in the WDTCON register
00 = WDT disabled

 © 2013 Microchip Technology Inc.

chanhvinh.com



**REGISTER 4-1: CONFIG1: CONFIGURATION WORD 1 (CONTINUED)**

bit 2-0 **FOSC<2:0>:** Oscillator Selection bits

111 = ECH: External Clock, High-Power mode (4-20 MHz): device clock supplied to CLKIN pin
110 = ECM: External Clock, Medium-Power mode (0.5-4 MHz): device clock supplied to CLKIN pin
101 = ECL: External Clock, Low-Power mode (0-0.5 MHz): device clock supplied to CLKIN pin
100 = INTOSC oscillator: I/O function on CLKIN pin
011 = EXTRC oscillator: External RC circuit connected to CLKIN pin
010 = HS oscillator: High-speed crystal/resonator connected between OSC1 and OSC2 pins
001 = XT oscillator: Crystal/resonator connected between OSC1 and OSC2 pins
000 = LP oscillator: Low-power crystal connected between OSC1 and OSC2 pins

**Note 1:** The entire Flash program memory will be erased when the code protection is turned off during an erase. When a Bulk Erase Program Memory Command is executed, the entire program Flash memory and configuration memory will be erased.

chanhvinh.com



**REGISTER 4-2: CONFIG2: CONFIGURATION WORD 2**

| R/P-1 | R/P-1 | R/P-1 | R/P-1 | R/P-1 | R/P-1 |
|---|---|---|---|---|---|
| LVP(1) | DEBUG(2) | LPBOR | BORV(3) | STVREN | PLLEN |
| bit 13 | | | | | bit 8 |

| R/P-1 | U-1 | U-1 | U-1 | U-1 | R/P-1 | R/P-1 | R/P-1 |
|---|---|---|---|---|---|---|---|
| ZCDDIS | — | — | — | — | PPS1WAY | WRT<1:0> | |
| bit 7 | | | | | | | bit 0 |

| **Legend:** | | |
|---|---|---|
| R = Readable bit | P = Programmable bit | U = Unimplemented bit, read as '1' |
| '0' = Bit is cleared | '1' = Bit is set | -n = Value when blank or after Bulk Erase |

bit 13 **LVP:** Low-Voltage Programming Enable bit(1)
1 = Low-voltage programming enabled
0 = High-voltage on MCLR must be used for programming

bit 12 **DEBUG:** In-Circuit Debugger Mode bit(2)
1 = In-Circuit Debugger disabled, ICSPCLK and ICSPDAT are general purpose I/O pins
0 = In-Circuit Debugger enabled, ICSPCLK and ICSPDAT are dedicated to the debugger

bit 11 **LPBOR:** Low-Power BOR Enable bit
1 = Low-Power Brown-out Reset is disabled
0 = Low-Power Brown-out Reset is enabled

bit 10 **BORV:** Brown-out Reset Voltage Selection bit(3)
1 = Brown-out Reset voltage (VBOR), low trip point selected.
0 = Brown-out Reset voltage (VBOR), high trip point selected.

bit 9 **STVREN:** Stack Overflow/Underflow Reset Enable bit
1 = Stack Overflow or Underflow will cause a Reset
0 = Stack Overflow or Underflow will not cause a Reset

bit 8 **PLLEN:** PLL Enable bit
1 = 4xPLL enabled
0 = 4xPLL disabled

bit 7 **ZCDDIS:** ZCD Disable bit
1 = ZCD disabled. ZCD can be enabled by setting the ZCDSEN bit of ZCDCON
0 = ZCD always enabled

bit 6-3 **Unimplemented:** Read as '1'

bit 2 **PPS1WAY**: PPSLOCK Bit One-Way Set Enable bit
1 = The PPSLOCK bit can only be set once after an unlocking sequence is executed; once PPSLOCK is set, all future changes to PPS registers are prevented
0 = The PPSLOCK bit can be set and cleared as needed (provided an unlocking sequence is executed)

bit 1-0 **WRT<1:0>:** Flash Memory Self-Write Protection bits
4 kW Flash memory
11 = Write protection off
10 = 000h to 1FFh write protected, 200h to FFFh may be modified by PMCON control
01 = 000h to 7FFh write protected, 800h to FFFh may be modified by PMCON control
00 = 000h to FFFh write protected, no addresses may be modified by PMCON control

**Note 1:** The LVP bit cannot be programmed to '0' when Programming mode is entered via LVP.
**2:** The DEBUG bit in Configuration Words is managed automatically by device development tools including debuggers and programmers. For normal device operation, this bit should be maintained as a '1'.
**3:** See VBOR parameter for specific trip point voltages.

 © 2013 Microchip Technology Inc.

chanhvinh.com



## 4.3 Code Protection

Code protection allows the device to be protected from unauthorized access. Program memory protection is controlled independently. Internal access to the program memory is unaffected by any code protection setting.

### 4.3.1 PROGRAM MEMORY PROTECTION

The entire program memory space is protected from external reads and writes by the $\overline{CP}$ bit in Configuration Words. When $\overline{CP}$ = 0, external reads and writes of program memory are inhibited and a read will return all '0's. The CPU can continue to read program memory, regardless of the protection bit settings. Writing the program memory is dependent upon the write protection setting. See **Section 4.4 "Write Protection"** for more information.

## 4.4 Write Protection

Write protection allows the device to be protected from unintended self-writes. Applications, such as boot loader software, can be protected while allowing other regions of the program memory to be modified.

The WRT<1:0> bits in Configuration Words define the size of the program memory block that is protected.

## 4.5 User ID

Four memory locations (8000h-8003h) are designated as ID locations where the user can store checksum or other code identification numbers. These locations are readable and writable during normal execution. See **Section 10.4 "User ID, Device ID and Configuration Word Access"** for more information on accessing these memory locations. For more information on checksum calculation, see the *"PIC16(L)F170X Memory Programming Specification"* (DS41683).

chanhvinh.com



## 4.6 Device ID and Revision ID

The 14-bit device ID word is located at 8006h and the 14-bit revision ID is located at 8005h. These locations are read-only and cannot be erased or modified. See **Section 10.4 "User ID, Device ID and Configuration Word Access"** for more information on accessing these memory locations.

Development tools, such as device programmers and debuggers, may be used to read the Device ID and Revision ID.

## 4.7 Register Definitions: Device and Revision

**REGISTER 4-3: DEVID: DEVICE ID REGISTER**

| R | R | R | R | R | R |
|---|---|---|---|---|---|
| DEV<13:8> | | | | | |
| bit 13 | | | | | bit 8 |

| R | R | R | R | R | R | R | R |
|---|---|---|---|---|---|---|---|
| DEV<7:0> | | | | | | | |
| bit 7 | | | | | | | bit 0 |

| **Legend:** | | |
|---|---|---|
| R = Readable bit | | |
| '1' = Bit is set | '0' = Bit is cleared | |

bit 13-0 **DEV<13:0>:** Device ID bits

| Device | DEVID<13:0> Values |
|---|---|
| PIC16F1704 | 11 0000 0100 0011 (3043h) |
| PIC16LF1704 | 11 0000 0100 0101 (3045h) |
| PIC16F1708 | 11 0000 0100 0010 (3042h) |
| PIC16LF1708 | 11 0000 0100 0100 (3044h) |

**REGISTER 4-4: REVID: REVISION ID REGISTER**

| R | R | R | R | R | R |
|---|---|---|---|---|---|
| REV<13:8> | | | | | |
| bit 13 | | | | | bit 8 |

| R | R | R | R | R | R | R | R |
|---|---|---|---|---|---|---|---|
| REV<7:0> | | | | | | | |
| bit 7 | | | | | | | bit 0 |

| **Legend:** | | |
|---|---|---|
| R = Readable bit | | |
| '1' = Bit is set | '0' = Bit is cleared | |

bit 13-0 **REV<13:0>:** Revision ID bits

 © 2013 Microchip Technology Inc.

chanhvinh.com



## 5.0 RESETS

There are multiple ways to reset this device:

- Power-On Reset (POR)
- Brown-Out Reset (BOR)
- Low-Power Brown-Out Reset (LPBOR)
- MCLR Reset
- WDT Reset
- RESET instruction
- Stack Overflow
- Stack Underflow
- Programming mode exit

To allow VDD to stabilize, an optional power-up timer can be enabled to extend the Reset time after a BOR or POR event.

A simplified block diagram of the On-Chip Reset Circuit is shown in Figure 5-1.

**FIGURE 5-1: SIMPLIFIED BLOCK DIAGRAM OF ON-CHIP RESET CIRCUIT**

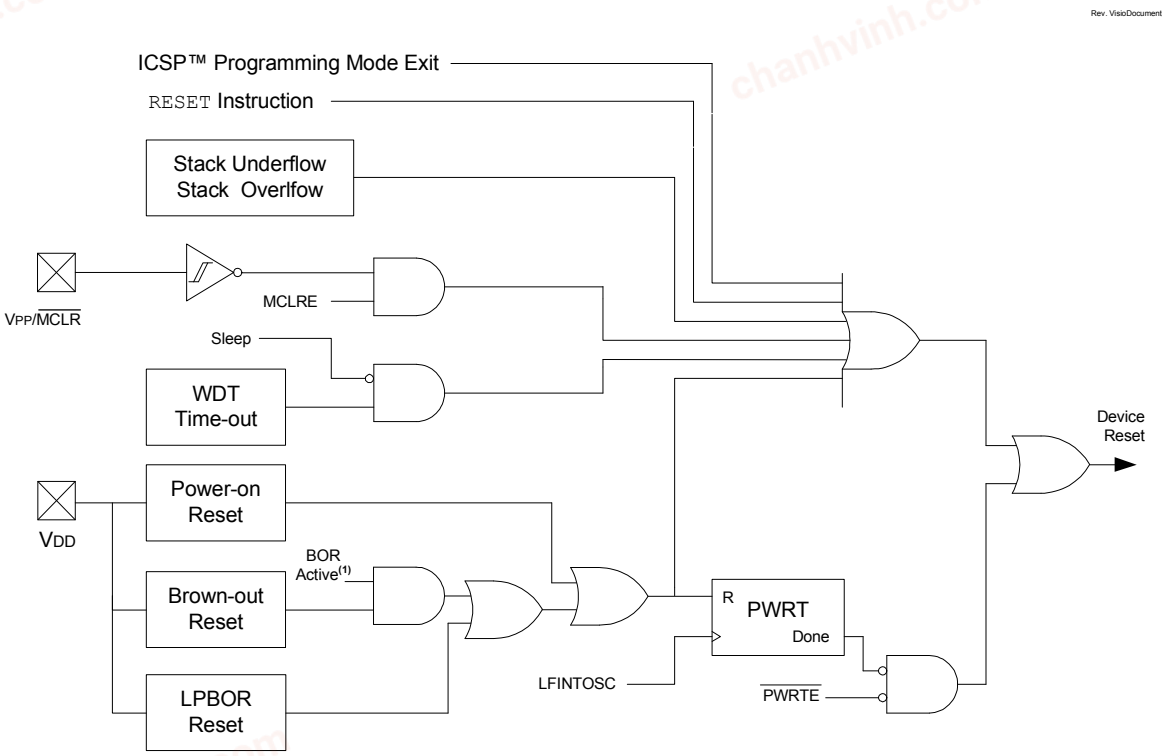


**Note 1:** See Table 5-1 for BOR active conditions.

chanhvinh.com



## 5.1 Power-On Reset (POR)

The POR circuit holds the device in Reset until VDD has reached an acceptable level for minimum operation. Slow rising VDD, fast operating speeds or analog performance may require greater than minimum VDD. The PWRT, BOR or MCLR features can be used to extend the start-up period until all device operation conditions have been met.

### 5.1.1 POWER-UP TIMER (PWRT)

The Power-up Timer provides a nominal 64 ms time-out on POR or Brown-out Reset.

The device is held in Reset as long as PWRT is active. The PWRT delay allows additional time for the VDD to rise to an acceptable level. The Power-up Timer is enabled by clearing the PWRTE bit in Configuration Words.

The Power-up Timer starts after the release of the POR and BOR.

For additional information, refer to Application Note AN607, *"Power-up Trouble Shooting"* (DS00607).

## 5.2 Brown-Out Reset (BOR)

The BOR circuit holds the device in Reset when VDD reaches a selectable minimum level. Between the POR and BOR, complete voltage range coverage for execution protection can be implemented.

The Brown-out Reset module has four operating modes controlled by the BOREN<1:0> bits in Configuration Words. The four operating modes are:

- BOR is always on
- BOR is off when in Sleep
- BOR is controlled by software
- BOR is always off

Refer to Table 5-1 for more information.

The Brown-out Reset voltage level is selectable by configuring the BORV bit in Configuration Words.

A VDD noise rejection filter prevents the BOR from triggering on small events. If VDD falls below VBOR for a duration greater than parameter TBORDC, the device will reset. See Figure 5-2 for more information.

**TABLE 5-1: BOR OPERATING MODES**

| BOREN<1:0> | SBOREN | Device Mode | BOR Mode | Instruction Execution upon: Release of POR or Wake-up from Sleep |
|---|---|---|---|---|
| 11 | X | X | Active | Waits for BOR ready(1) (BORRDY = 1) |
| 10 | X | Awake | Active | Waits for BOR ready (BORRDY = 1) |
| | | Sleep | Disabled | |
| 01 | 1 | X | Active | Waits for BOR ready(1) (BORRDY = 1) |
| | 0 | X | Disabled | Begins immediately (BORRDY = x) |
| 00 | X | X | Disabled | |

**Note 1:** In these specific cases, "Release of POR" and "Wake-up from Sleep", there is no delay in start-up. The BOR ready flag, (BORRDY = 1), will be set before the CPU is ready to execute instructions because the BOR circuit is forced on by the BOREN<1:0> bits.

### 5.2.1 BOR IS ALWAYS ON

When the BOREN bits of Configuration Words are programmed to '11', the BOR is always on. The device start-up will be delayed until the BOR is ready and VDD is higher than the BOR threshold.

BOR protection is active during Sleep. The BOR does not delay wake-up from Sleep.

### 5.2.2 BOR IS OFF IN SLEEP

When the BOREN bits of Configuration Words are programmed to '10', the BOR is on, except in Sleep. The device start-up will be delayed until the BOR is ready and VDD is higher than the BOR threshold.

BOR protection is not active during Sleep. The device wake-up will be delayed until the BOR is ready.

### 5.2.3 BOR CONTROLLED BY SOFTWARE

When the BOREN bits of Configuration Words are programmed to '01', the BOR is controlled by the SBOREN bit of the BORCON register. The device start-up is not delayed by the BOR ready condition or the VDD level.

BOR protection begins as soon as the BOR circuit is ready. The status of the BOR circuit is reflected in the BORRDY bit of the BORCON register.

BOR protection is unchanged by Sleep.

 © 2013 Microchip Technology Inc.

chanhvinh.com



**FIGURE 5-2: BROWN-OUT SITUATIONS**

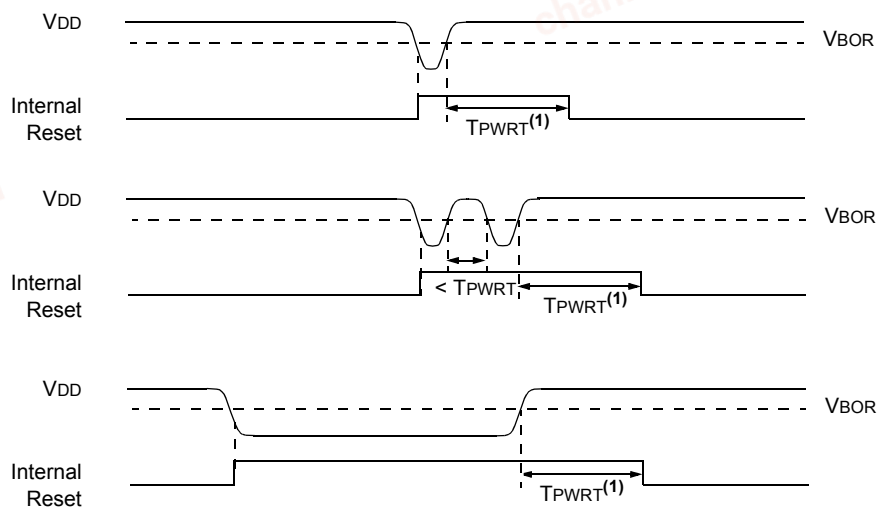


**Note 1:** TPWRT delay only if $\overline{\text{PWRTE}}$ bit is programmed to '0'.

## 5.3 Register Definitions: BOR Control

**REGISTER 5-1: BORCON: BROWN-OUT RESET CONTROL REGISTER**

| R/W-1/u | R/W-0/u | U-0 | U-0 | U-0 | U-0 | U-0 | R-q/u |
|---|---|---|---|---|---|---|---|
| SBOREN | BORFS(1) | — | — | — | — | — | BORRDY |
| bit 7 | | | | | | | bit 0 |

| Legend: | | |
|---|---|---|
| R = Readable bit | W = Writable bit | U = Unimplemented bit, read as '0' |
| u = Bit is unchanged | x = Bit is unknown | -n/n = Value at POR and BOR/Value at all other Resets |
| '1' = Bit is set | '0' = Bit is cleared | q = Value depends on condition |

bit 7 **SBOREN:** Software Brown-out Reset Enable bit
If BOREN <1:0> in Configuration Words ≠ 01:
SBOREN is read/write, but has no effect on the BOR.
If BOREN <1:0> in Configuration Words = 01:
1 = BOR Enabled
0 = BOR Disabled

bit 6 **BORFS:** Brown-out Reset Fast Start bit(1)
If BOREN<1:0> = 11 (Always on) or BOREN<1:0> = 00 (Always off)
BORFS is Read/Write, but has no effect.
If BOREN <1:0> = 10 (Disabled in Sleep) or BOREN<1:0> = 01 (Under software control):
1 = Band gap is forced on always (covers sleep/wake-up/operating cases)
0 = Band gap operates normally, and may turn off

bit 5-1 **Unimplemented:** Read as '0'

bit 0 **BORRDY:** Brown-out Reset Circuit Ready Status bit
1 = The Brown-out Reset circuit is active
0 = The Brown-out Reset circuit is inactive

**Note 1:** BOREN<1:0> bits are located in Configuration Words.

chanhvinh.com



## 5.4 Low-Power Brown-Out Reset (LPBOR)

The Low-Power Brown-Out Reset (LPBOR) is an essential part of the Reset subsystem. Refer to Figure 5-1 to see how the BOR interacts with other modules.

The LPBOR is used to monitor the external VDD pin. When too low of a voltage is detected, the device is held in Reset. When this occurs, a register bit ($\overline{BOR}$) is changed to indicate that a BOR Reset has occurred. The same bit is set for both the BOR and the LPBOR. Refer to Register 5-2.

### 5.4.1 ENABLING LPBOR

The LPBOR is controlled by the $\overline{LPBOR}$ bit of Configuration Words. When the device is erased, the LPBOR module defaults to disabled.

#### 5.4.1.1 LPBOR Module Output

The output of the LPBOR module is a signal indicating whether or not a Reset is to be asserted. This signal is OR'd together with the Reset signal of the BOR module to provide the generic $\overline{BOR}$ signal, which goes to the PCON register and to the power control block.

## 5.5 $\overline{MCLR}$

The $\overline{MCLR}$ is an optional external input that can reset the device. The $\overline{MCLR}$ function is controlled by the MCLRE bit of Configuration Words and the LVP bit of Configuration Words (Table 5-2).

**TABLE 5-2: $\overline{MCLR}$ CONFIGURATION**

| MCLRE | LVP | $\overline{MCLR}$ |
|---|---|---|
| 0 | 0 | Disabled |
| 1 | 0 | Enabled |
| x | 1 | Enabled |

### 5.5.1 $\overline{MCLR}$ ENABLED

When $\overline{MCLR}$ is enabled and the pin is held low, the device is held in Reset. The $\overline{MCLR}$ pin is connected to VDD through an internal weak pull-up.

The device has a noise filter in the $\overline{MCLR}$ Reset path. The filter will detect and ignore small pulses.

| **Note:** | A Reset does not drive the $\overline{MCLR}$ pin low. |
|---|---|

### 5.5.2 $\overline{MCLR}$ DISABLED

When $\overline{MCLR}$ is disabled, the pin functions as a general purpose input and the internal weak pull-up is under software control. See **Section 11.1 "PORTA Registers"** for more information.

## 5.6 Watchdog Timer (WDT) Reset

The Watchdog Timer generates a Reset if the firmware does not issue a CLRWDT instruction within the time-out period. The $\overline{TO}$ and $\overline{PD}$ bits in the STATUS register are changed to indicate the WDT Reset. See **Section 9.0 "Watchdog Timer (WDT)"** for more information.

## 5.7 RESET Instruction

A RESET instruction will cause a device Reset. The $\overline{RI}$ bit in the PCON register will be set to '0'. See Table 5-4 for default conditions after a RESET instruction has occurred.

## 5.8 Stack Overflow/Underflow Reset

The device can reset when the Stack Overflows or Underflows. The STKOVF or STKUNF bits of the PCON register indicate the Reset condition. These Resets are enabled by setting the STVREN bit in Configuration Words. See **3.5.2 "Overflow/Underflow Reset"** for more information.

## 5.9 Programming Mode Exit

Upon exit of Programming mode, the device will behave as if a POR had just occurred.

## 5.10 Power-Up Timer

The Power-up Timer optionally delays device execution after a BOR or POR event. This timer is typically used to allow VDD to stabilize before allowing the device to start running.

The Power-up Timer is controlled by the $\overline{PWRTE}$ bit of Configuration Words.

## 5.11 Start-up Sequence

Upon the release of a POR or BOR, the following must occur before the device will begin executing:

1. Power-up Timer runs to completion (if enabled).
2. Oscillator start-up timer runs to completion (if required for oscillator source).
3. $\overline{MCLR}$ must be released (if enabled).

The total time-out will vary based on oscillator configuration and Power-up Timer configuration. See **Section 6.0 "Oscillator Module (with Fail-Safe Clock Monitor)"** for more information.

The Power-up Timer and oscillator start-up timer run independently of $\overline{MCLR}$ Reset. If $\overline{MCLR}$ is kept low long enough, the Power-up Timer and oscillator start-up timer will expire. Upon bringing $\overline{MCLR}$ high, the device will begin execution after 10 FOSC cycles (see Figure 5-3). This is useful for testing purposes or to synchronize more than one device operating in parallel.

 © 2013 Microchip Technology Inc.

chanhvinh.com



**FIGURE 5-3: RESET START-UP SEQUENCE**

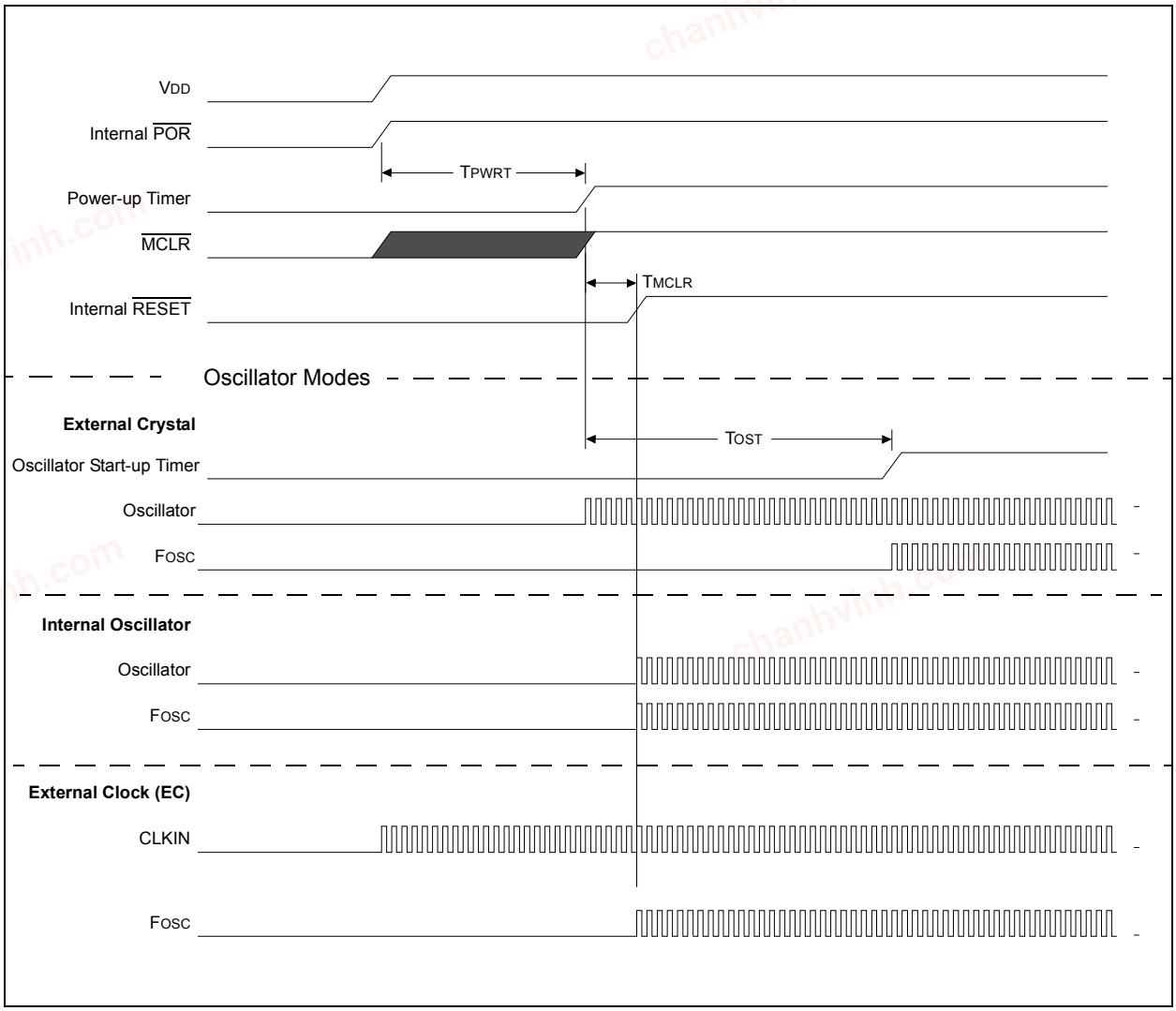

chanhvinh.com



## 5.12 Determining the Cause of a Reset

Upon any Reset, multiple bits in the STATUS and PCON register are updated to indicate the cause of the Reset. Table 5-3 and Table 5-4 show the Reset conditions of these registers.

**TABLE 5-3: RESET STATUS BITS AND THEIR SIGNIFICANCE**

| STKOVF | STKUNF | $\overline{\text{RWDT}}$ | $\overline{\text{RMCLR}}$ | $\overline{\text{RI}}$ | $\overline{\text{POR}}$ | $\overline{\text{BOR}}$ | $\overline{\text{TO}}$ | $\overline{\text{PD}}$ | Condition |
|---|---|---|---|---|---|---|---|---|---|
| 0 | 0 | 1 | 1 | 1 | 0 | x | 1 | 1 | Power-on Reset |
| 0 | 0 | 1 | 1 | 1 | 0 | x | 0 | x | Illegal, $\overline{\text{TO}}$ is set on $\overline{\text{POR}}$ |
| 0 | 0 | 1 | 1 | 1 | 0 | x | x | 0 | Illegal, $\overline{\text{PD}}$ is set on $\overline{\text{POR}}$ |
| 0 | 0 | u | 1 | 1 | u | 0 | 1 | 1 | Brown-out Reset |
| u | u | 0 | u | u | u | u | 0 | u | WDT Reset |
| u | u | u | u | u | u | u | 0 | 0 | WDT Wake-up from Sleep |
| u | u | u | u | u | u | u | 1 | 0 | Interrupt Wake-up from Sleep |
| u | u | u | 0 | u | u | u | u | u | $\overline{\text{MCLR}}$ Reset during normal operation |
| u | u | u | 0 | u | u | u | 1 | 0 | $\overline{\text{MCLR}}$ Reset during Sleep |
| u | u | u | u | 0 | u | u | u | u | RESET Instruction Executed |
| 1 | u | u | u | u | u | u | u | u | Stack Overflow Reset (STVREN = 1) |
| u | 1 | u | u | u | u | u | u | u | Stack Underflow Reset (STVREN = 1) |

**TABLE 5-4: RESET CONDITION FOR SPECIAL REGISTERS**

| Condition | Program Counter | STATUS Register | PCON Register |
|---|---|---|---|
| Power-on Reset | 0000h | ---1 1000 | 00-- 110x |
| $\overline{\text{MCLR}}$ Reset during normal operation | 0000h | ---u uuuu | uu-- 0uuu |
| $\overline{\text{MCLR}}$ Reset during Sleep | 0000h | ---1 0uuu | uu-- 0uuu |
| WDT Reset | 0000h | ---0 uuuu | uu-- uuuu |
| WDT Wake-up from Sleep | PC + 1 | ---0 0uuu | uu-- uuuu |
| Brown-out Reset | 0000h | ---1 1uuu | 00-- 11u0 |
| Interrupt Wake-up from Sleep | PC + 1(1) | ---1 0uuu | uu-- uuuu |
| RESET Instruction Executed | 0000h | ---u uuuu | uu-- u0uu |
| Stack Overflow Reset (STVREN = 1) | 0000h | ---u uuuu | 1u-- uuuu |
| Stack Underflow Reset (STVREN = 1) | 0000h | ---u uuuu | u1-- uuuu |

**Legend:** u = unchanged, x = unknown, - = unimplemented bit, reads as '0'.

**Note 1:** When the wake-up is due to an interrupt and Global Enable bit (GIE) is set, the return address is pushed on the stack and PC is loaded with the interrupt vector (0004h) after execution of PC + 1.

 © 2013 Microchip Technology Inc.

chanhvinh.com



## 5.13 Power Control (PCON) Register

The Power Control (PCON) register contains flag bits to differentiate between a:

- Power-on Reset ($\overline{POR}$)
- Brown-out Reset ($\overline{BOR}$)
- Reset Instruction Reset ($\overline{RI}$)
- $\overline{MCLR}$ Reset ($\overline{RMCLR}$)
- Watchdog Timer Reset ($\overline{RWDT}$)
- Stack Underflow Reset (STKUNF)
- Stack Overflow Reset (STKOVF)

The PCON register bits are shown in Register 5-2.

## 5.14 Register Definitions: Power Control

**REGISTER 5-2: PCON: POWER CONTROL REGISTER**

| R/W/HS-0/q | R/W/HS-0/q | U-0 | R/W/HC-1/q | R/W/HC-1/q | R/W/HC-1/q | R/W/HC-q/u | R/W/HC-q/u |
|---|---|---|---|---|---|---|---|
| STKOVF | STKUNF | — | $\overline{RWDT}$ | $\overline{RMCLR}$ | $\overline{RI}$ | $\overline{POR}$ | $\overline{BOR}$ |
| bit 7 | | | | | | | bit 0 |

| **Legend:** | | |
|---|---|---|
| HC = Bit is cleared by hardware | | HS = Bit is set by hardware |
| R = Readable bit | W = Writable bit | U = Unimplemented bit, read as '0' |
| u = Bit is unchanged | x = Bit is unknown | -m/n = Value at POR and BOR/Value at all other Resets |
| '1' = Bit is set | '0' = Bit is cleared | q = Value depends on condition |

bit 7 **STKOVF:** Stack Overflow Flag bit
1 = A Stack Overflow occurred
0 = A Stack Overflow has not occurred or cleared by firmware

bit 6 **STKUNF:** Stack Underflow Flag bit
1 = A Stack Underflow occurred
0 = A Stack Underflow has not occurred or cleared by firmware

bit 5 **Unimplemented:** Read as '0'

bit 4 **$\overline{RWDT}$:** Watchdog Timer Reset Flag bit
1 = A Watchdog Timer Reset has not occurred or set to '1' by firmware
0 = A Watchdog Timer Reset has occurred (cleared by hardware)

bit 3 **$\overline{RMCLR}$:** $\overline{MCLR}$ Reset Flag bit
1 = A $\overline{MCLR}$ Reset has not occurred or set to '1' by firmware
0 = A $\overline{MCLR}$ Reset has occurred (cleared by hardware)

bit 2 **$\overline{RI}$:** RESET Instruction Flag bit
1 = A RESET instruction has not been executed or set to '1' by firmware
0 = A RESET instruction has been executed (cleared by hardware)

bit 1 **$\overline{POR}$:** Power-on Reset Status bit
1 = No Power-on Reset occurred
0 = A Power-on Reset occurred (must be set in software after a Power-on Reset occurs)

bit 0 **$\overline{BOR}$:** Brown-out Reset Status bit
1 = No Brown-out Reset occurred
0 = A Brown-out Reset occurred (must be set in software after a Power-on Reset or Brown-out Reset occurs)

chanhvinh.com



**TABLE 5-5: SUMMARY OF REGISTERS ASSOCIATED WITH RESETS**

| Name | Bit 7 | Bit 6 | Bit 5 | Bit 4 | Bit 3 | Bit 2 | Bit 1 | Bit 0 | Register on Page |
|---|---|---|---|---|---|---|---|---|---|
| BORCON | SBOREN | BORFS | — | — | — | — | — | BORRDY | 57 |
| PCON | STKOVF | STKUNF | — | $\overline{\text{RWDT}}$ | $\overline{\text{RMCLR}}$ | $\overline{\text{RI}}$ | $\overline{\text{POR}}$ | $\overline{\text{BOR}}$ | 61 |
| STATUS | — | — | — | $\overline{\text{TO}}$ | $\overline{\text{PD}}$ | Z | DC | C | 23 |
| WDTCON | — | — | WDTPS<4:0> | | | | | SWDTEN | 102 |

**Legend:** — = unimplemented location, read as '0'. Shaded cells are not used by Resets.

 © 2013 Microchip Technology Inc.

chanhvinh.com



# 6.0 OSCILLATOR MODULE (WITH FAIL-SAFE CLOCK MONITOR)

## 6.1 Overview

The oscillator module has a wide variety of clock sources and selection features that allow it to be used in a wide range of applications while maximizing performance and minimizing power consumption. Figure 6-1 illustrates a block diagram of the oscillator module.

Clock sources can be supplied from external oscillators, quartz crystal resonators, ceramic resonators and Resistor-Capacitor (RC) circuits. In addition, the system clock source can be supplied from one of two internal oscillators and PLL circuits, with a choice of speeds selectable via software. Additional clock features include:

- Selectable system clock source between external or internal sources via software.
- Two-Speed Start-up mode, which minimizes latency between external oscillator start-up and code execution.
- Fail-Safe Clock Monitor (FSCM) designed to detect a failure of the external clock source (LP, XT, HS, ECH, ECM, ECL or EXTRC modes) and switch automatically to the internal oscillator.
- Oscillator Start-up Timer (OST) ensures stability of crystal oscillator sources.

The oscillator module can be configured in one of the following clock modes.

1. ECL – External Clock Low-Power mode (0 MHz to 0.5 MHz)
2. ECM – External Clock Medium-Power mode (0.5 MHz to 4 MHz)
3. ECH – External Clock High-Power mode (4 MHz to 32 MHz)
4. LP – 32 kHz Low-Power Crystal mode.
5. XT – Medium Gain Crystal or Ceramic Resonator Oscillator mode (up to 4 MHz)
6. HS – High Gain Crystal or Ceramic Resonator mode (4 MHz to 20 MHz)
7. EXTRC – External Resistor-Capacitor
8. INTOSC – Internal oscillator (31 kHz to 32 MHz)

Clock Source modes are selected by the FOSC<2:0> bits in the Configuration Words. The FOSC bits determine the type of oscillator that will be used when the device is first powered.

The ECH, ECM, and ECL clock modes rely on an external logic level signal as the device clock source. The LP, XT, and HS clock modes require an external crystal or resonator to be connected to the device. Each mode is optimized for a different frequency range. The EXTRC clock mode requires an external resistor and capacitor to set the oscillator frequency.

The INTOSC internal oscillator block produces low, medium, and high-frequency clock sources, designated LFINTOSC, MFINTOSC and HFINTOSC. (see Internal Oscillator Block, Figure 6-1). A wide selection of device clock frequencies may be derived from these three clock sources.

chanhvinh.com



**FIGURE 6-1: SIMPLIFIED PIC® MCU CLOCK SOURCE BLOCK DIAGRAM**

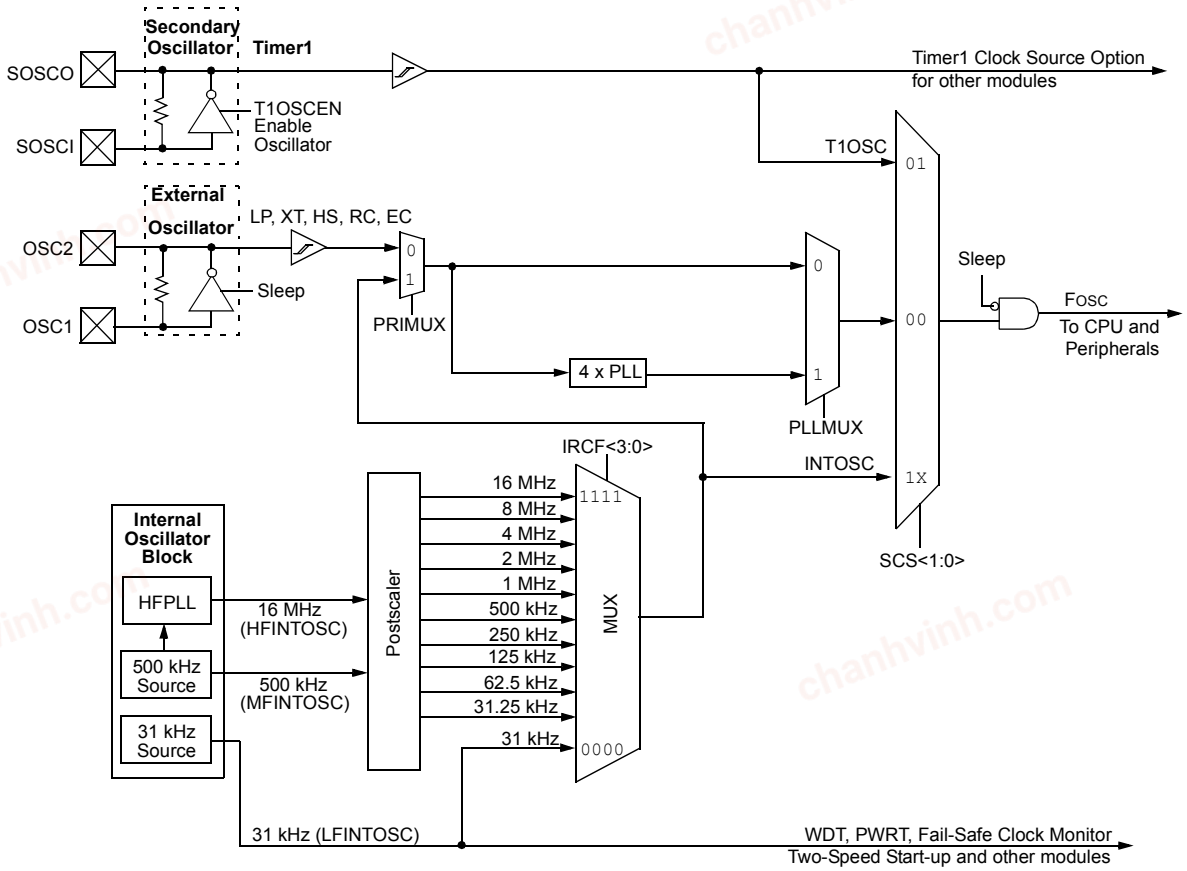


| Inputs | | | | Outputs | |
|---|---|---|---|---|---|
| SCS | FOSC<2:0> | PLLEN or SPLLEN | IRCF | PRIMUX | PLLMUX |
| =00 | =100 | 0 | x | 1 | 0 |
| | | 1 | =1110 | 1 | 1 |
| | | | ≠1110 | 1 | 0 |
| | ≠100 | 0 | x | 0 | 0 |
| | | 1 | x | 0 | 1 |
| ≠00 | X | X | X | X | X |

 © 2013 Microchip Technology Inc.

chanhvinh.com



## 6.2 Clock Source Types

Clock sources can be classified as external or internal.

External clock sources rely on external circuitry for the clock source to function. Examples are: oscillator modules (ECH, ECM, ECL mode), quartz crystal resonators or ceramic resonators (LP, XT and HS modes) and Resistor-Capacitor (EXTRC) mode circuits.

Internal clock sources are contained within the oscillator module. The internal oscillator block has two internal oscillators and a dedicated Phase-Lock Loop (HFPLL) that are used to generate three internal system clock sources: the 16 MHz High-Frequency Internal Oscillator (HFINTOSC), 500 kHz (MFINTOSC) and the 31 kHz Low-Frequency Internal Oscillator (LFINTOSC).

The system clock can be selected between external or internal clock sources via the System Clock Select (SCS) bits in the OSCCON register. See **Section 6.3 "Clock Switching"** for additional information.

### 6.2.1 EXTERNAL CLOCK SOURCES

An external clock source can be used as the device system clock by performing one of the following actions:

- Program the FOSC<2:0> bits in the Configuration Words to select an external clock source that will be used as the default system clock upon a device Reset.
- Write the SCS<1:0> bits in the OSCCON register to switch the system clock source to:
  - Secondary oscillator during run-time, or
  - An external clock source determined by the value of the FOSC bits.

See **Section 6.3 "Clock Switching"**for more information.

#### 6.2.1.1 EC Mode

The External Clock (EC) mode allows an externally generated logic level signal to be the system clock source. When operating in this mode, an external clock source is connected to the OSC1 input. OSC2/CLKOUT is available for general purpose I/O or CLKOUT. Figure 6-2 shows the pin connections for EC mode.

EC mode has three power modes to select from through Configuration Words:

- ECH – High-power, 4-32 MHz
- ECM – Medium-power, 0.5-4 MHz
- ECL – Low-power, 0-0.5 MHz

The Oscillator Start-up Timer (OST) is disabled when EC mode is selected. Therefore, there is no delay in operation after a Power-on Reset (POR) or wake-up from Sleep. Because the PIC® MCU design is fully static, stopping the external clock input will have the effect of halting the device while leaving all data intact. Upon restarting the external clock, the device will resume operation as if no time had elapsed.

**FIGURE 6-2: EXTERNAL CLOCK (EC) MODE OPERATION**

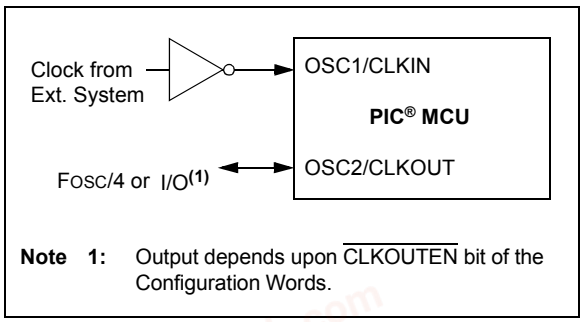


**Note 1:** Output depends upon $\overline{\text{CLKOUTEN}}$ bit of the Configuration Words.

#### 6.2.1.2 LP, XT, HS Modes

The LP, XT and HS modes support the use of quartz crystal resonators or ceramic resonators connected to OSC1 and OSC2 (Figure 6-3). The three modes select a low, medium or high gain setting of the internal inverter-amplifier to support various resonator types and speed.

**LP** Oscillator mode selects the lowest gain setting of the internal inverter-amplifier. LP mode current consumption is the least of the three modes. This mode is designed to drive only 32.768 kHz tuning-fork type crystals (watch crystals).

**XT** Oscillator mode selects the intermediate gain setting of the internal inverter-amplifier. XT mode current consumption is the medium of the three modes. This mode is best suited to drive resonators with a medium drive level specification.

**HS** Oscillator mode selects the highest gain setting of the internal inverter-amplifier. HS mode current consumption is the highest of the three modes. This mode is best suited for resonators that require a high drive setting.

Figure 6-3 and Figure 6-4 show typical circuits for quartz crystal and ceramic resonators, respectively.

chanhvinh.com



**FIGURE 6-3: QUARTZ CRYSTAL OPERATION (LP, XT OR HS MODE)**

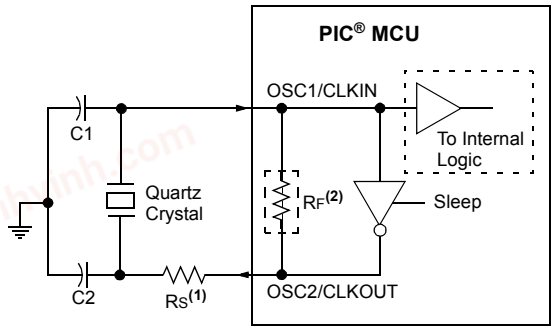


**Note 1:** A series resistor (RS) may be required for quartz crystals with low drive level.

**2:** The value of RF varies with the Oscillator mode selected (typically between 2 MΩ to 10 MΩ).

**Note 1:** Quartz crystal characteristics vary according to type, package and manufacturer. The user should consult the manufacturer data sheets for specifications and recommended application.

**2:** Always verify oscillator performance over the VDD and temperature range that is expected for the application.

**3:** For oscillator design assistance, reference the following Microchip Application Notes:

- AN826, "*Crystal Oscillator Basics and Crystal Selection for rfPIC® and PIC® Devices*" (DS00826)
- AN849, "*Basic PIC® Oscillator Design*" (DS00849)
- AN943, "*Practical PIC® Oscillator Analysis and Design*" (DS00943)
- AN949, "*Making Your Oscillator Work*" (DS00949)

**FIGURE 6-4: CERAMIC RESONATOR OPERATION (XT OR HS MODE)**

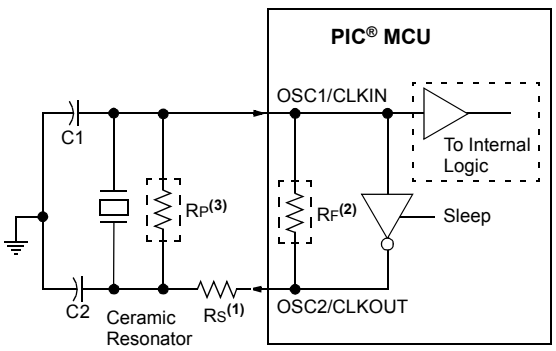


**Note 1:** A series resistor (RS) may be required for ceramic resonators with low drive level.

**2:** The value of RF varies with the Oscillator mode selected (typically between 2 MΩ to 10 MΩ).

**3:** An additional parallel feedback resistor (RP) may be required for proper ceramic resonator operation.

### 6.2.1.3 Oscillator Start-up Timer (OST)

If the oscillator module is configured for LP, XT or HS modes, the Oscillator Start-up Timer (OST) counts 1024 oscillations from OSC1. This occurs following a Power-on Reset (POR) and when the Power-up Timer (PWRT) has expired (if configured), or a wake-up from Sleep. During this time, the program counter does not increment and program execution is suspended, unless either FSCM or Two-Speed Start-Up are enabled. In this case, code will continue to execute at the selected INTOSC frequency while the OST is counting. The OST ensures that the oscillator circuit, using a quartz crystal resonator or ceramic resonator, has started and is providing a stable system clock to the oscillator module.

In order to minimize latency between external oscillator start-up and code execution, the Two-Speed Clock Start-up mode can be selected (see **Section 6.4 "Two-Speed Clock Start-up Mode"**).

 © 2013 Microchip Technology Inc.

chanhvinh.com



#### 6.2.1.4 4x PLL

The oscillator module contains a 4x PLL that can be used with both external and internal clock sources to provide a system clock source. The input frequency for the 4x PLL must fall within specifications. See the PLL Clock Timing Specifications in Table 32-9.

The 4x PLL may be enabled for use by one of two methods:

1. Program the PLLEN bit in Configuration Words to a '1'.
2. Write the SPLLEN bit in the OSCCON register to a '1'. If the PLLEN bit in Configuration Words is programmed to a '1', then the value of SPLLEN is ignored.

#### 6.2.1.5 Secondary Oscillator

The secondary oscillator is a separate crystal oscillator that is associated with the Timer1 peripheral. It is optimized for timekeeping operations with a 32.768 kHz crystal connected between the SOSCO and SOSCI device pins.

The secondary oscillator can be used as an alternate system clock source and can be selected during run-time using clock switching. Refer to **Section 6.3 "Clock Switching"** for more information.

**FIGURE 6-5: QUARTZ CRYSTAL OPERATION (SECONDARY OSCILLATOR)**

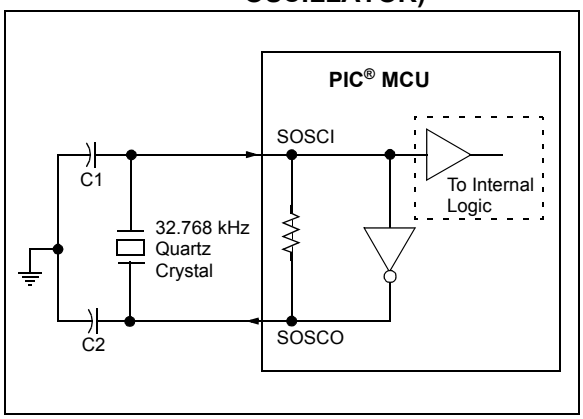


**Note 1:** Quartz crystal characteristics vary according to type, package and manufacturer. The user should consult the manufacturer data sheets for specifications and recommended application.

**2:** Always verify oscillator performance over the $V_{DD}$ and temperature range that is expected for the application.

**3:** For oscillator design assistance, reference the following Microchip Application Notes:

- AN826, "*Crystal Oscillator Basics and Crystal Selection for rfPIC® and PIC® Devices*" (DS00826)
- AN849, "*Basic PIC® Oscillator Design*" (DS00849)
- AN943, "*Practical PIC® Oscillator Analysis and Design*" (DS00943)
- AN949, "*Making Your Oscillator Work*" (DS00949)
- TB097, "*Interfacing a Micro Crystal MS1V-T1K 32.768 kHz Tuning Fork Crystal to a PIC16F690/SS*" (DS91097)
- AN1288, "*Design Practices for Low-Power External Oscillators*" (DS01288)

chanhvinh.com



#### 6.2.1.6 External RC Mode

The external Resistor-Capacitor (EXTRC) mode supports the use of an external RC circuit. This allows the designer maximum flexibility in frequency choice while keeping costs to a minimum when clock accuracy is not required.

The RC circuit connects to OSC1. OSC2/CLKOUT is available for general purpose I/O or CLKOUT. The function of the OSC2/CLKOUT pin is determined by the CLKOUTEN bit in Configuration Words.

Figure 6-6 shows the external RC mode connections.

**FIGURE 6-6: EXTERNAL RC MODES**

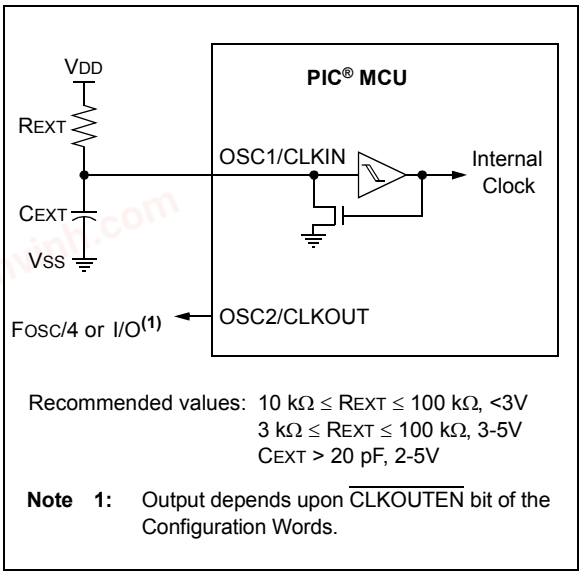


The RC oscillator frequency is a function of the supply voltage, the resistor (REXT) and capacitor (CEXT) values and the operating temperature. Other factors affecting the oscillator frequency are:

- threshold voltage variation
- component tolerances
- packaging variations in capacitance

The user also needs to take into account variation due to tolerance of external RC components used.

### 6.2.2 INTERNAL CLOCK SOURCES

The device may be configured to use the internal oscillator block as the system clock by performing one of the following actions:

- Program the FOSC<2:0> bits in Configuration Words to select the INTOSC clock source, which will be used as the default system clock upon a device Reset.
- Write the SCS<1:0> bits in the OSCCON register to switch the system clock source to the internal oscillator during run-time. See **Section 6.3 "Clock Switching"** for more information.

In **INTOSC** mode, OSC1/CLKIN is available for general purpose I/O. OSC2/CLKOUT is available for general purpose I/O or CLKOUT.

The function of the OSC2/CLKOUT pin is determined by the CLKOUTEN bit in Configuration Words.

The internal oscillator block has two independent oscillators and a dedicated Phase-Lock Loop, HFPLL that can produce one of three internal system clock sources.

1. The **HFINTOSC** (High-Frequency Internal Oscillator) is factory calibrated and operates at 16 MHz. The HFINTOSC source is generated from the 500 kHz MFINTOSC source and the dedicated Phase-Lock Loop, HFPLL. The frequency of the HFINTOSC can be user-adjusted via software using the OSCTUNE register (Register 6-3).
2. The **MFINTOSC** (Medium-Frequency Internal Oscillator) is factory calibrated and operates at 500 kHz. The frequency of the MFINTOSC can be user-adjusted via software using the OSCTUNE register (Register 6-3).
3. The **LFINTOSC** (Low-Frequency Internal Oscillator) is uncalibrated and operates at 31 kHz.

 © 2013 Microchip Technology Inc.

chanhvinh.com



#### 6.2.2.1 HFINTOSC

The High-Frequency Internal Oscillator (HFINTOSC) is a factory calibrated 16 MHz internal clock source. The frequency of the HFINTOSC can be altered via software using the OSCTUNE register (Register 6-3).

The output of the HFINTOSC connects to a postscaler and multiplexer (see Figure 6-1). One of multiple frequencies derived from the HFINTOSC can be selected via software using the IRCF<3:0> bits of the OSCCON register. See **Section 6.2.2.7 "Internal Oscillator Clock Switch Timing"** for more information.

The HFINTOSC is enabled by:

- Configure the IRCF<3:0> bits of the OSCCON register for the desired HF frequency, and
- FOSC<2:0> = 100, or
- Set the System Clock Source (SCS) bits of the OSCCON register to '1x'

A fast start-up oscillator allows internal circuits to power up and stabilize before switching to HFINTOSC.

The High-Frequency Internal Oscillator Ready bit (HFIOFR) of the OSCSTAT register indicates when the HFINTOSC is running.

The High-Frequency Internal Oscillator Status Locked bit (HFIOFL) of the OSCSTAT register indicates when the HFINTOSC is running within 2% of its final value.

The High-Frequency Internal Oscillator Stable bit (HFIOFS) of the OSCSTAT register indicates when the HFINTOSC is running within 0.5% of its final value.

#### 6.2.2.2 MFINTOSC

The Medium-Frequency Internal Oscillator (MFINTOSC) is a factory calibrated 500 kHz internal clock source. The frequency of the MFINTOSC can be altered via software using the OSCTUNE register (Register 6-3).

The output of the MFINTOSC connects to a postscaler and multiplexer (see Figure 6-1). One of nine frequencies derived from the MFINTOSC can be selected via software using the IRCF<3:0> bits of the OSCCON register. See **Section 6.2.2.7 "Internal Oscillator Clock Switch Timing"** for more information.

The MFINTOSC is enabled by:

- Configure the IRCF<3:0> bits of the OSCCON register for the desired HF frequency, and
- FOSC<2:0> = 100, or
- Set the System Clock Source (SCS) bits of the OSCCON register to '1x'

The Medium-Frequency Internal Oscillator Ready bit (MFIOFR) of the OSCSTAT register indicates when the MFINTOSC is running.

#### 6.2.2.3 Internal Oscillator Frequency Adjustment

The 500 kHz internal oscillator is factory calibrated. This internal oscillator can be adjusted in software by writing to the OSCTUNE register (Register 6-3). Since the HFINTOSC and MFINTOSC clock sources are derived from the 500 kHz internal oscillator a change in the OSCTUNE register value will apply to both.

The default value of the OSCTUNE register is '0'. The value is a 6-bit two's complement number. A value of 1Fh will provide an adjustment to the maximum frequency. A value of 20h will provide an adjustment to the minimum frequency.

When the OSCTUNE register is modified, the oscillator frequency will begin shifting to the new frequency. Code execution continues during this shift. There is no indication that the shift has occurred.

OSCTUNE does not affect the LFINTOSC frequency. Operation of features that depend on the LFINTOSC clock source frequency, such as the Power-up Timer (PWRT), Watchdog Timer (WDT), Fail-Safe Clock Monitor (FSCM) and peripherals, are *not* affected by the change in frequency.

#### 6.2.2.4 LFINTOSC

The Low-Frequency Internal Oscillator (LFINTOSC) is an uncalibrated 31 kHz internal clock source.

The output of the LFINTOSC connects to a multiplexer (see Figure 6-1). Select 31 kHz, via software, using the IRCF<3:0> bits of the OSCCON register. See **Section 6.2.2.7 "Internal Oscillator Clock Switch Timing"** for more information. The LFINTOSC is also the frequency for the Power-up Timer (PWRT), Watchdog Timer (WDT) and Fail-Safe Clock Monitor (FSCM).

The LFINTOSC is enabled by selecting 31 kHz (IRCF<3:0> bits of the OSCCON register = 000) as the system clock source (SCS bits of the OSCCON register = 1x), or when any of the following are enabled:

- Configure the IRCF<3:0> bits of the OSCCON register for the desired LF frequency, and
- FOSC<2:0> = 100, or
- Set the System Clock Source (SCS) bits of the OSCCON register to '1x'

Peripherals that use the LFINTOSC are:

- Power-up Timer (PWRT)
- Watchdog Timer (WDT)
- Fail-Safe Clock Monitor (FSCM)

The Low-Frequency Internal Oscillator Ready bit (LFIOFR) of the OSCSTAT register indicates when the LFINTOSC is running.

chanhvinh.com



#### 6.2.2.5 Internal Oscillator Frequency Selection

The system clock speed can be selected via software using the Internal Oscillator Frequency Select bits IRCF<3:0> of the OSCCON register.

The postscaled output of the 16 MHz HFINTOSC, 500 kHz MFINTOSC, and 31 kHz LFINTOSC connect to a multiplexer (see Figure 6-1). The Internal Oscillator Frequency Select bits IRCF<3:0> of the OSCCON register select the frequency output of the internal oscillators. One of the following frequencies can be selected via software:

- 32 MHz (requires 4x PLL)
- 16 MHz
- 8 MHz
- 4 MHz
- 2 MHz
- 1 MHz
- 500 kHz (default after Reset)
- 250 kHz
- 125 kHz
- 62.5 kHz
- 31.25 kHz
- 31 kHz (LFINTOSC)

| | |
|---|---|
| **Note:** | Following any Reset, the IRCF<3:0> bits of the OSCCON register are set to '0111' and the frequency selection is set to 500 kHz. The user can modify the IRCF bits to select a different frequency. |

The IRCF<3:0> bits of the OSCCON register allow duplicate selections for some frequencies. These duplicate choices can offer system design trade-offs. Lower power consumption can be obtained when changing oscillator sources for a given frequency. Faster transition times can be obtained between frequency changes that use the same oscillator source.

#### 6.2.2.6 32 MHz Internal Oscillator Frequency Selection

The Internal Oscillator Block can be used with the 4x PLL associated with the External Oscillator Block to produce a 32 MHz internal system clock source. The following settings are required to use the 32 MHz internal clock source:

- The FOSC bits in Configuration Words must be set to use the INTOSC source as the device system clock (FOSC<2:0> = 100).
- The SCS bits in the OSCCON register must be cleared to use the clock determined by FOSC<2:0> in Configuration Words (SCS<1:0> = 00).
- The IRCF bits in the OSCCON register must be set to the 8 MHz HFINTOSC set to use (IRCF<3:0> = 1110).
- The SPLLEN bit in the OSCCON register must be set to enable the 4x PLL, or the PLLEN bit of the Configuration Words must be programmed to a '1'.

| | |
|---|---|
| **Note:** | When using the PLLEN bit of the Configuration Words, the 4x PLL cannot be disabled by software and the SPLLEN option will not be available. |

The 4x PLL is not available for use with the internal oscillator when the SCS bits of the OSCCON register are set to '1x'. The SCS bits must be set to '00' to use the 4x PLL with the internal oscillator.

 © 2013 Microchip Technology Inc.

chanhvinh.com



#### 6.2.2.7 Internal Oscillator Clock Switch Timing

When switching between the HFINTOSC, MFINTOSC and the LFINTOSC, the new oscillator may already be shut down to save power (see Figure 6-7). If this is the case, there is a delay after the IRCF<3:0> bits of the OSCCON register are modified before the frequency selection takes place. The OSCSTAT register will reflect the current active status of the HFINTOSC, MFINTOSC and LFINTOSC oscillators. The sequence of a frequency selection is as follows:

1. IRCF<3:0> bits of the OSCCON register are modified.
2. If the new clock is shut down, a clock start-up delay is started.
3. Clock switch circuitry waits for a falling edge of the current clock.
4. The current clock is held low and the clock switch circuitry waits for a rising edge in the new clock.
5. The new clock is now active.
6. The OSCSTAT register is updated as required.
7. Clock switch is complete.

See Figure 6-7 for more details.

If the internal oscillator speed is switched between two clocks of the same source, there is no start-up delay before the new frequency is selected. Clock switching time delays are shown in Table 6-1.

Start-up delay specifications are located in the oscillator tables of **Section 32.0 "Electrical Specifications"**.

chanhvinh.com



**FIGURE 6-7: INTERNAL OSCILLATOR SWITCH TIMING**

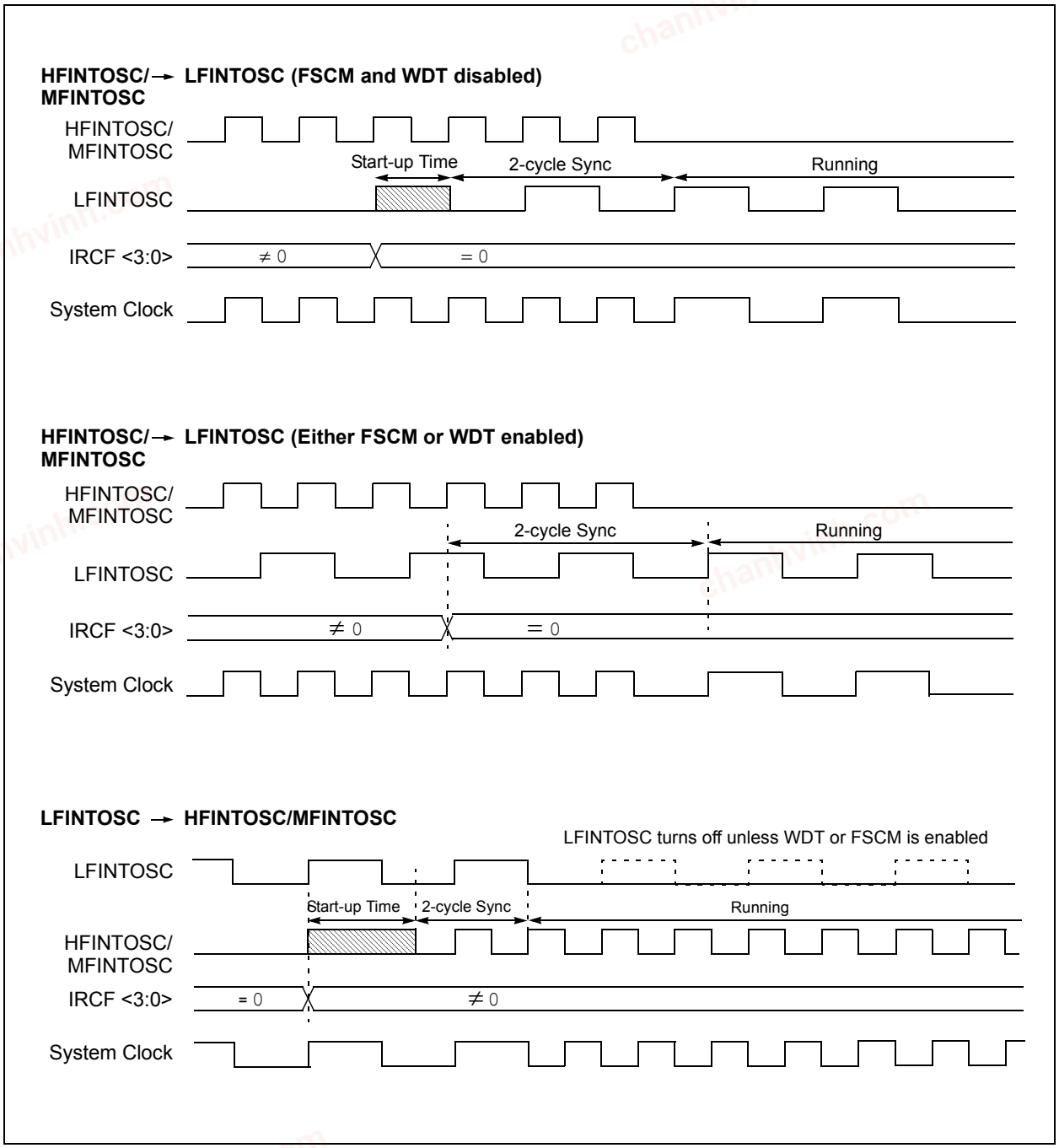


 © 2013 Microchip Technology Inc.

chanhvinh.com



## 6.3 Clock Switching

The system clock source can be switched between external and internal clock sources via software using the System Clock Select (SCS) bits of the OSCCON register. The following clock sources can be selected using the SCS bits:

- Default system oscillator determined by FOSC bits in Configuration Words
- Timer1 32 kHz crystal oscillator
- Internal Oscillator Block (INTOSC)

### 6.3.1 SYSTEM CLOCK SELECT (SCS) BITS

The System Clock Select (SCS) bits of the OSCCON register select the system clock source that is used for the CPU and peripherals.

- When the SCS bits of the OSCCON register = `00`, the system clock source is determined by the value of the FOSC<2:0> bits in the Configuration Words.
- When the SCS bits of the OSCCON register = `01`, the system clock source is the secondary oscillator.
- When the SCS bits of the OSCCON register = `1x`, the system clock source is chosen by the internal oscillator frequency selected by the IRCF<3:0> bits of the OSCCON register. After a Reset, the SCS bits of the OSCCON register are always cleared.

| | |
|---|---|
| **Note:** | Any automatic clock switch, which may occur from Two-Speed Start-up or Fail-Safe Clock Monitor, does not update the SCS bits of the OSCCON register. The user can monitor the OSTS bit of the OSCSTAT register to determine the current system clock source. |

When switching between clock sources, a delay is required to allow the new clock to stabilize. These oscillator delays are shown in Table 6-1.

### 6.3.2 OSCILLATOR START-UP TIMER STATUS (OSTS) BIT

The Oscillator Start-up Timer Status (OSTS) bit of the OSCSTAT register indicates whether the system clock is running from the external clock source, as defined by the FOSC<2:0> bits in the Configuration Words, or from the internal clock source. In particular, OSTS indicates that the Oscillator Start-up Timer (OST) has timed out for LP, XT or HS modes. The OST does not reflect the status of the secondary oscillator.

### 6.3.3 SECONDARY OSCILLATOR

The secondary oscillator is a separate crystal oscillator associated with the Timer1 peripheral. It is optimized for timekeeping operations with a 32.768 kHz crystal connected between the SOSCO and SOSCI device pins.

The secondary oscillator is enabled using the T1OSCEN control bit in the T1CON register. See **Section 25.0 "Timer1 Module with Gate Control"** for more information about the Timer1 peripheral.

### 6.3.4 SECONDARY OSCILLATOR READY (SOSCR) BIT

The user must ensure that the secondary oscillator is ready to be used before it is selected as a system clock source. The Secondary Oscillator Ready (SOSCR) bit of the OSCSTAT register indicates whether the secondary oscillator is ready to be used. After the SOSCR bit is set, the SCS bits can be configured to select the secondary oscillator.

chanhvinh.com



## 6.4 Two-Speed Clock Start-up Mode

Two-Speed Start-up mode provides additional power savings by minimizing the latency between external oscillator start-up and code execution. In applications that make heavy use of the Sleep mode, Two-Speed Start-up will remove the external oscillator start-up time from the time spent awake and can reduce the overall power consumption of the device. This mode allows the application to wake-up from Sleep, perform a few instructions using the INTOSC internal oscillator block as the clock source and go back to Sleep without waiting for the external oscillator to become stable.

Two-Speed Start-up provides benefits when the oscillator module is configured for LP, XT or HS modes. The Oscillator Start-up Timer (OST) is enabled for these modes and must count 1024 oscillations before the oscillator can be used as the system clock source.

If the oscillator module is configured for any mode other than LP, XT or HS mode, then Two-Speed Start-up is disabled. This is because the external clock oscillator does not require any stabilization time after POR or an exit from Sleep.

If the OST count reaches 1024 before the device enters Sleep mode, the OSTS bit of the OSCSTAT register is set and program execution switches to the external oscillator. However, the system may never operate from the external oscillator if the time spent awake is very short.

| | |
|---|---|
| **Note:** | Executing a `SLEEP` instruction will abort the oscillator start-up time and will cause the OSTS bit of the OSCSTAT register to remain clear. |

### 6.4.1 TWO-SPEED START-UP MODE CONFIGURATION

Two-Speed Start-up mode is configured by the following settings:

- IESO (of the Configuration Words) = `1`; Internal/External Switchover bit (Two-Speed Start-up mode enabled).
- SCS (of the OSCCON register) = `00`.
- FOSC<2:0> bits in the Configuration Words configured for LP, XT or HS mode.

Two-Speed Start-up mode is entered after:

- Power-on Reset (POR) and, if enabled, after Power-up Timer (PWRT) has expired, or
- Wake-up from Sleep.

**TABLE 6-1: OSCILLATOR SWITCHING DELAYS**

| Switch From | Switch To | Frequency | Oscillator Delay |
|---|---|---|---|
| Sleep/POR | LFINTOSC(1)<br>MFINTOSC(1)<br>HFINTOSC(1) | 31 kHz<br>31.25 kHz-500 kHz<br>31.25 kHz-16 MHz | Oscillator Warm-up Delay (TWARM) |
| Sleep/POR | EC, RC(1) | DC – 32 MHz | 2 cycles |
| LFINTOSC | EC, RC(1) | DC – 32 MHz | 1 cycle of each |
| Sleep/POR | Secondary Oscillator LP, XT, HS(1) | 32 kHz-20 MHz | 1024 Clock Cycles (OST) |
| Any clock source | MFINTOSC(1)<br>HFINTOSC(1) | 31.25 kHz-500 kHz<br>31.25 kHz-16 MHz | 2 μs (approx.) |
| Any clock source | LFINTOSC(1) | 31 kHz | 1 cycle of each |
| Any clock source | Secondary Oscillator | 32 kHz | 1024 Clock Cycles (OST) |
| PLL inactive | PLL active | 16-32 MHz | 2 ms (approx.) |

**Note 1:** PLL inactive.

 © 2013 Microchip Technology Inc.

chanhvinh.com



### 6.4.2 TWO-SPEED START-UP SEQUENCE

1. Wake-up from Power-on Reset or Sleep.
2. Instructions begin execution by the internal oscillator at the frequency set in the IRCF<3:0> bits of the OSCCON register.
3. OST enabled to count 1024 clock cycles.
4. OST timed out, wait for falling edge of the internal oscillator.
5. OSTS is set.
6. System clock held low until the next falling edge of new clock (LP, XT or HS mode).
7. System clock is switched to external clock source.

### 6.4.3 CHECKING TWO-SPEED CLOCK STATUS

Checking the state of the OSTS bit of the OSCSTAT register will confirm if the microcontroller is running from the external clock source, as defined by the FOSC<2:0> bits in the Configuration Words, or the internal oscillator.

**FIGURE 6-8: TWO-SPEED START-UP**

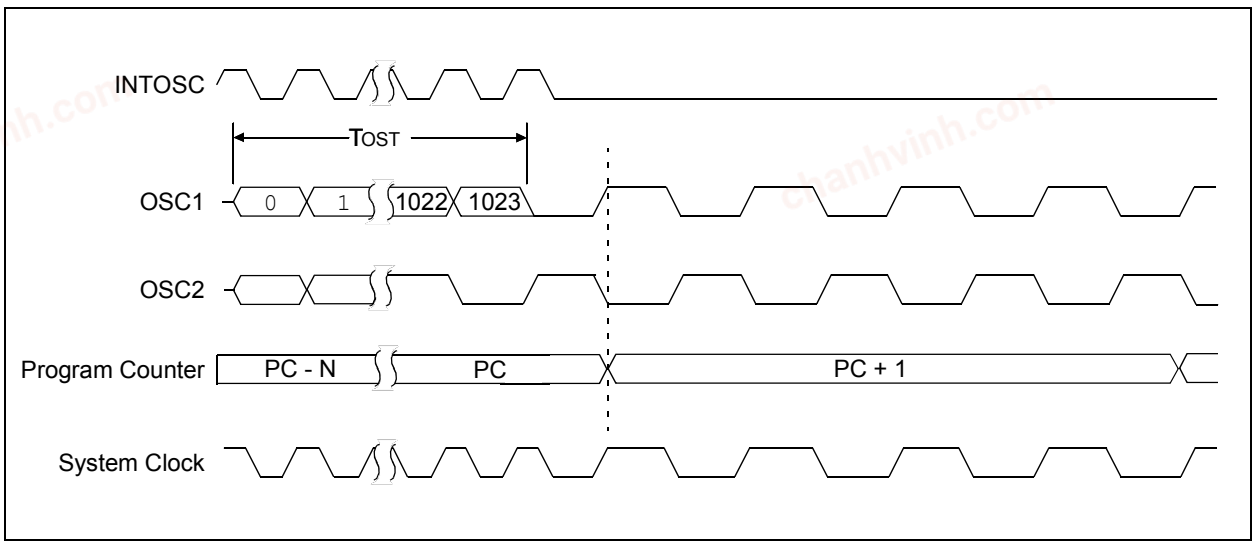

chanhvinh.com



## 6.5 Fail-Safe Clock Monitor

The Fail-Safe Clock Monitor (FSCM) allows the device to continue operating should the external oscillator fail. The FSCM can detect oscillator failure any time after the Oscillator Start-up Timer (OST) has expired. The FSCM is enabled by setting the FCMEN bit in the Configuration Words. The FSCM is applicable to all external Oscillator modes (LP, XT, HS, EC, Secondary Oscillator and RC).

**FIGURE 6-9: FSCM BLOCK DIAGRAM**

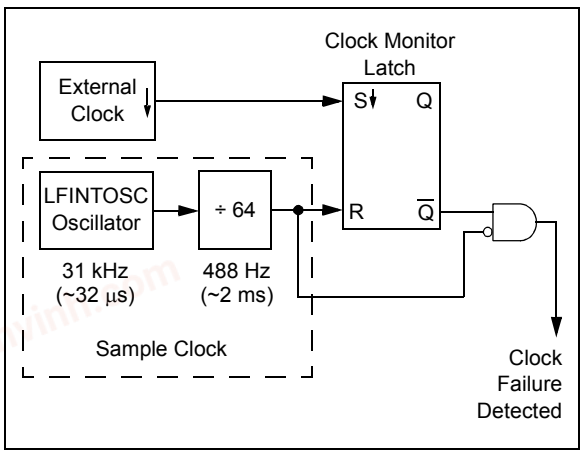


### 6.5.1 FAIL-SAFE DETECTION

The FSCM module detects a failed oscillator by comparing the external oscillator to the FSCM sample clock. The sample clock is generated by dividing the LFINTOSC by 64. See Figure 6-9. Inside the fail detector block is a latch. The external clock sets the latch on each falling edge of the external clock. The sample clock clears the latch on each rising edge of the sample clock. A failure is detected when an entire half-cycle of the sample clock elapses before the external clock goes low.

### 6.5.2 FAIL-SAFE OPERATION

When the external clock fails, the FSCM switches the device clock to an internal clock source and sets the bit flag OSFIF of the PIR2 register. Setting this flag will generate an interrupt if the OSFIE bit of the PIE2 register is also set. The device firmware can then take steps to mitigate the problems that may arise from a failed clock. The system clock will continue to be sourced from the internal clock source until the device firmware successfully restarts the external oscillator and switches back to external operation.

The internal clock source chosen by the FSCM is determined by the IRCF<3:0> bits of the OSCCON register. This allows the internal oscillator to be configured before a failure occurs.

### 6.5.3 FAIL-SAFE CONDITION CLEARING

The Fail-Safe condition is cleared after a Reset, executing a `SLEEP` instruction or changing the SCS bits of the OSCCON register. When the SCS bits are changed, the OST is restarted. While the OST is running, the device continues to operate from the INTOSC selected in OSCCON. When the OST times out, the Fail-Safe condition is cleared after successfully switching to the external clock source. The OSFIF bit should be cleared prior to switching to the external clock source. If the Fail-Safe condition still exists, the OSFIF flag will again become set by hardware.

### 6.5.4 RESET OR WAKE-UP FROM SLEEP

The FSCM is designed to detect an oscillator failure after the Oscillator Start-up Timer (OST) has expired. The OST is used after waking up from Sleep and after any type of Reset. The OST is not used with the EC or RC Clock modes so that the FSCM will be active as soon as the Reset or wake-up has completed. When the FSCM is enabled, the Two-Speed Start-up is also enabled. Therefore, the device will always be executing code while the OST is operating.

| | |
|---|---|
| **Note:** | Due to the wide range of oscillator start-up times, the Fail-Safe circuit is not active during oscillator start-up (i.e., after exiting Reset or Sleep). After an appropriate amount of time, the user should check the Status bits in the OSCSTAT register to verify the oscillator start-up and that the system clock switchover has successfully completed. |

 © 2013 Microchip Technology Inc.

chanhvinh.com



**FIGURE 6-10: FSCM TIMING DIAGRAM**

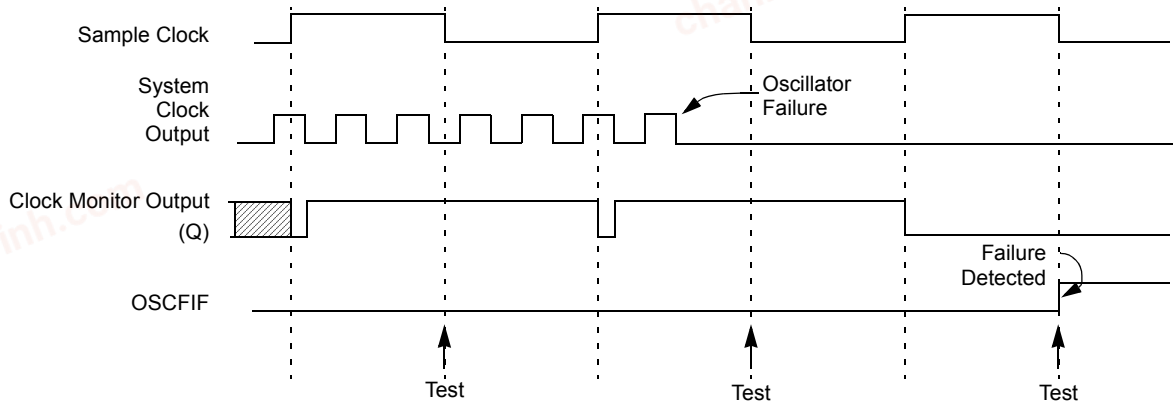


**Note:** The system clock is normally at a much higher frequency than the sample clock. The relative frequencies in this example have been chosen for clarity.

chanhvinh.com



## 6.6 Register Definitions: Oscillator Control

**REGISTER 6-1: OSCCON: OSCILLATOR CONTROL REGISTER**

| R/W-0/0 | R/W-0/0 | R/W-1/1 | R/W-1/1 | R/W-1/1 | U-0 | R/W-0/0 | R/W-0/0 |
|---|---|---|---|---|---|---|---|
| SPLLEN | IRCF<3:0> | | | | — | SCS<1:0> | |
| bit 7 | | | | | | | bit 0 |

| **Legend:** | | |
|---|---|---|
| R = Readable bit | W = Writable bit | U = Unimplemented bit, read as '0' |
| u = Bit is unchanged | x = Bit is unknown | -n/n = Value at POR and BOR/Value at all other Resets |
| '1' = Bit is set | '0' = Bit is cleared | |

bit 7 **SPLLEN:** Software PLL Enable bit
If PLLEN in Configuration Words = 1:
SPLLEN bit is ignored. 4x PLL is always enabled (subject to oscillator requirements)
If PLLEN in Configuration Words = 0:
1 = 4x PLL Is enabled
0 = 4x PLL is disabled

bit 6-3 **IRCF<3:0>:** Internal Oscillator Frequency Select bits
1111 = 16 MHz HF
1110 = 8 MHz or 32 MHz HF(2)
1101 = 4 MHz HF
1100 = 2 MHz HF
1011 = 1 MHz HF
1010 = 500 kHz HF(1)
1001 = 250 kHz HF(1)
1000 = 125 kHz HF(1)
0111 = 500 kHz MF (default upon Reset)
0110 = 250 kHz MF
0101 = 125 kHz MF
0100 = 62.5 kHz MF
0011 = 31.25 kHz HF(1)
0010 = 31.25 kHz MF
000x = 31 kHz LF

bit 2 **Unimplemented:** Read as '0'

bit 1-0 **SCS<1:0>:** System Clock Select bits
1x = Internal oscillator block
01 = Secondary oscillator
00 = Clock determined by FOSC<2:0> in Configuration Words

**Note 1:** Duplicate frequency derived from HFINTOSC.
**2:** 32 MHz when SPLLEN bit is set. Refer to **Section 6.2.2.6 "32 MHz Internal Oscillator Frequency Selection"**.

 © 2013 Microchip Technology Inc.

chanhvinh.com



**REGISTER 6-2: OSCSTAT: OSCILLATOR STATUS REGISTER**

| R-1/q | R-0/q | R-q/q | R-0/q | R-0/q | R-q/q | R-0/0 | R-0/q |
|---|---|---|---|---|---|---|---|
| SOSCR | PLLR | OSTS | HFIOFR | HFIOFL | MFIOFR | LFIOFR | HFIOFS |
| bit 7 | | | | | | | bit 0 |

| **Legend:** | | |
|---|---|---|
| R = Readable bit | W = Writable bit | U = Unimplemented bit, read as '0' |
| u = Bit is unchanged | x = Bit is unknown | -n/n = Value at POR and BOR/Value at all other Resets |
| '1' = Bit is set | '0' = Bit is cleared | q = Conditional |

bit 7 **SOSCR:** Secondary Oscillator Ready bit
If T1OSCEN = 1:
1 = Secondary oscillator is ready
0 = Secondary oscillator is not ready
If T1OSCEN = 0:
1 = Secondary clock source is always ready

bit 6 **PLLR** 4x PLL Ready bit
1 = 4x PLL is ready
0 = 4x PLL is not ready

bit 5 **OSTS:** Oscillator Start-up Timer Status bit
1 = Running from the clock defined by the FOSC<2:0> bits of the Configuration Words
0 = Running from an internal oscillator (FOSC<2:0> = 100)

bit 4 **HFIOFR:** High-Frequency Internal Oscillator Ready bit
1 = HFINTOSC is ready
0 = HFINTOSC is not ready

bit 3 **HFIOFL:** High-Frequency Internal Oscillator Locked bit
1 = HFINTOSC is at least 2% accurate
0 = HFINTOSC is not 2% accurate

bit 2 **MFIOFR:** Medium-Frequency Internal Oscillator Ready bit
1 = MFINTOSC is ready
0 = MFINTOSC is not ready

bit 1 **LFIOFR:** Low-Frequency Internal Oscillator Ready bit
1 = LFINTOSC is ready
0 = LFINTOSC is not ready

bit 0 **HFIOFS:** High-Frequency Internal Oscillator Stable bit
1 = HFINTOSC is at least 0.5% accurate
0 = HFINTOSC is not 0.5% accurate

chanhvinh.com



**REGISTER 6-3: OSCTUNE: OSCILLATOR TUNING REGISTER**

| U-0 | U-0 | R/W-0/0 | R/W-0/0 | R/W-0/0 | R/W-0/0 | R/W-0/0 | R/W-0/0 |
|---|---|---|---|---|---|---|---|
| — | — | TUN<5:0> | | | | | |
| bit 7 | | | | | | | bit 0 |

| **Legend:** | | |
|---|---|---|
| R = Readable bit | W = Writable bit | U = Unimplemented bit, read as '0' |
| u = Bit is unchanged | x = Bit is unknown | -n/n = Value at POR and BOR/Value at all other Resets |
| '1' = Bit is set | '0' = Bit is cleared | |

bit 7-6 **Unimplemented:** Read as '0'

bit 5-0 **TUN<5:0>:** Frequency Tuning bits

100000 = Minimum frequency
•
•
•
111111 =
000000 = Oscillator module is running at the factory-calibrated frequency
000001 =
•
•
•
011110 =
011111 = Maximum frequency

**TABLE 6-2: SUMMARY OF REGISTERS ASSOCIATED WITH CLOCK SOURCES**

| Name | Bit 7 | Bit 6 | Bit 5 | Bit 4 | Bit 3 | Bit 2 | Bit 1 | Bit 0 | Register on Page |
|---|---|---|---|---|---|---|---|---|---|
| OSCCON | SPLLEN | IRCF<3:0> | | | | — | SCS<1:0> | | 78 |
| OSCSTAT | SOSCR | PLLR | OSTS | HFIOFR | HFIOFL | MFIOFR | LFIOFR | HFIOFS | 79 |
| OSCTUNE | — | — | TUN<5:0> | | | | | | 80 |
| PIR2 | OSFIF | C2IF | C1IF | — | BCL1IF | TMR6IF | TMR4IF | CCP2IF | 91 |
| PIE2 | OSFIE | C2IE | C1IE | — | BCL1IE | TMR6IE | TMR4IE | CCP2IE | 88 |
| T1CON | TMR1CS<1:0> | | T1CKPS<1:0> | | T1OSCEN | $\overline{\text{T1SYNC}}$ | — | TMR1ON | 261 |

**Legend:** — = unimplemented location, read as '0'. Shaded cells are not used by clock sources.

**TABLE 6-3: SUMMARY OF CONFIGURATION WORD WITH CLOCK SOURCES**

| Name | Bits | Bit -/7 | Bit -/6 | Bit 13/5 | Bit 12/4 | Bit 11/3 | Bit 10/2 | Bit 9/1 | Bit 8/0 | Register on Page |
|---|---|---|---|---|---|---|---|---|---|---|
| CONFIG1 | 13:8 | — | — | FCMEN | IESO | $\overline{\text{CLKOUTEN}}$ | BOREN<1:0> | | — | 50 |
| | 7:0 | $\overline{\text{CP}}$ | MCLRE | $\overline{\text{PWRTE}}$ | WDTE<1:0> | | FOSC<2:0> | | | |

**Legend:** — = unimplemented location, read as '0'. Shaded cells are not used by clock sources.

 © 2013 Microchip Technology Inc.

chanhvinh.com



## 7.0 INTERRUPTS

The interrupt feature allows certain events to preempt normal program flow. Firmware is used to determine the source of the interrupt and act accordingly. Some interrupts can be configured to wake the MCU from Sleep mode.

This chapter contains the following information for Interrupts:

- Operation
- Interrupt Latency
- Interrupts During Sleep
- INT Pin
- Automatic Context Saving

Many peripherals produce interrupts. Refer to the corresponding chapters for details.

A block diagram of the interrupt logic is shown in Figure 7-1.

**FIGURE 7-1: INTERRUPT LOGIC**

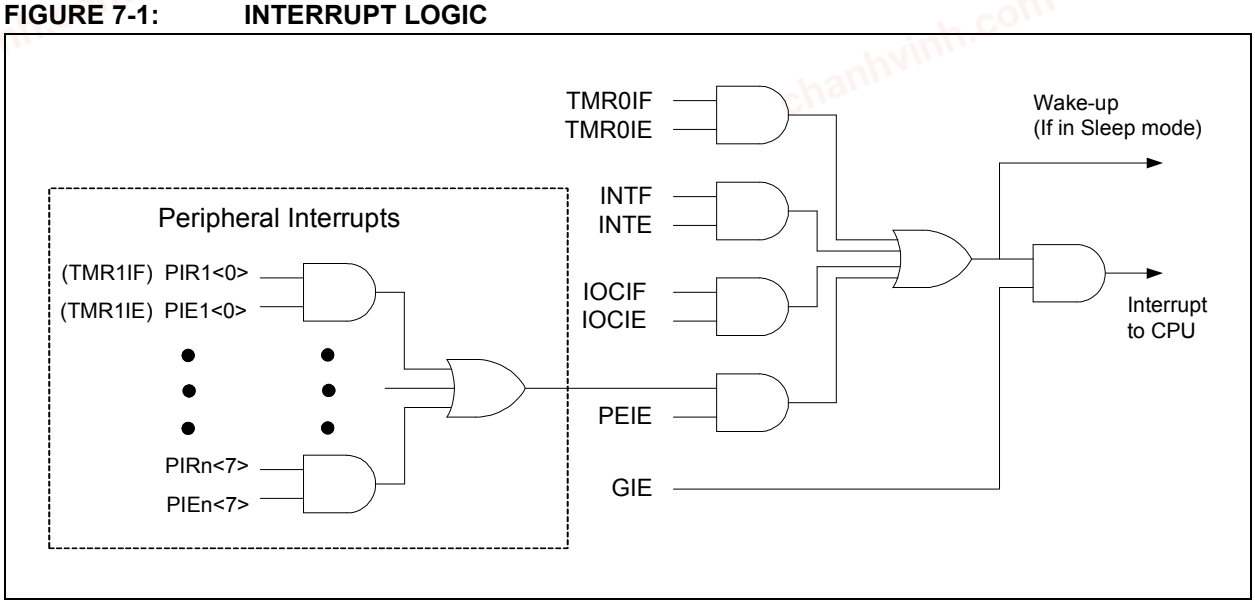

chanhvinh.com



## 7.1 Operation

Interrupts are disabled upon any device Reset. They are enabled by setting the following bits:

- GIE bit of the INTCON register
- Interrupt Enable bit(s) for the specific interrupt event(s)
- PEIE bit of the INTCON register (if the Interrupt Enable bit of the interrupt event is contained in the PIE1 or PIE2 registers)

The INTCON, PIR1 and PIR2 registers record individual interrupts via interrupt flag bits. Interrupt flag bits will be set, regardless of the status of the GIE, PEIE and individual interrupt enable bits.

The following events happen when an interrupt event occurs while the GIE bit is set:

- Current prefetched instruction is flushed
- GIE bit is cleared
- Current Program Counter (PC) is pushed onto the stack
- Critical registers are automatically saved to the shadow registers (See **"Section 7.5 "Automatic Context Saving"**)
- PC is loaded with the interrupt vector 0004h

The firmware within the Interrupt Service Routine (ISR) should determine the source of the interrupt by polling the interrupt flag bits. The interrupt flag bits must be cleared before exiting the ISR to avoid repeated interrupts. Because the GIE bit is cleared, any interrupt that occurs while executing the ISR will be recorded through its interrupt flag, but will not cause the processor to redirect to the interrupt vector.

The `RETFIE` instruction exits the ISR by popping the previous address from the stack, restoring the saved context from the shadow registers and setting the GIE bit.

For additional information on a specific interrupt's operation, refer to its peripheral chapter.

| | |
|---|---|
| **Note 1:** | Individual interrupt flag bits are set, regardless of the state of any other enable bits. |
| **2:** | All interrupts will be ignored while the GIE bit is cleared. Any interrupt occurring while the GIE bit is clear will be serviced when the GIE bit is set again. |

## 7.2 Interrupt Latency

Interrupt latency is defined as the time from when the interrupt event occurs to the time code execution at the interrupt vector begins. The latency for synchronous interrupts is three or four instruction cycles. For asynchronous interrupts, the latency is three to five instruction cycles, depending on when the interrupt occurs. See Figure 7-2 and Figure 7-3 for more details.

 © 2013 Microchip Technology Inc.

chanhvinh.com



**FIGURE 7-2: INTERRUPT LATENCY**

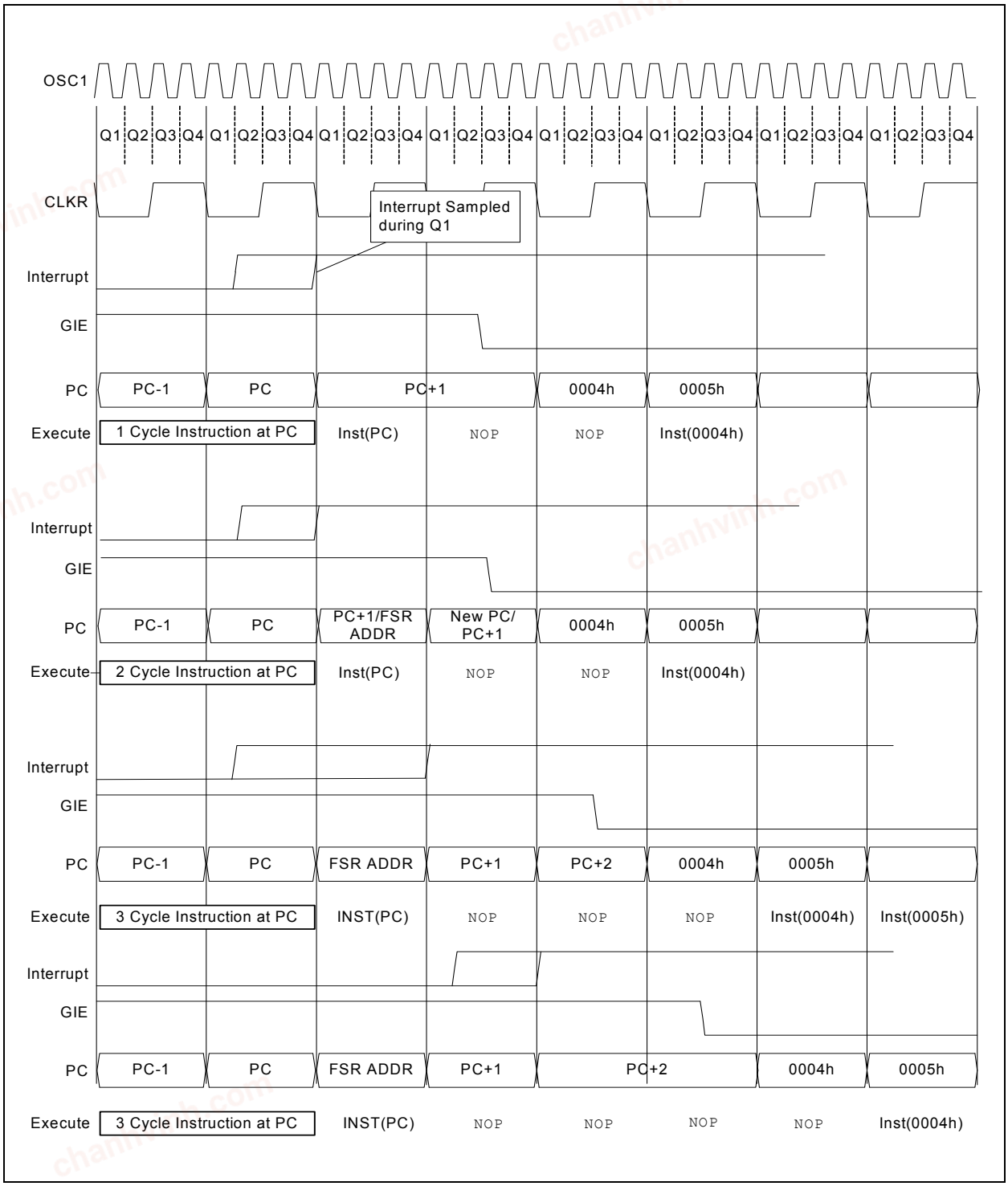

chanhvinh.com



**FIGURE 7-3: INT PIN INTERRUPT TIMING**

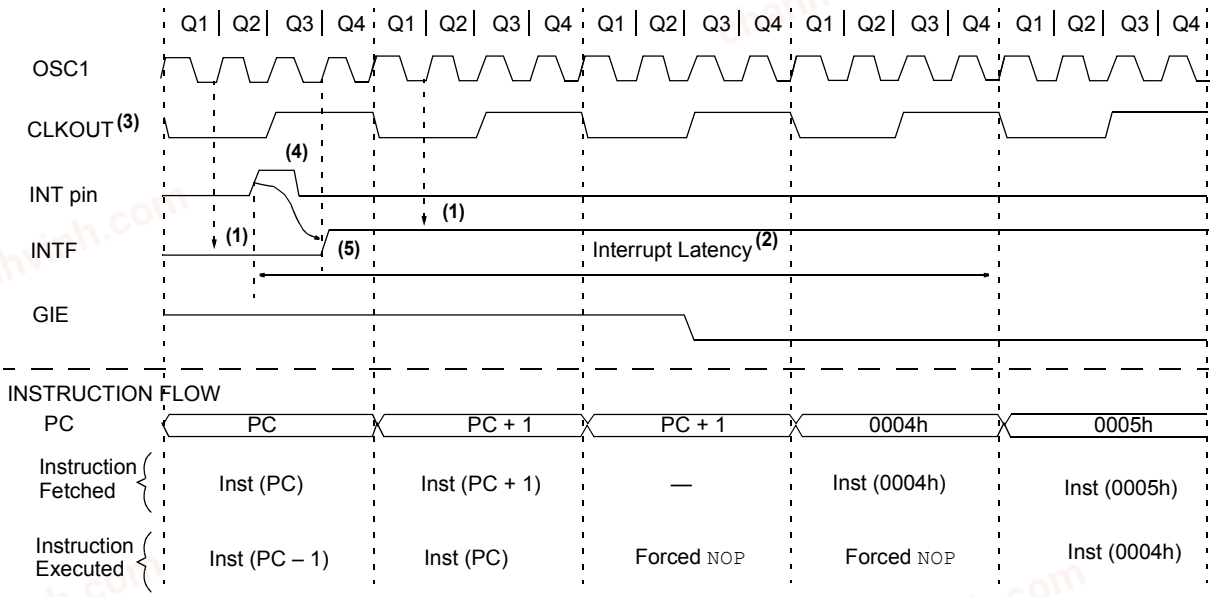


**Note 1:** INTF flag is sampled here (every Q1).

**2:** Asynchronous interrupt latency = 3-5 TCY. Synchronous latency = 3-4 TCY, where TCY = instruction cycle time. Latency is the same whether Inst (PC) is a single cycle or a 2-cycle instruction.

**3:** CLKOUT not available in all oscillator modes.

**4:** For minimum width of INT pulse, refer to AC specifications in **Section 32.0 "Electrical Specifications"**.

**5:** INTF is enabled to be set any time during the Q4-Q1 cycles.

 © 2013 Microchip Technology Inc.

chanhvinh.com



## 7.3 Interrupts During Sleep

Some interrupts can be used to wake from Sleep. To wake from Sleep, the peripheral must be able to operate without the system clock. The interrupt source must have the appropriate Interrupt Enable bit(s) set prior to entering Sleep.

On waking from Sleep, if the GIE bit is also set, the processor will branch to the interrupt vector. Otherwise, the processor will continue executing instructions after the `SLEEP` instruction. The instruction directly after the `SLEEP` instruction will always be executed before branching to the ISR. Refer to **Section 8.0 "Power-Down Mode (Sleep)"** for more details.

## 7.4 INT Pin

The INT pin can be used to generate an asynchronous edge-triggered interrupt. This interrupt is enabled by setting the INTE bit of the INTCON register. The INTEDG bit of the OPTION_REG register determines on which edge the interrupt will occur. When the INTEDG bit is set, the rising edge will cause the interrupt. When the INTEDG bit is clear, the falling edge will cause the interrupt. The INTF bit of the INTCON register will be set when a valid edge appears on the INT pin. If the GIE and INTE bits are also set, the processor will redirect program execution to the interrupt vector.

## 7.5 Automatic Context Saving

Upon entering an interrupt, the return PC address is saved on the stack. Additionally, the following registers are automatically saved in the shadow registers:

- W register
- STATUS register (except for $\overline{TO}$ and $\overline{PD}$)
- BSR register
- FSR registers
- PCLATH register

Upon exiting the Interrupt Service Routine, these registers are automatically restored. Any modifications to these registers during the ISR will be lost. If modifications to any of these registers are desired, the corresponding shadow register should be modified and the value will be restored when exiting the ISR. The shadow registers are available in Bank 31 and are readable and writable. Depending on the user's application, other registers may also need to be saved.

chanhvinh.com



## 7.6 Register Definitions: Interrupt Control

**REGISTER 7-1: INTCON: INTERRUPT CONTROL REGISTER**

| R/W-0/0 | R/W-0/0 | R/W-0/0 | R/W-0/0 | R/W-0/0 | R/W-0/0 | R/W-0/0 | R-0/0 |
|---|---|---|---|---|---|---|---|
| GIE | PEIE | TMR0IE | INTE | IOCIE | TMR0IF | INTF | IOCIF(1) |
| bit 7 | | | | | | | bit 0 |

| Legend: | | |
|---|---|---|
| R = Readable bit | W = Writable bit | U = Unimplemented bit, read as '0' |
| u = Bit is unchanged | x = Bit is unknown | -n/n = Value at POR and BOR/Value at all other Resets |
| '1' = Bit is set | '0' = Bit is cleared | |

bit 7 **GIE:** Global Interrupt Enable bit
1 = Enables all active interrupts
0 = Disables all interrupts

bit 6 **PEIE:** Peripheral Interrupt Enable bit
1 = Enables all active peripheral interrupts
0 = Disables all peripheral interrupts

bit 5 **TMR0IE:** Timer0 Overflow Interrupt Enable bit
1 = Enables the Timer0 interrupt
0 = Disables the Timer0 interrupt

bit 4 **INTE:** INT External Interrupt Enable bit
1 = Enables the INT external interrupt
0 = Disables the INT external interrupt

bit 3 **IOCIE:** Interrupt-on-Change Enable bit
1 = Enables the interrupt-on-change
0 = Disables the interrupt-on-change

bit 2 **TMR0IF:** Timer0 Overflow Interrupt Flag bit
1 = TMR0 register has overflowed
0 = TMR0 register did not overflow

bit 1 **INTF:** INT External Interrupt Flag bit
1 = The INT external interrupt occurred
0 = The INT external interrupt did not occur

bit 0 **IOCIF:** Interrupt-on-Change Interrupt Flag bit(1)
1 = When at least one of the interrupt-on-change pins changed state
0 = None of the interrupt-on-change pins have changed state

**Note 1:** The IOCIF Flag bit is read-only and cleared when all the interrupt-on-change flags in the IOCxF registers have been cleared by software.

**Note:** Interrupt flag bits are set when an interrupt condition occurs, regardless of the state of its corresponding enable bit or the Global Enable bit, GIE, of the INTCON register. User software should ensure the appropriate interrupt flag bits are clear prior to enabling an interrupt.

 © 2013 Microchip Technology Inc.

chanhvinh.com



**REGISTER 7-2: PIE1: PERIPHERAL INTERRUPT ENABLE REGISTER 1**

| R/W-0/0 | R/W-0/0 | R/W-0/0 | R/W-0/0 | R/W-0/0 | R/W-0/0 | R/W-0/0 | R/W-0/0 |
|---|---|---|---|---|---|---|---|
| TMR1GIE | ADIE | RCIE | TXIE | SSP1IE | CCP1IE | TMR2IE | TMR1IE |
| bit 7 | | | | | | | bit 0 |

| **Legend:** | | |
|---|---|---|
| R = Readable bit | W = Writable bit | U = Unimplemented bit, read as '0' |
| u = Bit is unchanged | x = Bit is unknown | -n/n = Value at POR and BOR/Value at all other Resets |
| '1' = Bit is set | '0' = Bit is cleared | |

bit 7 **TMR1GIE:** Timer1 Gate Interrupt Enable bit
1 = Enables the Timer1 gate acquisition interrupt
0 = Disables the Timer1 gate acquisition interrupt

bit 6 **ADIE:** Analog-to-Digital Converter (ADC) Interrupt Enable bit
1 = Enables the ADC interrupt
0 = Disables the ADC interrupt

bit 5 **RCIE:** USART Receive Interrupt Enable bit
1 = Enables the USART receive interrupt
0 = Disables the USART receive interrupt

bit 4 **TXIE:** USART Transmit Interrupt Enable bit
1 = Enables the USART transmit interrupt
0 = Disables the USART transmit interrupt

bit 3 **SSP1IE:** Synchronous Serial Port (MSSP) Interrupt Enable bit
1 = Enables the MSSP interrupt
0 = Disables the MSSP interrupt

bit 2 **CCP1IE:** CCP1 Interrupt Enable bit
1 = Enables the CCP1 interrupt
0 = Disables the CCP1 interrupt

bit 1 **TMR2IE:** TMR2 to PR2 Match Interrupt Enable bit
1 = Enables the Timer2 to PR2 match interrupt
0 = Disables the Timer2 to PR2 match interrupt

bit 0 **TMR1IE:** Timer1 Overflow Interrupt Enable bit
1 = Enables the Timer1 overflow interrupt
0 = Disables the Timer1 overflow interrupt

**Note:** Bit PEIE of the INTCON register must be set to enable any peripheral interrupt.

chanhvinh.com



**REGISTER 7-3: PIE2: PERIPHERAL INTERRUPT ENABLE REGISTER 2**

| R/W-0/0 | R/W-0/0 | R/W-0/0 | U-0 | R/W-0/0 | R/W-0/0 | R/W-0/0 | R/W-0/0 |
|---|---|---|---|---|---|---|---|
| OSFIE | C2IE | C1IE | — | BCL1IE | TMR6IE | TMR4IE | CCP2IE |
| bit 7 | | | | | | | bit 0 |

| **Legend:** | | |
|---|---|---|
| R = Readable bit | W = Writable bit | U = Unimplemented bit, read as '0' |
| u = Bit is unchanged | x = Bit is unknown | -n/n = Value at POR and BOR/Value at all other Resets |
| '1' = Bit is set | '0' = Bit is cleared | |

bit 7 **OSFIE:** Oscillator Fail Interrupt Enable bit
1 = Enables the Oscillator Fail interrupt
0 = Disables the Oscillator Fail interrupt

bit 6 **C2IE:** Comparator C2 Interrupt Enable bit
1 = Enables the Comparator C2 interrupt
0 = Disables the Comparator C2 interrupt

bit 5 **C1IE:** Comparator C1 Interrupt Enable bit
1 = Enables the Comparator C1 interrupt
0 = Disables the Comparator C1 interrupt

bit 4 **Unimplemented:** Read as '0'

bit 3 **BCL1IE:** MSSP Bus Collision Interrupt Enable bit
1 = Enables the MSSP Bus Collision Interrupt
0 = Disables the MSSP Bus Collision Interrupt

bit 2 **TMR6IE:** TMR6 to PR6 Match Interrupt Enable bit
1 = Enables the Timer6 to PR6 match interrupt
0 = Disables the Timer6 to PR6 match interrupt

bit 1 **TMR4IE:** TMR4to PR4 Match Interrupt Enable bit
1 = Enables the Timer4 to PR4 match interrupt
0 = Disables the Timer4 to PR4 match interrupt

bit 0 **CCP2IE:** CCP2 Interrupt Enable bit
1 = Enables the CCP2 interrupt
0 = Disables the CCP2 interrupt

**Note:** Bit PEIE of the INTCON register must be set to enable any peripheral interrupt.

 © 2013 Microchip Technology Inc.

chanhvinh.com



**REGISTER 7-4: PIE3: PERIPHERAL INTERRUPT ENABLE REGISTER 3**

| U-0 | U-0 | R/W-0/0 | R/W-0/0 | U-0 | R/W-0/0 | R/W-0/0 | R/W-0/0 |
|---|---|---|---|---|---|---|---|
| — | — | COGIE | ZCDIE | — | CLC3IE | CLC2IE | CLC1IE |
| bit 7 | | | | | | | bit 0 |

| **Legend:** | | |
|---|---|---|
| R = Readable bit | W = Writable bit | U = Unimplemented bit, read as '0' |
| u = Bit is unchanged | x = Bit is unknown | -n/n = Value at POR and BOR/Value at all other Resets |
| '1' = Bit is set | '0' = Bit is cleared | |

bit 7-6 **Unimplemented**: Read as '0'

bit 5 **COGIE:** COG Auto-Shutdown Interrupt Enable bit
1 = COG interrupt enabled
0 = COG interrupt disabled

bit 4 **ZCDIE:** Zero-Cross Detection Interrupt Enable bit
1 = ZCD interrupt enabled
0 = ZCD interrupt disabled

bit 3 **Unimplemented**: Read as '0'

bit 2 **CLC3IE:** CLC3 Interrupt Enable bit
1 = CLC3 interrupt enabled
0 = CLC3 interrupt disabled

bit 1 **CLC2IE:** CLC2 Interrupt Enable bit
1 = CLC2 interrupt enabled
0 = CLC2 interrupt disabled

bit 0 **CLC1IE:** CLC1 Interrupt Enable bit
1 = CLC1 interrupt enabled
0 = CLC1 interrupt disabled

**Note:** Bit PEIE of the INTCON register must be set to enable any peripheral interrupt.

chanhvinh.com



**REGISTER 7-5: PIR1: PERIPHERAL INTERRUPT REQUEST REGISTER 1**

| R/W-0/0 | R/W-0/0 | R-0/0 | R-0/0 | R/W-0/0 | R/W-0/0 | R/W-0/0 | R/W-0/0 |
|---|---|---|---|---|---|---|---|
| TMR1GIF | ADIF | RCIF | TXIF | SSP1IF | CCP1IF | TMR2IF | TMR1IF |
| bit 7 | | | | | | | bit 0 |

| **Legend:** | | |
|---|---|---|
| R = Readable bit | W = Writable bit | U = Unimplemented bit, read as '0' |
| u = Bit is unchanged | x = Bit is unknown | -n/n = Value at POR and BOR/Value at all other Resets |
| '1' = Bit is set | '0' = Bit is cleared | |

bit 7 **TMR1GIF:** Timer1 Gate Interrupt Flag bit
1 = Interrupt is pending
0 = Interrupt is not pending

bit 6 **ADIF:** Analog-to-Digital Converter (ADC) Interrupt Flag bit
1 = Interrupt is pending
0 = Interrupt is not pending

bit 5 **RCIF:** USART Receive Interrupt Flag bit
1 = Interrupt is pending
0 = Interrupt is not pending

bit 4 **TXIF:** USART Transmit Interrupt Flag bit
1 = Interrupt is pending
0 = Interrupt is not pending

bit 3 **SSP1IF:** Synchronous Serial Port (MSSP) Interrupt Flag bit
1 = Interrupt is pending
0 = Interrupt is not pending

bit 2 **CCP1IF:** CCP1 Interrupt Flag bit
1 = Interrupt is pending
0 = Interrupt is not pending

bit 1 **TMR2IF:** Timer2 to PR2 Interrupt Flag bit
1 = Interrupt is pending
0 = Interrupt is not pending

bit 0 **TMR1IF:** Timer1 Overflow Interrupt Flag bit
1 = Interrupt is pending
0 = Interrupt is not pending

**Note:** Interrupt flag bits are set when an interrupt condition occurs, regardless of the state of its corresponding enable bit or the Global Enable bit, GIE, of the INTCON register. User software should ensure the appropriate interrupt flag bits are clear prior to enabling an interrupt.

 © 2013 Microchip Technology Inc.

chanhvinh.com



**REGISTER 7-6: PIR2: PERIPHERAL INTERRUPT REQUEST REGISTER 2**

| R/W-0/0 | R/W-0/0 | R/W-0/0 | U-0 | R/W-0/0 | R/W-0/0 | R/W-0/0 | R/W-0/0 |
|---|---|---|---|---|---|---|---|
| OSFIF | C2IF | C1IF | — | BCL1IF | TMR6IF | TMR4IF | CCP2IF |
| bit 7 | | | | | | | bit 0 |

| **Legend:** | | |
|---|---|---|
| R = Readable bit | W = Writable bit | U = Unimplemented bit, read as '0' |
| u = Bit is unchanged | x = Bit is unknown | -n/n = Value at POR and BOR/Value at all other Resets |
| '1' = Bit is set | '0' = Bit is cleared | |

bit 7 **OSFIF:** Oscillator Fail Interrupt Flag bit
1 = Interrupt is pending
0 = Interrupt is not pending

bit 6 **C2IF:** Comparator C2 Interrupt Flag bit
1 = Interrupt is pending
0 = Interrupt is not pending

bit 5 **C1IF:** Comparator C1 Interrupt Flag bit
1 = Interrupt is pending
0 = Interrupt is not pending

bit 4 **Unimplemented:** Read as '0'

bit 3 **BCL1IF:** MSSP Bus Collision Interrupt Flag bit
1 = Interrupt is pending
0 = Interrupt is not pending

bit 2 **TMR6IF:** Timer6 to PR6 Interrupt Flag bit
1 = Interrupt is pending
0 = Interrupt is not pending

bit 1 **TMR4IF:** Timer4 to PR4 Interrupt Flag bit
1 = Interrupt is pending
0 = Interrupt is not pending

bit 0 **CCP2IF:** CCP2 Interrupt Flag bit
1 = Interrupt is pending
0 = Interrupt is not pending

**Note:** Interrupt flag bits are set when an interrupt condition occurs, regardless of the state of its corresponding enable bit or the Global Enable bit, GIE, of the INTCON register. User software should ensure the appropriate interrupt flag bits are clear prior to enabling an interrupt.

chanhvinh.com



**REGISTER 7-7: PIR3: PERIPHERAL INTERRUPT REQUEST REGISTER 3**

| U-0 | U-0 | R/W-0/0 | R/W-0/0 | U-0 | R/W-0/0 | R/W-0/0 | R/W-0/0 |
|---|---|---|---|---|---|---|---|
| — | — | COGIF | ZCDIF | — | CLC3IF | CLC2IF | CLC1IF |
| bit 7 | | | | | | | bit 0 |

| **Legend:** | | |
|---|---|---|
| R = Readable bit | W = Writable bit | U = Unimplemented bit, read as '0' |
| u = Bit is unchanged | x = Bit is unknown | -n/n = Value at POR and BOR/Value at all other Resets |
| '1' = Bit is set | '0' = Bit is cleared | |

bit 7-6 **Unimplemented**: Read as '0'

bit 5 **COGIF:** COG Auto-Shutdown Interrupt Flag bit
1 = Interrupt is pending
0 = Interrupt is not pending

bit 4 **ZCDIF:** Zero-Cross Detection Interrupt Flag bit
1 = Interrupt is pending
0 = Interrupt is not pending

bit 3 **Unimplemented**: Read as '0'

bit 2 **CLC3IF:** CLC3 Interrupt Flag bit
1 = Interrupt is pending
0 = Interrupt is not pending

bit 1 **CLC2IF:** CLC2 Interrupt Flag bit
1 = Interrupt is pending
0 = Interrupt is not pending

bit 0 **CLC1IF:** CLC1 Interrupt Flag bit
1 = Interrupt is pending
0 = Interrupt is not pending

**Note:** Interrupt flag bits are set when an interrupt condition occurs, regardless of the state of its corresponding enable bit or the Global Enable bit, GIE, of the INTCON register. User software should ensure the appropriate interrupt flag bits are clear prior to enabling an interrupt.

 © 2013 Microchip Technology Inc.

chanhvinh.com



**TABLE 7-1: SUMMARY OF REGISTERS ASSOCIATED WITH INTERRUPTS**

| Name | Bit 7 | Bit 6 | Bit 5 | Bit 4 | Bit 3 | Bit 2 | Bit 1 | Bit 0 | Register on Page |
|---|---|---|---|---|---|---|---|---|---|
| INTCON | GIE | PEIE | TMR0IE | INTE | IOCIE | TMR0IF | INTF | IOCIF | 86 |
| OPTION_REG | $\overline{\text{WPUEN}}$ | INTEDG | TMR0CS | TMR0SE | PSA | PS<2:0> | | | 251 |
| PIE1 | TMR1GIE | ADIE | RCIE | TXIE | SSP1IE | CCP1IE | TMR2IE | TMR1IE | 87 |
| PIE2 | OSFIE | C2IE | C1IE | — | BCL1IE | TMR6IE | TMR4IE | CCP2IE | 88 |
| PIE3 | — | — | COGIE | ZCDIE | — | CLC3IE | CLC2IE | CLC1IE | 89 |
| PIR1 | TMR1GIF | ADIF | RCIF | TXIF | SSP1IF | CCP1IF | TMR2IF | TMR1IF | 90 |
| PIR2 | OSFIF | C2IF | C1IF | — | BCL1IF | TMR6IF | TMR4IF | CCP2IF | 91 |
| PIR3 | — | — | COGIF | ZCDIF | — | CLC3IF | CLC2IF | CLC1IF | 92 |

**Legend:** — = unimplemented location, read as '0'. Shaded cells are not used by interrupts.

chanhvinh.com



**NOTES:**

chanhvinh.com

 © 2013 Microchip Technology Inc.

chanhvinh.com



## 8.0 POWER-DOWN MODE (SLEEP)

The Power-down mode is entered by executing a SLEEP instruction.

Upon entering Sleep mode, the following conditions exist:

1. WDT will be cleared but keeps running, if enabled for operation during Sleep.
2. $\overline{PD}$ bit of the STATUS register is cleared.
3. $\overline{TO}$ bit of the STATUS register is set.
4. CPU clock is disabled.
5. 31 kHz LFINTOSC is unaffected and peripherals that operate from it may continue operation in Sleep.
6. Timer1 and peripherals that operate from Timer1 continue operation in Sleep when the Timer1 clock source selected is:
   - LFINTOSC
   - T1CKI
   - Secondary oscillator
7. ADC is unaffected, if the dedicated FRC oscillator is selected.
8. I/O ports maintain the status they had before SLEEP was executed (driving high, low or high-impedance).
9. Resets other than WDT are not affected by Sleep mode.

Refer to individual chapters for more details on peripheral operation during Sleep.

To minimize current consumption, the following conditions should be considered:

- I/O pins should not be floating
- External circuitry sinking current from I/O pins
- Internal circuitry sourcing current from I/O pins
- Current draw from pins with internal weak pull-ups
- Modules using 31 kHz LFINTOSC
- Modules using secondary oscillator

I/O pins that are high-impedance inputs should be pulled to VDD or VSS externally to avoid switching currents caused by floating inputs.

Examples of internal circuitry that might be sourcing current include modules such as the DAC and FVR modules. See **Section 22.0 "8-Bit Digital-to-Analog Converter (DAC1) Module"** and **Section 14.0 "Fixed Voltage Reference (FVR)"** for more information on these modules.

### 8.1 Wake-up from Sleep

The device can wake-up from Sleep through one of the following events:

1. External Reset input on $\overline{MCLR}$ pin, if enabled
2. BOR Reset, if enabled
3. POR Reset
4. Watchdog Timer, if enabled
5. Any external interrupt
6. Interrupts by peripherals capable of running during Sleep (see individual peripheral for more information)

The first three events will cause a device Reset. The last three events are considered a continuation of program execution. To determine whether a device Reset or wake-up event occurred, refer to **Section 5.12 "Determining the Cause of a Reset"**.

When the SLEEP instruction is being executed, the next instruction (PC + 1) is prefetched. For the device to wake-up through an interrupt event, the corresponding interrupt enable bit must be enabled. Wake-up will occur regardless of the state of the GIE bit. If the GIE bit is disabled, the device continues execution at the instruction after the SLEEP instruction. If the GIE bit is enabled, the device executes the instruction after the SLEEP instruction, the device will then call the Interrupt Service Routine. In cases where the execution of the instruction following SLEEP is not desirable, the user should have a NOP after the SLEEP instruction.

The WDT is cleared when the device wakes up from Sleep, regardless of the source of wake-up.

chanhvinh.com



### 8.1.1 WAKE-UP USING INTERRUPTS

When global interrupts are disabled (GIE cleared) and any interrupt source has both its interrupt enable bit and interrupt flag bit set, one of the following will occur:

- If the interrupt occurs **before** the execution of a SLEEP instruction
  - SLEEP instruction will execute as a NOP
  - WDT and WDT prescaler will not be cleared
  - $\overline{TO}$ bit of the STATUS register will not be set
  - $\overline{PD}$ bit of the STATUS register will not be cleared
- If the interrupt occurs **during or after** the execution of a SLEEP instruction
  - SLEEP instruction will be completely executed
  - Device will immediately wake-up from Sleep
  - WDT and WDT prescaler will be cleared
  - $\overline{TO}$ bit of the STATUS register will be set
  - $\overline{PD}$ bit of the STATUS register will be cleared

Even if the flag bits were checked before executing a SLEEP instruction, it may be possible for flag bits to become set before the SLEEP instruction completes. To determine whether a SLEEP instruction executed, test the $\overline{PD}$ bit. If the $\overline{PD}$ bit is set, the SLEEP instruction was executed as a NOP.

**FIGURE 8-1: WAKE-UP FROM SLEEP THROUGH INTERRUPT**

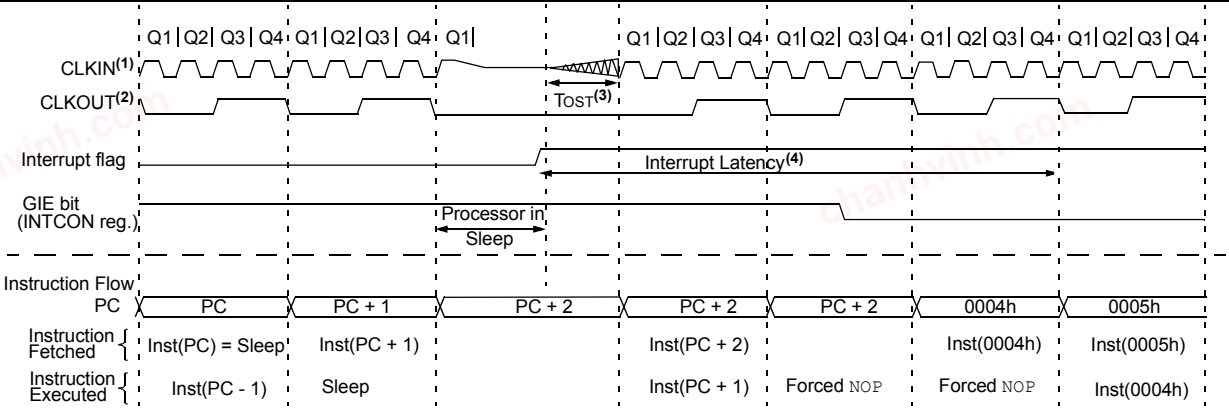


**Note 1:** External clock. High, Medium, Low mode assumed.
**2:** CLKOUT is shown here for timing reference.
**3:** TOST = 1024 TOSC. This delay does not apply to EC, RC and INTOSC Oscillator modes or Two-Speed Start-up (see **Section 6.4 "Two-Speed Clock Start-up Mode"**.
**4:** GIE = 1 assumed. In this case after wake-up, the processor calls the ISR at 0004h. If GIE = 0, execution will continue in-line.

 © 2013 Microchip Technology Inc.

chanhvinh.com



## 8.2 Low-Power Sleep Mode

The PIC16F1704/8 device contains an internal Low Dropout (LDO) voltage regulator, which allows the device I/O pins to operate at voltages up to 5.5V while the internal device logic operates at a lower voltage. The LDO and its associated reference circuitry must remain active when the device is in Sleep mode. The PIC16F1704/8 allows the user to optimize the operating current in Sleep, depending on the application requirements.

A Low-Power Sleep mode can be selected by setting the VREGPM bit of the VREGCON register. With this bit set, the LDO and reference circuitry are placed in a low-power state when the device is in Sleep.

### 8.2.1 SLEEP CURRENT VS. WAKE-UP TIME

In the default operating mode, the LDO and reference circuitry remain in the normal configuration while in Sleep. The device is able to exit Sleep mode quickly since all circuits remain active. In Low-Power Sleep mode, when waking up from Sleep, an extra delay time is required for these circuits to return to the normal configuration and stabilize.

The Low-Power Sleep mode is beneficial for applications that stay in Sleep mode for long periods of time. The normal mode is beneficial for applications that need to wake from Sleep quickly and frequently.

### 8.2.2 PERIPHERAL USAGE IN SLEEP

Some peripherals that can operate in Sleep mode will not operate properly with the Low-Power Sleep mode selected. The LDO will remain in the normal power mode when those peripherals are enabled. The Low-Power Sleep mode is intended for use with these peripherals:

- Brown-Out Reset (BOR)
- Watchdog Timer (WDT)
- External interrupt pin/Interrupt-on-change pins
- Timer1 (with external clock source)

| | |
|---|---|
| **Note:** | The PIC16LF1704/8 does not have a configurable Low-Power Sleep mode. PIC16LF1704/8 is an unregulated device and is always in the lowest power state when in Sleep, with no wake-up time penalty. This device has a lower maximum $V_{DD}$ and I/O voltage than the PIC16F1704/8. See **Section 32.0 "Electrical Specifications"** for more information. |

chanhvinh.com



## 8.3 Register Definitions: Voltage Regulator Control

### REGISTER 8-1: VREGCON: VOLTAGE REGULATOR CONTROL REGISTER(1)

| U-0 | U-0 | U-0 | U-0 | U-0 | U-0 | R/W-0/0 | R/W-1/1 |
|---|---|---|---|---|---|---|---|
| — | — | — | — | — | — | VREGPM | Reserved |
| bit 7 | | | | | | | bit 0 |

| Legend: | | |
|---|---|---|
| R = Readable bit | W = Writable bit | U = Unimplemented bit, read as '0' |
| u = Bit is unchanged | x = Bit is unknown | -n/n = Value at POR and BOR/Value at all other Resets |
| '1' = Bit is set | '0' = Bit is cleared | |

bit 7-2 **Unimplemented:** Read as '0'

bit 1 **VREGPM:** Voltage Regulator Power Mode Selection bit
- 1 = Low-Power Sleep mode enabled in Sleep(2)
  Draws lowest current in Sleep, slower wake-up
- 0 = Normal-Power mode enabled in Sleep(2)
  Draws higher current in Sleep, faster wake-up

bit 0 **Reserved:** Read as '1'. Maintain this bit set.

**Note 1:** PIC16F1704/8 only.
**2:** See **Section 32.0 "Electrical Specifications"**.

### TABLE 8-1: SUMMARY OF REGISTERS ASSOCIATED WITH POWER-DOWN MODE

| Name | Bit 7 | Bit 6 | Bit 5 | Bit 4 | Bit 3 | Bit 2 | Bit 1 | Bit 0 | Register on Page |
|---|---|---|---|---|---|---|---|---|---|
| INTCON | GIE | PEIE | TMR0IE | INTE | IOCIE | TMR0IF | INTF | IOCIF | 86 |
| IOCAP | — | — | IOCAP5 | IOCAP4 | IOCAP3 | IOCAP2 | IOCAP1 | IOCAP0 | 149 |
| IOCAN | — | — | IOCAN5 | IOCAN4 | IOCAN3 | IOCAN2 | IOCAN1 | IOCAN0 | 149 |
| IOCAF | — | — | IOCAF5 | IOCAF4 | IOCAF3 | IOCAF2 | IOCAF1 | IOCAF0 | 149 |
| IOCBP(1) | IOCBP7 | IOCBP6 | IOCBP5 | IOCBP4 | — | — | — | — | 150 |
| IOCBN(1) | IOCBN7 | IOCBN6 | IOCBN5 | IOCBN4 | — | — | — | — | 150 |
| IOCBF(1) | IOCBF7 | IOCBF6 | IOCBF5 | IOCBF4 | — | — | — | — | 150 |
| IOCCP | IOCCP7(1) | IOCCP6(1) | IOCCP5 | IOCCP4 | IOCCP3 | IOCCP2 | IOCCP1 | IOCCP0 | 151 |
| IOCCN | IOCCN7(1) | IOCCN6(1) | IOCCN5 | IOCCN4 | IOCCN3 | IOCCN2 | IOCCN1 | IOCCN0 | 151 |
| IOCCF | IOCCF7(1) | IOCCF6(1) | IOCCF5 | IOCCF4 | IOCCF3 | IOCCF2 | IOCCF1 | IOCCF0 | 151 |
| PIE1 | TMR1GIE | ADIE | RCIE | TXIE | SSP1IE | CCP1IE | TMR2IE | TMR1IE | 87 |
| PIE2 | OSFIE | C2IE | C1IE | — | BCL1IE | TMR6IE | TMR4IE | CCP2IE | 88 |
| PIE3 | — | — | COGIE | ZCDIE | — | CLC3IE | CLC2IE | CLC1IE | 89 |
| PIR1 | TMR1GIF | ADIF | RCIF | TXIF | SSP1IF | CCP1IF | TMR2IF | TMR1IF | 90 |
| PIR2 | OSFIF | C2IF | C1IF | — | BCL1IF | TMR6IF | TMR4IF | CCP2IF | 91 |
| PIR3 | — | — | COGIF | ZCDIF | — | CLC3IF | CLC2IF | CLC1IF | 92 |
| STATUS | — | — | — | $\overline{TO}$ | $\overline{PD}$ | Z | DC | C | 23 |
| VREGCON(2) | — | — | — | — | — | — | VREGPM | Reserved | 98 |
| WDTCON | — | — | WDTPS<4:0> | | | | | SWDTEN | 102 |

**Legend:** — = unimplemented location, read as '0'. Shaded cells are not used in Power-Down mode.
**Note 1:** PIC16(L)F1708 only.
**2:** PIC16F1704/8 only.

 © 2013 Microchip Technology Inc.

chanhvinh.com



## 9.0 WATCHDOG TIMER (WDT)

The Watchdog Timer is a system timer that generates a Reset if the firmware does not issue a CLRWDT instruction within the time-out period. The Watchdog Timer is typically used to recover the system from unexpected events.

The WDT has the following features:

- Independent clock source
- Multiple operating modes
  - WDT is always on
  - WDT is off when in Sleep
  - WDT is controlled by software
  - WDT is always off
- Configurable time-out period is from 1 ms to 256 seconds (nominal)
- Multiple Reset conditions
- Operation during Sleep

**FIGURE 9-1: WATCHDOG TIMER BLOCK DIAGRAM**

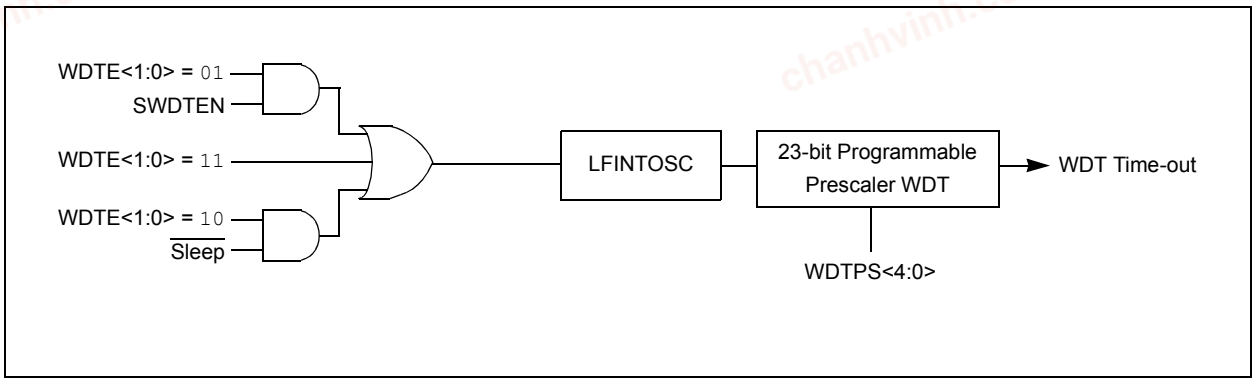

chanhvinh.com



## 9.1 Independent Clock Source

The WDT derives its time base from the 31 kHz LFINTOSC internal oscillator. Time intervals in this chapter are based on a nominal interval of 1 ms. See Table 32-8: Oscillator Parameters for the LFINTOSC specification.

## 9.2 WDT Operating Modes

The Watchdog Timer module has four operating modes controlled by the WDTE<1:0> bits in Configuration Words. See Table 9-1.

### 9.2.1 WDT IS ALWAYS ON

When the WDTE bits of Configuration Words are set to '11', the WDT is always on.

WDT protection is active during Sleep.

### 9.2.2 WDT IS OFF IN SLEEP

When the WDTE bits of Configuration Words are set to '10', the WDT is on, except in Sleep.

WDT protection is not active during Sleep.

### 9.2.3 WDT CONTROLLED BY SOFTWARE

When the WDTE bits of Configuration Words are set to '01', the WDT is controlled by the SWDTEN bit of the WDTCON register.

WDT protection is unchanged by Sleep. See Table 9-1 for more details.

**TABLE 9-1: WDT OPERATING MODES**

| WDTE<1:0> | SWDTEN | Device Mode | WDT Mode |
|---|---|---|---|
| 11 | X | X | Active |
| 10 | X | Awake | Active |
| | | Sleep | Disabled |
| 01 | 1 | X | Active |
| | 0 | | Disabled |
| 00 | X | X | Disabled |

## 9.3 Time-Out Period

The WDTPS bits of the WDTCON register set the time-out period from 1 ms to 256 seconds (nominal). After a Reset, the default time-out period is two seconds.

## 9.4 Clearing the WDT

The WDT is cleared when any of the following conditions occur:

- Any Reset
- CLRWDT instruction is executed
- Device enters Sleep
- Device wakes up from Sleep
- Oscillator fail
- WDT is disabled
- Oscillator Start-up Timer (OST) is running

See Table 9-2 for more information.

## 9.5 Operation During Sleep

When the device enters Sleep, the WDT is cleared. If the WDT is enabled during Sleep, the WDT resumes counting.

When the device exits Sleep, the WDT is cleared again. The WDT remains clear until the OST, if enabled, completes. See **Section 6.0 "Oscillator Module (with Fail-Safe Clock Monitor)"** for more information on the OST.

When a WDT time-out occurs while the device is in Sleep, no Reset is generated. Instead, the device wakes up and resumes operation. The $\overline{TO}$ and $\overline{PD}$ bits in the STATUS register are changed to indicate the event. See STATUS Register (Register 3-1) for more information.

 © 2013 Microchip Technology Inc.

chanhvinh.com



**TABLE 9-2: WDT CLEARING CONDITIONS**

| Conditions | WDT |
|---|---|
| WDTE<1:0> = 00 | Cleared |
| WDTE<1:0> = 01 and SWDTEN = 0 | |
| WDTE<1:0> = 10 and enter Sleep | |
| CLRWDT Command | |
| Oscillator Fail Detected | |
| Exit Sleep + System Clock = T1OSC, EXTRC, INTOSC, EXTCLK | |
| Exit Sleep + System Clock = XT, HS, LP | Cleared until the end of OST |
| Change INTOSC divider (IRCF bits) | Unaffected |

chanhvinh.com



## 9.6 Register Definitions: Watchdog Control

**REGISTER 9-1: WDTCON: WATCHDOG TIMER CONTROL REGISTER**

| U-0 | U-0 | R/W-0/0 | R/W-1/1 | R/W-0/0 | R/W-1/1 | R/W-1/1 | R/W-0/0 |
|---|---|---|---|---|---|---|---|
| — | — | WDTPS<4:0>(1) | | | | | SWDTEN |
| bit 7 | | | | | | | bit 0 |

| **Legend:** | | |
|---|---|---|
| R = Readable bit | W = Writable bit | U = Unimplemented bit, read as '0' |
| u = Bit is unchanged | x = Bit is unknown | -m/n = Value at POR and BOR/Value at all other Resets |
| '1' = Bit is set | '0' = Bit is cleared | |

bit 7-6 **Unimplemented:** Read as '0'

bit 5-1 **WDTPS<4:0>:** Watchdog Timer Period Select bits(1)

Bit Value = Prescale Rate

11111 = Reserved. Results in minimum interval (1:32)
•
•
•
10011 = Reserved. Results in minimum interval (1:32)

10010 = 1:8388608 ($2^{23}$) (Interval 256s nominal)
10001 = 1:4194304 ($2^{22}$) (Interval 128s nominal)
10000 = 1:2097152 ($2^{21}$) (Interval 64s nominal)
01111 = 1:1048576 ($2^{20}$) (Interval 32s nominal)
01110 = 1:524288 ($2^{19}$) (Interval 16s nominal)
01101 = 1:262144 ($2^{18}$) (Interval 8s nominal)
01100 = 1:131072 ($2^{17}$) (Interval 4s nominal)
01011 = 1:65536 (Interval 2s nominal) (Reset value)
01010 = 1:32768 (Interval 1s nominal)
01001 = 1:16384 (Interval 512 ms nominal)
01000 = 1:8192 (Interval 256 ms nominal)
00111 = 1:4096 (Interval 128 ms nominal)
00110 = 1:2048 (Interval 64 ms nominal)
00101 = 1:1024 (Interval 32 ms nominal)
00100 = 1:512 (Interval 16 ms nominal)
00011 = 1:256 (Interval 8 ms nominal)
00010 = 1:128 (Interval 4 ms nominal)
00001 = 1:64 (Interval 2 ms nominal)
00000 = 1:32 (Interval 1 ms nominal)

bit 0 **SWDTEN:** Software Enable/Disable for Watchdog Timer bit

If WDTE<1:0> = 1x:
This bit is ignored.
If WDTE<1:0> = 01:
1 = WDT is turned on
0 = WDT is turned off
If WDTE<1:0> = 00:
This bit is ignored.

**Note 1:** Times are approximate. WDT time is based on 31 kHz LFINTOSC.

 © 2013 Microchip Technology Inc.

chanhvinh.com



**TABLE 9-3: SUMMARY OF REGISTERS ASSOCIATED WITH WATCHDOG TIMER**

| Name | Bit 7 | Bit 6 | Bit 5 | Bit 4 | Bit 3 | Bit 2 | Bit 1 | Bit 0 | Register on Page |
|---|---|---|---|---|---|---|---|---|---|
| OSCCON | SPLLEN | IRCF<3:0> | | | | — | SCS<1:0> | | 78 |
| STATUS | — | — | — | $\overline{TO}$ | $\overline{PD}$ | Z | DC | C | 23 |
| WDTCON | — | — | WDTPS<4:0> | | | | | SWDTEN | 102 |

**Legend:** x = unknown, u = unchanged, – = unimplemented locations read as '0'. Shaded cells are not used by Watchdog Timer.

**TABLE 9-4: SUMMARY OF CONFIGURATION WORD WITH WATCHDOG TIMER**

| Name | Bits | Bit -/7 | Bit -/6 | Bit 13/5 | Bit 12/4 | Bit 11/3 | Bit 10/2 | Bit 9/1 | Bit 8/0 | Register on Page |
|---|---|---|---|---|---|---|---|---|---|---|
| CONFIG1 | 13:8 | — | — | FCMEN | IESO | $\overline{CLKOUTEN}$ | BOREN<1:0> | | — | 50 |
| | 7:0 | $\overline{CP}$ | MCLRE | $\overline{PWRTE}$ | WDTE<1:0> | | FOSC<2:0> | | | |

**Legend:** — = unimplemented location, read as '0'. Shaded cells are not used by Watchdog Timer.

chanhvinh.com



**NOTES:**

chanhvinh.com

 © 2013 Microchip Technology Inc.

chanhvinh.com



## 10.0 FLASH PROGRAM MEMORY CONTROL

The Flash program memory is readable and writable during normal operation over the full VDD range. Program memory is indirectly addressed using Special Function Registers (SFRs). The SFRs used to access program memory are:

- PMCON1
- PMCON2
- PMDATL
- PMDATH
- PMADRL
- PMADRH

When accessing the program memory, the PMDATH:PMDATL register pair forms a 2-byte word that holds the 14-bit data for read/write, and the PMADRH:PMADRL register pair forms a 2-byte word that holds the 15-bit address of the program memory location being read.

The write time is controlled by an on-chip timer. The write/erase voltages are generated by an on-chip charge pump rated to operate over the operating voltage range of the device.

The Flash program memory can be protected in two ways; by code protection (CP bit in Configuration Words) and write protection (WRT<1:0> bits in Configuration Words).

Code protection ($\overline{CP}$ = 0)(1), disables access, reading and writing, to the Flash program memory via external device programmers. Code protection does not affect the self-write and erase functionality. Code protection can only be reset by a device programmer performing a Bulk Erase to the device, clearing all Flash program memory, Configuration bits and User IDs.

Write protection prohibits self-write and erase to a portion or all of the Flash program memory as defined by the bits WRT<1:0>. Write protection does not affect a device programmers ability to read, write or erase the device.

| | |
|---|---|
| **Note 1:** | Code protection of the entire Flash program memory array is enabled by clearing the $\overline{CP}$ bit of Configuration Words. |

## 10.1 PMADRL and PMADRH Registers

The PMADRH:PMADRL register pair can address up to a maximum of 32K words of program memory. When selecting a program address value, the MSB of the address is written to the PMADRH register and the LSB is written to the PMADRL register.

### 10.1.1 PMCON1 AND PMCON2 REGISTERS

PMCON1 is the control register for Flash program memory accesses.

Control bits RD and WR initiate read and write, respectively. These bits cannot be cleared, only set, in software. They are cleared by hardware at completion of the read or write operation. The inability to clear the WR bit in software prevents the accidental, premature termination of a write operation.

The WREN bit, when set, will allow a write operation to occur. On power-up, the WREN bit is clear. The WRERR bit is set when a write operation is interrupted by a Reset during normal operation. In these situations, following Reset, the user can check the WRERR bit and execute the appropriate error handling routine.

The PMCON2 register is a write-only register. Attempting to read the PMCON2 register will return all '0's.

To enable writes to the program memory, a specific pattern (the unlock sequence), must be written to the PMCON2 register. The required unlock sequence prevents inadvertent writes to the program memory write latches and Flash program memory.

## 10.2 Flash Program Memory Overview

It is important to understand the Flash program memory structure for erase and programming operations. Flash program memory is arranged in rows. A row consists of a fixed number of 14-bit program memory words. A row is the minimum size that can be erased by user software.

After a row has been erased, the user can reprogram all or a portion of this row. Data to be written into the program memory row is written to 14-bit wide data write latches. These write latches are not directly accessible to the user, but may be loaded via sequential writes to the PMDATH:PMDATL register pair.

| | |
|---|---|
| **Note:** | If the user wants to modify only a portion of a previously programmed row, then the contents of the entire row must be read and saved in RAM prior to the erase. Then, new data and retained data can be written into the write latches to reprogram the row of Flash program memory. However, any unprogrammed locations can be written without first erasing the row. In this case, it is not necessary to save and rewrite the other previously programmed locations. |

See Table 10-1 for Erase Row size and the number of write latches for Flash program memory.

chanhvinh.com



**TABLE 10-1: FLASH MEMORY ORGANIZATION BY DEVICE**

| Device | Row Erase (words) | Write Latches (words) |
|---|---|---|
| PIC16(L)F1704 | 32 | 32 |
| PIC16(L)F1708 | | |

### 10.2.1 READING THE FLASH PROGRAM MEMORY

To read a program memory location, the user must:

1. Write the desired address to the PMADRH:PMADRL register pair.
2. Clear the CFGS bit of the PMCON1 register.
3. Then, set control bit RD of the PMCON1 register.

Once the read control bit is set, the program memory Flash controller will use the second instruction cycle to read the data. This causes the second instruction immediately following the "`BSF PMCON1,RD`" instruction to be ignored. The data is available in the very next cycle, in the PMDATH:PMDATL register pair; therefore, it can be read as two bytes in the following instructions.

PMDATH:PMDATL register pair will hold this value until another read or until it is written to by the user.

**Note:** The two instructions following a program memory read are required to be `NOP`s. This prevents the user from executing a 2-cycle instruction on the next instruction after the RD bit is set.

**FIGURE 10-1: FLASH PROGRAM MEMORY READ FLOWCHART**

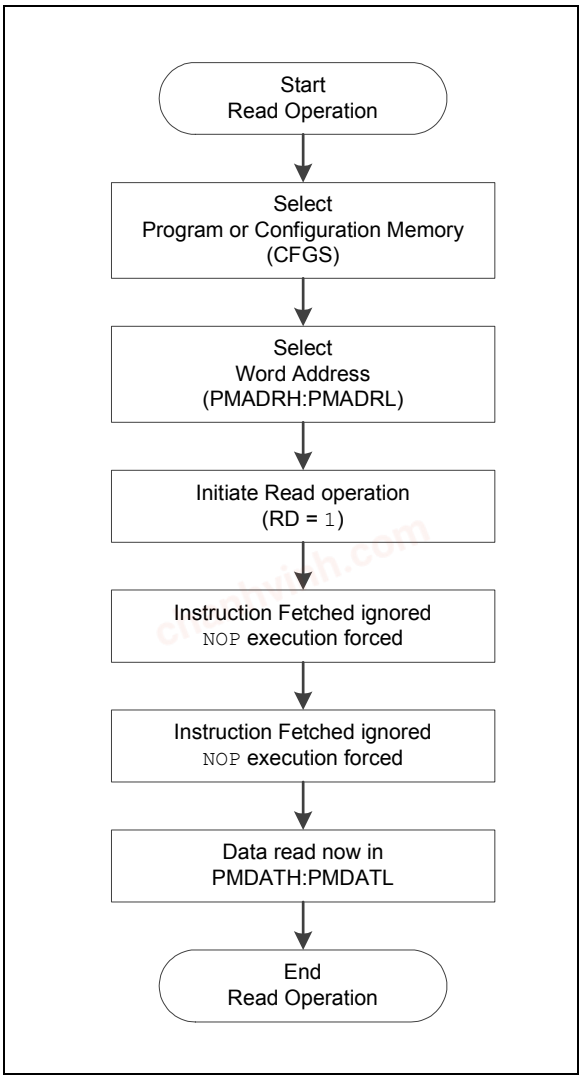


 © 2013 Microchip Technology Inc.

chanhvinh.com



**FIGURE 10-2: FLASH PROGRAM MEMORY READ CYCLE EXECUTION**

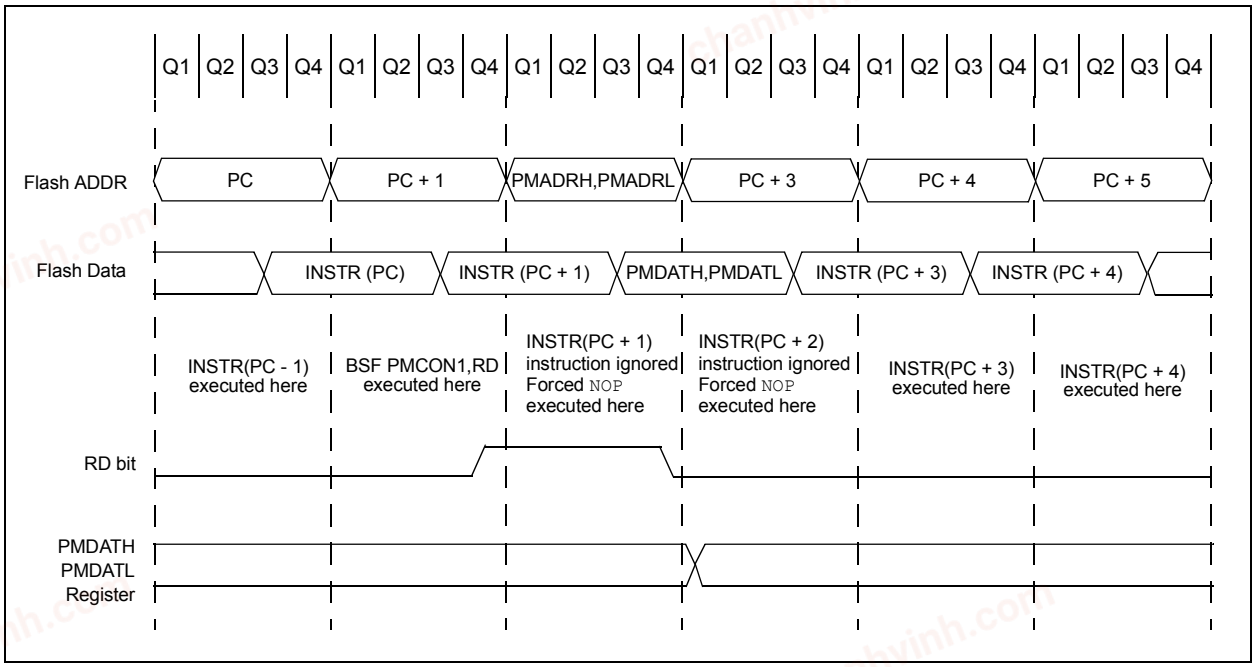


**EXAMPLE 10-1: FLASH PROGRAM MEMORY READ**

```
* This code block will read 1 word of program
* memory at the memory address:
    PROG_ADDR_HI : PROG_ADDR_LO
*   data will be returned in the variables;
*   PROG_DATA_HI, PROG_DATA_LO

    BANKSEL  PMADRL          ; Select Bank for PMCON registers
    MOVLW    PROG_ADDR_LO    ;
    MOVWF    PMADRL          ; Store LSB of address
    MOVLW    PROG_ADDR_HI    ;
    MOVWF    PMADRH          ; Store MSB of address

    BCF      PMCON1,CFGS     ; Do not select Configuration Space
    BSF      PMCON1,RD       ; Initiate read
    NOP                      ; Ignored (Figure 10-1)
    NOP                      ; Ignored (Figure 10-1)

    MOVF     PMDATL,W        ; Get LSB of word
    MOVWF    PROG_DATA_LO    ; Store in user location
    MOVF     PMDATH,W        ; Get MSB of word
    MOVWF    PROG_DATA_HI    ; Store in user location
```

chanhvinh.com



### 10.2.2 FLASH MEMORY UNLOCK SEQUENCE

The unlock sequence is a mechanism that protects the Flash program memory from unintended self-write programming or erasing. The sequence must be executed and completed without interruption to successfully complete any of the following operations:

- Row Erase
- Load program memory write latches
- Write of program memory write latches to program memory
- Write of program memory write latches to User IDs

The unlock sequence consists of the following steps:

1. Write 55h to PMCON2
2. Write AAh to PMCON2
3. Set the WR bit in PMCON1
4. `NOP` instruction
5. `NOP` instruction

Once the WR bit is set, the processor will always force two `NOP` instructions. When an Erase Row or Program Row operation is being performed, the processor will stall internal operations (typical 2 ms), until the operation is complete and then resume with the next instruction. When the operation is loading the program memory write latches, the processor will always force the two `NOP` instructions and continue uninterrupted with the next instruction.

Since the unlock sequence must not be interrupted, global interrupts should be disabled prior to the unlock sequence and re-enabled after the unlock sequence is completed.

**FIGURE 10-3: FLASH PROGRAM MEMORY UNLOCK SEQUENCE FLOWCHART**

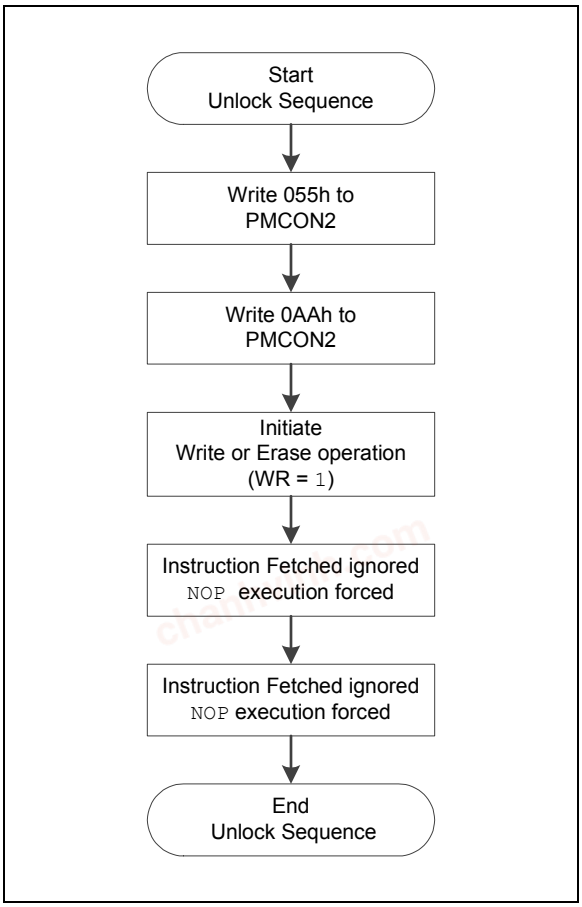


 © 2013 Microchip Technology Inc.

chanhvinh.com



### 10.2.3 ERASING FLASH PROGRAM MEMORY

While executing code, program memory can only be erased by rows. To erase a row:

1. Load the PMADRH:PMADRL register pair with any address within the row to be erased.
2. Clear the CFGS bit of the PMCON1 register.
3. Set the FREE and WREN bits of the PMCON1 register.
4. Write 55h, then AAh, to PMCON2 (Flash programming unlock sequence).
5. Set control bit WR of the PMCON1 register to begin the erase operation.

See Example 10-2.

After the "`BSF PMCON1,WR`" instruction, the processor requires two cycles to set up the erase operation. The user must place two `NOP` instructions immediately following the WR bit set instruction. The processor will halt internal operations for the typical 2 ms erase time. This is not Sleep mode as the clocks and peripherals will continue to run. After the erase cycle, the processor will resume operation with the third instruction after the PMCON1 write instruction.

**FIGURE 10-4: FLASH PROGRAM MEMORY ERASE FLOWCHART**

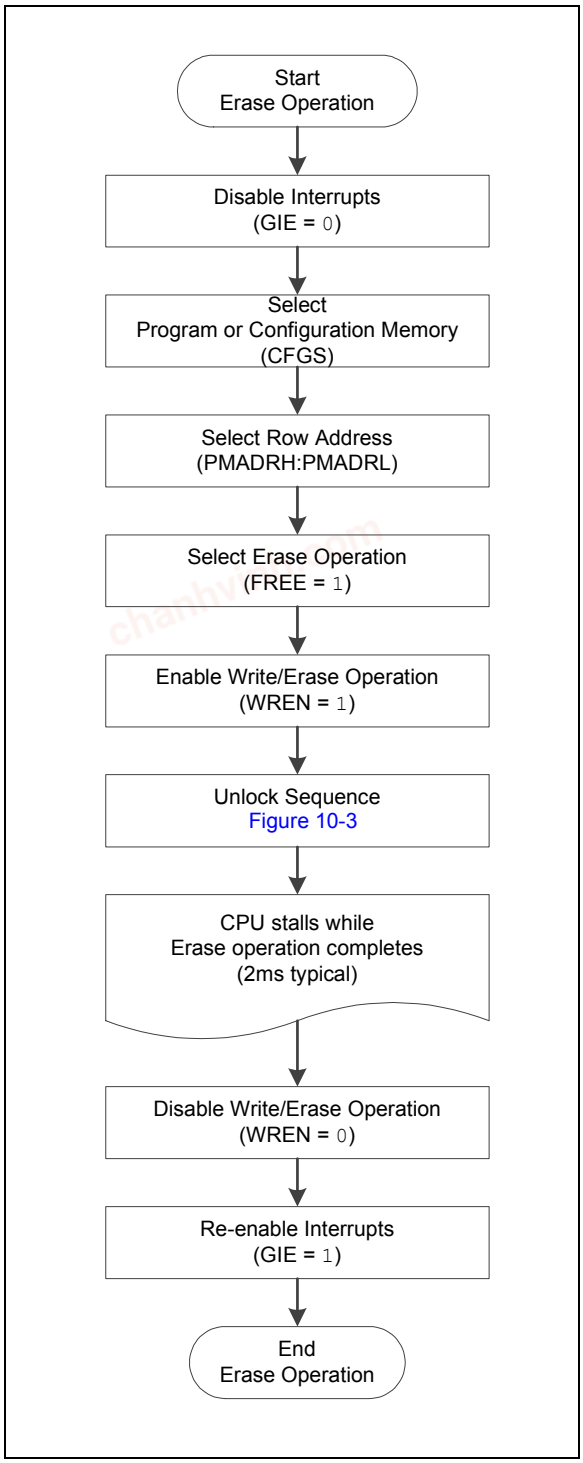

chanhvinh.com



**EXAMPLE 10-2: ERASING ONE ROW OF PROGRAM MEMORY**

```
; This row erase routine assumes the following:
; 1. A valid address within the erase row is loaded in ADDRH:ADDRL
; 2. ADDRH and ADDRL are located in shared data memory 0x70 - 0x7F (common RAM)


        BCF         INTCON,GIE      ; Disable ints so required sequences will execute properly
        BANKSEL     PMADRL
        MOVF        ADDRL,W         ; Load lower 8 bits of erase address boundary
        MOVWF       PMADRL
        MOVF        ADDRH,W         ; Load upper 6 bits of erase address boundary
        MOVWF       PMADRH
        BCF         PMCON1,CFGS     ; Not configuration space
        BSF         PMCON1,FREE     ; Specify an erase operation
        BSF         PMCON1,WREN     ; Enable writes

Required
Sequence
        MOVLW       55h             ; Start of required sequence to initiate erase
        MOVWF       PMCON2          ; Write 55h
        MOVLW       0AAh            ;
        MOVWF       PMCON2          ; Write AAh
        BSF         PMCON1,WR       ; Set WR bit to begin erase
        NOP                         ; NOP instructions are forced as processor starts
        NOP                         ; row erase of program memory.
                                    ;
                                    ; The processor stalls until the erase process is complete
                                    ; after erase processor continues with 3rd instruction

        BCF         PMCON1,WREN     ; Disable writes
        BSF         INTCON,GIE      ; Enable interrupts
```

 © 2013 Microchip Technology Inc.

chanhvinh.com



### 10.2.4 WRITING TO FLASH PROGRAM MEMORY

Program memory is programmed using the following steps:

1. Load the address in PMADRH:PMADRL of the row to be programmed.
2. Load each write latch with data.
3. Initiate a programming operation.
4. Repeat steps 1 through 3 until all data is written.

Before writing to program memory, the word(s) to be written must be erased or previously unwritten. Program memory can only be erased one row at a time. No automatic erase occurs upon the initiation of the write.

Program memory can be written one or more words at a time. The maximum number of words written at one time is equal to the number of write latches. See Figure 10-5 (row writes to program memory with 32 write latches) for more details.

The write latches are aligned to the Flash row address boundary defined by the upper 10-bits of PMADRH:PMADRL, (PMADRH<6:0>:PMADRL<7:5>) with the lower five bits of PMADRL, (PMADRL<4:0>) determining the write latch being loaded. Write operations do not cross these boundaries. At the completion of a program memory write operation, the data in the write latches is reset to contain 0x3FFF.

The following steps should be completed to load the write latches and program a row of program memory. These steps are divided into two parts. First, each write latch is loaded with data from the PMDATH:PMDATL using the unlock sequence with LWLO = 1. When the last word to be loaded into the write latch is ready, the LWLO bit is cleared and the unlock sequence executed. This initiates the programming operation, writing all the latches into Flash program memory.

| | |
|---|---|
| **Note:** | The special unlock sequence is required to load a write latch with data or initiate a Flash programming operation. If the unlock sequence is interrupted, writing to the latches or program memory will not be initiated. |

1. Set the WREN bit of the PMCON1 register.
2. Clear the CFGS bit of the PMCON1 register.
3. Set the LWLO bit of the PMCON1 register. When the LWLO bit of the PMCON1 register is '1', the write sequence will only load the write latches and will not initiate the write to Flash program memory.
4. Load the PMADRH:PMADRL register pair with the address of the location to be written.
5. Load the PMDATH:PMDATL register pair with the program memory data to be written.
6. Execute the unlock sequence (**Section 10.2.2 "Flash Memory Unlock Sequence"**). The write latch is now loaded.
7. Increment the PMADRH:PMADRL register pair to point to the next location.
8. Repeat steps 5 through 7 until all but the last write latch has been loaded.
9. Clear the LWLO bit of the PMCON1 register. When the LWLO bit of the PMCON1 register is '0', the write sequence will initiate the write to Flash program memory.
10. Load the PMDATH:PMDATL register pair with the program memory data to be written.
11. Execute the unlock sequence (**Section 10.2.2 "Flash Memory Unlock Sequence"**). The entire program memory latch content is now written to Flash program memory.

| | |
|---|---|
| **Note:** | The program memory write latches are reset to the blank state (0x3FFF) at the completion of every write or erase operation. As a result, it is not necessary to load all the program memory write latches. Unloaded latches will remain in the blank state. |

An example of the complete write sequence is shown in Example 10-3. The initial address is loaded into the PMADRH:PMADRL register pair; the data is loaded using indirect addressing.

chanhvinh.com



**FIGURE 10-5: BLOCK WRITES TO FLASH PROGRAM MEMORY WITH 32 WRITE LATCHES**

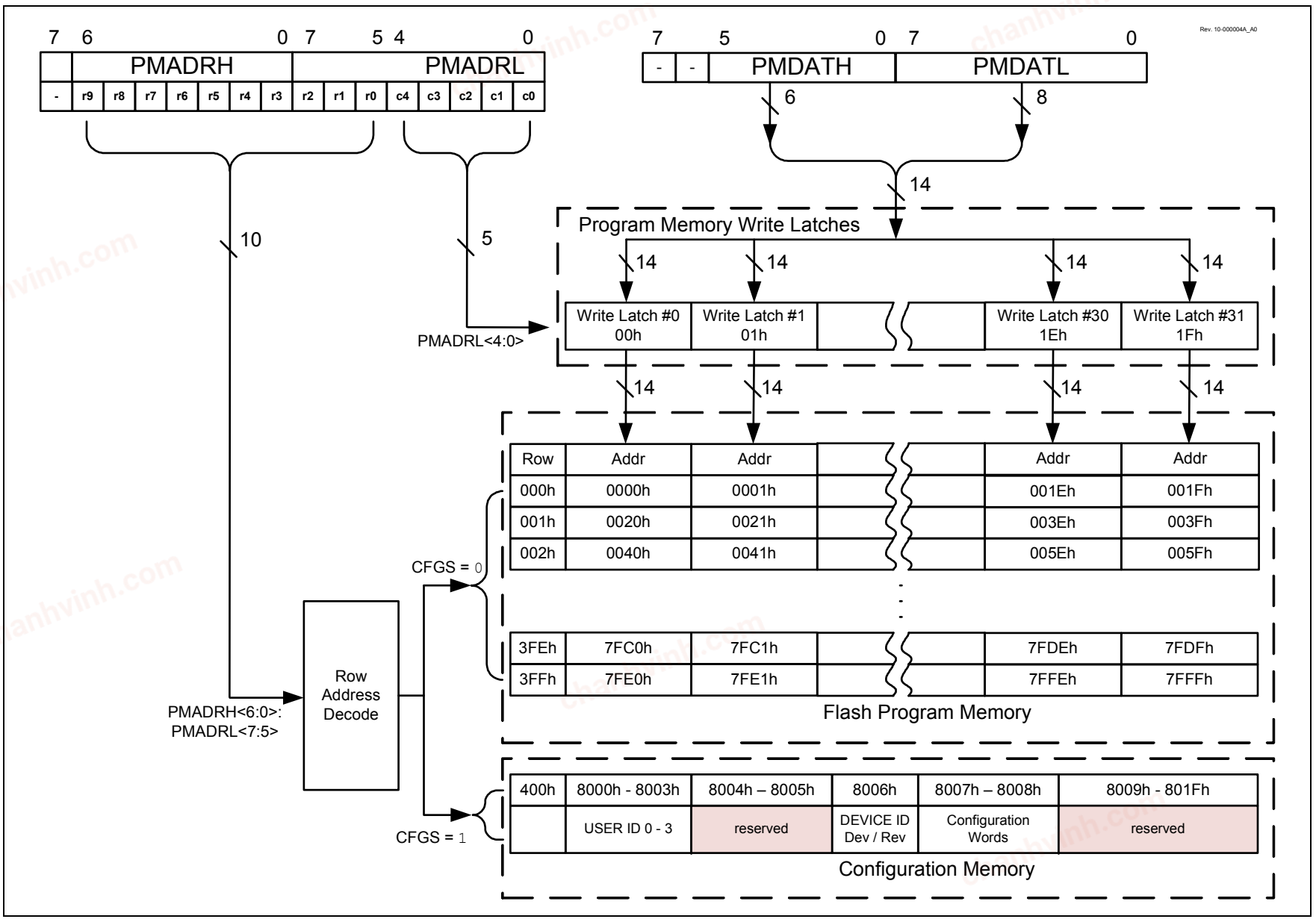




Preliminary

© 2013 Microchip Technology Inc.

chanhvinh.com



**FIGURE 10-6: FLASH PROGRAM MEMORY WRITE FLOWCHART**

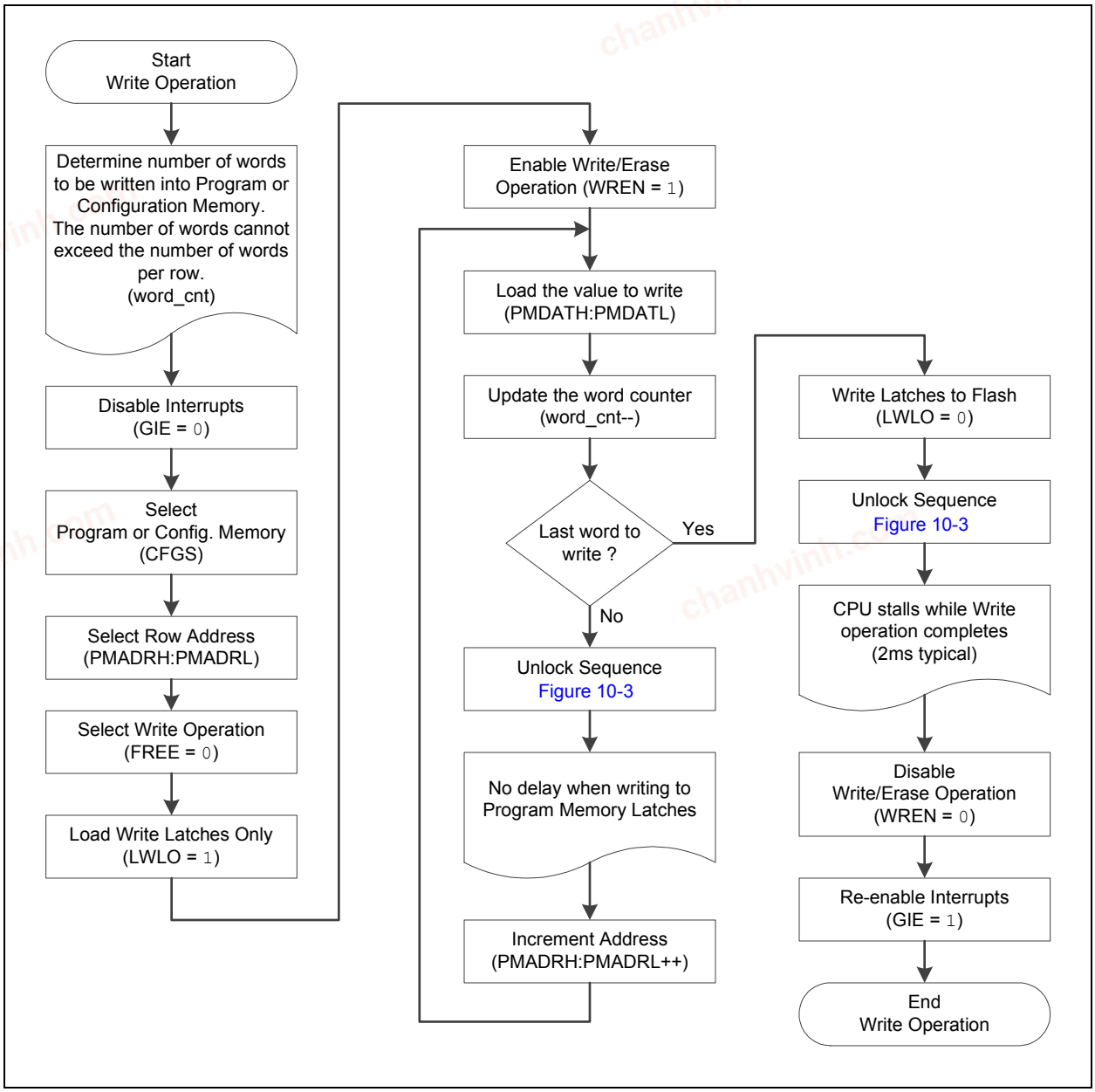

chanhvinh.com



**EXAMPLE 10-3: WRITING TO FLASH PROGRAM MEMORY**

```
; This write routine assumes the following:
; 1. 64 bytes of data are loaded, starting at the address in DATA_ADDR
; 2. Each word of data to be written is made up of two adjacent bytes in DATA_ADDR,
; stored in little endian format
; 3. A valid starting address (the least significant bits = 00000) is loaded in ADDRH:ADDRL
; 4. ADDRH and ADDRL are located in shared data memory 0x70 - 0x7F (common RAM)
;
        BCF     INTCON,GIE      ; Disable ints so required sequences will execute properly
        BANKSEL PMADRH          ; Bank 3
        MOVF    ADDRH,W         ; Load initial address
        MOVWF   PMADRH          ;
        MOVF    ADDRL,W         ;
        MOVWF   PMADRL          ;
        MOVLW   LOW DATA_ADDR   ; Load initial data address
        MOVWF   FSR0L           ;
        MOVLW   HIGH DATA_ADDR  ; Load initial data address
        MOVWF   FSR0H           ;
        BCF     PMCON1,CFGS     ; Not configuration space
        BSF     PMCON1,WREN     ; Enable writes
        BSF     PMCON1,LWLO     ; Only Load Write Latches
LOOP
        MOVIW   FSR0++          ; Load first data byte into lower
        MOVWF   PMDATL          ;
        MOVIW   FSR0++          ; Load second data byte into upper
        MOVWF   PMDATH          ;

        MOVF    PMADRL,W        ; Check if lower bits of address are '00000'
        XORLW   0x1F            ; Check if we're on the last of 32 addresses
        ANDLW   0x1F            ;
        BTFSC   STATUS,Z        ; Exit if last of 32 words,
        GOTO    START_WRITE     ;

Required Sequence
        MOVLW   55h             ; Start of required write sequence:
        MOVWF   PMCON2          ; Write 55h
        MOVLW   0AAh            ;
        MOVWF   PMCON2          ; Write AAh
        BSF     PMCON1,WR       ; Set WR bit to begin write
        NOP                     ; NOP instructions are forced as processor
                                ; loads program memory write latches
        NOP                     ;

        INCF    PMADRL,F        ; Still loading latches Increment address
        GOTO    LOOP            ; Write next latches

START_WRITE
        BCF     PMCON1,LWLO     ; No more loading latches - Actually start Flash program
                                ; memory write

Required Sequence
        MOVLW   55h             ; Start of required write sequence:
        MOVWF   PMCON2          ; Write 55h
        MOVLW   0AAh            ;
        MOVWF   PMCON2          ; Write AAh
        BSF     PMCON1,WR       ; Set WR bit to begin write
        NOP                     ; NOP instructions are forced as processor writes
                                ; all the program memory write latches simultaneously
        NOP                     ; to program memory.
                                ; After NOPs, the processor
                                ; stalls until the self-write process in complete
                                ; after write processor continues with 3rd instruction
        BCF     PMCON1,WREN     ; Disable writes
        BSF     INTCON,GIE      ; Enable interrupts
```

 © 2013 Microchip Technology Inc.

chanhvinh.com



## 10.3 Modifying Flash Program Memory

When modifying existing data in a program memory row, and data within that row must be preserved, it must first be read and saved in a RAM image. Program memory is modified using the following steps:

1. Load the starting address of the row to be modified.
2. Read the existing data from the row into a RAM image.
3. Modify the RAM image to contain the new data to be written into program memory.
4. Load the starting address of the row to be rewritten.
5. Erase the program memory row.
6. Load the write latches with data from the RAM image.
7. Initiate a programming operation.

**FIGURE 10-7: FLASH PROGRAM MEMORY MODIFY FLOWCHART**

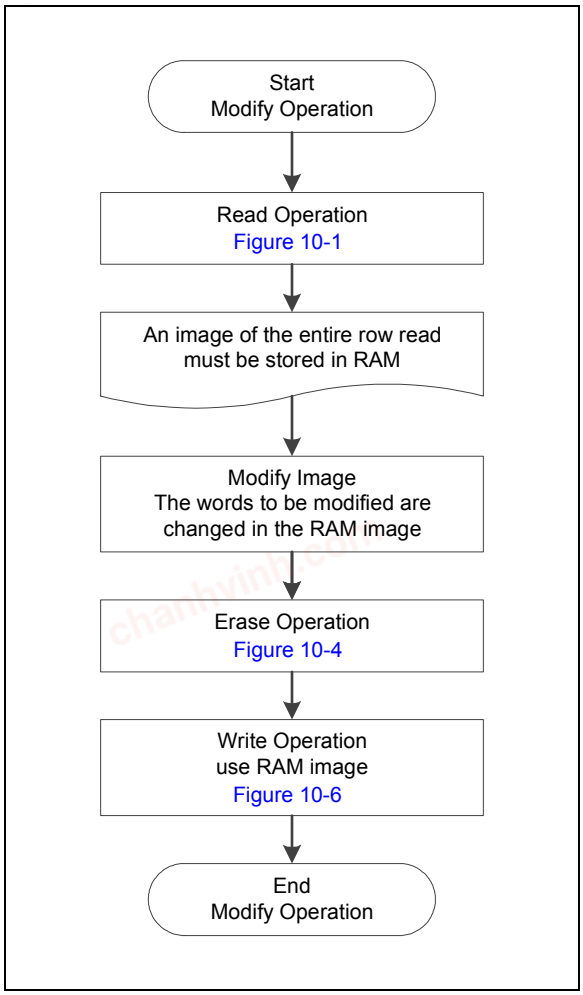

chanhvinh.com



## 10.4 User ID, Device ID and Configuration Word Access

Instead of accessing program memory, the User ID's, Device ID/Revision ID and Configuration Words can be accessed when CFGS = 1 in the PMCON1 register. This is the region that would be pointed to by PC<15> = 1, but not all addresses are accessible. Different access may exist for reads and writes. Refer to Table 10-2.

When read access is initiated on an address outside the parameters listed in Table 10-2, the PMDATH:PMDATL register pair is cleared, reading back '0's.

**TABLE 10-2: USER ID, DEVICE ID AND CONFIGURATION WORD ACCESS (CFGS = 1)**

| Address | Function | Read Access | Write Access |
|---|---|---|---|
| 8000h-8003h | User IDs | Yes | Yes |
| 8005h-8006h | Device ID/Revision ID | Yes | No |
| 8007h-8008h | Configuration Words 1 and 2 | Yes | No |

**EXAMPLE 10-4: CONFIGURATION WORD AND DEVICE ID ACCESS**

```
* This code block will read 1 word of program memory at the memory address:
*   PROG_ADDR_LO (must be 00h-08h) data will be returned in the variables;
*   PROG_DATA_HI, PROG_DATA_LO

    BANKSEL  PMADRL           ; Select correct Bank
    MOVLW    PROG_ADDR_LO     ;
    MOVWF    PMADRL           ; Store LSB of address
    CLRF     PMADRH           ; Clear MSB of address

    BSF      PMCON1,CFGS      ; Select Configuration Space
    BCF      INTCON,GIE       ; Disable interrupts
    BSF      PMCON1,RD        ; Initiate read
    NOP                       ; Executed (See Figure 10-2)
    NOP                       ; Ignored (See Figure 10-2)
    BSF      INTCON,GIE       ; Restore interrupts

    MOVF     PMDATL,W         ; Get LSB of word
    MOVWF    PROG_DATA_LO     ; Store in user location
    MOVF     PMDATH,W         ; Get MSB of word
    MOVWF    PROG_DATA_HI     ; Store in user location
```

 © 2013 Microchip Technology Inc.

chanhvinh.com



## 10.5 Write Verify

It is considered good programming practice to verify that program memory writes agree with the intended value. Since program memory is stored as a full page then the stored program memory contents are compared with the intended data stored in RAM after the last write is complete.

**FIGURE 10-8: FLASH PROGRAM MEMORY VERIFY FLOWCHART**

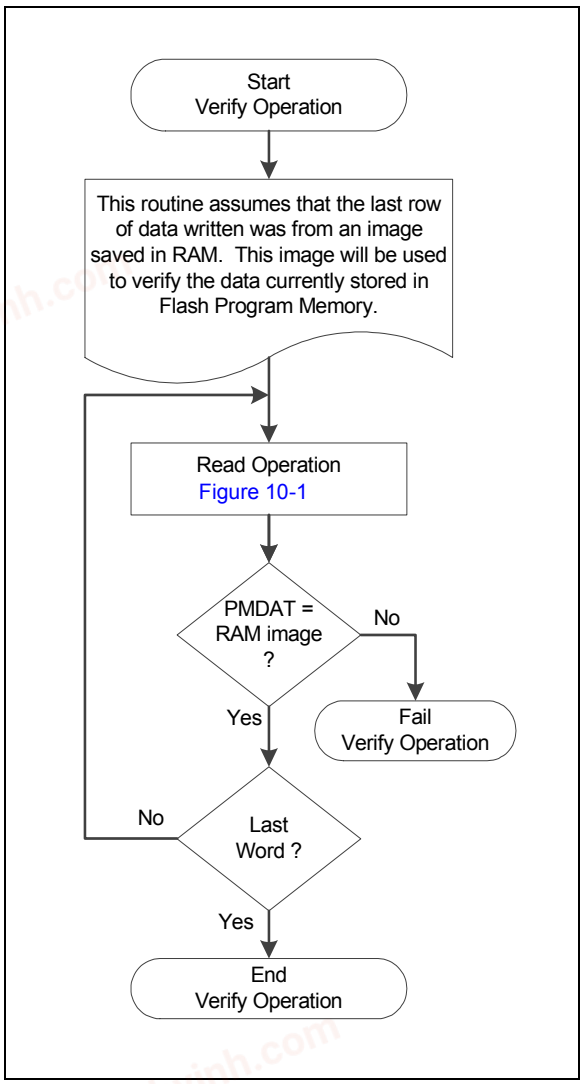

chanhvinh.com



## 10.6 Register Definitions: Flash Program Memory Control

### REGISTER 10-1: PMDATL: PROGRAM MEMORY DATA LOW BYTE REGISTER

| R/W-x/u | R/W-x/u | R/W-x/u | R/W-x/u | R/W-x/u | R/W-x/u | R/W-x/u | R/W-x/u |
|---|---|---|---|---|---|---|---|
| PMDAT<7:0> | | | | | | | |
| bit 7 | | | | | | | bit 0 |

| **Legend:** | | |
|---|---|---|
| R = Readable bit | W = Writable bit | U = Unimplemented bit, read as ‘0’ |
| u = Bit is unchanged | x = Bit is unknown | -n/n = Value at POR and BOR/Value at all other Resets |
| ‘1’ = Bit is set | ‘0’ = Bit is cleared | |

bit 7-0 **PMDAT<7:0>**: Read/write value for Least Significant bits of program memory

### REGISTER 10-2: PMDATH: PROGRAM MEMORY DATA HIGH BYTE REGISTER

| U-0 | U-0 | R/W-x/u | R/W-x/u | R/W-x/u | R/W-x/u | R/W-x/u | R/W-x/u |
|---|---|---|---|---|---|---|---|
| — | — | PMDAT<13:8> | | | | | |
| bit 7 | | | | | | | bit 0 |

| **Legend:** | | |
|---|---|---|
| R = Readable bit | W = Writable bit | U = Unimplemented bit, read as ‘0’ |
| u = Bit is unchanged | x = Bit is unknown | -n/n = Value at POR and BOR/Value at all other Resets |
| ‘1’ = Bit is set | ‘0’ = Bit is cleared | |

bit 7-6 **Unimplemented:** Read as ‘0’

bit 5-0 **PMDAT<13:8>**: Read/write value for Most Significant bits of program memory

### REGISTER 10-3: PMADRL: PROGRAM MEMORY ADDRESS LOW BYTE REGISTER

| R/W-0/0 | R/W-0/0 | R/W-0/0 | R/W-0/0 | R/W-0/0 | R/W-0/0 | R/W-0/0 | R/W-0/0 |
|---|---|---|---|---|---|---|---|
| PMADR<7:0> | | | | | | | |
| bit 7 | | | | | | | bit 0 |

| **Legend:** | | |
|---|---|---|
| R = Readable bit | W = Writable bit | U = Unimplemented bit, read as ‘0’ |
| u = Bit is unchanged | x = Bit is unknown | -n/n = Value at POR and BOR/Value at all other Resets |
| ‘1’ = Bit is set | ‘0’ = Bit is cleared | |

bit 7-0 **PMADR<7:0>**: Specifies the Least Significant bits for program memory address

### REGISTER 10-4: PMADRH: PROGRAM MEMORY ADDRESS HIGH BYTE REGISTER

| U-1 | R/W-0/0 | R/W-0/0 | R/W-0/0 | R/W-0/0 | R/W-0/0 | R/W-0/0 | R/W-0/0 |
|---|---|---|---|---|---|---|---|
| —(1) | PMADR<14:8> | | | | | | |
| bit 7 | | | | | | | bit 0 |

| **Legend:** | | |
|---|---|---|
| R = Readable bit | W = Writable bit | U = Unimplemented bit, read as ‘0’ |
| u = Bit is unchanged | x = Bit is unknown | -n/n = Value at POR and BOR/Value at all other Resets |
| ‘1’ = Bit is set | ‘0’ = Bit is cleared | |

bit 7 **Unimplemented:** Read as ‘1’

bit 6-0 **PMADR<14:8>**: Specifies the Most Significant bits for program memory address

**Note 1:** Unimplemented, read as ‘1’.

 © 2013 Microchip Technology Inc.

chanhvinh.com



**REGISTER 10-5: PMCON1: PROGRAM MEMORY CONTROL 1 REGISTER**

| U-1 | R/W-0/0 | R/W-0/0 | R/W/HC-0/0 | R/W/HC-x/q(2) | R/W-0/0 | R/S/HC-0/0 | R/S/HC-0/0 |
|---|---|---|---|---|---|---|---|
| —(1) | CFGS | LWLO(3) | FREE | WRERR | WREN | WR | RD |
| bit 7 | | | | | | | bit 0 |

| Legend: | | |
|---|---|---|
| R = Readable bit | W = Writable bit | U = Unimplemented bit, read as '0' |
| S = Bit can only be set | x = Bit is unknown | -n/n = Value at POR and BOR/Value at all other Resets |
| '1' = Bit is set | '0' = Bit is cleared | HC = Bit is cleared by hardware |

bit 7 **Unimplemented:** Read as '1'

bit 6 **CFGS:** Configuration Select bit
- 1 = Access Configuration, User ID and Device ID Registers
- 0 = Access Flash program memory

bit 5 **LWLO:** Load Write Latches Only bit(3)
- 1 = Only the addressed program memory write latch is loaded/updated on the next WR command
- 0 = The addressed program memory write latch is loaded/updated and a write of all program memory write latches will be initiated on the next WR command

bit 4 **FREE:** Program Flash Erase Enable bit
- 1 = Performs an erase operation on the next WR command (hardware cleared upon completion)
- 0 = Performs a write operation on the next WR command

bit 3 **WRERR:** Program/Erase Error Flag bit
- 1 = Condition indicates an improper program or erase sequence attempt or termination (bit is set automatically on any set attempt (write '1') of the WR bit).
- 0 = The program or erase operation completed normally

bit 2 **WREN:** Program/Erase Enable bit
- 1 = Allows program/erase cycles
- 0 = Inhibits programming/erasing of program Flash

bit 1 **WR:** Write Control bit
- 1 = Initiates a program Flash program/erase operation.
  The operation is self-timed and the bit is cleared by hardware once operation is complete.
  The WR bit can only be set (not cleared) in software.
- 0 = Program/erase operation to the Flash is complete and inactive

bit 0 **RD:** Read Control bit
- 1 = Initiates a program Flash read. Read takes one cycle. RD is cleared in hardware. The RD bit can only be set (not cleared) in software.
- 0 = Does not initiate a program Flash read

**Note 1:** Unimplemented bit, read as '1'.
**2:** The WRERR bit is automatically set by hardware when a program memory write or erase operation is started (WR = 1).
**3:** The LWLO bit is ignored during a program memory erase operation (FREE = 1).

chanhvinh.com



### REGISTER 10-6: PMCON2: PROGRAM MEMORY CONTROL 2 REGISTER

| W-0/0 | W-0/0 | W-0/0 | W-0/0 | W-0/0 | W-0/0 | W-0/0 | W-0/0 |
|---|---|---|---|---|---|---|---|
| Program Memory Control Register 2 | | | | | | | |
| bit 7 | | | | | | | bit 0 |

| **Legend:** | | |
|---|---|---|
| R = Readable bit | W = Writable bit | U = Unimplemented bit, read as '0' |
| S = Bit can only be set | x = Bit is unknown | -n/n = Value at POR and BOR/Value at all other Resets |
| '1' = Bit is set | '0' = Bit is cleared | |

bit 7-0 **Flash Memory Unlock Pattern bits**

To unlock writes, a 55h must be written first, followed by an AAh, before setting the WR bit of the PMCON1 register. The value written to this register is used to unlock the writes. There are specific timing requirements on these writes.

### TABLE 10-3: SUMMARY OF REGISTERS ASSOCIATED WITH FLASH PROGRAM MEMORY

| Name | Bit 7 | Bit 6 | Bit 5 | Bit 4 | Bit 3 | Bit 2 | Bit 1 | Bit 0 | Register on Page |
|---|---|---|---|---|---|---|---|---|---|
| INTCON | GIE | PEIE | TMR0IE | INTE | IOCIE | TMR0IF | INTF | IOCIF | 86 |
| PMCON1 | —(1) | CFGS | LWLO | FREE | WRERR | WREN | WR | RD | 119 |
| PMCON2 | Program Memory Control Register 2 | | | | | | | | 120 |
| PMADRL | PMADRL<7:0> | | | | | | | | 118 |
| PMADRH | —(1) | PMADRH<6:0> | | | | | | | 118 |
| PMDATL | PMDATL<7:0> | | | | | | | | 118 |
| PMDATH | — | — | PMDATH<5:0> | | | | | | 118 |

**Legend:** — = unimplemented location, read as '0'. Shaded cells are not used by Flash program memory.
**Note 1:** Unimplemented, read as '1'.

### TABLE 10-4: SUMMARY OF CONFIGURATION WORD WITH FLASH PROGRAM MEMORY

| Name | Bits | Bit -/7 | Bit -/6 | Bit 13/5 | Bit 12/4 | Bit 11/3 | Bit 10/2 | Bit 9/1 | Bit 8/0 | Register on Page |
|---|---|---|---|---|---|---|---|---|---|---|
| CONFIG1 | 13:8 | — | — | — | — | $\overline{\text{CLKOUTEN}}$ | BOREN<1:0> | | — | 50 |
| | 7:0 | $\overline{\text{CP}}$ | MCLRE | $\overline{\text{PWRTE}}$ | WDTE<1:0> | | — | FOSC<1:0> | | |
| CONFIG2 | 13:8 | — | — | LVP | $\overline{\text{DEBUG}}$ | $\overline{\text{LPBOR}}$ | BORV | STVREN | PLLEN | 52 |
| | 7:0 | ZCDDIS | — | — | — | — | PPS1WAY | WRT<1:0> | | |

**Legend:** — = unimplemented location, read as '0'. Shaded cells are not used by Flash program memory.

 © 2013 Microchip Technology Inc.

chanhvinh.com



## 11.0 I/O PORTS

Each port has six standard registers for its operation. These registers are:

- TRISx registers (data direction)
- PORTx registers (reads the levels on the pins of the device)
- LATx registers (output latch)
- INLVLx (input level control)
- ODCONx registers (open drain)
- SLRCONx registers (slew rate

Some ports may have one or more of the following additional registers. These registers are:

- ANSELx (analog select)
- WPUx (weak pull-up)

In general, when a peripheral is enabled on a port pin, that pin cannot be used as a general purpose output. However, the pin can still be read.

**TABLE 11-1: PORT AVAILABILITY PER DEVICE**

| Device | PORTA | PORTB | PORTC |
|---|---|---|---|
| PIC16(L)F1704 | • | | • |
| PIC16(L)F1708 | • | • | • |

The Data Latch (LATx registers) is useful for read-modify-write operations on the value that the I/O pins are driving.

A write operation to the LATx register has the same effect as a write to the corresponding PORTx register. A read of the LATx register reads of the values held in the I/O PORT latches, while a read of the PORTx register reads the actual I/O pin value.

Ports that support analog inputs have an associated ANSELx register. When an ANSEL bit is set, the digital input buffer associated with that bit is disabled. Disabling the input buffer prevents analog signal levels on the pin between a logic high and low from causing excessive current in the logic input circuitry. A simplified model of a generic I/O port, without the interfaces to other peripherals, is shown in Figure 11-1.

**FIGURE 11-1: GENERIC I/O PORT OPERATION**

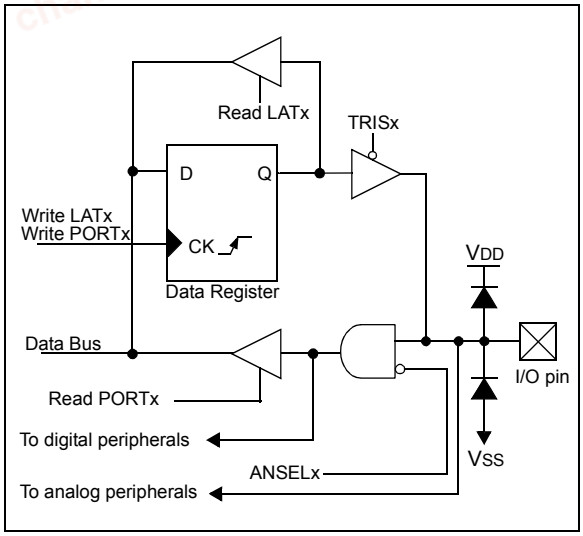

chanhvinh.com



## 11.1 PORTA Registers

### 11.1.1 DATA REGISTER

PORTA is a 6-bit wide, bidirectional port. The corresponding data direction register is TRISA (Register 11-2). Setting a TRISA bit (= 1) will make the corresponding PORTA pin an input (i.e., disable the output driver). Clearing a TRISA bit (= 0) will make the corresponding PORTA pin an output (i.e., enables output driver and puts the contents of the output latch on the selected pin). The exception is RA3, which is input-only and its TRIS bit will always read as '1'. Example 11-1 shows how to initialize PORTA.

Reading the PORTA register (Register 11-1) reads the status of the pins, whereas writing to it will write to the PORT latch. All write operations are read-modify-write operations. Therefore, a write to a port implies that the port pins are read, this value is modified and then written to the PORT data latch (LATA).

### 11.1.2 DIRECTION CONTROL

The TRISA register (Register 11-2) controls the PORTA pin output drivers, even when they are being used as analog inputs. The user should ensure the bits in the TRISA register are maintained set when using them as analog inputs. I/O pins configured as analog inputs always read '0'.

### 11.1.3 OPEN DRAIN CONTROL

The ODCONA register (Register 11-6) controls the open-drain feature of the port. Open drain operation is independently selected for each pin. When an ODCONA bit is set, the corresponding port output becomes an open drain driver capable of sinking current only. When an ODCONA bit is cleared, the corresponding port output pin is the standard push-pull drive capable of sourcing and sinking current.

### 11.1.4 SLEW RATE CONTROL

The SLRCONA register (Register 11-7) controls the slew rate option for each port pin. Slew rate control is independently selectable for each port pin. When an SLRCONA bit is set, the corresponding port pin drive is slew rate limited. When an SLRCONA bit is cleared, The corresponding port pin drive slews at the maximum rate possible.

### 11.1.5 INPUT THRESHOLD CONTROL

The INLVLA register (Register 11-8) controls the input voltage threshold for each of the available PORTA input pins. A selection between the Schmitt Trigger CMOS or the TTL Compatible thresholds is available. The input threshold is important in determining the value of a read of the PORTA register and also the level at which an interrupt-on-change occurs, if that feature is enabled. See Table 32-4: I/O Ports for more information on threshold levels.

| | |
|---|---|
| **Note:** | Changing the input threshold selection should be performed while all peripheral modules are disabled. Changing the threshold level during the time a module is active may inadvertently generate a transition associated with an input pin, regardless of the actual voltage level on that pin. |

### 11.1.6 ANALOG CONTROL

The ANSELA register (Register 11-4) is used to configure the Input mode of an I/O pin to analog. Setting the appropriate ANSELA bit high will cause all digital reads on the pin to be read as '0' and allow analog functions on the pin to operate correctly.

The state of the ANSELA bits has no effect on digital output functions. A pin with TRIS clear and ANSEL set will still operate as a digital output, but the Input mode will be analog. This can cause unexpected behavior when executing read-modify-write instructions on the affected port.

| | |
|---|---|
| **Note:** | The ANSELA bits default to the Analog mode after Reset. To use any pins as digital general purpose or peripheral inputs, the corresponding ANSEL bits must be initialized to '0' by user software. |

**EXAMPLE 11-1: INITIALIZING PORTA**

```
; This code example illustrates
; initializing the PORTA register. The
; other ports are initialized in the same
; manner.

BANKSEL  PORTA        ;
CLRF     PORTA        ;Init PORTA
BANKSEL  LATA         ;Data Latch
CLRF     LATA         ;
BANKSEL  ANSELA       ;
CLRF     ANSELA       ;digital I/O
BANKSEL  TRISA        ;
MOVLW    B'00111000'  ;Set RA<5:3> as inputs
MOVWF    TRISA        ;and set RA<2:0> as
                      ;outputs
```

 © 2013 Microchip Technology Inc.

chanhvinh.com



### 11.1.7 PORTA FUNCTIONS AND OUTPUT PRIORITIES

Each PORTA pin is multiplexed with other functions.

Each pin defaults to the PORT latch data after reset. Other functions are selected with the peripheral pin select logic. See **Section 12.0 "Peripheral Pin Select (PPS) Module"** for more information.

Analog input functions, such as ADC and comparator inputs are not shown in the peripheral pin select lists. These inputs are active when the I/O pin is set for Analog mode using the ANSELA register. Digital output functions may continue to control the pin when it is in Analog mode.

chanhvinh.com



## 11.2 Register Definitions: PORTA

**REGISTER 11-1: PORTA: PORTA REGISTER**

| U-0 | U-0 | R/W-x/x | R/W-x/x | R-x/x | R/W-x/x | R/W-x/x | R/W-x/x |
|---|---|---|---|---|---|---|---|
| — | — | RA5 | RA4 | RA3 | RA2 | RA1 | RA0 |
| bit 7 | | | | | | | bit 0 |

| **Legend:** | | |
|---|---|---|
| R = Readable bit | W = Writable bit | U = Unimplemented bit, read as '0' |
| u = Bit is unchanged | x = Bit is unknown | -n/n = Value at POR and BOR/Value at all other Resets |
| '1' = Bit is set | '0' = Bit is cleared | |

bit 7-6 **Unimplemented:** Read as '0'

bit 5-0 **RA<5:0>**: PORTA I/O Value bits(1)
1 = Port pin is ≥ VIH
0 = Port pin is ≤ VIL

**Note 1:** Writes to PORTA are actually written to corresponding LATA register. Reads from PORTA register is return of actual I/O pin values.

**REGISTER 11-2: TRISA: PORTA TRI-STATE REGISTER**

| U-0 | U-0 | R/W-1/1 | R/W-1/1 | U-1 | R/W-1/1 | R/W-1/1 | R/W-1/1 |
|---|---|---|---|---|---|---|---|
| — | — | TRISA5 | TRISA4 | —(1) | TRISA2 | TRISA1 | TRISA0 |
| bit 7 | | | | | | | bit 0 |

| **Legend:** | | |
|---|---|---|
| R = Readable bit | W = Writable bit | U = Unimplemented bit, read as '0' |
| u = Bit is unchanged | x = Bit is unknown | -n/n = Value at POR and BOR/Value at all other Resets |
| '1' = Bit is set | '0' = Bit is cleared | |

bit 7-6 **Unimplemented:** Read as '0'

bit 5-4 **TRISA<5:4>:** PORTA Tri-State Control bit
1 = PORTA pin configured as an input (tri-stated)
0 = PORTA pin configured as an output

bit 3 **Unimplemented:** Read as '1'

bit 2-0 **TRISA<2:0>:** PORTA Tri-State Control bit
1 = PORTA pin configured as an input (tri-stated)
0 = PORTA pin configured as an output

**Note 1:** Unimplemented, read as '1'.

 © 2013 Microchip Technology Inc.

chanhvinh.com



**REGISTER 11-3: LATA: PORTA DATA LATCH REGISTER**

| U-0 | U-0 | R/W-x/u | R/W-x/u | U-0 | R/W-x/u | R/W-x/u | R/W-x/u |
|---|---|---|---|---|---|---|---|
| — | — | LATA5 | LATA4 | — | LATA2 | LATA1 | LATA0 |
| bit 7 | | | | | | | bit 0 |

| **Legend:** | | |
|---|---|---|
| R = Readable bit | W = Writable bit | U = Unimplemented bit, read as '0' |
| u = Bit is unchanged | x = Bit is unknown | -n/n = Value at POR and BOR/Value at all other Resets |
| '1' = Bit is set | '0' = Bit is cleared | |

bit 7-6 **Unimplemented:** Read as '0'

bit 5-4 **LATA<5:4>**: RA<5:4> Output Latch Value bits(1)

bit 3 **Unimplemented:** Read as '0'

bit 2-0 **LATA<2:0>**: RA<2:0> Output Latch Value bits(1)

**Note 1:** Writes to PORTA are actually written to corresponding LATA register. Reads from PORTA register is return of actual I/O pin values.

**REGISTER 11-4: ANSELA: PORTA ANALOG SELECT REGISTER**

| U-0 | U-0 | U-0 | R/W-1/1 | U-0 | R/W-1/1 | R/W-1/1 | R/W-1/1 |
|---|---|---|---|---|---|---|---|
| — | — | — | ANSA4 | — | ANSA2 | ANSA1 | ANSA0 |
| bit 7 | | | | | | | bit 0 |

| **Legend:** | | |
|---|---|---|
| R = Readable bit | W = Writable bit | U = Unimplemented bit, read as '0' |
| u = Bit is unchanged | x = Bit is unknown | -n/n = Value at POR and BOR/Value at all other Resets |
| '1' = Bit is set | '0' = Bit is cleared | |

bit 7-5 **Unimplemented:** Read as '0'

bit 4 **ANSA4**: Analog Select between Analog or Digital Function on pin RA4
1 = Analog input. Pin is assigned as analog input(1). Digital input buffer disabled.
0 = Digital I/O. Pin is assigned to port or digital special function.

bit 3 **Unimplemented:** Read as '0'

bit 2-0 **ANSA<2:0>**: Analog Select between Analog or Digital Function on pins RA<2:0>, respectively
1 = Analog input. Pin is assigned as analog input(1). Digital input buffer disabled.
0 = Digital I/O. Pin is assigned to port or digital special function.

**Note 1:** When setting a pin to an analog input, the corresponding TRIS bit must be set to Input mode in order to allow external control of the voltage on the pin.

chanhvinh.com



**REGISTER 11-5: WPUA: WEAK PULL-UP PORTA REGISTER**

| U-0 | U-0 | R/W-1/1 | R/W-1/1 | R/W-1/1 | R/W-1/1 | R/W-1/1 | R/W-1/1 |
|---|---|---|---|---|---|---|---|
| — | — | WPUA5 | WPUA4 | WPUA3 | WPUA2 | WPUA1 | WPUA0 |
| bit 7 | | | | | | | bit 0 |

| **Legend:** | | |
|---|---|---|
| R = Readable bit | W = Writable bit | U = Unimplemented bit, read as '0' |
| u = Bit is unchanged | x = Bit is unknown | -n/n = Value at POR and BOR/Value at all other Resets |
| '1' = Bit is set | '0' = Bit is cleared | |

bit 7-6 **Unimplemented:** Read as '0'

bit 5-0 **WPUA<5:0>**: Weak Pull-up Register bits
1 = Pull-up enabled
0 = Pull-up disabled

**Note 1:** Global $\overline{\text{WPUEN}}$ bit of the OPTION_REG register must be cleared for individual pull-ups to be enabled.
**2:** The weak pull-up device is automatically disabled if the pin is configured as an output.

**REGISTER 11-6: ODCONA: PORTA OPEN DRAIN CONTROL REGISTER**

| U-0 | U-0 | R/W-0/0 | R/W-0/0 | U-0 | R/W-0/0 | R/W-0/0 | R/W-0/0 |
|---|---|---|---|---|---|---|---|
| — | — | ODA5 | ODA4 | — | ODA2 | ODA1 | ODA0 |
| bit 7 | | | | | | | bit 0 |

| **Legend:** | | |
|---|---|---|
| R = Readable bit | W = Writable bit | U = Unimplemented bit, read as '0' |
| u = Bit is unchanged | x = Bit is unknown | -n/n = Value at POR and BOR/Value at all other Resets |
| '1' = Bit is set | '0' = Bit is cleared | |

bit 7-6 **Unimplemented:** Read as '0'

bit 5-4 **ODA<5:4>:** PORTA Open Drain Enable bits
For RA<5:4> pins, respectively
1 = Port pin operates as open-drain drive (sink current only)
0 = Port pin operates as standard push-pull drive (source and sink current)

bit 3 **Unimplemented:** Read as '0'

bit 2-0 **ODA<2:0>:** PORTA Open Drain Enable bits
For RA<2:0> pins, respectively
1 = Port pin operates as open-drain drive (sink current only)
0 = Port pin operates as standard push-pull drive (source and sink current)

 © 2013 Microchip Technology Inc.

chanhvinh.com



**REGISTER 11-7: SLRCONA: PORTA SLEW RATE CONTROL REGISTER**

| U-0 | U-0 | R/W-1/1 | R/W-1/1 | U-0 | R/W-1/1 | R/W-1/1 | R/W-1/1 |
|---|---|---|---|---|---|---|---|
| — | — | SLRA5 | SLRA4 | — | SLRA2 | SLRA1 | SLRA0 |
| bit 7 | | | | | | | bit 0 |

| **Legend:** | | |
|---|---|---|
| R = Readable bit | W = Writable bit | U = Unimplemented bit, read as '0' |
| u = Bit is unchanged | x = Bit is unknown | -n/n = Value at POR and BOR/Value at all other Resets |
| '1' = Bit is set | '0' = Bit is cleared | |

bit 7-6 **Unimplemented:** Read as '0'

bit 5-4 **SLRA<5:4>:** PORTA Slew Rate Enable bits
For RA<5:4> pins, respectively
1 = Port pin slew rate is limited
0 = Port pin slews at maximum rate

bit 3 **Unimplemented:** Read as '0'

bit 2-0 **SLRA<2:0>:** PORTA Slew Rate Enable bits
For RA<2:0> pins, respectively
1 = Port pin slew rate is limited
0 = Port pin slews at maximum rate

**REGISTER 11-8: INLVLA: PORTA INPUT LEVEL CONTROL REGISTER**

| U-0 | U-0 | R/W-0/0 | R/W-0/0 | R/W-0/0 | R/W-0/0 | R/W-0/0 | R/W-0/0 |
|---|---|---|---|---|---|---|---|
| — | — | INLVLA5 | INLVLA4 | INLVLA3 | INLVLA2 | INLVLA1 | INLVLA0 |
| bit 7 | | | | | | | bit 0 |

| **Legend:** | | |
|---|---|---|
| R = Readable bit | W = Writable bit | U = Unimplemented bit, read as '0' |
| u = Bit is unchanged | x = Bit is unknown | -n/n = Value at POR and BOR/Value at all other Resets |
| '1' = Bit is set | '0' = Bit is cleared | |

bit 7-6 **Unimplemented:** Read as '0'

bit 5-0 **INLVLA<5:0>:** PORTA Input Level Select bits
For RA<5:0> pins, respectively
1 = ST input used for PORT reads and interrupt-on-change
0 = TTL input used for PORT reads and interrupt-on-change

chanhvinh.com



**TABLE 11-2: SUMMARY OF REGISTERS ASSOCIATED WITH PORTA**

| Name | Bit 7 | Bit 6 | Bit 5 | Bit 4 | Bit 3 | Bit 2 | Bit 1 | Bit 0 | Register on Page |
|---|---|---|---|---|---|---|---|---|---|
| ANSELA | — | — | — | ANSA4 | — | ANSA2 | ANSA1 | ANSA0 | 125 |
| INLVLA | — | — | INLVLA5 | INLVLA4 | INLVLA3 | INLVLA2 | INLVLA1 | INLVLA0 | 127 |
| LATA | — | — | LATA5 | LATA4 | — | LATA2 | LATA1 | LATA0 | 125 |
| ODCONA | — | — | ODA5 | ODA4 | — | ODA2 | ODA1 | ODA0 | 126 |
| OPTION_REG | WPUEN | INTEDG | TMR0CS | TMR0SE | PSA | PS<2:0> | | | 251 |
| PORTA | — | — | RA5 | RA4 | RA3 | RA2 | RA1 | RA0 | 124 |
| SLRCONA | — | — | SLRA5 | SLRA4 | — | SLRA2 | SLRA1 | SLRA0 | 127 |
| TRISA | — | — | TRISA5 | TRISA4 | —(1) | TRISA2 | TRISA1 | TRISA0 | 124 |
| WPUA | — | — | WPUA5 | WPUA4 | WPUA3 | WPUA2 | WPUA1 | WPUA0 | 126 |

**Legend:** x = unknown, u = unchanged, – = unimplemented locations read as '0'. Shaded cells are not used by PORTA.
**Note 1:** Unimplemented, read as '1'.

**TABLE 11-3: SUMMARY OF CONFIGURATION WORD WITH PORTA**

| Name | Bits | Bit -/7 | Bit -/6 | Bit 13/5 | Bit 12/4 | Bit 11/3 | Bit 10/2 | Bit 9/1 | Bit 8/0 | Register on Page |
|---|---|---|---|---|---|---|---|---|---|---|
| CONFIG1 | 13:8 | — | — | FCMEN | IESO | $\overline{\text{CLKOUTEN}}$ | BOREN<1:0> | | — | 50 |
| | 7:0 | $\overline{\text{CP}}$ | MCLRE | $\overline{\text{PWRTE}}$ | WDTE<1:0> | | FOSC<2:0> | | | |

**Legend:** — = unimplemented location, read as '0'. Shaded cells are not used by PORTA.

 © 2013 Microchip Technology Inc.

chanhvinh.com



## 11.3 PORTB Registers (PIC16(L)F1708 only)

PORTB is a 4-bit wide, bidirectional port. The corresponding data direction register is TRISB (Register 11-10). Setting a TRISB bit (= 1) will make the corresponding PORTB pin an input (i.e., put the corresponding output driver in a High-Impedance mode). Clearing a TRISB bit (= 0) will make the corresponding PORTB pin an output (i.e., enable the output driver and put the contents of the output latch on the selected pin). Example 11-1 shows how to initialize an I/O port.

Reading the PORTB register (Register 11-9) reads the status of the pins, whereas writing to it will write to the PORT latch. All write operations are read-modify-write operations. Therefore, a write to a port implies that the port pins are read, this value is modified and then written to the PORT data latch (LATB).

### 11.3.1 DIRECTION CONTROL

The TRISB register (Register 11-10) controls the PORTB pin output drivers, even when they are being used as analog inputs. The user should ensure the bits in the TRISB register are maintained set when using them as analog inputs. I/O pins configured as analog inputs always read '0'.

### 11.3.2 OPEN DRAIN CONTROL

The ODCONB register (Register 11-14) controls the open-drain feature of the port. Open drain operation is independently selected for each pin. When an ODCONB bit is set, the corresponding port output becomes an open drain driver capable of sinking current only. When an ODCONB bit is cleared, the corresponding port output pin is the standard push-pull drive capable of sourcing and sinking current.

### 11.3.3 SLEW RATE CONTROL

The SLRCONB register (Register 11-15) controls the slew rate option for each port pin. Slew rate control is independently selectable for each port pin. When an SLRCONB bit is set, the corresponding port pin drive is slew rate limited. When an SLRCONB bit is cleared, The corresponding port pin drive slews at the maximum rate possible.

### 11.3.4 INPUT THRESHOLD CONTROL

The INLVLB register (Register 11-16) controls the input voltage threshold for each of the available PORTB input pins. A selection between the Schmitt Trigger CMOS or the TTL Compatible thresholds is available. The input threshold is important in determining the value of a read of the PORTB register and also the level at which an interrupt-on-change occurs, if that feature is enabled. See Table 32-4: I/O Ports for more information on threshold levels.

| | |
|---|---|
| **Note:** | Changing the input threshold selection should be performed while all peripheral modules are disabled. Changing the threshold level during the time a module is active may inadvertently generate a transition associated with an input pin, regardless of the actual voltage level on that pin. |

### 11.3.5 ANALOG CONTROL

The ANSELB register (Register 11-12) is used to configure the Input mode of an I/O pin to analog. Setting the appropriate ANSELB bit high will cause all digital reads on the pin to be read as '0' and allow analog functions on the pin to operate correctly.

The state of the ANSELB bits has no effect on digital output functions. A pin with TRIS clear and ANSELB set will still operate as a digital output, but the Input mode will be analog. This can cause unexpected behavior when executing read-modify-write instructions on the affected port.

| | |
|---|---|
| **Note:** | The ANSELB bits default to the Analog mode after Reset. To use any pins as digital general purpose or peripheral inputs, the corresponding ANSEL bits must be initialized to '0' by user software. |

### 11.3.6 PORTB FUNCTIONS AND OUTPUT PRIORITIES

Each pin defaults to the PORT latch data after reset. Other functions are selected with the peripheral pin select logic. See **Section 12.0 "Peripheral Pin Select (PPS) Module"** for more information. Analog input functions, such as ADC and Op Amp inputs, are not shown in the peripheral pin select lists. These inputs are active when the I/O pin is set for Analog mode using the ANSELB register. Digital output functions continue to may continue to control the pin when it is in Analog mode.

chanhvinh.com



## 11.4 Register Definitions: PORTB

### REGISTER 11-9: PORTB: PORTB REGISTER

| R/W-x/u | R/W-x/u | R/W-x/u | R/W-x/u | U-0 | U-0 | U-0 | U-0 |
|---|---|---|---|---|---|---|---|
| RB7 | RB6 | RB5 | RB4 | — | — | — | — |
| bit 7 | | | | | | | bit 0 |

| Legend: | | |
|---|---|---|
| R = Readable bit | W = Writable bit | U = Unimplemented bit, read as '0' |
| u = Bit is unchanged | x = Bit is unknown | -n/n = Value at POR and BOR/Value at all other Resets |
| '1' = Bit is set | '0' = Bit is cleared | |

bit 7-4 **RB<7:4>**: PORTB General Purpose I/O Pin bits(1)
1 = Port pin is ≥ VIH
0 = Port pin is ≤ VIL

bit 3-0 **Unimplemented:** Read as '0'

**Note 1:** Writes to PORTB are actually written to corresponding LATB register. Reads from PORTB register is return of actual I/O pin values.

### REGISTER 11-10: TRISB: PORTB TRI-STATE REGISTER

| R/W-1/1 | R/W-1/1 | R/W-1/1 | R/W-1/1 | U-0 | U-0 | U-0 | U-0 |
|---|---|---|---|---|---|---|---|
| TRISB7 | TRISB6 | TRISB5 | TRISB4 | — | — | — | — |
| bit 7 | | | | | | | bit 0 |

| Legend: | | |
|---|---|---|
| R = Readable bit | W = Writable bit | U = Unimplemented bit, read as '0' |
| u = Bit is unchanged | x = Bit is unknown | -n/n = Value at POR and BOR/Value at all other Resets |
| '1' = Bit is set | '0' = Bit is cleared | |

bit 7-4 **TRISB<7:4>:** PORTB Tri-State Control bits
1 = PORTB pin configured as an input (tri-stated)
0 = PORTB pin configured as an output

bit 3-0 **Unimplemented:** Read as '0'

### REGISTER 11-11: LATB: PORTB DATA LATCH REGISTER

| R/W-x/u | R/W-x/u | R/W-x/u | R/W-x/u | U-0 | U-0 | U-0 | U-0 |
|---|---|---|---|---|---|---|---|
| LATB7 | LATB6 | LATB5 | LATB4 | — | — | — | — |
| bit 7 | | | | | | | bit 0 |

| Legend: | | |
|---|---|---|
| R = Readable bit | W = Writable bit | U = Unimplemented bit, read as '0' |
| u = Bit is unchanged | x = Bit is unknown | -n/n = Value at POR and BOR/Value at all other Resets |
| '1' = Bit is set | '0' = Bit is cleared | |

bit 7-4 **LATB<7:4>**: PORTB Output Latch Value bits(1)

bit 3-0 **Unimplemented:** Read as '0'

**Note 1:** Writes to PORTB are actually written to corresponding LATB register. Reads from PORTB register is return of actual I/O pin values.

 © 2013 Microchip Technology Inc.

chanhvinh.com



**REGISTER 11-12: ANSELB: PORTB ANALOG SELECT REGISTER**

| U-0 | U-0 | R/W-1/1 | R/W-1/1 | U-0 | U-0 | U-0 | U-0 |
|---|---|---|---|---|---|---|---|
| — | — | ANSB5 | ANSB4 | — | — | — | — |
| bit 7 | | | | | | | bit 0 |

| **Legend:** | | |
|---|---|---|
| R = Readable bit | W = Writable bit | U = Unimplemented bit, read as '0' |
| u = Bit is unchanged | x = Bit is unknown | -n/n = Value at POR and BOR/Value at all other Resets |
| '1' = Bit is set | '0' = Bit is cleared | |

bit 7-6 **Unimplemented:** Read as '0'

bit 5-4 **ANSB<5:4>**: Analog Select between Analog or Digital Function on pins RB<5:4>, respectively
0 = Digital I/O. Pin is assigned to port or digital special function.
1 = Analog input. Pin is assigned as analog input(1). Digital input buffer disabled.

bit 3-0 **Unimplemented:** Read as '0'

**Note 1:** When setting a pin to an analog input, the corresponding TRIS bit must be set to Input mode in order to allow external control of the voltage on the pin.

**REGISTER 11-13: WPUB: WEAK PULL-UP PORTB REGISTER**

| R/W-1/1 | R/W-1/1 | R/W-1/1 | R/W-1/1 | U-0 | U-0 | U-0 | U-0 |
|---|---|---|---|---|---|---|---|
| WPUB7 | WPUB6 | WPUB5 | WPUB4 | — | — | — | — |
| bit 7 | | | | | | | bit 0 |

| **Legend:** | | |
|---|---|---|
| R = Readable bit | W = Writable bit | U = Unimplemented bit, read as '0' |
| u = Bit is unchanged | x = Bit is unknown | -n/n = Value at POR and BOR/Value at all other Resets |
| '1' = Bit is set | '0' = Bit is cleared | |

bit 7-4 **WPUB<7:4>**: Weak Pull-up Register bits
1 = Pull-up enabled
0 = Pull-up disabled

bit 3-0 **Unimplemented:** Read as '0'

**Note 1:** Global $\overline{\text{WPUEN}}$ bit of the OPTION_REG register must be cleared for individual pull-ups to be enabled.
**2:** The weak pull-up device is automatically disabled if the pin is configured as an output.

chanhvinh.com



**REGISTER 11-14: ODCONB: PORTB OPEN DRAIN CONTROL REGISTER**

| R/W-0/0 | R/W-0/0 | R/W-0/0 | R/W-0/0 | U-0 | U-0 | U-0 | U-0 |
|---|---|---|---|---|---|---|---|
| ODB7 | ODB6 | ODB5 | ODB4 | — | — | — | — |
| bit 7 | | | | | | | bit 0 |

| **Legend:** | | |
|---|---|---|
| R = Readable bit | W = Writable bit | U = Unimplemented bit, read as '0' |
| u = Bit is unchanged | x = Bit is unknown | -n/n = Value at POR and BOR/Value at all other Resets |
| '1' = Bit is set | '0' = Bit is cleared | |

bit 7-4 **ODB<7:4>:** PORTB Open Drain Enable bits
For RB<7:4> pins, respectively
1 = Port pin operates as open-drain drive (sink current only)
0 = Port pin operates as standard push-pull drive (source and sink current)

bit 3-0 **Unimplemented:** Read as '0'

**REGISTER 11-15: SLRCONB: PORTB SLEW RATE CONTROL REGISTER**

| R/W-1/1 | R/W-1/1 | R/W-1/1 | R/W-1/1 | U-0 | U-0 | U-0 | U-0 |
|---|---|---|---|---|---|---|---|
| SLRB7 | SLRB6 | SLRB5 | SLRB4 | — | — | — | — |
| bit 7 | | | | | | | bit 0 |

| **Legend:** | | |
|---|---|---|
| R = Readable bit | W = Writable bit | U = Unimplemented bit, read as '0' |
| u = Bit is unchanged | x = Bit is unknown | -n/n = Value at POR and BOR/Value at all other Resets |
| '1' = Bit is set | '0' = Bit is cleared | |

bit 7-4 **SLRB<7:4>:** PORTB Slew Rate Enable bits
For RB<7:4> pins, respectively
1 = Port pin slew rate is limited
0 = Port pin slews at maximum rate

bit 3-0 **Unimplemented:** Read as '0'

**REGISTER 11-16: INLVLB: PORTB INPUT LEVEL CONTROL REGISTER**

| R/W-0/0 | R/W-0/0 | R/W-0/0 | R/W-0/0 | U-0 | U-0 | U-0 | U-0 |
|---|---|---|---|---|---|---|---|
| INLVLB7 | INLVLB6 | INLVLB5 | INLVLB4 | — | — | — | — |
| bit 7 | | | | | | | bit 0 |

| **Legend:** | | |
|---|---|---|
| R = Readable bit | W = Writable bit | U = Unimplemented bit, read as '0' |
| u = Bit is unchanged | x = Bit is unknown | -n/n = Value at POR and BOR/Value at all other Resets |
| '1' = Bit is set | '0' = Bit is cleared | |

bit 7-4 **INLVLB<7:4>:** PORTB Input Level Select bits
For RB<7:4> pins, respectively
1 = ST input used for PORT reads and interrupt-on-change
0 = TTL input used for PORT reads and interrupt-on-change

bit 3-0 **Unimplemented:** Read as '0'

 © 2013 Microchip Technology Inc.

chanhvinh.com



**TABLE 11-4: SUMMARY OF REGISTERS ASSOCIATED WITH PORTB**

| Name | Bit 7 | Bit 6 | Bit 5 | Bit 4 | Bit 3 | Bit 2 | Bit 1 | Bit 0 | Register on Page |
|---|---|---|---|---|---|---|---|---|---|
| ANSELB | — | — | ANSB5 | ANSB4 | — | — | — | — | 131 |
| INLVLB | INLVLB7 | INLVLB6 | INLVLB5 | INLVLB4 | — | — | — | — | 132 |
| LATB | LATB7 | LATB6 | LATB5 | LATB4 | — | — | — | — | 130 |
| ODCONB | ODB7 | ODB6 | ODB5 | ODB4 | — | — | — | — | 132 |
| PORTB | RB7 | RB6 | RB5 | RB4 | — | — | — | — | 130 |
| SLRCONB | SLRB7 | SLRB6 | SLRB5 | SLRB4 | — | — | — | — | 132 |
| TRISB | TRISB7 | TRISB6 | TRISB5 | TRISB4 | — | — | — | — | 132 |
| WPUB | WPUB7 | WPUB6 | WPUB5 | WPUB4 | — | — | — | — | 131 |

**Legend:** x = unknown, u = unchanged, - = unimplemented locations read as '0'. Shaded cells are not used by PORTB.

chanhvinh.com



## 11.5 PORTC Registers

### 11.5.1 DATA REGISTER

PORTC is a 6-bit wide bidirectional port in the PIC16(L)F1704 device and 8-bit wide bidirectional port in the PIC16(L)F1708 device. The corresponding data direction register is TRISC (Register 11-18). Setting a TRISC bit (= 1) will make the corresponding PORTC pin an input (i.e., put the corresponding output driver in a High-Impedance mode). Clearing a TRISC bit (= 0) will make the corresponding PORTC pin an output (i.e., enable the output driver and put the contents of the output latch on the selected pin). Example 11-1 shows how to initialize an I/O port.

Reading the PORTC register (Register 11-17) reads the status of the pins, whereas writing to it will write to the PORT latch. All write operations are read-modify-write operations. Therefore, a write to a port implies that the port pins are read, this value is modified and then written to the PORT data latch (LATC).

### 11.5.2 DIRECTION CONTROL

The TRISC register (Register 11-18) controls the PORTC pin output drivers, even when they are being used as analog inputs. The user should ensure the bits in the TRISC register are maintained set when using them as analog inputs. I/O pins configured as analog inputs always read '0'.

### 11.5.3 INPUT THRESHOLD CONTROL

The INLVLC register (Register 11-24) controls the input voltage threshold for each of the available PORTC input pins. A selection between the Schmitt Trigger CMOS or the TTL Compatible thresholds is available. The input threshold is important in determining the value of a read of the PORTC register and also the level at which an interrupt-on-change occurs, if that feature is enabled. See Table 32-4: I/O Ports for more information on threshold levels.

| | |
|---|---|
| **Note:** | Changing the input threshold selection should be performed while all peripheral modules are disabled. Changing the threshold level during the time a module is active may inadvertently generate a transition associated with an input pin, regardless of the actual voltage level on that pin. |

### 11.5.4 OPEN DRAIN CONTROL

The ODCONC register (Register 11-22) controls the open-drain feature of the port. Open drain operation is independently selected for each pin. When an ODCONC bit is set, the corresponding port output becomes an open drain driver capable of sinking current only. When an ODCONC bit is cleared, the corresponding port output pin is the standard push-pull drive capable of sourcing and sinking current.

### 11.5.5 SLEW RATE CONTROL

The SLRCONC register (Register 11-23) controls the slew rate option for each port pin. Slew rate control is independently selectable for each port pin. When an SLRCONC bit is set, the corresponding port pin drive is slew rate limited. When an SLRCONC bit is cleared, The corresponding port pin drive slews at the maximum rate possible.

### 11.5.6 ANALOG CONTROL

The ANSELC register (Register 11-20) is used to configure the Input mode of an I/O pin to analog. Setting the appropriate ANSELC bit high will cause all digital reads on the pin to be read as '0' and allow analog functions on the pin to operate correctly.

The state of the ANSELC bits has no effect on digital output functions. A pin with TRIS clear and ANSELC set will still operate as a digital output, but the Input mode will be analog. This can cause unexpected behavior when executing read-modify-write instructions on the affected port.

| | |
|---|---|
| **Note:** | The ANSELC bits default to the Analog mode after Reset. To use any pins as digital general purpose or peripheral inputs, the corresponding ANSEL bits must be initialized to '0' by user software. |

### 11.5.7 PORTC FUNCTIONS AND OUTPUT PRIORITIES

Each pin defaults to the PORT latch data after reset. Other functions are selected with the peripheral pin select logic. See **Section 12.0 "Peripheral Pin Select (PPS) Module"** for more information.

Analog input functions, such as ADC and comparator inputs, are not shown in the peripheral pin select lists. These inputs are active when the I/O pin is set for Analog mode using the ANSELC register. Digital output functions may continue to control the pin when it is in Analog mode.

 © 2013 Microchip Technology Inc.

chanhvinh.com



## 11.6 Register Definitions: PORTC

### REGISTER 11-17: PORTC: PORTC REGISTER

| R/W-x/u | R/W-x/u | R/W-x/u | R/W-x/u | R/W-x/u | R/W-x/u | R/W-x/u | R/W-x/u |
|---|---|---|---|---|---|---|---|
| RC7(2) | RC6(2) | RC5 | RC4 | RC3 | RC2 | RC1 | RC0 |
| bit 7 | | | | | | | bit 0 |

| Legend: | | |
|---|---|---|
| R = Readable bit | W = Writable bit | U = Unimplemented bit, read as '0' |
| u = Bit is unchanged | x = Bit is unknown | -n/n = Value at POR and BOR/Value at all other Resets |
| '1' = Bit is set | '0' = Bit is cleared | |

bit 7-0 **RC<7:0>**: PORTC General Purpose I/O Pin bits(1, 2)
1 = Port pin is ≥ VIH
0 = Port pin is ≤ VIL

**Note 1:** Writes to PORTC are actually written to corresponding LATC register. Reads from PORTC register is return of actual I/O pin values.
**2:** RC<7:6> are available on PIC16(L)F1708 only.

### REGISTER 11-18: TRISC: PORTC TRI-STATE REGISTER

| R/W-1/1 | R/W-1/1 | R/W-1/1 | R/W-1/1 | R/W-1/1 | R/W-1/1 | R/W-1/1 | R/W-1/1 |
|---|---|---|---|---|---|---|---|
| TRISC7(1) | TRISC6(1) | TRISC5 | TRISC4 | TRISC3 | TRISC2 | TRISC1 | TRISC0 |
| bit 7 | | | | | | | bit 0 |

| Legend: | | |
|---|---|---|
| R = Readable bit | W = Writable bit | U = Unimplemented bit, read as '0' |
| u = Bit is unchanged | x = Bit is unknown | -n/n = Value at POR and BOR/Value at all other Resets |
| '1' = Bit is set | '0' = Bit is cleared | |

bit 7-0 **TRISC<7:0>:** PORTC Tri-State Control bits(1)
1 = PORTC pin configured as an input (tri-stated)
0 = PORTC pin configured as an output

**Note 1:** TRISC<7:6> are available on PIC16(L)F1708 only.

### REGISTER 11-19: LATC: PORTC DATA LATCH REGISTER

| R/W-x/u | R/W-x/u | R/W-x/u | R/W-x/u | R/W-x/u | R/W-x/u | R/W-x/u | R/W-x/u |
|---|---|---|---|---|---|---|---|
| LATC7(1) | LATC6(1) | LATC5 | LATC4 | LATC3 | LATC2 | LATC1 | LATC0 |
| bit 7 | | | | | | | bit 0 |

| Legend: | | |
|---|---|---|
| R = Readable bit | W = Writable bit | U = Unimplemented bit, read as '0' |
| u = Bit is unchanged | x = Bit is unknown | -n/n = Value at POR and BOR/Value at all other Resets |
| '1' = Bit is set | '0' = Bit is cleared | |

bit 7-0 **LATC<7:0>**: PORTC Output Latch Value bits(1)

**Note 1:** LATC<7:6> are available on PIC16(L)F1708 only.

chanhvinh.com



**REGISTER 11-20: ANSELC: PORTC ANALOG SELECT REGISTER**

| R/W-1/1 | R/W-1/1 | U-0 | U-0 | R/W-1/1 | R/W-1/1 | R/W-1/1 | R/W-1/1 |
|---|---|---|---|---|---|---|---|
| ANSC7(2) | ANSC6(2) | ANSC5(3) | ANSC4(3) | ANSC3 | ANSC2 | ANSC1 | ANSC0 |
| bit 7 | | | | | | | bit 0 |

| **Legend:** | | |
|---|---|---|
| R = Readable bit | W = Writable bit | U = Unimplemented bit, read as '0' |
| u = Bit is unchanged | x = Bit is unknown | -n/n = Value at POR and BOR/Value at all other Resets |
| '1' = Bit is set | '0' = Bit is cleared | |

bit 7-0 **ANSC<7:0>**: Analog Select between Analog or Digital Function on pins RC<7:0>, respectively(1)
0 = Digital I/O. Pin is assigned to port or digital special function.
1 = Analog input. Pin is assigned as analog input(1). Digital input buffer disabled.

**Note 1:** When setting a pin to an analog input, the corresponding TRIS bit must be set to Input mode in order to allow external control of the voltage on the pin.
**2:** ANSC<7:6> are available on PIC16(L)F1708 only.
**3:** ANSC<5:4> are available on PIC16(L)F1704 only.

**REGISTER 11-21: WPUC: WEAK PULL-UP PORTC REGISTER**

| R/W-1/1 | R/W-1/1 | R/W-1/1 | R/W-1/1 | R/W-1/1 | R/W-1/1 | R/W-1/1 | R/W-1/1 |
|---|---|---|---|---|---|---|---|
| WPUC7(3) | WPUC6(3) | WPUC5 | WPUC4 | WPUC3 | WPUC2 | WPUC1 | WPUC0 |
| bit 7 | | | | | | | bit 0 |

| **Legend:** | | |
|---|---|---|
| R = Readable bit | W = Writable bit | U = Unimplemented bit, read as '0' |
| u = Bit is unchanged | x = Bit is unknown | -n/n = Value at POR and BOR/Value at all other Resets |
| '1' = Bit is set | '0' = Bit is cleared | |

bit 7-0 **WPUC<7:0>**: Weak Pull-up Register bits(3)
1 = Pull-up enabled
0 = Pull-up disabled

**Note 1:** Global $\overline{\text{WPUEN}}$ bit of the OPTION_REG register must be cleared for individual pull-ups to be enabled.
**2:** The weak pull-up device is automatically disabled if the pin is configured as an output.
**3:** WPUC<7:6> are available on PIC16(L)F1708 only.

 © 2013 Microchip Technology Inc.

chanhvinh.com



### REGISTER 11-22: ODCONC: PORTC OPEN DRAIN CONTROL REGISTER

| R/W-0/0 | R/W-0/0 | R/W-0/0 | R/W-0/0 | R/W-0/0 | R/W-0/0 | R/W-0/0 | R/W-0/0 |
|---|---|---|---|---|---|---|---|
| ODC7(1) | ODC6(1) | ODC5 | ODC4 | ODC3 | ODC2 | ODC1 | ODC0 |
| bit 7 | | | | | | | bit 0 |

| Legend: | | |
|---|---|---|
| R = Readable bit | W = Writable bit | U = Unimplemented bit, read as '0' |
| u = Bit is unchanged | x = Bit is unknown | -n/n = Value at POR and BOR/Value at all other Resets |
| '1' = Bit is set | '0' = Bit is cleared | |

bit 7-0 **ODC<7:0>:** PORTC Open Drain Enable bits(1)
For RC<7:0> pins, respectively
1 = Port pin operates as open-drain drive (sink current only)
0 = Port pin operates as standard push-pull drive (source and sink current)

**Note 1:** ODC<7:6> are available on PIC16(L)F1708 only.

### REGISTER 11-23: SLRCONC: PORTC SLEW RATE CONTROL REGISTER

| R/W-1/1 | R/W-1/1 | R/W-1/1 | R/W-1/1 | R/W-1/1 | R/W-1/1 | R/W-1/1 | R/W-1/1 |
|---|---|---|---|---|---|---|---|
| SLRC7(1) | SLRC6(1) | SLRC5 | SLRC4 | SLRC3 | SLRC2 | SLRC1 | SLRC0 |
| bit 7 | | | | | | | bit 0 |

| Legend: | | |
|---|---|---|
| R = Readable bit | W = Writable bit | U = Unimplemented bit, read as '0' |
| u = Bit is unchanged | x = Bit is unknown | -n/n = Value at POR and BOR/Value at all other Resets |
| '1' = Bit is set | '0' = Bit is cleared | |

bit 7-0 **SLRC<7:0>:** PORTC Slew Rate Enable bits(1)
For RC<7:0> pins, respectively
1 = Port pin slew rate is limited
0 = Port pin slews at maximum rate

**Note 1:** SLRC<7:6> are available on PIC16(L)F1708 only.

### REGISTER 11-24: INLVLC: PORTC INPUT LEVEL CONTROL REGISTER

| R/W-1/1 | R/W-1/1 | R/W-1/1 | R/W-1/1 | R/W-1/1 | R/W-1/1 | R/W-1/1 | R/W-1/1 |
|---|---|---|---|---|---|---|---|
| INLVLC7(1) | INLVLC6(1) | INLVLC5 | INLVLC4 | INLVLC3 | INLVLC2 | INLVLC1 | INLVLC0 |
| bit 7 | | | | | | | bit 0 |

| Legend: | | |
|---|---|---|
| R = Readable bit | W = Writable bit | U = Unimplemented bit, read as '0' |
| u = Bit is unchanged | x = Bit is unknown | -n/n = Value at POR and BOR/Value at all other Resets |
| '1' = Bit is set | '0' = Bit is cleared | |

bit 7-0 **INLVLC<7:0>:** PORTC Input Level Select bits(1)
For RC<7:0> pins, respectively
1 = ST input used for PORT reads and interrupt-on-change
0 = TTL input used for PORT reads and interrupt-on-change

**Note 1:** INLVLC<7:6> are available on PIC16(L)F1708 only.

chanhvinh.com



**TABLE 11-5: SUMMARY OF REGISTERS ASSOCIATED WITH PORTC**

| Name | Bit 7 | Bit 6 | Bit 5 | Bit 4 | Bit 3 | Bit 2 | Bit 1 | Bit 0 | Register on Page |
|---|---|---|---|---|---|---|---|---|---|
| ANSELC | ANSC7(1) | ANSC6(1) | ANSC5(2) | ANSC4(2) | ANSC3 | ANSC2 | ANSC1 | ANSC0 | 136 |
| INLVLC | INLVLC7(1) | INLVLC6(1) | INLVLC5 | INLVLC4 | INLVLC3 | INLVLC2 | INLVLC1 | INLVLC0 | 137 |
| LATC | LATC7(1) | LATC6(1) | LATC5 | LATC4 | LATC3 | LATC2 | LATC1 | LATC0 | 135 |
| ODCONC | ODC7(1) | ODC6(1) | ODC5 | ODC4 | ODC3 | ODC2 | ODC1 | ODC0 | 137 |
| PORTC | RC7(1) | RC6(1) | RC5 | RC4 | RC3 | RC2 | RC1 | RC0 | 135 |
| SLRCONC | SLRC7(1) | SLRC6(1) | SLRC5 | SLRC4 | SLRC3 | SLRC2 | SLRC1 | SLRC0 | 137 |
| TRISC | TRISC7(1) | TRISC6(1) | TRISC5 | TRISC4 | TRISC3 | TRISC2 | TRISC1 | TRISC0 | 135 |
| WPUC | WPUC7(1) | WPUC6(1) | WPUC5 | WPUC4 | WPUC3 | WPUC2 | WPUC1 | WPUC0 | 136 |

**Legend:** x = unknown, u = unchanged, - = unimplemented locations read as '0'. Shaded cells are not used by PORTC.

**Note 1:** PIC16(L)F1708 only.

**2:** PIC16(L)F1704 only.

 © 2013 Microchip Technology Inc.

chanhvinh.com



## 12.0 PERIPHERAL PIN SELECT (PPS) MODULE

The Peripheral Pin Select (PPS) module connects peripheral inputs and outputs to the device I/O pins. Only digital signals are included in the selections. All analog inputs and outputs remain fixed to their assigned pins. Input and output selections are independent as shown in the simplified block diagram Figure 12-1.

### 12.1 PPS Inputs

Each peripheral has a PPS register with which the inputs to the peripheral are selected. Inputs include the device pins.

Multiple peripherals can operate from the same source simultaneously. Port reads always return the pin level regardless of peripheral PPS selection. If a pin also has associated analog functions, the ANSEL bit for that pin must be cleared to enable the digital input buffer.

Although every peripheral has its own PPS input selection register, the selections are identical for every peripheral as shown in Register 12-1 for PIC16(L)F1704 devices and Register 12-2 for PIC16(L)F1708 devices.

| | |
|---|---|
| **Note:** | The notation “xxx” in the register name is a place holder for the peripheral identifier. For example, CLC1PPS. |

### 12.2 PPS Outputs

Each I/O pin has a PPS register with which the pin output source is selected. With few exceptions, the port TRIS control associated with that pin retains control over the pin output driver. Peripherals that control the pin output driver as part of the peripheral operation will override the TRIS control as needed. These peripherals include:

- EUSART (synchronous operation)
- MSSP ($I^2C$)
- COG (auto-shutdown)

Although every pin has its own PPS peripheral selection register, the selections are identical for every pin as shown in Register 12-3.

| | |
|---|---|
| **Note:** | The notation “Rxy” is a place holder for the pin identifier. For example, RA0PPS. |

**FIGURE 12-1: SIMPLIFIED PPS BLOCK DIAGRAM**

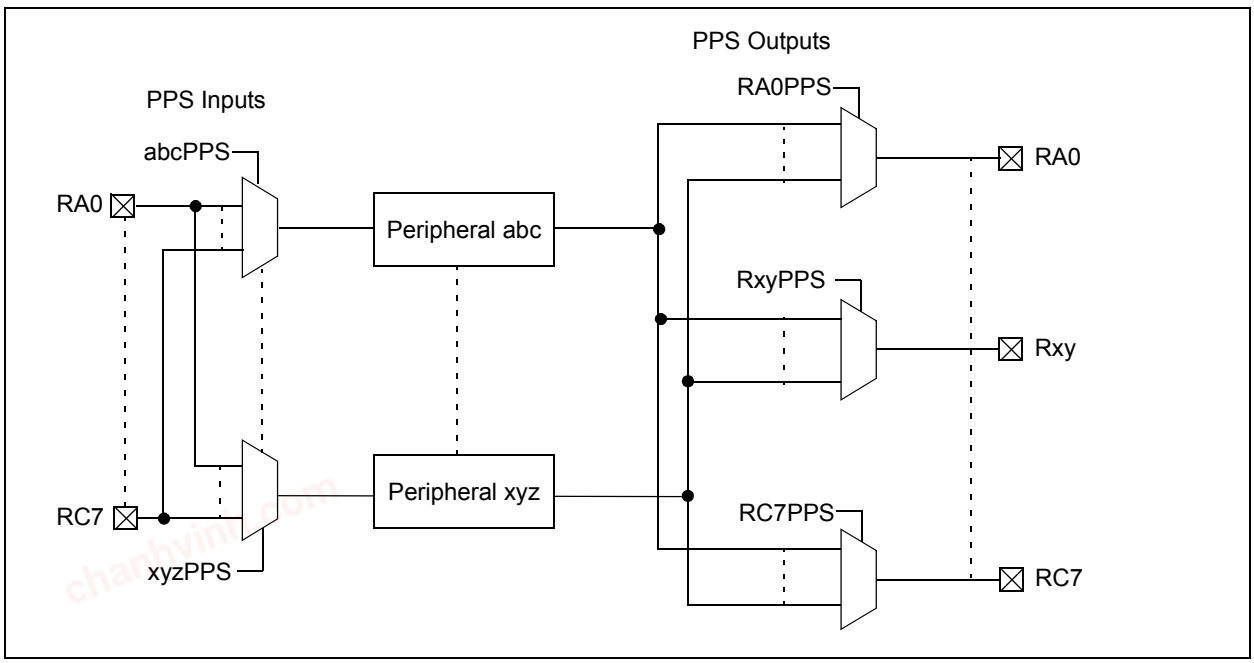

chanhvinh.com



## 12.3 Bidirectional Pins

PPS selections for peripherals with bidirectional signals on a single pin must be made so that the PPS input and PPS output select the same pin. Peripherals that have bidirectional signals include:

- EUSART (synchronous operation)
- MSSP ($I^2C$)

| | |
|---|---|
| **Note:** | The $I^2C$ default input pins are $I^2C$ and SMBus compatible and are the only pins on the device with this compatibility. |

## 12.4 PPS Lock

The PPS includes a mode in which all input and output selections can be locked to prevent inadvertent changes. PPS selections are locked by setting the PPSLOCKED bit of the PPSLOCK register. Setting and clearing this bit requires a special sequence as an extra precaution against inadvertent changes. Examples of setting and clearing the PPSLOCKED bit are shown in Example 12-1.

**EXAMPLE 12-1: PPS LOCK/UNLOCK SEQUENCE**

```
; suspend interrupts
    bcf     INTCON,GIE
;   BANKSEL PPSLOCK     ; set bank
; required sequence, next 5 instructions
    movlw   0x55
    movwf   PPSLOCK
    movlw   0xAA
    movwf   PPSLOCK
; Set PPSLOCKED bit to disable writes or
; Clear PPSLOCKED bit to enable writes
    bsf     PPSLOCK,PPSLOCKED
; restore interrupts
    bsf     INTCON,GIE
```

## 12.5 PPS Permanent Lock

The PPS can be permanently locked by setting the PPS1WAY Configuration bit. When this bit is set, the PPSLOCKED bit can only be cleared and set one time after a device Reset. This allows for clearing the PPSLOCKED bit so that the input and output selections can be made during initialization. When the PPSLOCKED bit is set after all selections have been made, it will remain set and cannot be cleared until after the next device Reset event.

## 12.6 Operation During Sleep

PPS input and output selections are unaffected by Sleep.

## 12.7 Effects of a Reset

A device Power-On-Reset (POR) clears all PPS input and output selections to their default values. All other Resets leave the selections unchanged. Default input selections are shown in pin allocation Table 1 and Table 2.

 © 2013 Microchip Technology Inc.

chanhvinh.com



## 12.8 Register Definitions: PPS Input Selection

**REGISTER 12-1: xxxPPS: PERIPHERAL xxx INPUT SELECTION (PIC16(L)F1704)**

| U-0 | U-0 | U-0 | R/W-q/u | R/W-q/u | R/W-q/u | R/W-q/u | R/W-q/u |
|---|---|---|---|---|---|---|---|
| — | — | — | xxxPPS<4:0> | | | | |
| bit 7 | | | | | | | bit 0 |

| **Legend:** | | |
|---|---|---|
| R = Readable bit | W = Writable bit | U = Unimplemented bit, read as '0' |
| u = Bit is unchanged | x = Bit is unknown | -n/n = Value at POR and BOR/Value at all other Resets |
| '1' = Bit is set | '0' = Bit is cleared | q = value depends on peripheral |

bit 7-5 **Unimplemented:** Read as '0'

bit 4-0 **xxxPPS<4:0>:** Peripheral xxx Input Selection bits

11xxx = Reserved. Do not use.

1011x = Reserved. Do not use.
10101 = Peripheral input is RC5
10100 = Peripheral input is RC4
10011 = Peripheral input is RC3
10010 = Peripheral input is RC2
10001 = Peripheral input is RC1
10000 = Peripheral input is RC0

01xxx = Reserved. Do not use.

0011X = Reserved. Do not use.
00101 = Peripheral input is RA5
00100 = Peripheral input is RA4
00011 = Peripheral input is RA3
00010 = Peripheral input is RA2
00001 = Peripheral input is RA1
00000 = Peripheral input is RA0

chanhvinh.com



**REGISTER 12-2: xxxPPS: PERIPHERAL xxx INPUT SELECTION (PIC16(L)F1708)**

| U-0 | U-0 | U-0 | R/W-q/u | R/W-q/u | R/W-q/u | R/W-q/u | R/W-q/u |
|---|---|---|---|---|---|---|---|
| — | — | — | xxxPPS<4:0> | | | | |
| bit 7 | | | | | | | bit 0 |

| **Legend:** | | |
|---|---|---|
| R = Readable bit | W = Writable bit | U = Unimplemented bit, read as '0' |
| u = Bit is unchanged | x = Bit is unknown | -n/n = Value at POR and BOR/Value at all other Resets |
| '1' = Bit is set | '0' = Bit is cleared | q = value depends on peripheral |

bit 7-5 **Unimplemented:** Read as '0'

bit 4-0 **xxxPPS<4:0>:** Peripheral xxx Input Selection bits

11xxx = Reserved. Do not use.

10111 = Peripheral input is RC7
10110 = Peripheral input is RC6
10101 = Peripheral input is RC5
10100 = Peripheral input is RC4
10011 = Peripheral input is RC3
10010 = Peripheral input is RC2
10001 = Peripheral input is RC1
10000 = Peripheral input is RC0

01111 = Peripheral input is RB7
01110 = Peripheral input is RB6
01101 = Peripheral input is RB5
01100 = Peripheral input is RB4

010xx = Reserved. Do not use.

0011X = Reserved. Do not use.
00101 = Peripheral input is RA5
00100 = Peripheral input is RA4
00011 = Peripheral input is RA3
00010 = Peripheral input is RA2
00001 = Peripheral input is RA1
00000 = Peripheral input is RA0

 © 2013 Microchip Technology Inc.

chanhvinh.com



**REGISTER 12-3: RxyPPS: PIN Rxy OUTPUT SOURCE SELECTION REGISTER**

| U-0 | U-0 | U-0 | R/W-0/u | R/W-0/u | R/W-0/u | R/W-0/u | R/W-0/u |
|---|---|---|---|---|---|---|---|
| — | — | — | RxyPPS<4:0> | | | | |
| bit 7 | | | | | | | bit 0 |

| **Legend:** | | |
|---|---|---|
| R = Readable bit | W = Writable bit | U = Unimplemented bit, read as '0' |
| u = Bit is unchanged | x = Bit is unknown | -n/n = Value at POR and BOR/Value at all other Resets |
| '1' = Bit is set | '0' = Bit is cleared | |

bit 7-5 **Unimplemented:** Read as '0'

bit 4-0 **RxyPPS<4:0>:** Pin Rxy Output Source Selection bits

11xxx = Reserved
10111 = Rxy source is C2OUT
10110 = Rxy source is C1OUT
10101 = Rxy source is DT(1)
10100 = Rxy source is TX/CK(1)
10011 = Reserved
10010 = Rxy source is SDO
10001 = Rxy source is SDA(1)
10000 = Rxy source is SCK/SCL(1)

01111 = Rxy source is PWM4OUT
01110 = Rxy source is PWM3OUT
01101 = Rxy source is CCP2
01100 = Rxy source is CCP1
01011 = Rxy source is COG1D(1)
01010 = Rxy source is COG1C(1)
01001 = Rxy source is COG1B(1)
01000 = Rxy source is COG1A(1)

00111 = Reserved
00110 = Rxy source is LC3OUT
00101 = Rxy source is LC2OUT
00100 = Rxy source is LC1OUT
00011 = Reserved
00010 = Reserved
00001 = Reserved
00000 = Rxy source is LATxy

**Note 1:** TRIS control is overridden by the peripheral as required.

chanhvinh.com



**REGISTER 12-4: PPSLOCK: PPS LOCK REGISTER**

| U-0 | U-0 | U-0 | U-0 | U-0 | U-0 | U-0 | R/W-0/0 |
|---|---|---|---|---|---|---|---|
| — | — | — | — | — | — | — | PPSLOCKED |
| bit 7 | | | | | | | bit 0 |

| **Legend:** | | |
|---|---|---|
| R = Readable bit | W = Writable bit | U = Unimplemented bit, read as ‘0’ |
| u = Bit is unchanged | x = Bit is unknown | -n/n = Value at POR and BOR/Value at all other Resets |
| ‘1’ = Bit is set | ‘0’ = Bit is cleared | |

bit 7-1 **Unimplemented:** Read as ‘0’

bit 0 **PPSLOCKED:** PPS Locked bit
1= PPS is locked. PPS selections can not be changed.
0= PPS is not locked. PPS selections can be changed.

 © 2013 Microchip Technology Inc.

chanhvinh.com



**TABLE 12-1: SUMMARY OF REGISTERS ASSOCIATED WITH THE PPS MODULE**

| Name | Bit 7 | Bit 6 | Bit 5 | Bit 4 | Bit 3 | Bit 2 | Bit 1 | Bit 0 | Register on page |
|---|---|---|---|---|---|---|---|---|---|
| PPSLOCK | — | — | — | — | — | — | — | PPSLOCKED | 144 |
| INTPPS | — | — | — | INTPPS<4:0> | | | | | 142 |
| T0CKIPPS | — | — | — | T0CKIPPS<4:0> | | | | | 142 |
| T1CKIPPS | — | — | — | T1CKIPPS<4:0> | | | | | 142 |
| T1GPPS | — | — | — | T1GPPS<4:0> | | | | | 142 |
| CCP1PPS | — | — | — | CCP1PPS<4:0> | | | | | 142 |
| CCP2PPS | — | — | — | CCP2PPS<4:0> | | | | | 142 |
| COGPPS | — | — | — | COGPPS<4:0> | | | | | 142 |
| SSPCLKPPS | — | — | — | SSPCLKPPS<4:0> | | | | | 142 |
| SSPDATPPS | — | — | — | SSPDATPPS<4:0> | | | | | 142 |
| SSPSSPPS | — | — | — | SSPSSPPS<4:0> | | | | | 142 |
| RXPPS | — | — | — | RXPPS<4:0> | | | | | 142 |
| CKPPS | — | — | — | CKPPS<4:0> | | | | | 142 |
| CLCIN0PPS | — | — | — | CLCIN0PPS<4:0> | | | | | 142 |
| CLCIN1PPS | — | — | — | CLCIN1PPS<4:0> | | | | | 142 |
| CLCIN2PPS | — | — | — | CLCIN2PPS<4:0> | | | | | 142 |
| CLCIN3PPS | — | — | — | CLCIN3PPS<4:0> | | | | | 142 |
| RA0PPS | — | — | — | RA0PPS<4:0> | | | | | 143 |
| RA1PPS | — | — | — | RA1PPS<4:0> | | | | | 143 |
| RA2PPS | — | — | — | RA2PPS<4:0> | | | | | 143 |
| RA4PPS | — | — | — | RA4PPS<4:0> | | | | | 143 |
| RA5PPS | — | — | — | RA5PPS<4:0> | | | | | 143 |
| RB4PPS(1) | — | — | — | RB4PPS<4:0> | | | | | 143 |
| RB5PPS(1) | — | — | — | RB5PPS<4:0> | | | | | 143 |
| RB6PPS(1) | — | — | — | RB6PPS<4:0> | | | | | 143 |
| RB7PPS(1) | — | — | — | RB7PPS<4:0> | | | | | 143 |
| RC0PPS | — | — | — | RC0PPS<4:0> | | | | | 143 |
| RC1PPS | — | — | — | RC1PPS<4:0> | | | | | 143 |
| RC2PPS | — | — | — | RC2PPS<4:0> | | | | | 143 |
| RC3PPS | — | — | — | RC3PPS<4:0> | | | | | 143 |
| RC4PPS | — | — | — | RC4PPS<4:0> | | | | | 143 |
| RC5PPS | — | — | — | RC5PPS<4:0> | | | | | 143 |
| RC6PPS(1) | — | — | — | RC6PPS<4:0> | | | | | 143 |
| RC7PPS(1) | — | — | — | RC7PPS<4:0> | | | | | 143 |

**Legend:** — = unimplemented, read as '0'. Shaded cells are unused by the DAC module.

**Note 1:** PIC16(L)F1708 only.

chanhvinh.com



**NOTES:**

chanhvinh.com

 © 2013 Microchip Technology Inc.

chanhvinh.com



## 13.0 INTERRUPT-ON-CHANGE

All pins on all ports can be configured to operate as Interrupt-On-Change (IOC) pins. An interrupt can be generated by detecting a signal that has either a rising edge or a falling edge. Any individual pin, or combination of pins, can be configured to generate an interrupt. The interrupt-on-change module has the following features:

- Interrupt-on-Change enable (Master Switch)
- Individual pin configuration
- Rising and falling edge detection
- Individual pin interrupt flags

Figure 13-1 is a block diagram of the IOC module.

### 13.1 Enabling the Module

To allow individual pins to generate an interrupt, the IOCIE bit of the INTCON register must be set. If the IOCIE bit is disabled, the edge detection on the pin will still occur, but an interrupt will not be generated.

### 13.2 Individual Pin Configuration

For each pin, a rising edge detector and a falling edge detector are present. To enable a pin to detect a rising edge, the associated bit of the IOCxP register is set. To enable a pin to detect a falling edge, the associated bit of the IOCxN register is set.

A pin can be configured to detect rising and falling edges simultaneously by setting the associated bits in both of the IOCxP and IOCxN registers.

### 13.3 Interrupt Flags

The bits located in the IOCxF registers are status flags that correspond to the interrupt-on-change pins of each port. If an expected edge is detected on an appropriately enabled pin, then the status flag for that pin will be set, and an interrupt will be generated if the IOCIE bit is set. The IOCIF bit of the INTCON register reflects the status of all IOCxF bits.

### 13.4 Clearing Interrupt Flags

The individual status flags, (IOCxF register bits), can be cleared by resetting them to zero. If another edge is detected during this clearing operation, the associated status flag will be set at the end of the sequence, regardless of the value actually being written.

In order to ensure that no detected edge is lost while clearing flags, only AND operations masking out known changed bits should be performed. The following sequence is an example of what should be performed.

**EXAMPLE 13-1: CLEARING INTERRUPT FLAGS (PORTA EXAMPLE)**

```
MOVLW   0xff
XORWF   IOCAF, W
ANDWF   IOCAF, F
```

### 13.5 Operation in Sleep

The interrupt-on-change interrupt sequence will wake the device from Sleep mode, if the IOCIE bit is set.

If an edge is detected while in Sleep mode, the affected IOCxF register will be updated prior to the first instruction executed out of Sleep.

chanhvinh.com



**FIGURE 13-1: INTERRUPT-ON-CHANGE BLOCK DIAGRAM (PORTA EXAMPLE)**

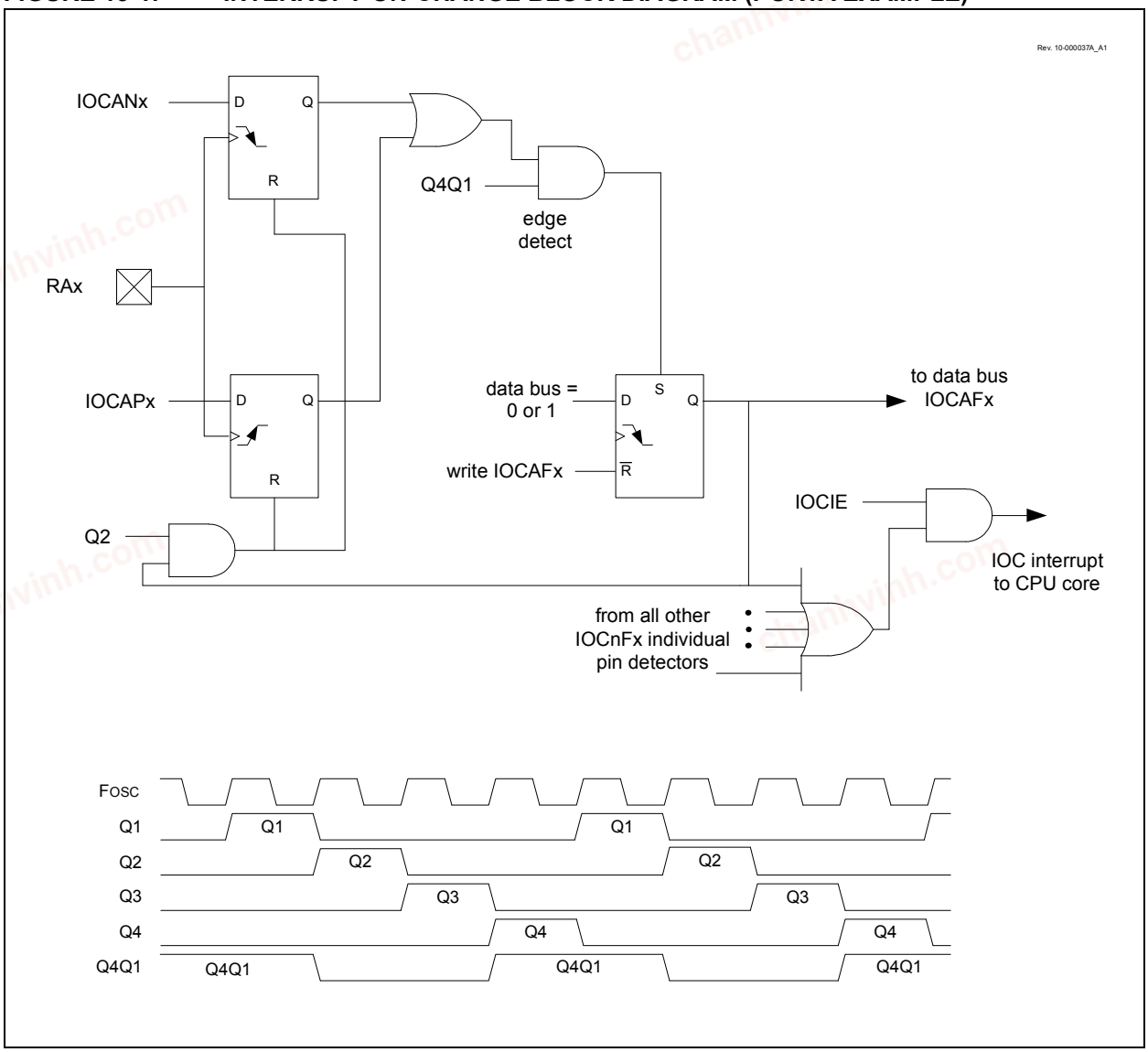


 © 2013 Microchip Technology Inc.

chanhvinh.com



## 13.6 Register Definitions: Interrupt-on-Change Control

### REGISTER 13-1: IOCAP: INTERRUPT-ON-CHANGE PORTA POSITIVE EDGE REGISTER

| U-0 | U-0 | R/W-0/0 | R/W-0/0 | R/W-0/0 | R/W-0/0 | R/W-0/0 | R/W-0/0 |
|---|---|---|---|---|---|---|---|
| — | — | IOCAP5 | IOCAP4 | IOCAP3 | IOCAP2 | IOCAP1 | IOCAP0 |
| bit 7 | | | | | | | bit 0 |

| **Legend:** | | |
|---|---|---|
| R = Readable bit | W = Writable bit | U = Unimplemented bit, read as '0' |
| u = Bit is unchanged | x = Bit is unknown | -n/n = Value at POR and BOR/Value at all other Resets |
| '1' = Bit is set | '0' = Bit is cleared | |

bit 7-6 **Unimplemented:** Read as '0'

bit 5-0 **IOCAP<5:0>:** Interrupt-on-Change PORTA Positive Edge Enable bits
1 = Interrupt-on-Change enabled on the pin for a positive going edge. IOCAFx bit and IOCIF flag will be set upon detecting an edge.
0 = Interrupt-on-Change disabled for the associated pin.

### REGISTER 13-2: IOCAN: INTERRUPT-ON-CHANGE PORTA NEGATIVE EDGE REGISTER

| U-0 | U-0 | R/W-0/0 | R/W-0/0 | R/W-0/0 | R/W-0/0 | R/W-0/0 | R/W-0/0 |
|---|---|---|---|---|---|---|---|
| — | — | IOCAN5 | IOCAN4 | IOCAN3 | IOCAN2 | IOCAN1 | IOCAN0 |
| bit 7 | | | | | | | bit 0 |

| **Legend:** | | |
|---|---|---|
| R = Readable bit | W = Writable bit | U = Unimplemented bit, read as '0' |
| u = Bit is unchanged | x = Bit is unknown | -n/n = Value at POR and BOR/Value at all other Resets |
| '1' = Bit is set | '0' = Bit is cleared | |

bit 7-6 **Unimplemented:** Read as '0'

bit 5-0 **IOCAN<5:0>:** Interrupt-on-Change PORTA Negative Edge Enable bits
1 = Interrupt-on-Change enabled on the pin for a negative going edge. IOCAFx bit and IOCIF flag will be set upon detecting an edge.
0 = Interrupt-on-Change disabled for the associated pin.

### REGISTER 13-3: IOCAF: INTERRUPT-ON-CHANGE PORTA FLAG REGISTER

| U-0 | U-0 | R/W/HS-0/0 | R/W/HS-0/0 | R/W/HS-0/0 | R/W/HS-0/0 | R/W/HS-0/0 | R/W/HS-0/0 |
|---|---|---|---|---|---|---|---|
| — | — | IOCAF5 | IOCAF4 | IOCAF3 | IOCAF2 | IOCAF1 | IOCAF0 |
| bit 7 | | | | | | | bit 0 |

| **Legend:** | | |
|---|---|---|
| R = Readable bit | W = Writable bit | U = Unimplemented bit, read as '0' |
| u = Bit is unchanged | x = Bit is unknown | -n/n = Value at POR and BOR/Value at all other Resets |
| '1' = Bit is set | '0' = Bit is cleared | HS - Bit is set in hardware |

bit 7-6 **Unimplemented:** Read as '0'

bit 5-0 **IOCAF<5:0>:** Interrupt-on-Change PORTA Flag bits
1 = An enabled change was detected on the associated pin.
Set when IOCAPx = 1 and a rising edge was detected on RAx, or when IOCANx = 1 and a falling edge was detected on RAx.
0 = No change was detected, or the user cleared the detected change.

chanhvinh.com



### REGISTER 13-4: IOCBP: INTERRUPT-ON-CHANGE PORTB POSITIVE EDGE REGISTER(1)

| R/W-0/0 | R/W-0/0 | R/W-0/0 | R/W-0/0 | U-0 | U-0 | U-0 | U-0 |
|---|---|---|---|---|---|---|---|
| IOCBP7 | IOCBP6 | IOCBP5 | IOCBP4 | — | — | — | — |
| bit 7 | | | | | | | bit 0 |

| Legend: | | |
|---|---|---|
| R = Readable bit | W = Writable bit | U = Unimplemented bit, read as '0' |
| u = Bit is unchanged | x = Bit is unknown | -n/n = Value at POR and BOR/Value at all other Resets |
| '1' = Bit is set | '0' = Bit is cleared | |

bit 7-4 **IOCBP<7:4>:** Interrupt-on-Change PORTB Positive Edge Enable bits
1 = Interrupt-on-Change enabled on the pin for a positive going edge. IOCBFx bit and IOCIF flag will be set upon detecting an edge.
0 = Interrupt-on-Change disabled for the associated pin.

bit 3-0 **Unimplemented:** Read as '0'

**Note 1:** PIC16(L)F1708 only.

### REGISTER 13-5: IOCBN: INTERRUPT-ON-CHANGE PORTB NEGATIVE EDGE REGISTER(1)

| R/W-0/0 | R/W-0/0 | R/W-0/0 | R/W-0/0 | U-0 | U-0 | U-0 | U-0 |
|---|---|---|---|---|---|---|---|
| IOCBN7 | IOCBN6 | IOCBN5 | IOCBN4 | — | — | — | — |
| bit 7 | | | | | | | bit 0 |

| Legend: | | |
|---|---|---|
| R = Readable bit | W = Writable bit | U = Unimplemented bit, read as '0' |
| u = Bit is unchanged | x = Bit is unknown | -n/n = Value at POR and BOR/Value at all other Resets |
| '1' = Bit is set | '0' = Bit is cleared | |

bit 7-4 **IOCBN<7:4>:** Interrupt-on-Change PORTB Negative Edge Enable bits
1 = Interrupt-on-Change enabled on the pin for a negative going edge. IOCBFx bit and IOCIF flag will be set upon detecting an edge.
0 = Interrupt-on-Change disabled for the associated pin.

bit 3-0 **Unimplemented:** Read as '0'

**Note 1:** PIC16(L)F1708 only.

### REGISTER 13-6: IOCBF: INTERRUPT-ON-CHANGE PORTB FLAG REGISTER(1)

| R/W/HS-0/0 | R/W/HS-0/0 | R/W/HS-0/0 | R/W/HS-0/0 | U-0 | U-0 | U-0 | U-0 |
|---|---|---|---|---|---|---|---|
| IOCBF7 | IOCBF6 | IOCBF5 | IOCBF4 | — | — | — | — |
| bit 7 | | | | | | | bit 0 |

| Legend: | | |
|---|---|---|
| R = Readable bit | W = Writable bit | U = Unimplemented bit, read as '0' |
| u = Bit is unchanged | x = Bit is unknown | -n/n = Value at POR and BOR/Value at all other Resets |
| '1' = Bit is set | '0' = Bit is cleared | HS - Bit is set in hardware |

bit 7-4 **IOCBF<7:4>:** Interrupt-on-Change PORTB Flag bits
1 = An enabled change was detected on the associated pin.
Set when IOCBPx = 1 and a rising edge was detected on RBx, or when IOCBNx = 1 and a falling edge was detected on RBx.
0 = No change was detected, or the user cleared the detected change.

bit 3-0 **Unimplemented:** Read as '0'

**Note 1:** PIC16(L)F1708 only.

 © 2013 Microchip Technology Inc.

chanhvinh.com



### REGISTER 13-7: IOCCP: INTERRUPT-ON-CHANGE PORTC POSITIVE EDGE REGISTER

| R/W-0/0 | R/W-0/0 | R/W-0/0 | R/W-0/0 | R/W-0/0 | R/W-0/0 | R/W-0/0 | R/W-0/0 |
|---|---|---|---|---|---|---|---|
| IOCCP7(1) | IOCCP6(1) | IOCCP5 | IOCCP4 | IOCCP3 | IOCCP2 | IOCCP1 | IOCCP0 |
| bit 7 | | | | | | | bit 0 |

| Legend: | | |
|---|---|---|
| R = Readable bit | W = Writable bit | U = Unimplemented bit, read as '0' |
| u = Bit is unchanged | x = Bit is unknown | -n/n = Value at POR and BOR/Value at all other Resets |
| '1' = Bit is set | '0' = Bit is cleared | |

bit 7-0 **IOCCP<7:0>:** Interrupt-on-Change PORTC Positive Edge Enable bits
1 = Interrupt-on-Change enabled on the pin for a positive going edge. IOCCFx bit and IOCIF flag will be set upon detecting an edge.
0 = Interrupt-on-Change disabled for the associated pin.

**Note 1:** PIC16(L)F1708 only.

### REGISTER 13-8: IOCCN: INTERRUPT-ON-CHANGE PORTC NEGATIVE EDGE REGISTER

| R/W-0/0 | R/W-0/0 | R/W-0/0 | R/W-0/0 | R/W-0/0 | R/W-0/0 | R/W-0/0 | R/W-0/0 |
|---|---|---|---|---|---|---|---|
| IOCCN7(1) | IOCCN6(1) | IOCCN5 | IOCCN4 | IOCCN3 | IOCCN2 | IOCCN1 | IOCCN0 |
| bit 7 | | | | | | | bit 0 |

| Legend: | | |
|---|---|---|
| R = Readable bit | W = Writable bit | U = Unimplemented bit, read as '0' |
| u = Bit is unchanged | x = Bit is unknown | -n/n = Value at POR and BOR/Value at all other Resets |
| '1' = Bit is set | '0' = Bit is cleared | |

bit 7-0 **IOCCN<7:0>:** Interrupt-on-Change PORTC Negative Edge Enable bits
1 = Interrupt-on-Change enabled on the pin for a negative going edge. IOCCFx bit and IOCIF flag will be set upon detecting an edge.
0 = Interrupt-on-Change disabled for the associated pin.

**Note 1:** PIC16(L)F1708 only.

### REGISTER 13-9: IOCCF: INTERRUPT-ON-CHANGE PORTC FLAG REGISTER

| R/W/HS-0/0 | R/W/HS-0/0 | R/W/HS-0/0 | R/W/HS-0/0 | R/W/HS-0/0 | R/W/HS-0/0 | R/W/HS-0/0 | R/W/HS-0/0 |
|---|---|---|---|---|---|---|---|
| IOCCF7(1) | IOCCF6(1) | IOCCF5 | IOCCF4 | IOCCF3 | IOCCF2 | IOCCF1 | IOCCF0 |
| bit 7 | | | | | | | bit 0 |

| Legend: | | |
|---|---|---|
| R = Readable bit | W = Writable bit | U = Unimplemented bit, read as '0' |
| u = Bit is unchanged | x = Bit is unknown | -n/n = Value at POR and BOR/Value at all other Resets |
| '1' = Bit is set | '0' = Bit is cleared | HS - Bit is set in hardware |

bit 7-0 **IOCCF<7:0>:** Interrupt-on-Change PORTC Flag bits
1 = An enabled change was detected on the associated pin.
Set when IOCCPx = 1 and a rising edge was detected on RCx, or when IOCCNx = 1 and a falling edge was detected on RCx.
0 = No change was detected, or the user cleared the detected change.

**Note 1:** PIC16(L)F1708 only.

chanhvinh.com



**TABLE 13-1: SUMMARY OF REGISTERS ASSOCIATED WITH INTERRUPT-ON-CHANGE**

| Name | Bit 7 | Bit 6 | Bit 5 | Bit 4 | Bit 3 | Bit 2 | Bit 1 | Bit 0 | Register on Page |
|---|---|---|---|---|---|---|---|---|---|
| ANSELA | — | — | — | ANSA4 | — | ANSA2 | ANSA1 | ANSA0 | 125 |
| ANSELB(1) | — | — | ANSB5 | ANSB4 | — | — | — | — | 131 |
| ANSELC | ANSC7(1) | ANSC6(1) | ANSC5(2) | ANSC4(2) | ANSC3 | ANSC2 | ANSC1 | ANSC0 | 136 |
| INTCON | GIE | PEIE | TMR0IE | INTE | IOCIE | TMR0IF | INTF | IOCIF | 86 |
| IOCAF | — | — | IOCAF5 | IOCAF4 | IOCAF3 | IOCAF2 | IOCAF1 | IOCAF0 | 149 |
| IOCAN | — | — | IOCAN5 | IOCAN4 | IOCAN3 | IOCAN2 | IOCAN1 | IOCAN0 | 149 |
| IOCAP | — | — | IOCAP5 | IOCAP4 | IOCAP3 | IOCAP2 | IOCAP1 | IOCAP0 | 149 |
| IOCBF(1) | IOCBF7 | IOCBF6 | IOCBF5 | IOCBF4 | — | — | — | — | 150 |
| IOCBN(1) | IOCBN7 | IOCBN6 | IOCBN5 | IOCBN4 | — | — | — | — | 150 |
| IOCBP(1) | IOCBP7 | IOCBP6 | IOCBP5 | IOCBP4 | — | — | — | — | 150 |
| IOCCF | IOCCF7(1) | IOCCF6(1) | IOCCF5 | IOCCF4 | IOCCF3 | IOCCF2 | IOCCF1 | IOCCF0 | 151 |
| IOCCN | IOCCN7(1) | IOCCN6(1) | IOCCN5 | IOCCN4 | IOCCN3 | IOCCN2 | IOCCN1 | IOCCN0 | 151 |
| IOCCP | IOCCP7(1) | IOCCP6(1) | IOCCP5 | IOCCP4 | IOCCP3 | IOCCP2 | IOCCP1 | IOCCP0 | 151 |
| TRISA | — | — | TRISA5 | TRISA4 | —(3) | TRISA2 | TRISA1 | TRISA0 | 124 |
| TRISB(1) | TRISB7 | TRISB6 | TRISB5 | TRISB4 | — | — | — | — | 130 |
| TRISC | TRISC7(1) | TRISC6(1) | TRISC5 | TRISC4 | TRISC3 | TRISC2 | TRISC1 | TRISC0 | 135 |

**Legend:** — = unimplemented location, read as '0'. Shaded cells are not used by interrupt-on-change.

**Note 1:** PIC16(L)F1708 only.

**2:** PIC16(L)F1704 only.

**3:** Unimplemented, read as '1'.

 © 2013 Microchip Technology Inc.

chanhvinh.com



# 14.0 FIXED VOLTAGE REFERENCE (FVR)

The Fixed Voltage Reference, or FVR, is a stable voltage reference, independent of VDD, with 1.024V, 2.048V or 4.096V selectable output levels. The output of the FVR can be configured to supply a reference voltage to the following:

- ADC input channel
- ADC positive reference
- Comparator positive input
- Digital-to-Analog Converter (DAC)

The FVR can be enabled by setting the FVREN bit of the FVRCON register.

## 14.1 Independent Gain Amplifiers

The output of the FVR supplied to the ADC, Comparators, and DAC is routed through two independent programmable gain amplifiers. Each amplifier can be programmed for a gain of 1x, 2x or 4x, to produce the three possible voltage levels.

The ADFVR<1:0> bits of the FVRCON register are used to enable and configure the gain amplifier settings for the reference supplied to the ADC module. Reference **Section 20.0 "Analog-to-Digital Converter (ADC) Module"** for additional information.

The CDAFVR<1:0> bits of the FVRCON register are used to enable and configure the gain amplifier settings for the reference supplied to the DAC and comparator module. Reference **Section 22.0 "8-Bit Digital-to-Analog Converter (DAC1) Module"** and **Section 16.0 "Comparator Module"** for additional information.

## 14.2 FVR Stabilization Period

When the Fixed Voltage Reference module is enabled, it requires time for the reference and amplifier circuits to stabilize. Once the circuits stabilize and are ready for use, the FVRRDY bit of the FVRCON register will be set. See Figure 33-19: FVR Stabilization Period.

chanhvinh.com



**FIGURE 14-1: VOLTAGE REFERENCE BLOCK DIAGRAM**

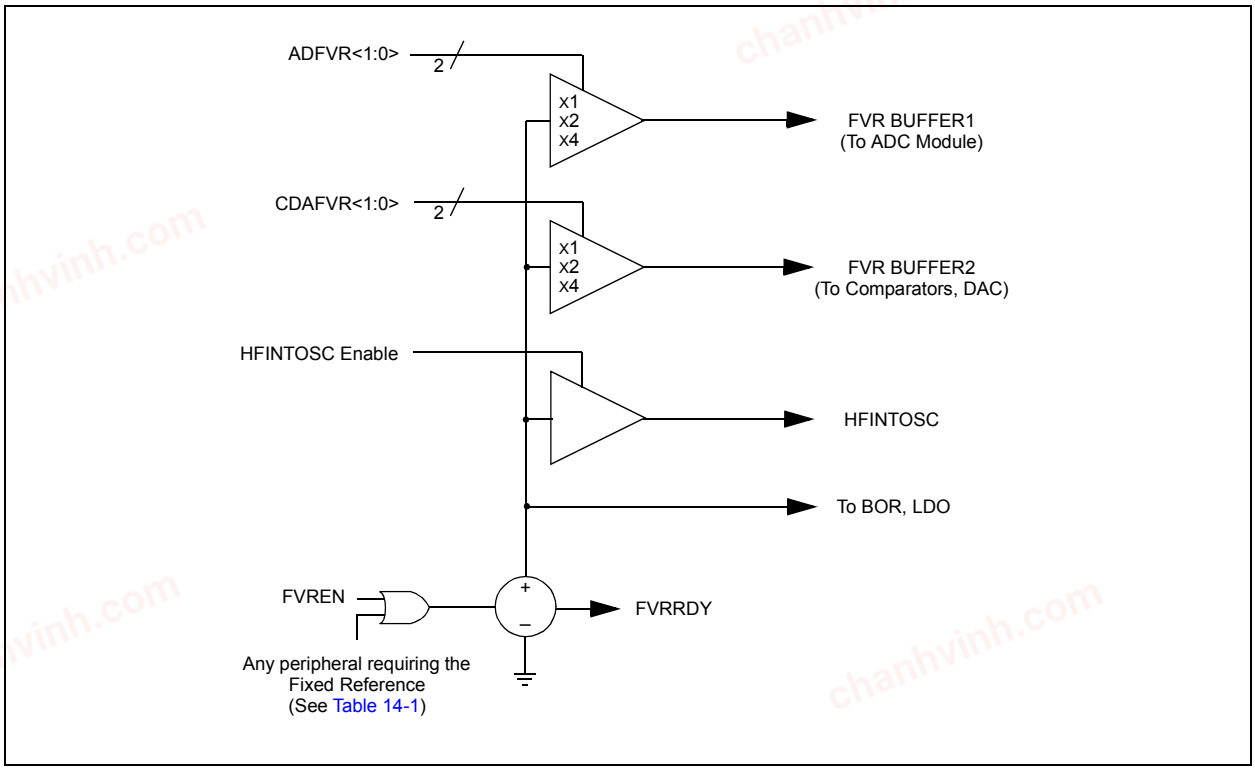


**TABLE 14-1: PERIPHERALS REQUIRING THE FIXED VOLTAGE REFERENCE (FVR)**

| Peripheral | Conditions | Description |
|---|---|---|
| HFINTOSC | FOSC<2:0> = 100 and IRCF<3:0> ≠ 000x | INTOSC is active and device is not in Sleep |
| BOR | BOREN<1:0> = 11 | BOR always enabled |
| | BOREN<1:0> = 10 and BORFS = 1 | BOR disabled in Sleep mode, BOR Fast Start enabled |
| | BOREN<1:0> = 01 and BORFS = 1 | BOR under software control, BOR Fast Start enabled |
| LDO | All PIC16F1704/8 devices, when VREGPM = 1 and not in Sleep | The device runs off of the ULP regulator when in Sleep mode |

 © 2013 Microchip Technology Inc.

chanhvinh.com



## 14.3 Register Definitions: FVR Control

**REGISTER 14-1: FVRCON: FIXED VOLTAGE REFERENCE CONTROL REGISTER**

| R/W-0/0 | R-q/q | R/W-0/0 | R/W-0/0 | R/W-0/0 | R/W-0/0 | R/W-0/0 | R/W-0/0 |
|---|---|---|---|---|---|---|---|
| FVREN | FVRRDY(1) | TSEN(3) | TSRNG(3) | CDAFVR<1:0> | | ADFVR<1:0> | |
| bit 7 | | | | | | | bit 0 |

| Legend: | | |
|---|---|---|
| R = Readable bit | W = Writable bit | U = Unimplemented bit, read as '0' |
| u = Bit is unchanged | x = Bit is unknown | -n/n = Value at POR and BOR/Value at all other Resets |
| '1' = Bit is set | '0' = Bit is cleared | q = Value depends on condition |

bit 7 **FVREN:** Fixed Voltage Reference Enable bit
1 = Fixed Voltage Reference is enabled
0 = Fixed Voltage Reference is disabled

bit 6 **FVRRDY:** Fixed Voltage Reference Ready Flag bit(1)
1 = Fixed Voltage Reference output is ready for use
0 = Fixed Voltage Reference output is not ready or not enabled

bit 5 **TSEN:** Temperature Indicator Enable bit(3)
1 = Temperature Indicator is enabled
0 = Temperature Indicator is disabled

bit 4 **TSRNG:** Temperature Indicator Range Selection bit(3)
1 = $V_{OUT} = V_{DD} - 4V_T$ (High Range)
0 = $V_{OUT} = V_{DD} - 2V_T$ (Low Range)

bit 3-2 **CDAFVR<1:0>:** Comparator FVR Buffer Gain Selection bits
11 = Comparator FVR Buffer Gain is 4x, with output $V_{CDAFVR} = 4x\ V_{FVR}$(2)
10 = Comparator FVR Buffer Gain is 2x, with output $V_{CDAFVR} = 2x\ V_{FVR}$(2)
01 = Comparator FVR Buffer Gain is 1x, with output $V_{CDAFVR} = 1x\ V_{FVR}$
00 = Comparator FVR Buffer is off

bit 1-0 **ADFVR<1:0>:** ADC FVR Buffer Gain Selection bit
11 = ADC FVR Buffer Gain is 4x, with output $V_{ADFVR} = 4x\ V_{FVR}$(2)
10 = ADC FVR Buffer Gain is 2x, with output $V_{ADFVR} = 2x\ V_{FVR}$(2)
01 = ADC FVR Buffer Gain is 1x, with output $V_{ADFVR} = 1x\ V_{FVR}$
00 = ADC FVR Buffer is off

**Note 1:** FVRRDY is always '1' on PIC16F1704/8 only.
**2:** Fixed Voltage Reference output cannot exceed $V_{DD}$.
**3:** See **Section 15.0 "Temperature Indicator Module"** for additional information.

**TABLE 14-2: SUMMARY OF REGISTERS ASSOCIATED WITH FIXED VOLTAGE REFERENCE**

| Name | Bit 7 | Bit 6 | Bit 5 | Bit 4 | Bit 3 | Bit 2 | Bit 1 | Bit 0 | Register on page |
|---|---|---|---|---|---|---|---|---|---|
| FVRCON | FVREN | FVRRDY | TSEN | TSRNG | CDAFVR<1:0> | | ADFVR<1:0> | | 155 |

**Legend:** Shaded cells are not used with the Fixed Voltage Reference.

chanhvinh.com



**NOTES:**

chanhvinh.com

 © 2013 Microchip Technology Inc.

chanhvinh.com



## 15.0 TEMPERATURE INDICATOR MODULE

This family of devices is equipped with a temperature circuit designed to measure the operating temperature of the silicon die. The circuit's range of operating temperature falls between -40°C and +85°C. The output is a voltage that is proportional to the device temperature. The output of the temperature indicator is internally connected to the device ADC.

The circuit may be used as a temperature threshold detector or a more accurate temperature indicator, depending on the level of calibration performed. A one-point calibration allows the circuit to indicate a temperature closely surrounding that point. A two-point calibration allows the circuit to sense the entire range of temperature more accurately. Reference Application Note AN1333, "*Use and Calibration of the Internal Temperature Indicator*" (DS01333) for more details regarding the calibration process.

### 15.1 Circuit Operation

Figure 15-1 shows a simplified block diagram of the temperature circuit. The proportional voltage output is achieved by measuring the forward voltage drop across multiple silicon junctions.

Equation 15-1 describes the output characteristics of the temperature indicator.

**EQUATION 15-1: VOUT RANGES**

$$\text{High Range: } V_{OUT} = V_{DD} - 4V_T$$

$$\text{Low Range: } V_{OUT} = V_{DD} - 2V_T$$

The temperature sense circuit is integrated with the Fixed Voltage Reference (FVR) module. See **Section 14.0 "Fixed Voltage Reference (FVR)"** for more information.

The circuit is enabled by setting the TSEN bit of the FVRCON register. When disabled, the circuit draws no current.

The circuit operates in either high or low range. The high range, selected by setting the TSRNG bit of the FVRCON register, provides a wider output voltage. This provides more resolution over the temperature range, but may be less consistent from part to part. This range requires a higher bias voltage to operate and thus, a higher VDD is needed.

The low range is selected by clearing the TSRNG bit of the FVRCON register. The low range generates a lower voltage drop and thus, a lower bias voltage is needed to operate the circuit. The low range is provided for low voltage operation.

**FIGURE 15-1: TEMPERATURE CIRCUIT DIAGRAM**

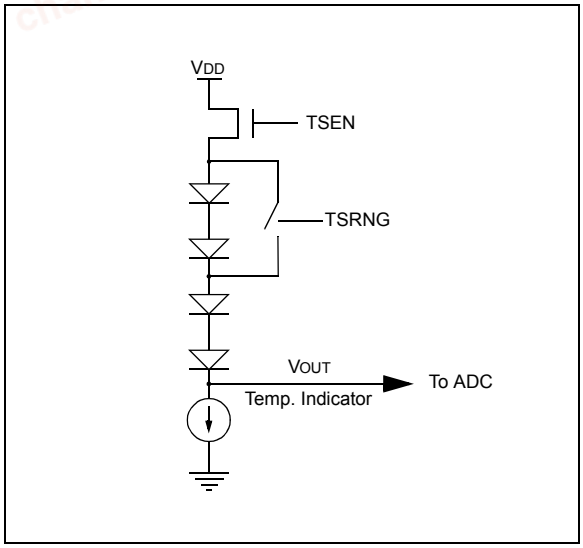


### 15.2 Minimum Operating VDD

When the temperature circuit is operated in low range, the device may be operated at any operating voltage that is within specifications.

When the temperature circuit is operated in high range, the device operating voltage, VDD, must be high enough to ensure that the temperature circuit is correctly biased.

Table 15-1 shows the recommended minimum VDD vs. range setting.

**TABLE 15-1: RECOMMENDED VDD VS. RANGE**

| Min. VDD, TSRNG = 1 | Min. VDD, TSRNG = 0 |
|---|---|
| 3.6V | 1.8V |

### 15.3 Temperature Output

The output of the circuit is measured using the internal Analog-to-Digital Converter. A channel is reserved for the temperature circuit output. Refer to **Section 20.0 "Analog-to-Digital Converter (ADC) Module"** for detailed information.

chanhvinh.com



## 15.4 ADC Acquisition Time

To ensure accurate temperature measurements, the user must wait at least 200 μs after the ADC input multiplexer is connected to the temperature indicator output before the conversion is performed. In addition, the user must wait 200 μs between sequential conversions of the temperature indicator output.

**TABLE 15-2: SUMMARY OF REGISTERS ASSOCIATED WITH THE TEMPERATURE INDICATOR**

| Name | Bit 7 | Bit 6 | Bit 5 | Bit 4 | Bit 3 | Bit 2 | Bit 1 | Bit 0 | Register on page |
|---|---|---|---|---|---|---|---|---|---|
| FVRCON | FVREN | FVRRDY | TSEN | TSRNG | CDFVR<1:0> | | ADFVR<1:0> | | 155 |

**Legend:** Shaded cells are unused by the temperature indicator module.

 © 2013 Microchip Technology Inc.

chanhvinh.com



## 16.0 COMPARATOR MODULE

Comparators are used to interface analog circuits to a digital circuit by comparing two analog voltages and providing a digital indication of their relative magnitudes. Comparators are very useful mixed signal building blocks because they provide analog functionality independent of program execution. The analog comparator module includes the following features:

- Independent comparator control
- Programmable input selection
- Comparator output is available internally/externally
- Programmable output polarity
- Interrupt-on-change
- Wake-up from Sleep
- Programmable Speed/Power optimization
- PWM shutdown
- Programmable and fixed voltage reference

### 16.1 Comparator Overview

A single comparator is shown in Figure 16-1 along with the relationship between the analog input levels and the digital output. When the analog voltage at VIN+ is less than the analog voltage at VIN-, the output of the comparator is a digital low level. When the analog voltage at VIN+ is greater than the analog voltage at VIN-, the output of the comparator is a digital high level.

The comparators available for this device are located in Table 16-1.

**TABLE 16-1: AVAILABLE COMPARATORS**

| Device | C1 | C2 |
|---|---|---|
| PIC16(L)F1704/8 | • | • |

**FIGURE 16-1: SINGLE COMPARATOR**

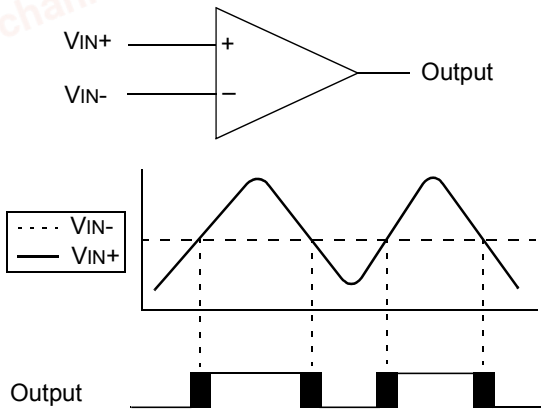


**Note:** The black areas of the output of the comparator represents the uncertainty due to input offsets and response time.

chanhvinh.com



**FIGURE 16-2: COMPARATOR MODULE SIMPLIFIED BLOCK DIAGRAM**

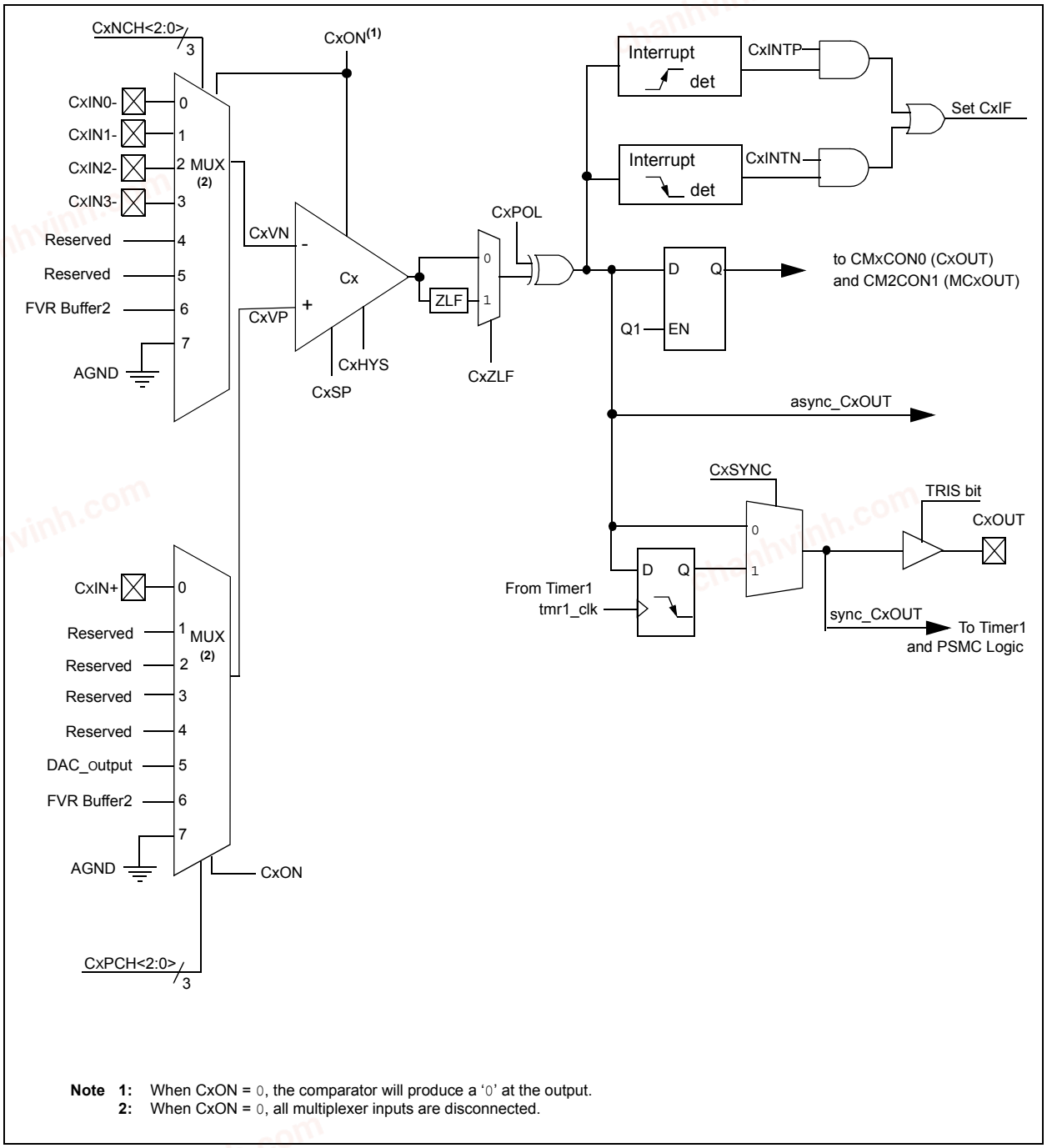


**Note 1:** When CxON = 0, the comparator will produce a '0' at the output.
**2:** When CxON = 0, all multiplexer inputs are disconnected.

 © 2013 Microchip Technology Inc.

chanhvinh.com



## 16.2 Comparator Control

Each comparator has two control registers: CMxCON0 and CMxCON1.

The CMxCON0 register (see Register 16-1) contains Control and Status bits for the following:

- Enable
- Output
- Output polarity
- Zero latency filter
- Speed/Power selection
- Hysteresis enable
- Output synchronization

The CMxCON1 register (see Register 16-2) contains Control bits for the following:

- Interrupt enable
- Interrupt edge polarity
- Positive input channel selection
- Negative input channel selection

### 16.2.1 COMPARATOR ENABLE

Setting the CxON bit of the CMxCON0 register enables the comparator for operation. Clearing the CxON bit disables the comparator resulting in minimum current consumption.

### 16.2.2 COMPARATOR OUTPUT SELECTION

The output of the comparator can be monitored by reading either the CxOUT bit of the CMxCON0 register or the MCxOUT bit of the CMOUT register. In order to make the output available for an external connection, the following conditions must be true:

- Desired pin PPS control
- Corresponding TRIS bit must be cleared
- CxON bit of the CMxCON0 register must be set

| | |
|---|---|
| **Note 1:** | The internal output of the comparator is latched with each instruction cycle. Unless otherwise specified, external outputs are not latched. |

### 16.2.3 COMPARATOR OUTPUT POLARITY

Inverting the output of the comparator is functionally equivalent to swapping the comparator inputs. The polarity of the comparator output can be inverted by setting the CxPOL bit of the CMxCON0 register. Clearing the CxPOL bit results in a non-inverted output.

Table 16-2 shows the output state versus input conditions, including polarity control.

**TABLE 16-2: COMPARATOR OUTPUT STATE VS. INPUT CONDITIONS**

| Input Condition | CxPOL | CxOUT |
|---|---|---|
| CxVN > CxVP | 0 | 0 |
| CxVN < CxVP | 0 | 1 |
| CxVN > CxVP | 1 | 1 |
| CxVN < CxVP | 1 | 0 |

### 16.2.4 COMPARATOR SPEED/POWER SELECTION

The trade-off between speed or power can be optimized during program execution with the CxSP control bit. The default state for this bit is '1', which selects the Normal-Speed mode. Device power consumption can be optimized at the cost of slower comparator propagation delay by clearing the CxSP bit to '0'.

chanhvinh.com



## 16.3 Comparator Hysteresis

A selectable amount of separation voltage can be added to the input pins of each comparator to provide a hysteresis function to the overall operation. Hysteresis is enabled by setting the CxHYS bit of the CMxCON0 register.

See Comparator Specifications in Table 32-18: Comparator Specifications for more information.

## 16.4 Timer1 Gate Operation

The output resulting from a comparator operation can be used as a source for gate control of Timer1. See **Section 25.6 "Timer1 Gate"** for more information. This feature is useful for timing the duration or interval of an analog event.

It is recommended that the comparator output be synchronized to Timer1. This ensures that Timer1 does not increment while a change in the comparator is occurring.

### 16.4.1 COMPARATOR OUTPUT SYNCHRONIZATION

The output from a comparator can be synchronized with Timer1 by setting the CxSYNC bit of the CMxCON0 register.

Once enabled, the comparator output is latched on the falling edge of the Timer1 source clock. If a prescaler is used with Timer1, the comparator output is latched after the prescaling function. To prevent a race condition, the comparator output is latched on the falling edge of the Timer1 clock source and Timer1 increments on the rising edge of its clock source. See the Comparator Block Diagram (Figure 16-2) and the Timer1 Block Diagram (Figure 25-1) for more information.

## 16.5 Comparator Interrupt

An interrupt can be generated upon a change in the output value of the comparator for each comparator, a rising edge detector and a falling edge detector are present.

When either edge detector is triggered and its associated enable bit is set (CxINTP and/or CxINTN bits of the CMxCON1 register), the Corresponding Interrupt Flag bit (CxIF bit of the PIR2 register) will be set.

To enable the interrupt, you must set the following bits:

- CxON, CxPOL and CxSP bits of the CMxCON0 register
- CxIE bit of the PIE2 register
- CxINTP bit of the CMxCON1 register (for a rising edge detection)
- CxINTN bit of the CMxCON1 register (for a falling edge detection)
- PEIE and GIE bits of the INTCON register

The associated interrupt flag bit, CxIF bit of the PIR2 register, must be cleared in software. If another edge is detected while this flag is being cleared, the flag will still be set at the end of the sequence.

| | |
|---|---|
| **Note:** | Although a comparator is disabled, an interrupt can be generated by changing the output polarity with the CxPOL bit of the CMxCON0 register, or by switching the comparator on or off with the CxON bit of the CMxCON0 register. |

## 16.6 Comparator Positive Input Selection

Configuring the CxPCH<2:0> bits of the CMxCON1 register directs an internal voltage reference or an analog pin to the non-inverting input of the comparator:

- CxIN+ analog pin
- DAC output
- FVR (Fixed Voltage Reference)
- VSS (Ground)

See **Section 14.0 "Fixed Voltage Reference (FVR)"** for more information on the Fixed Voltage Reference module.

See **Section 22.0 "8-Bit Digital-to-Analog Converter (DAC1) Module"** for more information on the DAC input signal.

Any time the comparator is disabled (CxON = 0), all comparator inputs are disabled.

## 16.7 Comparator Negative Input Selection

The CxNCH<2:0> bits of the CMxCON0 register direct an analog input pin and internal reference voltage or analog ground to the inverting input of the comparator:

- CxIN- pin
- FVR (Fixed Voltage Reference)
- Analog Ground

Some inverting input selections share a pin with the operational amplifier output function. Enabling both functions at the same time will direct the operational amplifier output to the comparator inverting input.

| | |
|---|---|
| **Note:** | To use CxINy+ and CxINy- pins as analog input, the appropriate bits must be set in the ANSEL register and the corresponding TRIS bits must also be set to disable the output drivers. |

 © 2013 Microchip Technology Inc.

chanhvinh.com



## 16.8 Comparator Response Time

The comparator output is indeterminate for a period of time after the change of an input source or the selection of a new reference voltage. This period is referred to as the response time. The response time of the comparator differs from the settling time of the voltage reference. Therefore, both of these times must be considered when determining the total response time to a comparator input change. See the Comparator and Voltage Reference Specifications in Table 32-18: Comparator Specifications for more details.

## 16.9 Zero Latency Filter

In high-speed operation, and under proper circuit conditions, it is possible for the comparator output to oscillate. This oscillation can have adverse effects on the hardware and software relying on this signal. Therefore, a digital filter has been added to the comparator output to suppress the comparator output oscillation. Once the comparator output changes, the output is prevented from reversing the change for a nominal time of 20 ns. This allows the comparator output to stabilize without affecting other dependent devices. Refer to Figure 16-3.

**FIGURE 16-3: COMPARATOR ZERO LATENCY FILTER OPERATION**

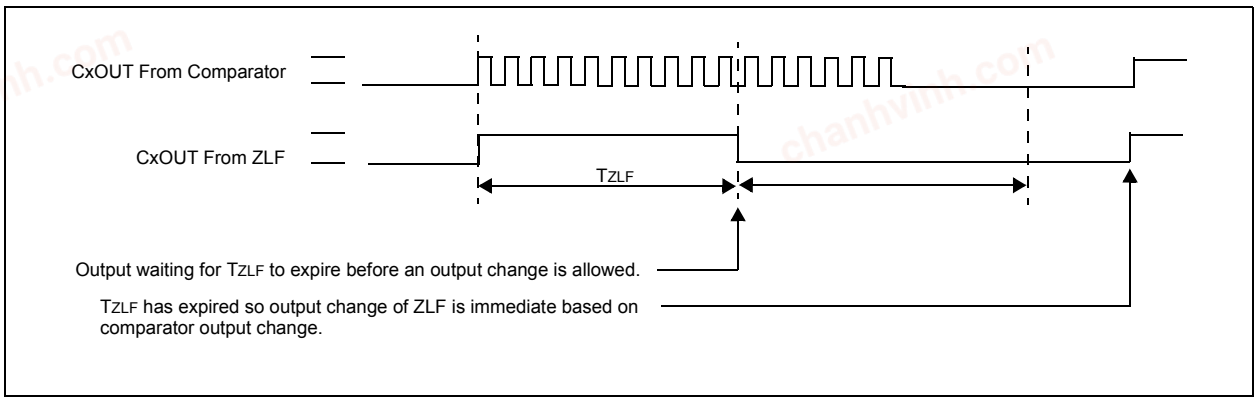

chanhvinh.com



## 16.10 Analog Input Connection Considerations

A simplified circuit for an analog input is shown in Figure 16-4. Since the analog input pins share their connection with a digital input, they have reverse biased ESD protection diodes to VDD and VSS. The analog input, therefore, must be between VSS and VDD. If the input voltage deviates from this range by more than 0.6V in either direction, one of the diodes is forward biased and a latch-up may occur.

A maximum source impedance of 10 kΩ is recommended for the analog sources. Also, any external component connected to an analog input pin, such as a capacitor or a Zener diode, should have very little leakage current to minimize inaccuracies introduced.

**Note 1:** When reading a PORT register, all pins configured as analog inputs will read as a '0'. Pins configured as digital inputs will convert as an analog input, according to the input specification.

**2:** Analog levels on any pin defined as a digital input, may cause the input buffer to consume more current than is specified.

**FIGURE 16-4: ANALOG INPUT MODEL**

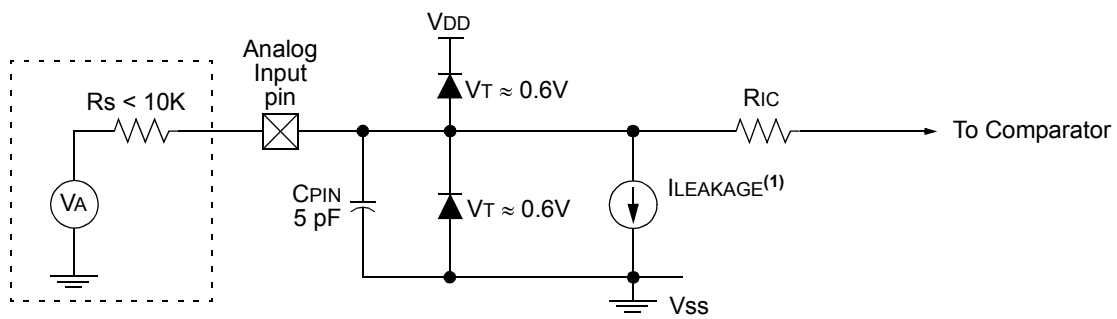


**Legend:**
CPIN = Input Capacitance
ILEAKAGE = Leakage Current at the pin due to various junctions
RIC = Interconnect Resistance
RS = Source Impedance
VA = Analog Voltage
VT = Threshold Voltage

**Note 1:** See I/O Ports in Table 32-4: I/O Ports.

 © 2013 Microchip Technology Inc.

chanhvinh.com



## 16.11 Register Definitions: Comparator Control

### REGISTER 16-1: CMxCON0: COMPARATOR Cx CONTROL REGISTER 0

| R/W-0/0 | R-0/0 | U-0 | R/W-0/0 | R/W-0/0 | R/W-1/1 | R/W-0/0 | R/W-0/0 |
|---|---|---|---|---|---|---|---|
| CxON | CxOUT | — | CxPOL | CxZLF | CxSP | CxHYS | CxSYNC |
| bit 7 | | | | | | | bit 0 |

| **Legend:** | | |
|---|---|---|
| R = Readable bit | W = Writable bit | U = Unimplemented bit, read as ‘0’ |
| u = Bit is unchanged | x = Bit is unknown | -n/n = Value at POR and BOR/Value at all other Resets |
| ‘1’ = Bit is set | ‘0’ = Bit is cleared | |

bit 7 **CxON:** Comparator Enable bit
1 = Comparator is enabled
0 = Comparator is disabled and consumes no active power

bit 6 **CxOUT:** Comparator Output bit
If CxPOL = 1 (inverted polarity):
1 = CxVP < CxVN
0 = CxVP > CxVN
If CxPOL = 0 (non-inverted polarity):
1 = CxVP > CxVN
0 = CxVP < CxVN

bit 5 **Unimplemented:** Read as ‘0’

bit 4 **CxPOL:** Comparator Output Polarity Select bit
1 = Comparator output is inverted
0 = Comparator output is not inverted

bit 3 **CxZLF:** Comparator Zero Latency Filter Enable bit
1 = Comparator output is filtered
0 = Comparator output is unfiltered

bit 2 **CxSP:** Comparator Speed/Power Select bit
1 = Comparator operates in normal power, higher speed mode
0 = Comparator operates in low-power, low-speed mode

bit 1 **CxHYS:** Comparator Hysteresis Enable bit
1 = Comparator hysteresis enabled
0 = Comparator hysteresis disabled

bit 0 **CxSYNC:** Comparator Output Synchronous Mode bit
1 = Comparator output to Timer1 and I/O pin is synchronous to changes on Timer1 clock source. Output updated on the falling edge of Timer1 clock source.
0 = Comparator output to Timer1 and I/O pin is asynchronous.

chanhvinh.com



**REGISTER 16-2: CMxCON1: COMPARATOR Cx CONTROL REGISTER 1**

| R/W-0/0 | R/W-0/0 | R/W-0/0 | R/W-0/0 | R/W-0/0 | R/W-0/0 | R/W-0/0 | R/W-0/0 |
|---|---|---|---|---|---|---|---|
| CxINTP | CxINTN | CxPCH<2:0> | | | CxNCH<2:0> | | |
| bit 7 | | | | | | | bit 0 |

| **Legend:** | | |
|---|---|---|
| R = Readable bit | W = Writable bit | U = Unimplemented bit, read as '0' |
| u = Bit is unchanged | x = Bit is unknown | -n/n = Value at POR and BOR/Value at all other Resets |
| '1' = Bit is set | '0' = Bit is cleared | |

bit 7 **CxINTP:** Comparator Interrupt on Positive Going Edge Enable bits
1 = The CxIF interrupt flag will be set upon a positive going edge of the CxOUT bit
0 = No interrupt flag will be set on a positive going edge of the CxOUT bit

bit 6 **CxINTN:** Comparator Interrupt on Negative Going Edge Enable bits
1 = The CxIF interrupt flag will be set upon a negative going edge of the CxOUT bit
0 = No interrupt flag will be set on a negative going edge of the CxOUT bit

bit 5-3 **CxPCH<2:0>:** Comparator Positive Input Channel Select bits
111 = CxVP connects to AGND
110 = CxVP connects to FVR Buffer 2
101 = CxVP connects to VDAC
100 = CxVP unconnected, input floating
011 = CxVP unconnected, input floating
010 = CxVP unconnected, input floating
001 = CxVN unconnected, input floating
000 = CxVP connects to CxIN+ pin

bit 2-0 **CxNCH<2:0>:** Comparator Negative Input Channel Select bits
111 = CxVN connects to AGND
110 = CxVN connects to FVR Buffer 2
101 = CxVN unconnected, input floating
100 = CxVN unconnected, input floating
011 = CxVN connects to CxIN3- pin
010 = CxVN connects to CxIN2- pin
001 = CxVN connects to CxIN1- pin
000 = CxVN connects to CxIN0- pin

 © 2013 Microchip Technology Inc.

chanhvinh.com



**REGISTER 16-3: CMOUT: COMPARATOR OUTPUT REGISTER**

| U-0 | U-0 | U-0 | U-0 | U-0 | U-0 | R-0/0 | R-0/0 |
|---|---|---|---|---|---|---|---|
| — | — | — | — | — | — | MC2OUT | MC1OUT |
| bit 7 | | | | | | | bit 0 |

| **Legend:** | | |
|---|---|---|
| R = Readable bit | W = Writable bit | U = Unimplemented bit, read as '0' |
| u = Bit is unchanged | x = Bit is unknown | -n/n = Value at POR and BOR/Value at all other Resets |
| '1' = Bit is set | '0' = Bit is cleared | |

bit 7-2 **Unimplemented:** Read as '0'

bit 1 **MC2OUT:** Mirror Copy of C2OUT bit

bit 0 **MC1OUT:** Mirror Copy of C1OUT bit

**TABLE 16-3: SUMMARY OF REGISTERS ASSOCIATED WITH COMPARATOR MODULE**

| Name | Bit 7 | Bit 6 | Bit 5 | Bit 4 | Bit 3 | Bit 2 | Bit 1 | Bit 0 | Register on Page |
|---|---|---|---|---|---|---|---|---|---|
| ANSELA | — | — | — | ANSA4 | — | ANSA2 | ANSA1 | ANSA0 | 125 |
| ANSELB(1) | — | — | ANSB5 | ANSB4 | — | — | — | — | 131 |
| ANSELC | ANSC7(1) | ANSC6(1) | ANSC5(2) | ANSC4(2) | ANSC3 | ANSC2 | ANSC1 | ANSC0 | 136 |
| CM1CON0 | C1ON | C1OUT | — | C1POL | C1ZLF | C1SP | C1HYS | C1SYNC | 165 |
| CM2CON0 | C2ON | C2OUT | — | C2POL | C2ZLF | C2SP | C2HYS | C2SYNC | 165 |
| CM1CON1 | C1NTP | C1INTN | C1PCH<2:0> | | | C1NCH<2:0> | | | 166 |
| CM2CON1 | C2NTP | C2INTN | C2PCH<2:0> | | | C2NCH<2:0> | | | 166 |
| CMOUT | — | — | — | — | — | — | MC2OUT | MC1OUT | 167 |
| FVRCON | FVREN | FVRRDY | TSEN | TSRNG | CDAFVR<1:0> | | ADFVR<1:0> | | 155 |
| DAC1CON0 | DAC1EN | — | DAC1OE1 | DAC1OE2 | DAC1PSS<1:0> | | — | DAC1NSS | 244 |
| DAC1CON1 | DAC1R<7:0> | | | | | | | | 244 |
| INTCON | GIE | PEIE | TMR0IE | INTE | IOCIE | TMR0IF | INTF | IOCIF | 86 |
| PIE2 | OSFIE | C2IE | C1IE | — | BCL1IE | TMR6IE | TMR4IE | CCP2IE | 88 |
| PIR2 | OSFIF | C2IF | C1IF | — | BCL1IF | TMR6IF | TMR4IF | CCP2IF | 91 |
| TRISA | — | — | TRISA5 | TRISA4 | —(3) | TRISA2 | TRISA1 | TRISA0 | 124 |
| TRISB(1) | TRISB7 | TRISB6 | TRISB5 | TRISB4 | — | — | — | — | 130 |
| TRISC | TRISC7(1) | TRISC6(1) | TRISC5 | TRISC4 | TRISC3 | TRISC2 | TRISC1 | TRISC0 | 135 |

**Legend:** — = unimplemented location, read as '0'. Shaded cells are unused by the comparator module.

**Note 1:** PIC16(L)F1708 only.

**2:** PIC16(L)F1704 only.

**3:** Unimplemented, read as '1'.

chanhvinh.com



**NOTES:**

chanhvinh.com

 © 2013 Microchip Technology Inc.

chanhvinh.com



## 17.0 PULSE WIDTH MODULATION (PWM)

The PWM module generates a Pulse-Width Modulated signal determined by the duty cycle, period, and resolution that are configured by the following registers:

- PR2
- T2CON
- PWMxDCH
- PWMxDCL
- PWMxCON

Figure 17-1 shows a simplified block diagram of PWM operation.

Figure 17-2 shows a typical waveform of the PWM signal.

**FIGURE 17-1: SIMPLIFIED PWM BLOCK DIAGRAM**

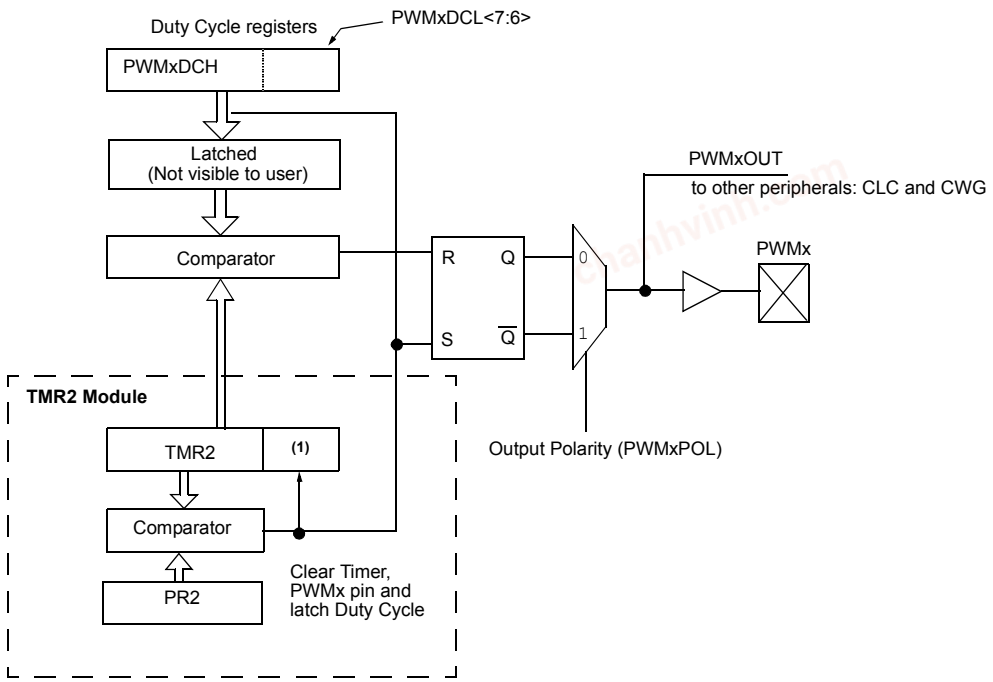


**Note 1:** 8-bit timer is concatenated with the two Least Significant bits of 1/FOSC adjusted by the Timer2 prescaler to create a 10-bit time base.

For a step-by-step procedure on how to set up this module for PWM operation, refer to **Section 17.1.9 "Setup for PWM Operation using PWMx Pins"**.

**FIGURE 17-2: PWM OUTPUT**

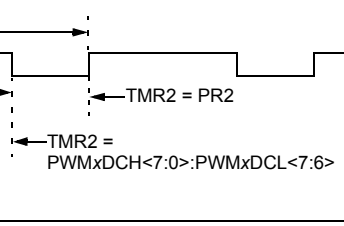

chanhvinh.com



## 17.1 PWMx Pin Configuration

All PWM outputs are multiplexed with the PORT data latch. The user must configure the pins as outputs by clearing the associated TRIS bits.

### 17.1.1 FUNDAMENTAL OPERATION

The PWM module produces a 10-bit resolution output. Timer2 and PR2 set the period of the PWM. The PWMxDCL and PWMxDCH registers configure the duty cycle. The period is common to all PWM modules, whereas the duty cycle is independently controlled.

**Note:** The Timer2 postscaler is not used in the determination of the PWM frequency. The postscaler could be used to have a servo update rate at a different frequency than the PWM output.

All PWM outputs associated with Timer2 are set when TMR2 is cleared. Each PWMx is cleared when TMR2 is equal to the value specified in the corresponding PWMxDCH (8 MSb) and PWMxDCL<7:6> (2 LSb) registers. When the value is greater than or equal to PR2, the PWM output is never cleared (100% duty cycle).

**Note:** The PWMxDCH and PWMxDCL registers are double buffered. The buffers are updated when Timer2 matches PR2. Care should be taken to update both registers before the timer match occurs.

### 17.1.2 PWM OUTPUT POLARITY

The output polarity is inverted by setting the PWMxPOL bit of the PWMxCON register.

### 17.1.3 PWM PERIOD

The PWM period is specified by the PR2 register of Timer2. The PWM period can be calculated using the formula of Equation 17-1.

**EQUATION 17-1: PWM PERIOD**

$$PWM\ Period = [(PR2) + 1] \bullet 4 \bullet TOSC \bullet (TMR2\ Prescale\ Value)$$

**Note:** TOSC = 1/FOSC

When TMR2 is equal to PR2, the following three events occur on the next increment cycle:

- TMR2 is cleared
- The PWM output is active. (Exception: When the PWM duty cycle = 0%, the PWM output will remain inactive.)
- The PWMxDCH and PWMxDCL register values are latched into the buffers.

**Note:** The Timer2 postscaler has no effect on the PWM operation.

### 17.1.4 PWM DUTY CYCLE

The PWM duty cycle is specified by writing a 10-bit value to the PWMxDCH and PWMxDCL register pair. The PWMxDCH register contains the eight MSbs and the PWMxDCL<7:6>, the two LSbs. The PWMxDCH and PWMxDCL registers can be written to at any time.

Equation 17-2 is used to calculate the PWM pulse width.

Equation 17-3 is used to calculate the PWM duty cycle ratio.

**EQUATION 17-2: PULSE WIDTH**

$$Pulse\ Width = (PWMxDCH:PWMxDCL<7:6>) \bullet TOSC \bullet (TMR2\ Prescale\ Value)$$

**Note:** TOSC = 1/FOSC

**EQUATION 17-3: DUTY CYCLE RATIO**

$$Duty\ Cycle\ Ratio = \frac{(PWMxDCH:PWMxDCL<7:6>)}{4(PR2 + 1)}$$

The 8-bit timer TMR2 register is concatenated with the two Least Significant bits of 1/FOSC, adjusted by the Timer2 prescaler to create the 10-bit time base. The system clock is used if the Timer2 prescaler is set to 1:1.

 © 2013 Microchip Technology Inc.

chanhvinh.com



### 17.1.5 PWM RESOLUTION

The resolution determines the number of available duty cycles for a given period. For example, a 10-bit resolution will result in 1024 discrete duty cycles, whereas an 8-bit resolution will result in 256 discrete duty cycles.

The maximum PWM resolution is 10 bits when PR2 is 255. The resolution is a function of the PR2 register value as shown by Equation 17-4.

**EQUATION 17-4: PWM RESOLUTION**

$$Resolution = \frac{log[4(PR2 + 1)]}{log(2)} \ bits$$

| Note: | If the pulse width value is greater than the period the assigned PWM pin(s) will remain unchanged. |
|---|---|

**TABLE 17-1: EXAMPLE PWM FREQUENCIES AND RESOLUTIONS (Fosc = 20 MHz)**

| PWM Frequency | 0.31 kHz | 4.88 kHz | 19.53 kHz | 78.12 kHz | 156.3 kHz | 208.3 kHz |
|---|---|---|---|---|---|---|
| Timer Prescale | 64 | 4 | 1 | 1 | 1 | 1 |
| PR2 Value | 0xFF | 0xFF | 0xFF | 0x3F | 0x1F | 0x17 |
| Maximum Resolution (bits) | 10 | 10 | 10 | 8 | 7 | 6.6 |

**TABLE 17-2: EXAMPLE PWM FREQUENCIES AND RESOLUTIONS (Fosc = 8 MHz)**

| PWM Frequency | 0.31 kHz | 4.90 kHz | 19.61 kHz | 76.92 kHz | 153.85 kHz | 200.0 kHz |
|---|---|---|---|---|---|---|
| Timer Prescale | 64 | 4 | 1 | 1 | 1 | 1 |
| PR2 Value | 0x65 | 0x65 | 0x65 | 0x19 | 0x0C | 0x09 |
| Maximum Resolution (bits) | 8 | 8 | 8 | 6 | 5 | 5 |

### 17.1.6 OPERATION IN SLEEP MODE

In Sleep mode, the TMR2 register will not increment and the state of the module will not change. If the PWMx pin is driving a value, it will continue to drive that value. When the device wakes up, TMR2 will continue from its previous state.

### 17.1.7 CHANGES IN SYSTEM CLOCK FREQUENCY

The PWM frequency is derived from the system clock frequency (Fosc). Any changes in the system clock frequency will result in changes to the PWM frequency. Refer to **Section 6.0 "Oscillator Module (with Fail-Safe Clock Monitor)"** for additional details.

### 17.1.8 EFFECTS OF RESET

Any Reset will force all ports to Input mode and the PWM registers to their Reset states.

chanhvinh.com



### 17.1.9 SETUP FOR PWM OPERATION USING PWMx PINS

The following steps should be taken when configuring the module for PWM operation using the PWMx pins:

1. Disable the PWMx pin output driver(s) by setting the associated TRIS bit(s).
2. Clear the PWMxCON register.
3. Load the PR2 register with the PWM period value.
4. Load the PWMxDCH register and bits <7:6> of the PWMxDCL register with the PWM duty cycle value.
5. Configure and start Timer2:
   - Clear the TMR2IF interrupt flag bit of the PIR1 register. See Note below.
   - Configure the T2CKPS bits of the T2CON register with the Timer2 prescale value.
   - Enable Timer2 by setting the TMR2ON bit of the T2CON register.
6. Enable PWM output pin and wait until Timer2 overflows, TMR2IF bit of the PIR1 register is set. See Note below.
7. Enable the PWMx pin output driver(s) by clearing the associated TRIS bit(s) and setting the desired pin PPS control bits.
8. Configure the PWM module by loading the PWMxCON register with the appropriate values.

**Note 1:** In order to send a complete duty cycle and period on the first PWM output, the above steps must be followed in the order given. If it is not critical to start with a complete PWM signal, then move Step 8 to replace Step 4.

**2:** For operation with other peripherals only, disable PWMx pin outputs.

### 17.1.10 SETUP FOR PWM OPERATION TO OTHER DEVICE PERIPHERALS

The following steps should be taken when configuring the module for PWM operation to be used by other device peripherals:

1. Disable the PWMx pin output driver(s) by setting the associated TRIS bit(s).
2. Clear the PWMxCON register.
3. Load the PR2 register with the PWM period value.
4. Load the PWMxDCH register and bits <7:6> of the PWMxDCL register with the PWM duty cycle value.
5. Configure and start Timer2:
   - Clear the TMR2IF interrupt flag bit of the PIR1 register. See Note below.
   - Configure the T2CKPS bits of the T2CON register with the Timer2 prescale value.
   - Enable Timer2 by setting the TMR2ON bit of the T2CON register.
6. Enable PWM output pin:
   - Wait until Timer2 overflows, TMR2IF bit of the PIR1 register is set. See Note below.
7. Configure the PWM module by loading the PWMxCON register with the appropriate values.

**Note:** In order to send a complete duty cycle and period on the first PWM output, the above steps must be included in the setup sequence. If it is not critical to start with a complete PWM signal on the first output, then step 6 may be ignored.

 © 2013 Microchip Technology Inc.

chanhvinh.com



## 17.2 Register Definitions: PWM Control

**REGISTER 17-1: PWMxCON: PWM CONTROL REGISTER**

| R/W-0/0 | U-0 | R-0/0 | R/W-0/0 | U-0 | U-0 | U-0 | U-0 |
|---|---|---|---|---|---|---|---|
| PWMxEN | — | PWMxOUT | PWMxPOL | — | — | — | — |
| bit 7 | | | | | | | bit 0 |

| **Legend:** | | |
|---|---|---|
| R = Readable bit | W = Writable bit | U = Unimplemented bit, read as ‘0’ |
| u = Bit is unchanged | x = Bit is unknown | -n/n = Value at POR and BOR/Value at all other Resets |
| ‘1’ = Bit is set | ‘0’ = Bit is cleared | |

bit 7 **PWMxEN:** PWM Module Enable bit
1 = PWM module is enabled
0 = PWM module is disabled

bit 6 **Unimplemented:** Read as ‘0’

bit 5 **PWMxOUT:** PWM module output level when bit is read.

bit 4 **PWMxPOL:** PWMx Output Polarity Select bit
1 = PWM output is active low.
0 = PWM output is active high.

bit 3-0 **Unimplemented:** Read as ‘0’

chanhvinh.com



### REGISTER 17-2: PWMxDCH: PWM DUTY CYCLE HIGH BITS

| R/W-x/u | R/W-x/u | R/W-x/u | R/W-x/u | R/W-x/u | R/W-x/u | R/W-x/u | R/W-x/u |
|---|---|---|---|---|---|---|---|
| PWMxDCH<7:0> | | | | | | | |
| bit 7 | | | | | | | bit 0 |

| Legend: | | |
|---|---|---|
| R = Readable bit | W = Writable bit | U = Unimplemented bit, read as '0' |
| u = Bit is unchanged | x = Bit is unknown | -n/n = Value at POR and BOR/Value at all other Resets |
| '1' = Bit is set | '0' = Bit is cleared | |

bit 7-0 **PWMxDCH<7:0>:** PWM Duty Cycle Most Significant bits
These bits are the MSbs of the PWM duty cycle. The two LSbs are found in PWMxDCL Register.

### REGISTER 17-3: PWMxDCL: PWM DUTY CYCLE LOW BITS

| R/W-x/u | R/W-x/u | U-0 | U-0 | U-0 | U-0 | U-0 | U-0 |
|---|---|---|---|---|---|---|---|
| PWMxDCL<7:6> | | — | — | — | — | — | — |
| bit 7 | | | | | | | bit 0 |

| Legend: | | |
|---|---|---|
| R = Readable bit | W = Writable bit | U = Unimplemented bit, read as '0' |
| u = Bit is unchanged | x = Bit is unknown | -n/n = Value at POR and BOR/Value at all other Resets |
| '1' = Bit is set | '0' = Bit is cleared | |

bit 7-6 **PWMxDCL<7:6>:** PWM Duty Cycle Least Significant bits
These bits are the LSbs of the PWM duty cycle. The MSbs are found in PWMxDCH Register.

bit 5-0 **Unimplemented:** Read as '0'

### TABLE 17-3: SUMMARY OF REGISTERS ASSOCIATED WITH PWM

| Name | Bit 7 | Bit 6 | Bit 5 | Bit 4 | Bit 3 | Bit 2 | Bit 1 | Bit 0 | Register on Page |
|---|---|---|---|---|---|---|---|---|---|
| CCPTMRS | P4TSEL<1:0> | | P3TSEL<1:0> | | C2TSEL<1:0> | | C1TSEL<1:0> | | 269 |
| PR2 | Timer2 module Period Register | | | | | | | | 265 |
| PWM3CON | PWM3EN | PWM3OE | PWM3OUT | PWM3POL | — | — | — | — | 173 |
| PWM3DCH | PWM3DCH<7:0> | | | | | | | | 174 |
| PWM3DCL | PWM3DCL<7:6> | | — | — | — | — | — | — | 174 |
| PWM4CON | PWM4EN | PWM4OE | PWM4OUT | PWM4POL | — | — | — | — | 173 |
| PWM4DCH | PWM4DCH<7:0> | | | | | | | | 174 |
| PWM4DCL | PWM4DCL<7:6> | | — | — | — | — | — | — | 174 |
| RxyPPS | — | — | — | RxyPPS<4:0> | | | | | 143 |
| T2CON | — | TOUTPS3 | TOUTPS2 | TOUTPS1 | TOUTPS0 | TMR2ON | T2CKPS1 | T2CKPS0 | 267 |
| TMR2 | Timer2 module Register | | | | | | | | 265 |

**Legend:** – = Unimplemented locations, read as '0', u = unchanged, x = unknown. Shaded cells are not used by the PWM.

 © 2013 Microchip Technology Inc.

chanhvinh.com



## 18.0 COMPLEMENTARY OUTPUT GENERATOR (COG) MODULE

The primary purpose of the Complementary Output Generator (COG) is to convert a single output PWM signal into a two output complementary PWM signal. The COG can also convert two separate input events into a single or complementary PWM output.

The COG PWM frequency and duty cycle are determined by a rising event input and a falling event input. The rising event and falling event may be the same source. Sources may be synchronous or asynchronous to the COG_clock.

The rate at which the rising event occurs determines the PWM frequency. The time from the rising event input to the falling event input determines the duty cycle.

A selectable clock input is used to generate the phase delay, blanking, and dead-band times. Dead-band time can also be generated with a programmable time delay, which is independent from all clock sources.

Simplified block diagrams of the various COG modes are shown in Figure 18-2 through Figure 18-6.

The COG module has the following features:

- Six modes of operation:
  - Steered PWM mode
  - Synchronous Steered PWM mode
  - Forward Full-Bridge mode
  - Reverse Full-Bridge mode
  - Half-Bridge mode
  - Push-Pull mode
- Selectable COG_clock clock source
- Independently selectable rising event sources
- Independently selectable falling event sources
- Independently selectable edge or level event sensitivity
- Independent output polarity selection
- Phase delay with independent rising and falling delay times
- Dead-band control with:
  - independent rising and falling event dead-band times
  - Synchronous and asynchronous timing
- Blanking control with independent rising and falling event blanking times
- Auto-shutdown control with:
  - Independently selectable shutdown sources
  - Auto-restart enable
  - Auto-shutdown pin override control (high, low, off, and Hi-Z)

### 18.1 Fundamental Operation

#### 18.1.1 STEERING (ALL MODES)

The active COG data can be independently steered to four outputs. Outputs are selected by setting the GxSTRA through GxSTRD bits of the GxSTR register (Register 18-9). Depending on the mode, the signal on the output will be the primary PWM signal, the complement of the primary signal, or a static level. When the steering bits are cleared then the output data is the static level determined by the GxSDATA through GxSDATD bits of the GxSTR register.

#### 18.1.2 STEERED PWM MODES

In steered PWM mode, the PWM signal derived from the input event sources is output as a single phase PWM which can be steered to any combination of the four COG outputs. Output steering takes effect on the instruction cycle following the write to the GxSTR register.

Synchronous steered PWM mode is identical to the steered PWM mode except that changes to the output steering take effect on the first rising event after the GxSTR register write. Static output data is not synchronized.

Steering mode configurations are shown in Figure 18-2 and Figure 18-3.

Steered PWM and synchronous steered PWM modes are selected by setting the GxMD bits of the COGxCON0 register (Register 18-1) to '000' and '001' respectively.

#### 18.1.3 FULL-BRIDGE MODES

In both Forward and Reverse Full-Bridge modes, two of the four COG outputs are active and the other two are inactive. Of the two active outputs, one is modulated by the PWM input signal and the other is on at 100% duty cycle. When the direction is changed, the dead-band time is inserted to delay the modulated output. This gives the unmodulated driver time to shut down, thereby, preventing shoot-through current in the series connected power devices.

In Forward Full-Bridge mode, the PWM input modulates the COGxD output and drives the COGA output at 100%.

In Reverse Full-Bridge mode, the PWM input modulates the COGxB output and drives the COGxC output at 100%.

The full-bridge configuration is shown in Figure 18-4. Typical full-bridge waveforms are shown in Figure 18-12 and Figure 18-13.

Full-Bridge Forward and Full-Bridge Reverse modes are selected by setting the GxMD bits of the COGxCON0 register to '010' and '011', respectively.

chanhvinh.com



**FIGURE 18-1: EXAMPLE OF FULL-BRIDGE APPLICATION**

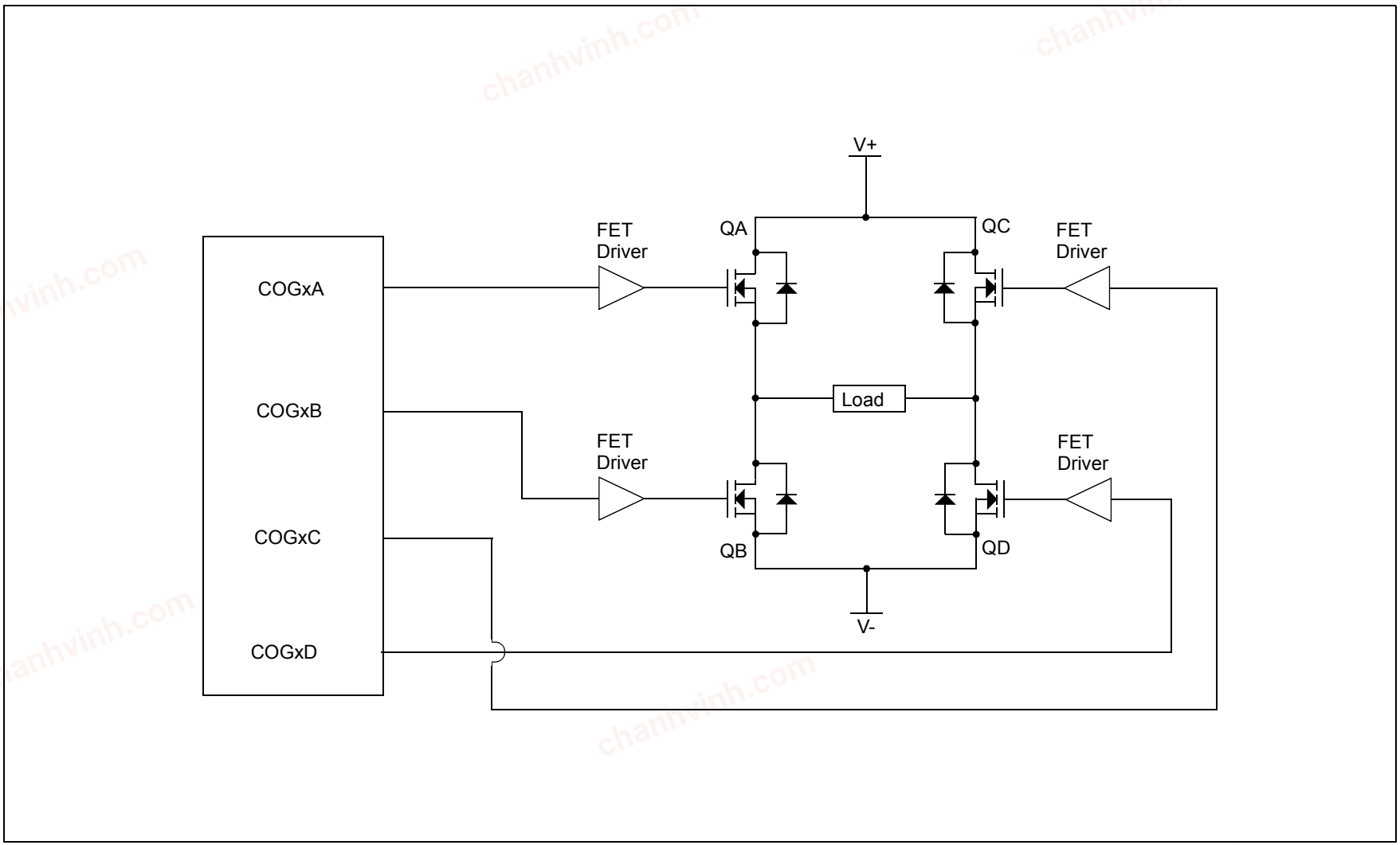




Preliminary

© 2013 Microchip Technology Inc.

chanhvinh.com



### 18.1.4 HALF-BRIDGE MODE

In half-bridge mode, the COG generates a two output complementary PWM waveform from rising and falling event sources. In the simplest configuration, the rising and falling event sources are the same signal, which is a PWM signal with the desired period and duty cycle. The COG converts this single PWM input into a dual complementary PWM output. The frequency and duty cycle of the dual PWM output match those of the single input PWM signal. The off-to-on transition of each output can be delayed from the on-to-off transition of the other output, thereby, creating a time immediately after the PWM transition where neither output is driven. This is referred to as dead time and is covered in **Section 18.5 "Dead-Band Control"**.

A typical operating waveform, with dead-band, generated from a single CCP1 input is shown in Figure 18-9.

The primary output can be steered to either or both COGxA and COGxC. The complementary output can be steered to either or both COGxB and COGxD.

Half-Bridge mode is selected by setting the GxMD bits of the COGxCON0 register to '100'.

### 18.1.5 PUSH-PULL MODE

In Push-Pull mode, the COG generates a single PWM output that alternates, every PWM period, between the two pairs of the COG outputs. COGxA has the same signal as COGxC. COGxB has the same signal as COGxD. The output drive activates with the rising input event and terminates with the falling event input. Each rising event starts a new period and causes the output to switch to the COG pair not used in the previous period.

The push-pull configuration is shown in Figure 18-6. A typical push-pull waveform generated from a single CCP1 input is shown in Figure 18-11.

Push-Pull mode is selected by setting the GxMD bits of the COGxCON0 register to '101'.

### 18.1.6 EVENT DRIVEN PWM (ALL MODES)

Besides generating PWM and complementary outputs from a single PWM input, the COG can also generate PWM waveforms from a periodic rising event and a separate falling event. In this case, the falling event is usually derived from analog feedback within the external PWM driver circuit. In this configuration, high power switching transients may trigger a false falling event that needs to be blanked out. The COG can be configured to blank falling (and rising) event inputs for a period of time immediately following the rising (and falling) event drive output. This is referred to as input blanking and is covered in **Section 18.6 "Blanking Control"**.

It may be necessary to guard against the possibility of circuit faults. In this case, the active drive must be terminated before the Fault condition causes damage. This is referred to as auto-shutdown and is covered in **Section 18.8 "Auto-shutdown Control"**.

The COG can be configured to operate in phase delayed conjunction with another PWM. The active drive cycle is delayed from the rising event by a phase delay timer. Phase delay is covered in more detail in **Section 18.7 "Phase Delay"**.

A typical operating waveform, with phase delay and dead-band, generated from a single CCP1 input is shown in Figure 18-10.

chanhvinh.com



**FIGURE 18-2: SIMPLIFIED COG BLOCK DIAGRAM (STEERED PWM MODE, GXMD = 0)**

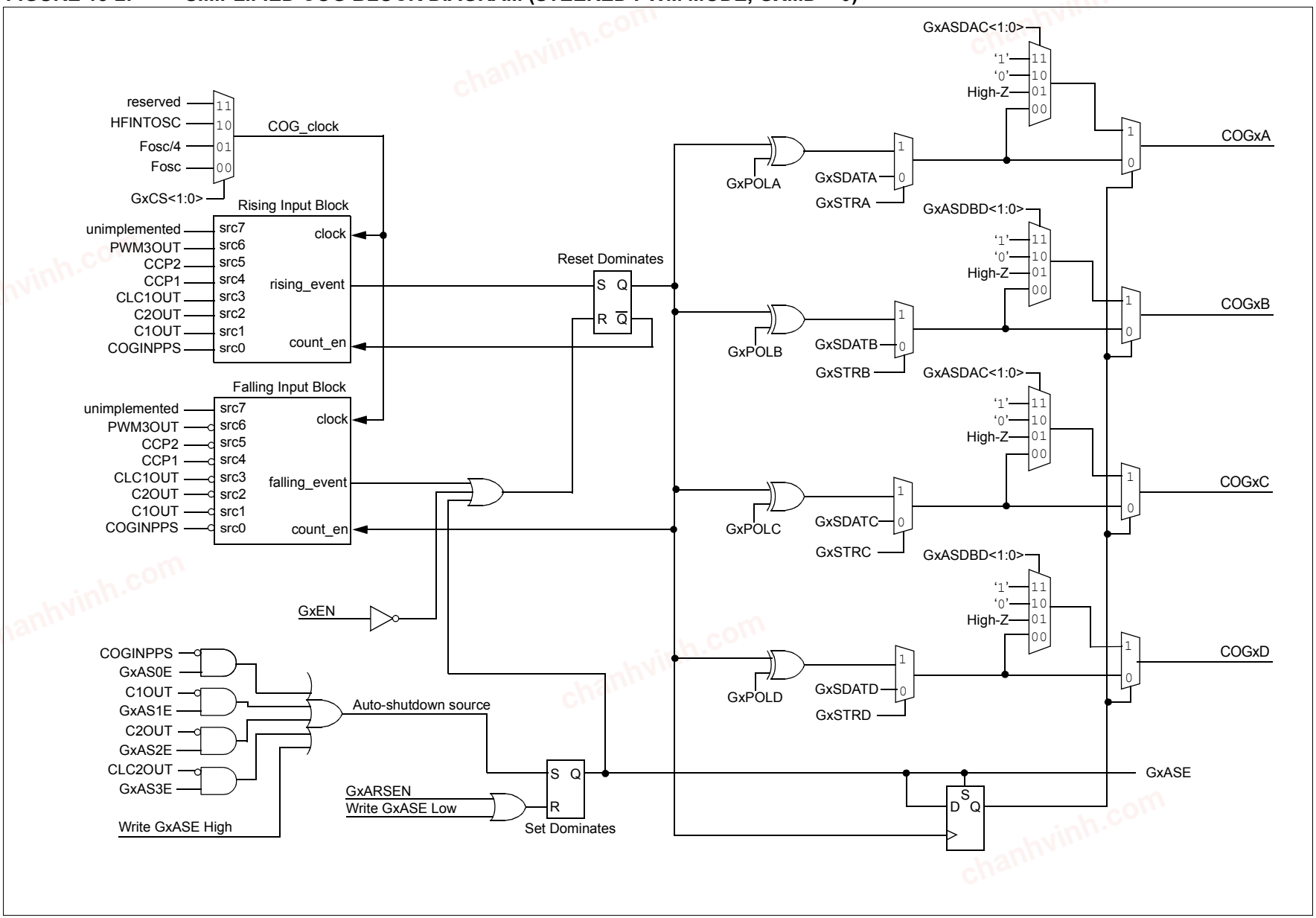




Preliminary

© 2013 Microchip Technology Inc.

chanhvinh.com

**FIGURE 18-3: SIMPLIFIED COG BLOCK DIAGRAM (SYNCHRONOUS STEERED PWM MODE, GXMD = 1)**

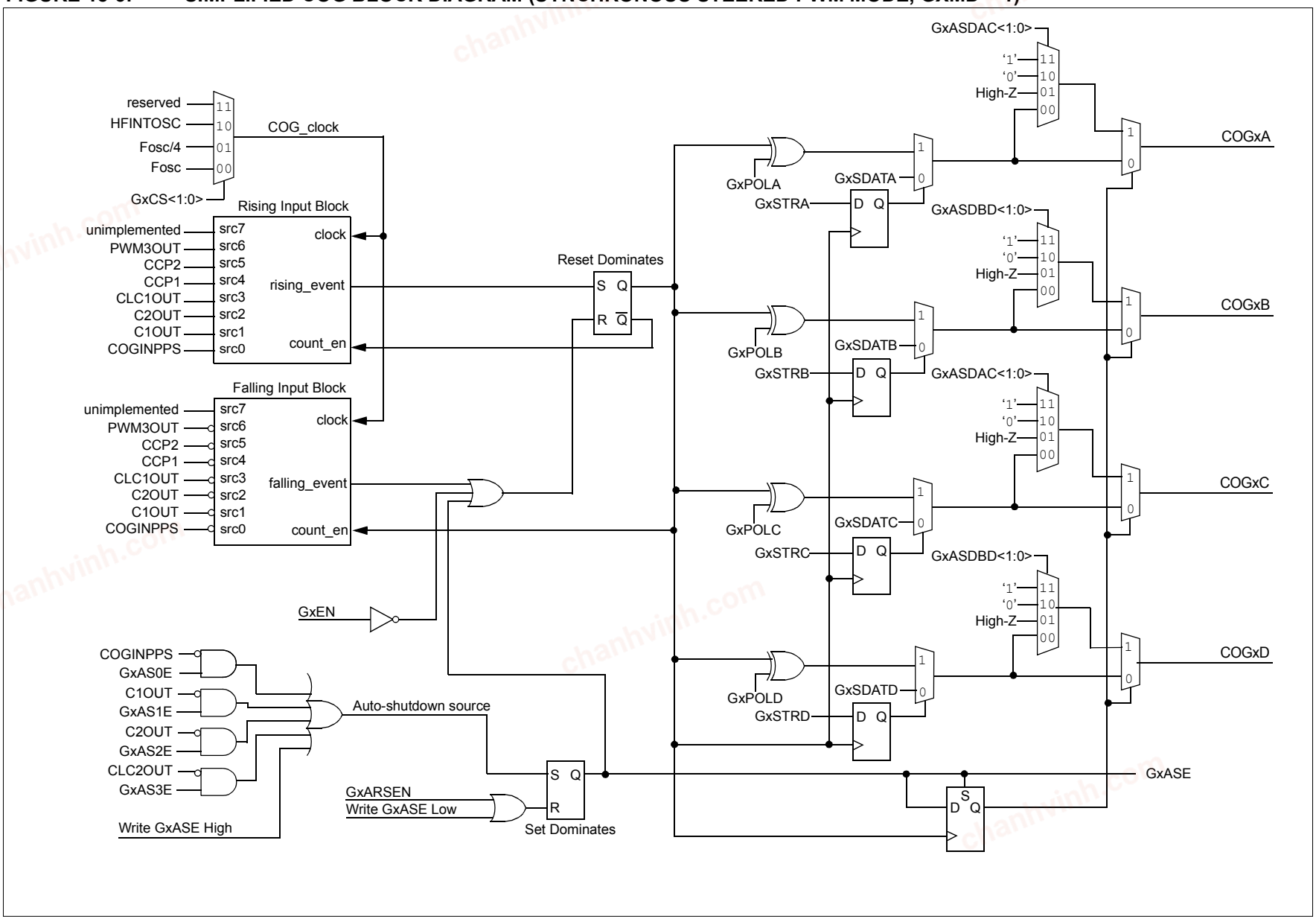

chanhvinh.com



**FIGURE 18-4: SIMPLIFIED COG BLOCK DIAGRAM (FULL-BRIDGE MODES, FORWARD: GXMD = 2, REVERSE: GXMD = 3)**

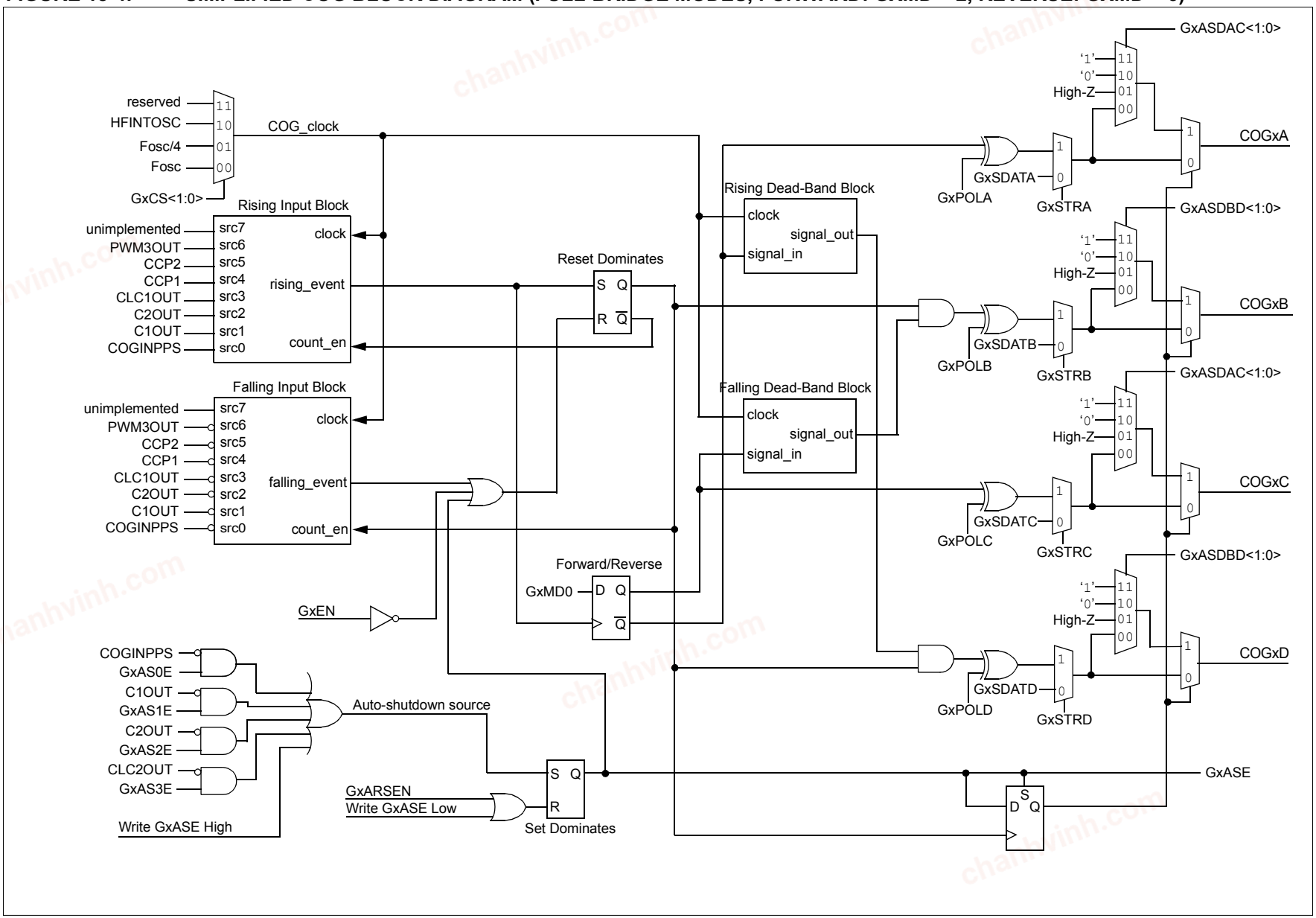




Preliminary

© 2013 Microchip Technology Inc.

chanhvinh.com

**FIGURE 18-5: SIMPLIFIED COG BLOCK DIAGRAM (HALF-BRIDGE MODE, GXMD = 4)**

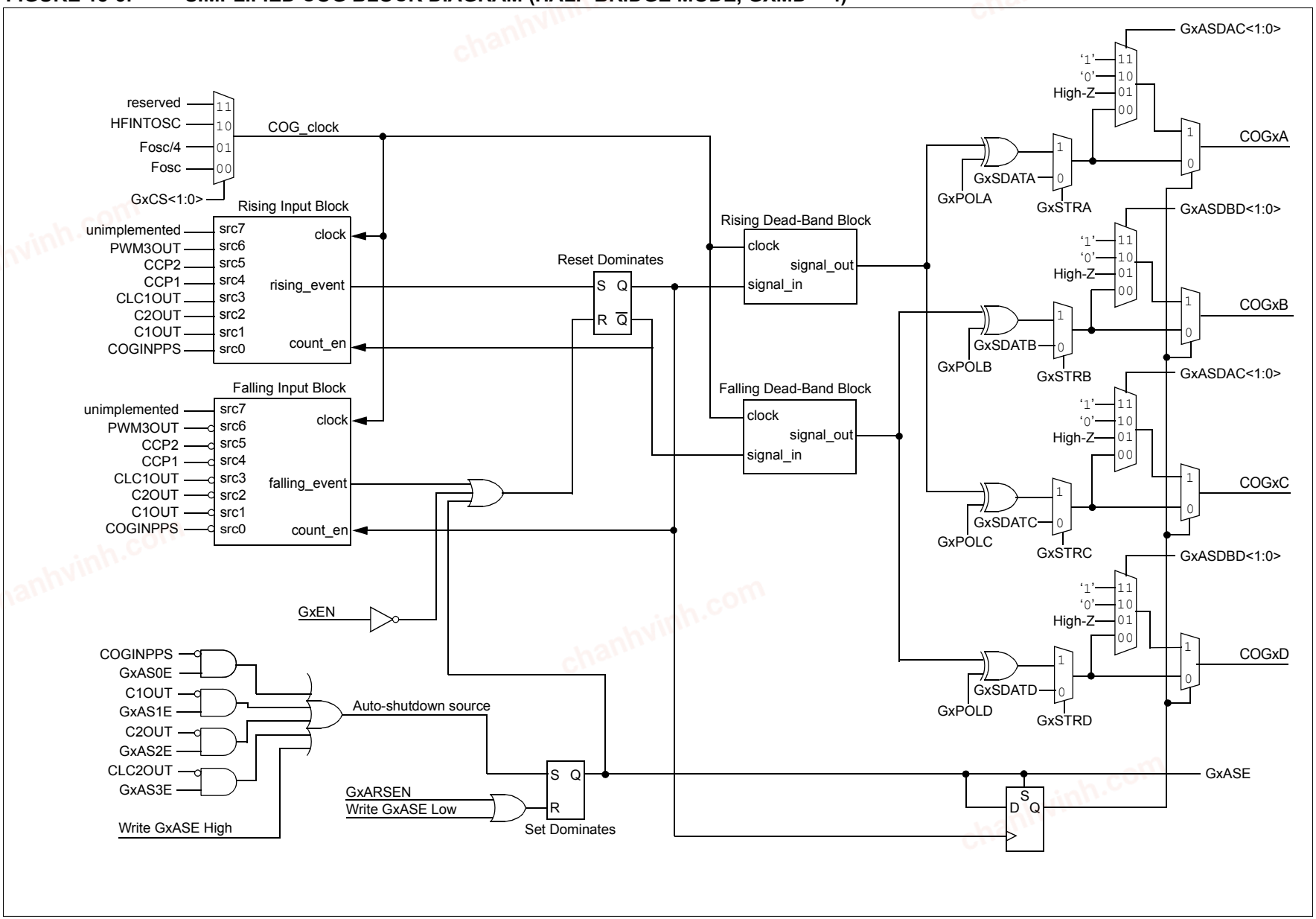

chanhvinh.com



**FIGURE 18-6: SIMPLIFIED COG BLOCK DIAGRAM (PUSH-PULL MODE, GXMD = 5)**

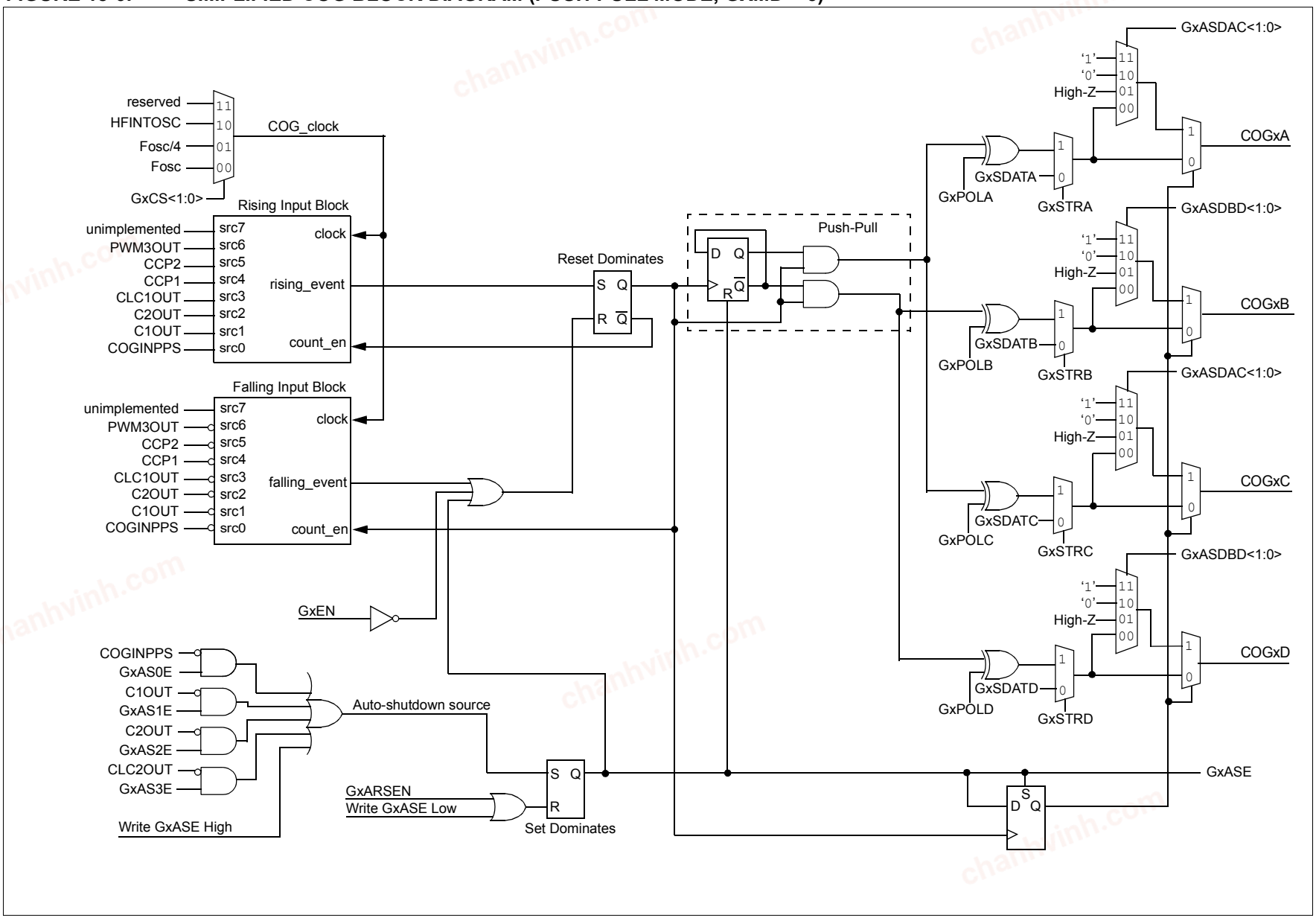




Preliminary

© 2013 Microchip Technology Inc.

chanhvinh.com

**FIGURE 18-7: COG (RISING/FALLING) INPUT BLOCK**

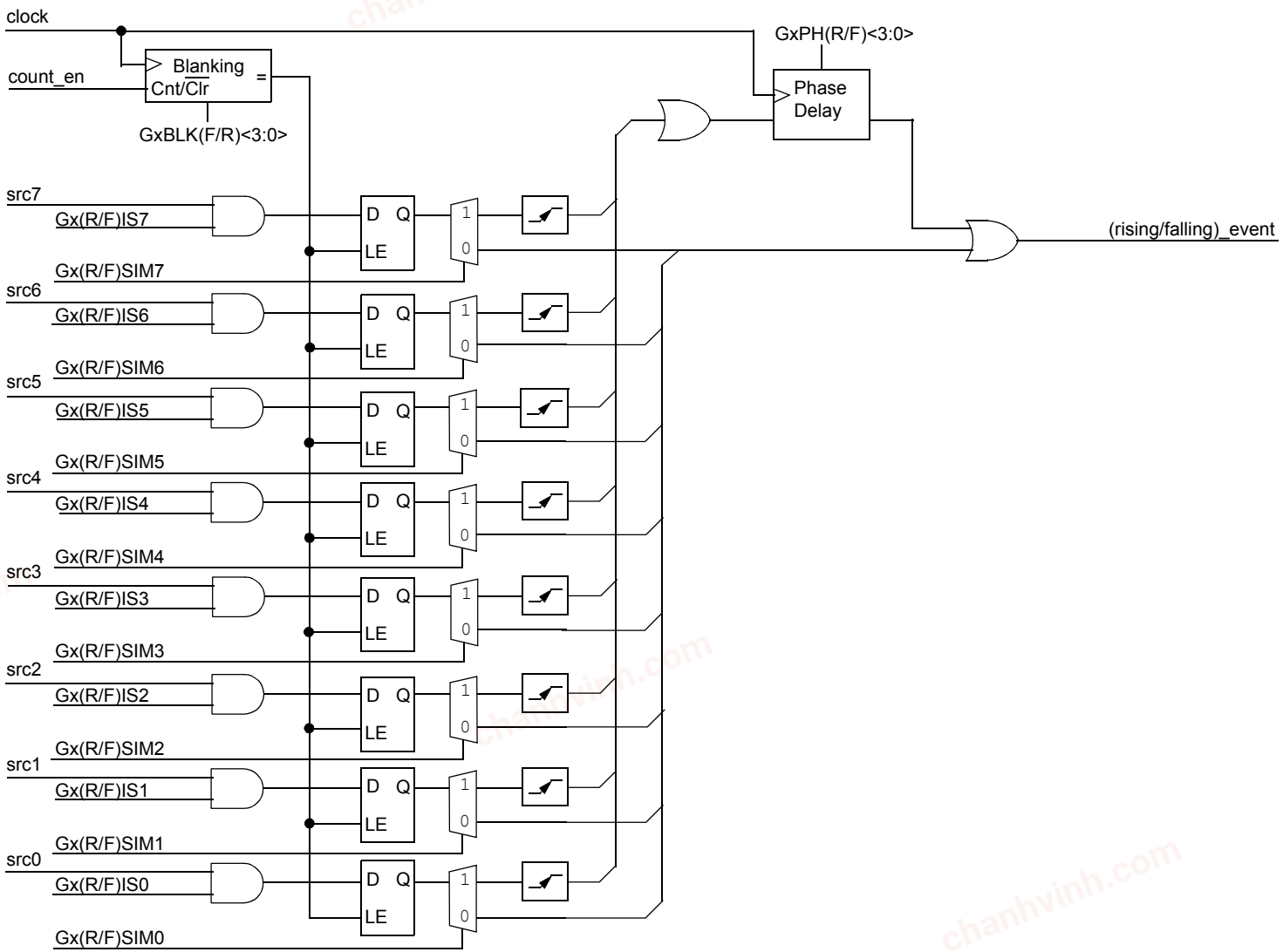

chanhvinh.com



**FIGURE 18-8: COG (RISING/FALLING) DEAD-BAND BLOCK**

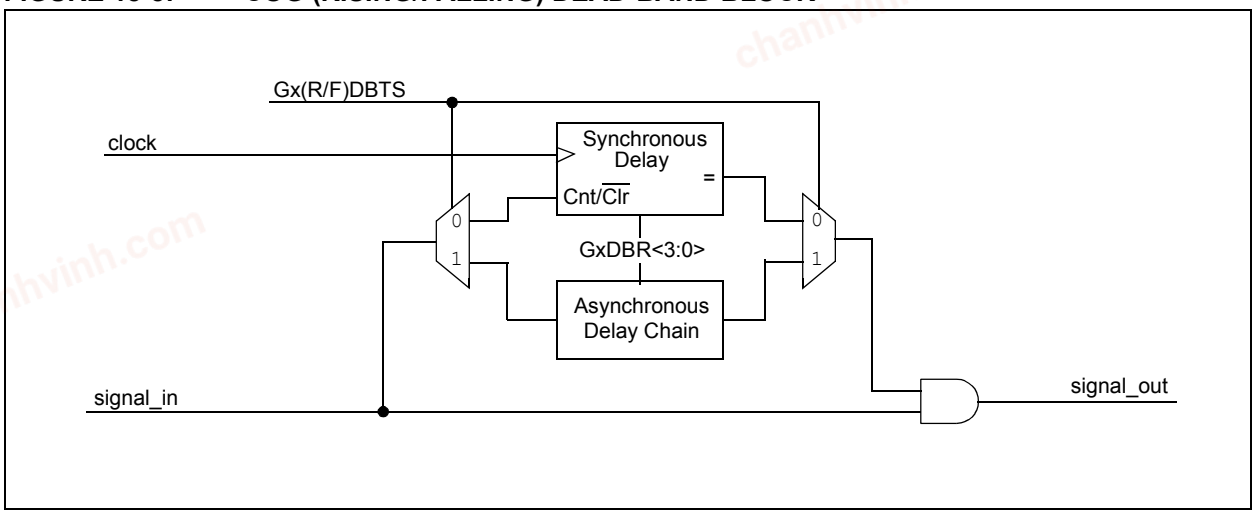



© 2013 Microchip Technology Inc.

chanhvinh.com



**FIGURE 18-9: TYPICAL HALF-BRIDGE MODE COG OPERATION WITH CCP1**

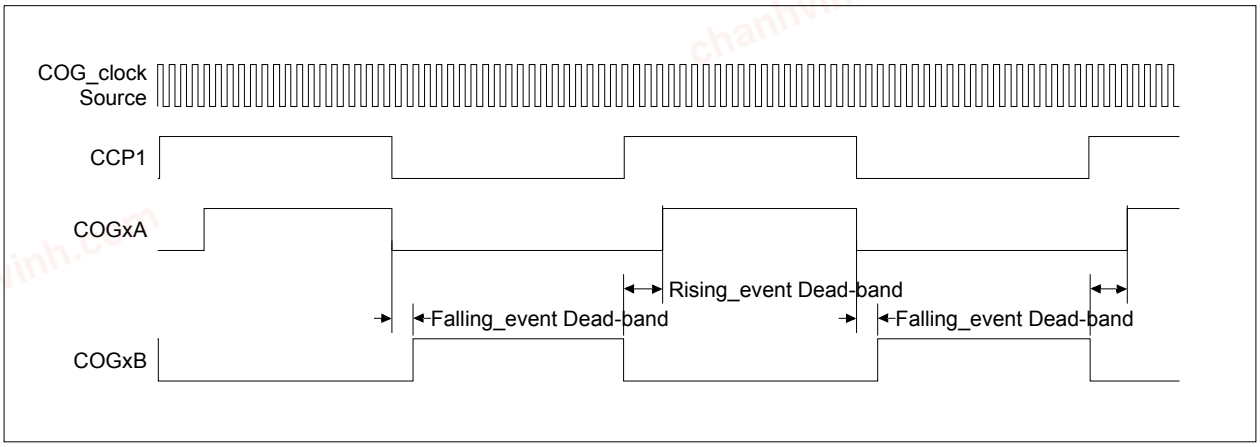


**FIGURE 18-10: HALF-BRIDGE MODE COG OPERATION WITH CCP1 AND PHASE DELAY**

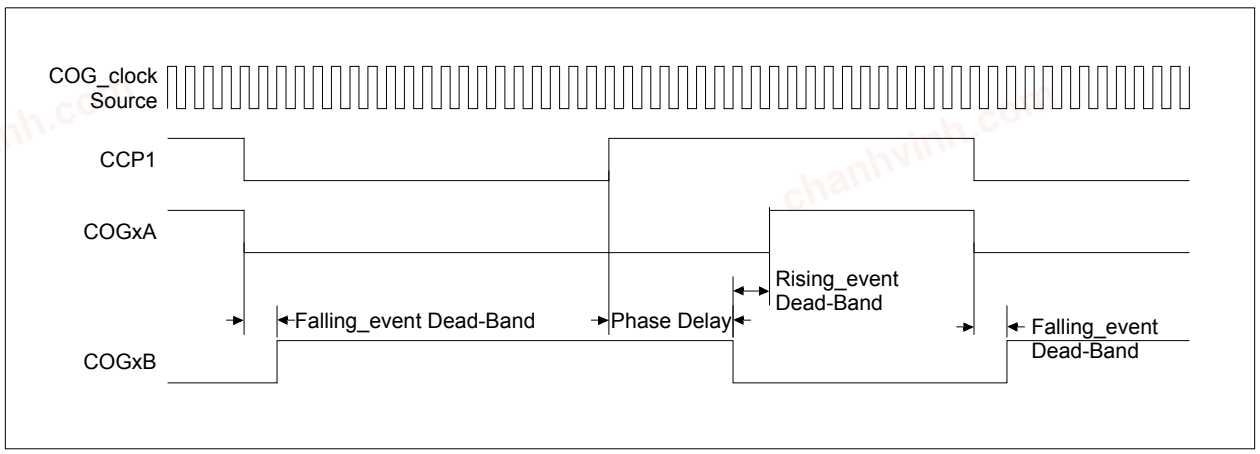


**FIGURE 18-11: PUSH-PULL MODE COG OPERATION WITH CCP1**

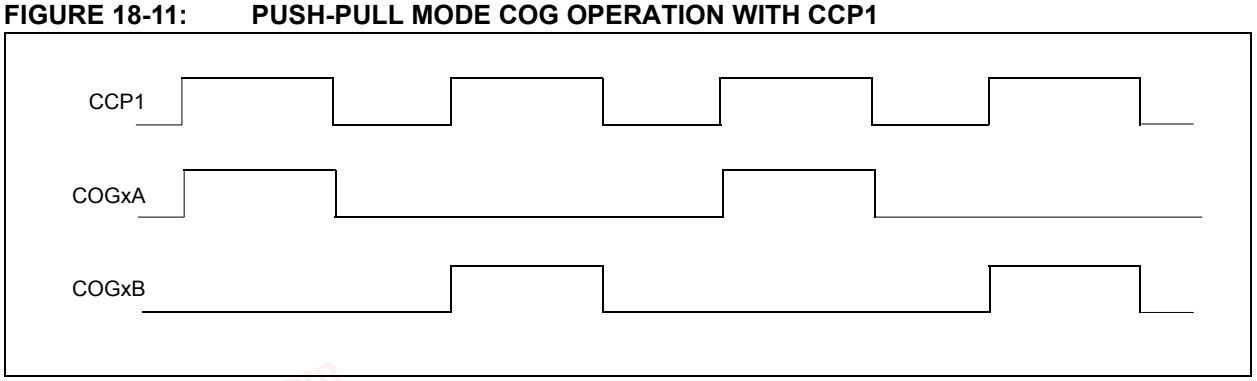

chanhvinh.com



**FIGURE 18-12: FULL-BRIDGE FORWARD MODE COG OPERATION WITH CCP1**

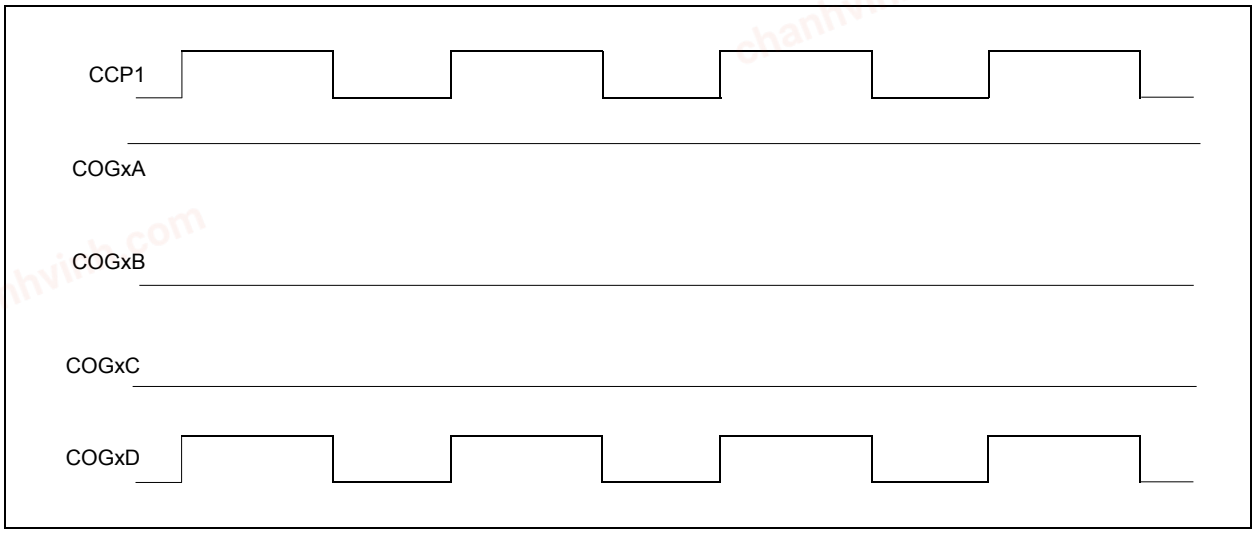


**FIGURE 18-13: FULL-BRIDGE MODE COG OPERATION WITH CCP1 AND DIRECTION CHANGE**

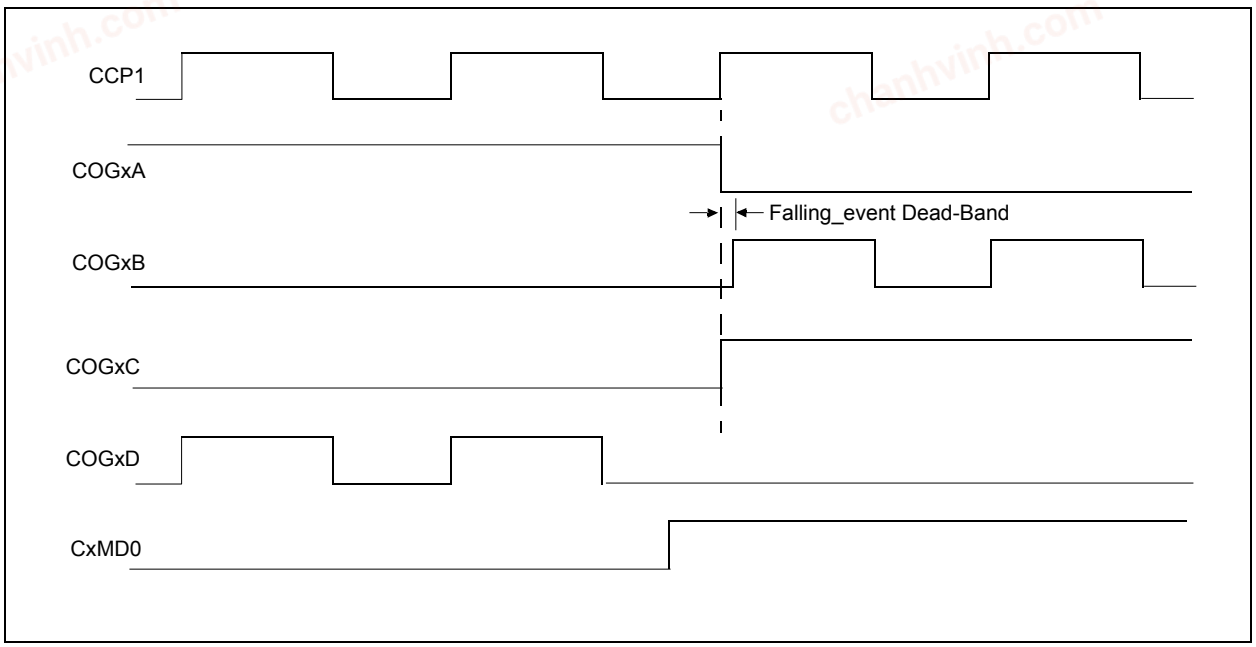



© 2013 Microchip Technology Inc.

chanhvinh.com



## 18.2 Clock Sources

The COG_clock is used as the reference clock to the various timers in the peripheral. Timers that use the COG_clock include:

- Rising and falling dead-band time
- Rising and falling blanking time
- Rising and falling event phase delay

Clock sources available for selection include:

- 8 MHz HFINTOSC (active during Sleep)
- Instruction clock (FOSC/4)
- System clock (FOSC)

The clock source is selected with the GxCS<1:0> bits of the COGxCON0 register (Register 18-1).

## 18.3 Selectable Event Sources

The COG uses any combination of independently selectable event sources to generate the complementary waveform. Sources fall into two categories:

- Rising event sources
- Falling event sources

The rising event sources are selected by setting bits in the COGxRIS register (Register 18-3). The falling event sources are selected by setting bits in the COGxFIS register (Register 18-5). All selected sources are 'OR'd together to generate the corresponding event signal. Refer to Figure 18-7.

### 18.3.1 EDGE VS. LEVEL SENSING

Event input detection may be selected as level or edge sensitive. The detection mode is individually selectable for every source. Rising source detection modes are selected with the COGxRSIM register (Register 18-4). Falling source detection modes are selected with the COGxFSIM register (Register 18-6). A set bit enables edge detection for the corresponding event source. A cleared bit enables level detection.

In general, events that are driven from a periodic source should be edge detected and events that are derived from voltage thresholds at the target circuit should be level sensitive. Consider the following two examples:

1. The first example is an application in which the period is determined by a 50% duty cycle clock and the COG output duty cycle is determined by a voltage level fed back through a comparator. If the clock input is level sensitive, duty cycles less than 50% will exhibit erratic operation.

2. The second example is similar to the first except that the duty cycle is close to 100%. The feedback comparator high-to-low transition trips the COG drive off, but almost immediately the period source turns the drive back on. If the off cycle is short enough, the comparator input may not reach the low side of the hysteresis band precluding an output change. The comparator output stays low and without a high-to-low transition to trigger the edge sense, the drive of the COG output will be stuck in a constant drive-on condition. See Figure 18-14.

**FIGURE 18-14: EDGE VS LEVEL SENSE**

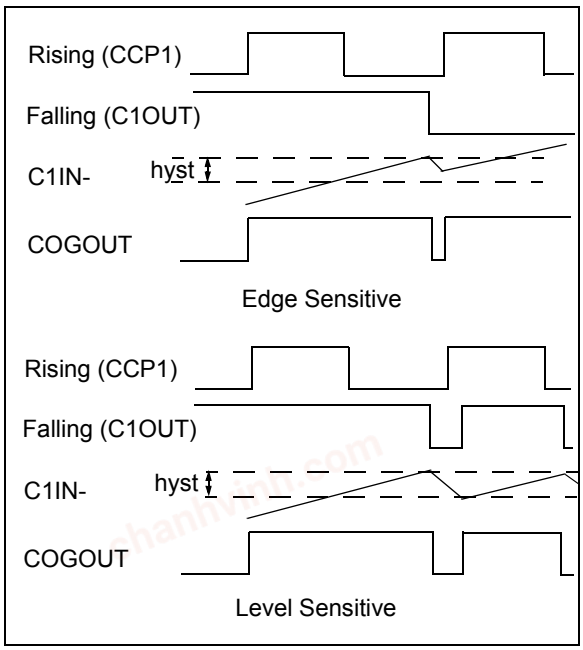


### 18.3.2 RISING EVENT

The rising event starts the PWM output active duty cycle period. The rising event is the low-to-high transition of the rising_event output. When the rising event phase delay and dead-band time values are zero, the primary output starts immediately. Otherwise, the primary output is delayed. The rising event source causes all the following actions:

- Start rising event phase delay counter (if enabled).
- Clear complementary output after phase delay.
- Start falling event input blanking (if enabled).
- Start dead-band delay (if enabled).
- Set primary output after dead-band delay expires.

### 18.3.3 FALLING EVENT

The falling event terminates the PWM output active duty cycle period. The falling event is the high-to-low transition of the falling_event output. When the falling event phase delay and dead-band time values are zero, the complementary output starts immediately. Otherwise, the complementary output is delayed. The falling event source causes all the following actions:

- Start falling event phase delay counter (if enabled).
- Clear primary output.
- Start rising event input blanking (if enabled).
- Start falling event dead-band delay (if enabled).
- Set complementary output after dead-band delay expires.

chanhvinh.com



## 18.4 Output Control

Upon disabling, or immediately after enabling the COG module, the primary COG outputs are inactive and complementary COG outputs are active.

### 18.4.1 OUTPUT ENABLES

There are no output enable controls in the COG module. Instead, each device pin has an individual output selection control called the PPS register. All four COG outputs are available for selection in the PPS register of every pin.

When a COG output is enabled by PPS selection, the output on the pin has several possibilities, which depend on the steering control, GxEN bit, and shutdown state as shown in Table 18-1

.

**TABLE 18-1: PIN OUTPUT STATES**

| GxEN | GxSTR bit | Shutdown | Output |
|---|---|---|---|
| x | 0 | Inactive | Static steering data |
| x | 1 | Active | Shutdown override |
| 0 | 1 | Inactive | Inactive state |
| 1 | 1 | Inactive | Active PWM signal |

### 18.4.2 POLARITY CONTROL

The polarity of each COG output can be selected independently. When the output polarity bit is set, the corresponding output is active low. Clearing the output polarity bit configures the corresponding output as active high. However, polarity affects the outputs in only one of the four shutdown override modes. See Section 18.8, Auto-shutdown Control for more details.

Output polarity is selected with the GxPOLA through GxPOLD bits of the COGxCON1 register (Register 18-2).

## 18.5 Dead-Band Control

The dead-band control provides for non-overlapping PWM output signals to prevent shoot-through current in the external power switches. Dead time affects the output only in the Half-Bridge mode and when changing direction in the Full-Bridge mode.

The COG contains two dead-band timers. One dead-band timer is used for rising event dead-band control. The other is used for falling event dead-band control. Timer modes are selectable as either:

- Asynchronous delay chain
- Synchronous counter

The dead-band timer mode is selected for the rising_event and falling_event dead-band times with the respective GxRDBS and GxFDBS bits of the COGxCON1 register (Register 18-2).

In Half-Bridge mode, the rising_event dead-band time delays all selected primary outputs from going active for the selected dead time after the rising event. COGxA and COGxC are the primary outputs in Half-Bridge mode.

In Half-Bridge mode, the falling_event dead-band time delays all selected complementary outputs from going active for the selected dead time after the falling event. COGxB and COGxD are the complementary outputs in Half-Bridge mode.

In Full-Bridge mode, the dead-time delay occurs only during direction changes. The modulated output is delayed for the falling_event dead time after a direction change from forward to reverse. The modulated output is delayed for the rising_event dead time after a direction change from reverse to forward.

### 18.5.1 ASYNCHRONOUS DELAY CHAIN DEAD-BAND DELAY

Asynchronous dead-band delay is determined by the time it takes the input to propagate through a series of delay elements. Each delay element is a nominal five nanoseconds.

Set the COGxDBR register (Register 18-10) value to the desired number of delay elements in the rising_event dead-band time. Set the COGxDBF register (Register 18-11) value to the desired number of delay elements in the falling_event dead-band time. When the value is zero, dead-band delay is disabled.

### 18.5.2 SYNCHRONOUS COUNTER DEAD-BAND DELAY

Synchronous counter dead band is timed by counting COG_clock periods from zero up to the value in the dead-band count register. Use Equation 18-1 to calculate dead-band times.

Set the COGxDBR count register value to obtain the desired rising_event dead-band time. Set the COGxDBF count register value to obtain the desired falling_event dead-band time. When the value is zero, dead-band delay is disabled.

### 18.5.3 SYNCHRONOUS COUNTER DEAD-BAND TIME UNCERTAINTY

When the rising and falling events that trigger the dead-band counters come from asynchronous inputs, it creates uncertainty in the synchronous counter dead-band time. The maximum uncertainty is equal to one COG_clock period. Refer to Example 18-1 for more detail.

When event input sources are asynchronous with no phase delay, use the asynchronous delay chain dead-band mode to avoid the dead-band time uncertainty.

 © 2013 Microchip Technology Inc.

chanhvinh.com



### 18.5.4 RISING EVENT DEAD-BAND

Rising event dead band delays the turn-on of the primary outputs from when complementary outputs are turned off. The rising event dead-band time starts when the rising_ event output goes true.

See Section 18.5.1, Asynchronous delay chain dead-band delay and Section 18.5.2, Synchronous counter dead-band delay for more information on setting the rising edge dead-band time.

### 18.5.5 FALLING EVENT DEAD-BAND

Falling event dead band delays the turn-on of complementary outputs from when the primary outputs are turned off. The falling event dead-band time starts when the falling_ event output goes true.

See Section 18.5.1, Asynchronous delay chain dead-band delay and Section 18.5.2, Synchronous counter dead-band delay for more information on setting the rising edge dead-band time.

### 18.5.6 DEAD-BAND OVERLAP

There are two cases of dead-band overlap:

- Rising-to-falling
- Falling-to-rising

#### 18.5.6.1 Rising-to-Falling Overlap

In this case, the falling event occurs while the rising event dead-band counter is still counting. When this happens, the primary drives are suppressed and the dead-band extends by the falling event dead-band time. At the termination of the extended dead-band time, the complementary drive goes true.

#### 18.5.6.2 Falling-to-Rising Overlap

In this case, the rising event occurs while the falling event dead-band counter is still counting. When this happens, the complementary drive is suppressed and the dead-band extends by the rising event dead-band time. At the termination of the extended dead-band time, the primary drive goes true.

## 18.6 Blanking Control

Input blanking is a function, whereby, the event inputs can be masked or blanked for a short period of time. This is to prevent electrical transients caused by the turn-on/off of power components from generating a false input event.

The COG contains two blanking counters: one triggered by the rising event and the other triggered by the falling event. The counters are cross coupled with the events they are blanking. The falling event blanking counter is used to blank rising input events and the rising event blanking counter is used to blank falling input events. Once started, blanking extends for the time specified by the corresponding blanking counter.

Blanking is timed by counting COG_clock periods from zero up to the value in the blanking count register. Use Equation 18-1 to calculate blanking times.

### 18.6.1 FALLING EVENT BLANKING OF RISING EVENT INPUTS

The falling event blanking counter inhibits rising event inputs from triggering a rising event. The falling event blanking time starts when the rising event output drive goes false.

The falling event blanking time is set by the value contained in the COGxBLKF register (Register 18-13). Blanking times are calculated using the formula shown in Equation 18-1.

When the COGxBLKF value is zero, falling event blanking is disabled and the blanking counter output is true, thereby, allowing the event signal to pass straight through to the event trigger circuit.

### 18.6.2 RISING EVENT BLANKING OF FALLING EVENT INPUTS

The rising event blanking counter inhibits falling event inputs from triggering a falling event. The rising event blanking time starts when the falling event output drive goes false.

The rising event blanking time is set by the value contained in the COGxBLKR register (Register 18-12).

When the COGxBLKR value is zero, rising event blanking is disabled and the blanking counter output is true, thereby, allowing the event signal to pass straight through to the event trigger circuit.

### 18.6.3 BLANKING TIME UNCERTAINTY

When the rising and falling sources that trigger the blanking counters are asynchronous to the COG_clock, it creates uncertainty in the blanking time. The maximum uncertainty is equal to one COG_clock period. Refer to Equation 18-1 and Example 18-1 for more detail.

## 18.7 Phase Delay

It is possible to delay the assertion of either or both the rising event and falling events. This is accomplished by placing a non-zero value in COGxPHR or COGxPHF phase-delay count register, respectively (Register 18-14 and Register 18-15). Refer to Figure 18-10 for COG operation with CCP1 and phase delay. The delay from the input rising event signal switching to the actual assertion of the events is calculated the same as the dead-band and blanking delays. Refer to Equation 18-1.

When the phase-delay count value is zero, phase delay is disabled and the phase-delay counter output is true, thereby, allowing the event signal to pass straight through to the complementary output driver flop.

chanhvinh.com



### 18.7.1 CUMULATIVE UNCERTAINTY

It is not possible to create more than one COG_clock of uncertainty by successive stages. Consider that the phase-delay stage comes after the blanking stage, the dead-band stage comes after either the blanking or phase-delay stages, and the blanking stage comes after the dead-band stage. When the preceding stage is enabled, the output of that stage is necessarily synchronous with the COG_clock, which removes any possibility of uncertainty in the succeeding stage.

**EQUATION 18-1: PHASE, DEAD-BAND, AND BLANKING TIME CALCULATION**

$$T_{min} = \frac{\text{Count}}{F_{COG_clock}}$$

$$T_{max} = \frac{\text{Count} + 1}{F_{COG_clock}}$$

$$T_{uncertainty} = T_{max} - T_{min}$$

*Also:*

$$T_{uncertainty} = \frac{1}{F_{COG_clock}}$$

*Where:*

| T | Count |
|---|---|
| Rising Phase Delay | COGxPHR |
| Falling Phase Delay | COGxPHF |
| Rising Dead Band | COGxDBR |
| Falling Dead Band | COGxDBF |
| Rising Event Blanking | COGxBLKR |
| Falling Event Blanking | COGxBLKF |

**EXAMPLE 18-1: TIMER UNCERTAINTY**

*Given:*

$$Count = Ah = 10d$$
$$F_{COG_Clock} = 8\text{MHz}$$

*Therefore:*

$$T_{uncertainty} = \frac{1}{F_{COG_clock}} = \frac{1}{8MHz} = 125ns$$

*Proof:*

$$T_{min} = \frac{Count}{F_{COG_clock}} = 125ns \bullet 10d = 1.25\mu s$$

$$T_{max} = \frac{Count + 1}{F_{COG_clock}} = 125ns \bullet (10d + 1) = 1.375\mu s$$

*Therefore:*

$$T_{uncertainty} = T_{max} - T_{min} = 1.375\mu s - 1.25\mu s = 125ns$$

 © 2013 Microchip Technology Inc.

chanhvinh.com



## 18.8 Auto-shutdown Control

Auto-shutdown is a method to immediately override the COG output levels with specific overrides that allow for safe shutdown of the circuit.

The shutdown state can be either cleared automatically or held until cleared by software. In either case, the shutdown overrides remain in effect until the first rising event after the shutdown is cleared.

### 18.8.1 SHUTDOWN

The shutdown state can be entered by either of the following two mechanisms:

- Software generated
- External Input

#### 18.8.1.1 Software Generated Shutdown

Setting the GxASE bit of the COGxASD0 register (Register 18-7) will force the COG into the shutdown state.

When auto-restart is disabled, the shutdown state will persist until the first rising event after the GxASE bit is cleared by software.

When auto-restart is enabled, the GxASE bit will clear automatically and resume operation on the first rising event after the shutdown input clears. See Figure 18-15 and **Section 18.8.3.2 "Auto-Restart"**.

#### 18.8.1.2 External Shutdown Source

External shutdown inputs provide the fastest way to safely suspend COG operation in the event of a Fault condition. When any of the selected shutdown inputs goes true, the output drive latches are reset and the COG outputs immediately go to the selected override levels without software delay.

Any combination of the input sources can be selected to cause a shutdown condition. Shutdown occurs when the selected source is low. Shutdown input sources include:

- Any input pin selected with the COGxPPS control
- C2OUT
- C1OUT
- CLC2OUT

Shutdown inputs are selected independently with bits of the COGxASD1 register (Register 18-8).

| | |
|---|---|
| **Note:** | Shutdown inputs are level sensitive, not edge sensitive. The shutdown state cannot be cleared as long as the shutdown input level persists, except by disabling auto-shutdown, |

### 18.8.2 PIN OVERRIDE LEVELS

The levels driven to the output pins, while the shutdown is active, are controlled by the GxASDAC<1:0> and GxASDBC<1:0> bits of the COGxASD0 register (Register 18-7). GxASDAC<1:0> controls the COGxA and COGxC override levels and GxASDBC<1:0> controls the COGxB and COGxD override levels. There are four override options for each output pair:

- Forced low
- Forced high
- Tri-state
- PWM inactive state (same state as that caused by a falling event)

| | |
|---|---|
| **Note:** | The polarity control does not apply to the forced low and high override levels but does apply to the PWM inactive state. |

### 18.8.3 AUTO-SHUTDOWN RESTART

After an auto-shutdown event has occurred, there are two ways to resume operation:

- Software controlled
- Auto-restart

The restart method is selected with the GxARSEN bit of the COGxASD0 register. Waveforms of a software controlled automatic restart are shown in Figure 18-15.

#### 18.8.3.1 Software Controlled Restart

When the GxARSEN bit of the COGxASD0 register is cleared, software must clear the GxASE bit to restart COG operation after an auto-shutdown event.

The COG will resume operation on the first rising event after the GxASE bit is cleared. Clearing the shutdown state requires all selected shutdown inputs to be false, otherwise, the GxASE bit will remain set.

#### 18.8.3.2 Auto-Restart

When the GxARSEN bit of the COGxASD0 register is set, the COG will restart from the auto-shutdown state automatically.

The GxASE bit will clear automatically and the COG will resume operation on the first rising event after all selected shutdown inputs go false.

chanhvinh.com



**FIGURE 18-15: AUTO-SHUTDOWN WAVEFORM – CCP1 AS RISING AND FALLING EVENT INPUT SOURCE**

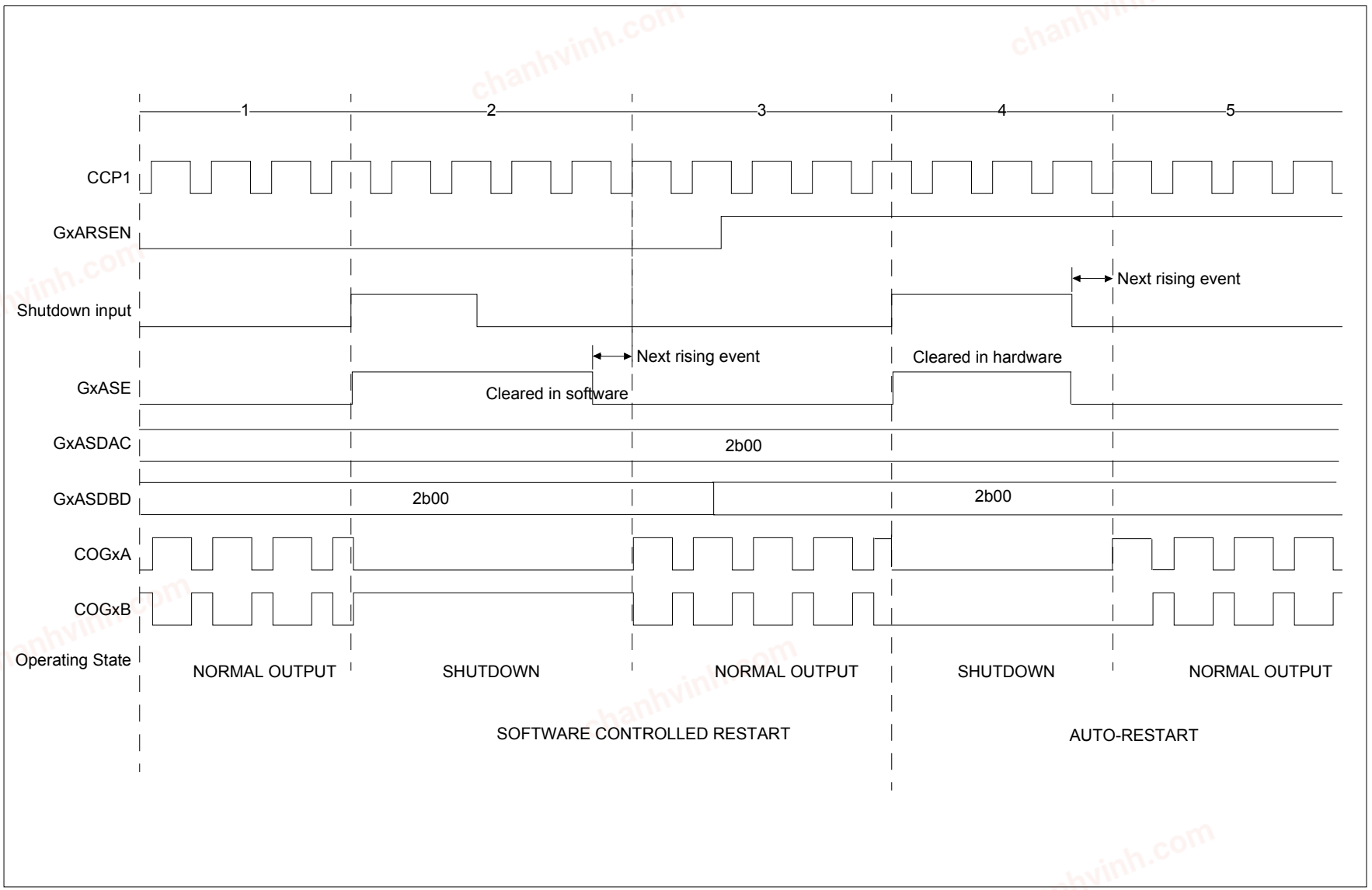




Preliminary

© 2013 Microchip Technology Inc.

chanhvinh.com



## 18.9 Buffer Updates

Changes to the phase, dead band, and blanking count registers need to occur simultaneously during COG operation to avoid unintended operation that may occur as a result of delays between each register write. This is accomplished with the GxLD bit of the COGxCON0 register and double buffering of the phase, blanking, and dead-band count registers.

Before the COG module is enabled, writing the count registers loads the count buffers without need of the GxLD bit. However, when the COG is enabled, the count buffer updates are suspended after writing the count registers until after the GxLD bit is set. When the GxLD bit is set, the phase, dead-band, and blanking register values are transferred to the corresponding buffers synchronous with COG operation. The GxLD bit is cleared by hardware when the transfer is complete.

## 18.10 Input and Output Pin Selection

The COG has one selection for an input from a device pin. That one input can be used as rising and falling event source or a fault source. The COG1PPS register is used to select the pin. Refer to Register 12-1 and Register 12-2.

The pin PPS control registers are used to enable the COG outputs. Any combination of outputs to pins is possible including multiple pins for the same output. See the RxyPPS control register and **Section 12.2 "PPS Outputs"** for more details.

## 18.11 Operation During Sleep

The COG continues to operate in Sleep provided that the COG_clock, rising event, and falling event sources remain active.

The HFINTSOC remains active during Sleep when the COG is enabled and the HFINTOSC is selected as the COG_clock source.

## 18.12 Configuring the COG

The following steps illustrate how to properly configure the COG to ensure a synchronous start with the rising event input:

1. If a pin is to be used for the COG fault or event input, use the COGxPPS register to configure the desired pin.
2. Clear all ANSEL register bits associated with pins that are used for COG functions.
3. Ensure that the TRIS control bits corresponding to the COG outputs to be used are set so that all are configured as inputs. The COG module will enable the output drivers as needed later.
4. Clear the GxEN bit, if not already cleared.
5. Set desired dead-band times with the COGxDBR and COGxDBF registers and select the source with the COGxRDBS and COGxFDBS bits of the COGxCON1 register.
6. Set desired blanking times with the COGxBLKR and COGxBLKF registers.
7. Set desired phase delay with the COGxPHR and COGxPHF registers.
8. Select the desired shutdown sources with the COGxASD1 register.
9. Setup the following controls in COGxASD0 auto-shutdown register:
   - Select both output override controls to the desired levels (this is necessary, even if not using auto-shutdown because start-up will be from a shutdown state).
   - Set the GxASE bit and clear the GxARSEN bit.
10. Select the desired rising and falling event sources with the COGxRIS and COGxFIS registers.
11. Select the desired rising and falling event modes with the COGxRSIM and COGxFSIM registers.
12. Configure the following controls in the COGxCON1 register:
    - Select the desired clock source
    - Select the desired dead-band timing sources
13. Configure the following controls in the COGxSTR register:
    - Set the steering bits of the outputs to be used.
    - Set the static levels.
14. Set the polarity controls in the COGxCON1 register.
15. Set the GxEN bit.
16. Set the pin PPS controls to direct the COG outputs to the desired pins.
17. If auto-restart is to be used, set the GxARSEN bit and the GxASE will be cleared automatically. Otherwise, clear the GxASE bit to start the COG.

chanhvinh.com



## 18.13 Register Definitions: COG Control

**REGISTER 18-1: COGxCON0: COG CONTROL REGISTER 0**

| R/W-0/0 | R/W-0/0 | U-0 | R/W-0/0 | R/W-0/0 | R/W-0/0 | R/W-0/0 | R/W-0/0 |
|---|---|---|---|---|---|---|---|
| GxEN | GxLD | — | GxCS<1:0> | | GxMD<2:0> | | |
| bit 7 | | | | | | | bit 0 |

| **Legend:** | | |
|---|---|---|
| R = Readable bit | W = Writable bit | U = Unimplemented bit, read as '0' |
| u = Bit is unchanged | x = Bit is unknown | -n/n = Value at POR and BOR/Value at all other Resets |
| '1' = Bit is set | '0' = Bit is cleared | q = Value depends on condition |

bit 7 **GxEN:** COGx Enable bit
- 1 = Module is enabled
- 0 = Module is disabled

bit 6 **GxLD:** COGx Load Buffers bit
- 1 = Phase, blanking, and dead-band buffers to be loaded with register values on next input events
- 0 = Register to buffer transfer is complete

bit 5 **Unimplemented:** Read as '0'

bit 4-3 **GxCS<1:0>:** COGx Clock Selection bits
- 11 = Reserved. Do not use.
- 10 = COG_clock is HFINTOSC (stays active during Sleep)
- 01 = COG_clock is FOSC
- 00 = COG_clock is FOSC/4

bit 2-0 **GxMD<2:0>:** COGx Mode Selection bits
- 11x = Reserved. Do not use.
- 101 = COG outputs operate in Push-Pull mode
- 100 = COG outputs operate in Half-Bridge mode
- 011 = COG outputs operate in Reverse Full-Bridge mode
- 010 = COG outputs operate in Forward Full-Bridge mode
- 001 = COG outputs operate in synchronous steered PWM mode
- 000 = COG outputs operate in steered PWM mode

 © 2013 Microchip Technology Inc.

chanhvinh.com



**REGISTER 18-2: COGxCON1: COG CONTROL REGISTER 1**

| R/W-0/0 | R/W-0/0 | U-0 | U-0 | R/W-0/0 | R/W-0/0 | R/W-0/0 | R/W-0/0 |
|---|---|---|---|---|---|---|---|
| GxRDBS | GxFDBS | — | — | GxPOLD | GxPOLC | GxPOLB | GxPOLA |
| bit 7 | | | | | | | bit 0 |

| **Legend:** | | |
|---|---|---|
| R = Readable bit | W = Writable bit | U = Unimplemented bit, read as '0' |
| u = Bit is unchanged | x = Bit is unknown | -n/n = Value at POR and BOR/Value at all other Resets |
| '1' = Bit is set | '0' = Bit is cleared | q = Value depends on condition |

bit 7 **GxRDBS:** COGx Rising Event Dead-band Timing Source Select bit
1 = Delay chain and COGxDBR are used for dead-band timing generation
0 = COGx_clock and COGxDBR are used for dead-band timing generation

bit 6 **GxFDBS:** COGx Falling Event Dead-band Timing Source select bit
1 = Delay chain and COGxDF are used for dead-band timing generation
0 = COGx_clock and COGxDBF are used for dead-band timing generation

bit 5-4 **Unimplemented:** Read as '0'.

bit 3 **GxPOLD:** COGxD Output Polarity Control bit
1 = Active level of COGxD output is low
0 = Active level of COGxD output is high

bit 2 **GxPOLC:** COGxC Output Polarity Control bit
1 = Active level of COGxC output is low
0 = Active level of COGxC output is high

bit 1 **GxPOLB:** COGxB Output Polarity Control bit
1 = Active level of COGxB output is low
0 = Active level of COGxB output is high

bit 0 **GxPOLA:** COGxA Output Polarity Control bit
1 = Active level of COGxA output is low
0 = Active level of COGxA output is high

chanhvinh.com



**REGISTER 18-3: COGxRIS: COG RISING EVENT INPUT SELECTION REGISTER**

| U-0 | R/W-0/0 | R/W-0/0 | R/W-0/0 | R/W-0/0 | R/W-0/0 | R/W-0/0 | R/W-0/0 |
|---|---|---|---|---|---|---|---|
| — | GxRIS6 | GxRIS5 | GxRIS4 | GxRIS3 | GxRIS2 | GxRIS1 | GxRIS0 |
| bit 7 | | | | | | | bit 0 |

| **Legend:** | | |
|---|---|---|
| R = Readable bit | W = Writable bit | U = Unimplemented bit, read as '0' |
| u = Bit is unchanged | x = Bit is unknown | -n/n = Value at POR and BOR/Value at all other Resets |
| '1' = Bit is set | '0' = Bit is cleared | q = Value depends on condition |

bit 7 **Unimplemented:** Read as '0'

bit 6 **GxRIS6:** COGx Rising Event Input Source 6 Enable bit
1 = PWM3 output is enabled as a rising event input
0 = PWM3 has no effect on the rising event

bit 5 **GxRIS5:** COGx Rising Event Input Source 5 Enable bit
1 = CCP2 output is enabled as a rising event input
0 = CCP2 output has no effect on the rising event

bit 4 **GxRIS4:** COGx Rising Event Input Source 4 Enable bit
1 = CCP1 is enabled as a rising event input
0 = CCP1 has no effect on the rising event

bit 3 **GxRIS3:** COGx Rising Event Input Source 3 Enable bit
1 = CLC1 output is enabled as a rising event input
0 = CLC1 output has no effect on the rising event

bit 2 **GxRIS2:** COGx Rising Event Input Source 2 Enable bit
1 = Comparator 2 output is enabled as a rising event input
0 = Comparator 2 output has no effect on the rising event

bit 1 **GxRIS1:** COGx Rising Event Input Source 1 Enable bit
1 = Comparator 1 output is enabled as a rising event input
0 = Comparator 1 output has no effect on the rising event

bit 0 **GxRIS0:** COGx Rising Event Input Source 0 Enable bit
1 = Pin selected with COGxPPS control register is enabled as rising event input
0 = Pin selected with COGxPPS control has no effect on the rising event

 © 2013 Microchip Technology Inc.

chanhvinh.com



**REGISTER 18-4: COGxRSIM: COG RISING EVENT SOURCE INPUT MODE REGISTER**

| U-0 | R/W-0/0 | R/W-0/0 | R/W-0/0 | R/W-0/0 | R/W-0/0 | R/W-0/0 | R/W-0/0 |
|---|---|---|---|---|---|---|---|
| — | GxRSIM6 | GxRSIM5 | GxRSIM4 | GxRSIM3 | GxRSIM2 | GxRSIM1 | GxRSIM0 |
| bit 7 | | | | | | | bit 0 |

| **Legend:** | | |
|---|---|---|
| R = Readable bit | W = Writable bit | U = Unimplemented bit, read as '0' |
| u = Bit is unchanged | x = Bit is unknown | -n/n = Value at POR and BOR/Value at all other Resets |
| '1' = Bit is set | '0' = Bit is cleared | q = Value depends on condition |

bit 7 **Unimplemented:** Read as '0'

bit 6 **GxRSIM6:** COGx Rising Event Input Source 6 Mode bit
GxRIS6 = 1:
1 = PWM3 output low-to-high transition will cause a rising event after rising event phase delay
0 = PWM3 output high level will cause an immediate rising event
GxRIS6 = 0:
PWM3 output has no effect on rising event

bit 5 **GxRSIM5:** COGx Rising Event Input Source 5 Mode bit
GxRIS5 = 1:
1 = CCP2 output low-to-high transition will cause a rising event after rising event phase delay
0 = CCP2 output high level will cause an immediate rising event
GxRIS5 = 0:
CCP2 output has no effect on rising event

bit 4 **GxRSIM4:** COGx Rising Event Input Source 4 Mode bit
GxRIS4 = 1:
1 = CCP1 low-to-high transition will cause a rising event after rising event phase delay
0 = CCP1 high level will cause an immediate rising event
GxRIS4 = 0:
CCP1 has no effect on rising event

bit 3 **GxRSIM3:** COGx Rising Event Input Source 3 Mode bit
GxRIS3 = 1:
1 = CLC1 output low-to-high transition will cause a rising event after rising event phase delay
0 = CLC1 output high level will cause an immediate rising event
GxRIS3 = 0:
CLC1 output has no effect on rising event

bit 2 **GxRSIM2:** COGx Rising Event Input Source 2 Mode bit
GxRIS2 = 1:
1 = Comparator 2 low-to-high transition will cause a rising event after rising event phase delay
0 = Comparator 2 high level will cause an immediate rising event
GxRIS2 = 0:
Comparator 2 has no effect on rising event

bit 1 **GxRSIM1:** COGx Rising Event Input Source 1 Mode bit
GxRIS1 = 1:
1 = Comparator 1 low-to-high transition will cause a rising event after rising event phase delay
0 = Comparator 1 high level will cause an immediate rising event
GxRIS1 = 0:
Comparator 1 has no effect on rising event

bit 0 **GxRSIM0:** COGx Rising Event Input Source 0 Mode bit
GxRIS0 = 1:
1 = Pin selected with COGxPPS control low-to-high transition will cause a rising event after rising event phase delay
0 = Pin selected with COGxPPS control high level will cause an immediate rising event
GxRIS0 = 0:
Pin selected with COGxPPS control has no effect on rising event

chanhvinh.com



**REGISTER 18-5: COGxFIS: COG FALLING EVENT INPUT SELECTION REGISTER**

| U-0 | R/W-0/0 | R/W-0/0 | R/W-0/0 | R/W-0/0 | R/W-0/0 | R/W-0/0 | R/W-0/0 |
|---|---|---|---|---|---|---|---|
| — | GxFIS6 | GxFIS5 | GxFIS4 | GxFIS3 | GxFIS2 | GxFIS1 | GxFIS0 |
| bit 7 | | | | | | | bit 0 |

| **Legend:** | | |
|---|---|---|
| R = Readable bit | W = Writable bit | U = Unimplemented bit, read as '0' |
| u = Bit is unchanged | x = Bit is unknown | -n/n = Value at POR and BOR/Value at all other Resets |
| '1' = Bit is set | '0' = Bit is cleared | q = Value depends on condition |

bit 7 **Unimplemented:** Read as '0'

bit 6 **GxFIS6:** COGx Falling Event Input Source 6 Enable bit
1 = PWM3 output is enabled as a falling event input
0 = PWM3 has no effect on the falling event

bit 5 **GxFIS5:** COGx Falling Event Input Source 5 Enable bit
1 = CCP2 output is enabled as a falling event input
0 = CCP2 output has no effect on the falling event

bit 4 **GxFIS4:** COGx Falling Event Input Source 4 Enable bit
1 = CCP1 is enabled as a falling event input
0 = CCP1 has no effect on the falling event

bit 3 **GxFIS3:** COGx Falling Event Input Source 3 Enable bit
1 = CLC1 output is enabled as a falling event input
0 = CLC1 output has no effect on the falling event

bit 2 **GxFIS2:** COGx Falling Event Input Source 2 Enable bit
1 = Comparator 2 output is enabled as a falling event input
0 = Comparator 2 output has no effect on the falling event

bit 1 **GxFIS1:** COGx Falling Event Input Source 1 Enable bit
1 = Comparator 1 output is enabled as a falling event input
0 = Comparator 1 output has no effect on the falling event

bit 0 **GxFIS0:** COGx Falling Event Input Source 0 Enable bit
1 = Pin selected with COGxPPS control register is enabled as falling event input
0 = Pin selected with COGxPPS control has no effect on the falling event

 © 2013 Microchip Technology Inc.

chanhvinh.com



**REGISTER 18-6: COGxFSIM: COG FALLING EVENT SOURCE INPUT MODE REGISTER**

| U-0 | R/W-0/0 | R/W-0/0 | R/W-0/0 | R/W-0/0 | R/W-0/0 | R/W-0/0 | R/W-0/0 |
|---|---|---|---|---|---|---|---|
| — | GxFSIM6 | GxFSIM5 | GxFSIM4 | GxFSIM3 | GxFSIM2 | GxFSIM1 | GxFSIM0 |
| bit 7 | | | | | | | bit 0 |

| **Legend:** | | |
|---|---|---|
| R = Readable bit | W = Writable bit | U = Unimplemented bit, read as '0' |
| u = Bit is unchanged | x = Bit is unknown | -n/n = Value at POR and BOR/Value at all other Resets |
| '1' = Bit is set | '0' = Bit is cleared | q = Value depends on condition |

bit 7 **Unimplemented:** Read as '0'

bit 6 **GxFSIM6:** COGx Falling Event Input Source 6 Mode bit
GxFIS6 = 1:
1 = PWM3 output low-to-high transition will cause a falling event after falling event phase delay
0 = PWM3 output high level will cause an immediate falling event
GxFIS6 = 0:
PWM3 output has no effect on falling event

bit 5 **GxFSIM5:** COGx Falling Event Input Source 5 Mode bit
GxFIS5 = 1:
1 = CCP2 output low-to-high transition will cause a falling event after falling event phase delay
0 = CCP2 output high level will cause an immediate falling event
GxFIS5 = 0:
CCP2 output has no effect on falling event

bit 4 **GxFSIM4:** COGx Falling Event Input Source 4 Mode bit
GxFIS4 = 1:
1 = CCP1 low-to-high transition will cause a falling event after falling event phase delay
0 = CCP1 high level will cause an immediate falling event
GxFIS4 = 0:
CCP1 has no effect on falling event

bit 3 **GxFSIM3:** COGx Falling Event Input Source 3 Mode bit
GxFIS3 = 1:
1 = CLC1 output low-to-high transition will cause a falling event after falling event phase delay
0 = CLC1 output high level will cause an immediate falling event
GxFIS3 = 0:
CLC1 output has no effect on falling event

bit 2 **GxFSIM2:** COGx Falling Event Input Source 2 Mode bit
GxFIS2 = 1:
1 = Comparator 2 low-to-high transition will cause a falling event after falling event phase delay
0 = Comparator 2 high level will cause an immediate falling event
GxFIS2 = 0:
Comparator 2 has no effect on falling event

bit 1 **GxFSIM1:** COGx Falling Event Input Source 1 Mode bit
GxFIS1 = 1:
1 = Comparator 1 low-to-high transition will cause a falling event after falling event phase delay
0 = Comparator 1 high level will cause an immediate falling event
GxFIS1 = 0:
Comparator 1 has no effect on falling event

bit 0 **GxFSIM0:** COGx Falling Event Input Source 0 Mode bit
GxFIS0 = 1:
1 = Pin selected with COGxPPS control low-to-high transition will cause a falling event after falling event phase delay
0 = Pin selected with COGxPPS control high level will cause an immediate falling event
GxFIS0 = 0:
Pin selected with COGxPPS control has no effect on falling event

chanhvinh.com



**REGISTER 18-7: COGxASD0: COG AUTO-SHUTDOWN CONTROL REGISTER 0**

| R/W-0/0 | R/W-0/0 | R/W-0/0 | R/W-0/0 | R/W-0/0 | R/W-0/0 | U-0 | U-0 |
|---|---|---|---|---|---|---|---|
| GxASE | GxARSEN | GxASDBD<1:0> | | GxASDAC<1:0> | | — | — |
| bit 7 | | | | | | | bit 0 |

| **Legend:** | | |
|---|---|---|
| R = Readable bit | W = Writable bit | U = Unimplemented bit, read as '0' |
| u = Bit is unchanged | x = Bit is unknown | -n/n = Value at POR and BOR/Value at all other Resets |
| '1' = Bit is set | '0' = Bit is cleared | q = Value depends on condition |

bit 7 **GxASE:** Auto-Shutdown Event Status bit
1 = COG is in the shutdown state
0 = COG is either not in the shutdown state or will exit the shutdown state on the next rising event

bit 6 **GxARSEN:** Auto-Restart Enable bit
1 = Auto-restart is enabled
0 = Auto-restart is disabled

bit 5-4 **GxASDBD<1:0>:** COGxB and COGxD Auto-shutdown Override Level Select bits
11 = COGxB and COGxD are tri-stated when shutdown is active
10 = The inactive state of the pin, including polarity, is placed on COGxB and COGxD when shutdown is active
01 = A logic '1' is placed on COGxB and COGxD when shutdown is active
00 = A logic '0' is placed on COGxB and COGxD when shutdown is active

bit 3-2 **GxASDAC<1:0>:** COGxA and COGxC Auto-shutdown Override Level Select bits
11 = COGxA and COGxC are tri-stated when shutdown is active
10 = The inactive state of the pin, including polarity, is placed on COGxA and COGxC when shutdown is active
01 = A logic '1' is placed on COGxA and COGxC when shutdown is active
00 = A logic '0' is placed on COGxA and COGxC when shutdown is active

bit 1-0 **Unimplemented:** Read as '0'

 © 2013 Microchip Technology Inc.

chanhvinh.com



**REGISTER 18-8: COGxASD1: COG AUTO-SHUTDOWN CONTROL REGISTER 1**

| U-0 | U-0 | U-0 | U-0 | R/W-0/0 | R/W-0/0 | R/W-0/0 | R/W-0/0 |
|---|---|---|---|---|---|---|---|
| — | — | — | — | GxAS3E | GxAS2E | GxAS1E | GxAS0E |
| bit 7 | | | | | | | bit 0 |

| **Legend:** | | |
|---|---|---|
| R = Readable bit | W = Writable bit | U = Unimplemented bit, read as '0' |
| u = Bit is unchanged | x = Bit is unknown | -n/n = Value at POR and BOR/Value at all other Resets |
| '1' = Bit is set | '0' = Bit is cleared | q = Value depends on condition |

bit 7-4 **Unimplemented:** Read as '0'

bit 3 **GxAS3E:** COGx Auto-shutdown Source Enable bit 3
1 = COGx is shutdown when CLC2 output is low
0 = CLC2 output has no effect on shutdown

bit 2 **GxAS2E:** COGx Auto-shutdown Source Enable bit 2
1 = COGx is shutdown when Comparator 2 output is low
0 = Comparator 2 output has no effect on shutdown

bit 1 **GxAS1E:** COGx Auto-shutdown Source Enable bit 1
1 = COGx is shutdown when Comparator 1 output is low
0 = Comparator 1 output has no effect on shutdown

bit 0 **GxAS0E:** COGx Auto-shutdown Source Enable bit 0
1 = COGx is shutdown when Pin selected with COGxPPS control is low
0 = Pin selected with COGxPPS control has no effect on shutdown

chanhvinh.com



**REGISTER 18-9: COGxSTR: COG STEERING CONTROL REGISTER 1**

| R/W-0/0 | R/W-0/0 | R/W-0/0 | R/W-0/0 | R/W-0/0 | R/W-0/0 | R/W-0/0 | R/W-0/0 |
|---|---|---|---|---|---|---|---|
| GxDATD | GxDATC | GxDATB | GxDATA | GxSTRD | GxSTRC | GxSTRB | GxSTRA |
| bit 7 | | | | | | | bit 0 |

| **Legend:** | | |
|---|---|---|
| R = Readable bit | W = Writable bit | U = Unimplemented bit, read as '0' |
| u = Bit is unchanged | x = Bit is unknown | -n/n = Value at POR and BOR/Value at all other Resets |
| '1' = Bit is set | '0' = Bit is cleared | q = Value depends on condition |

bit 7 **GxSDATD:** COGxD Static Output Data bit
1 = COGxD static data is high
0 = COGxD static data is low

bit 6 **GxSDATC:** COGxC Static Output Data bit
1 = COGxC static data is high
0 = COGxC static data is low

bit 5 **GxSDATB:** COGxB Static Output Data bit
1 = COGxB static data is high
0 = COGxB static data is low

bit 4 **GxSDATA:** COGxA Static Output Data bit
1 = COGxA static data is high
0 = COGxA static data is low

bit 3 **GxSTRD:** COGxD Steering Control bit
1 = COGxD output has the COGxD waveform with polarity control from GxPOLD bit
0 = COGxD output is the static data level determined by the GxSDATD bit

bit 2 **GxSTRC:** COGxC Steering Control bit
1 = COGxC output has the COGxC waveform with polarity control from GxPOLC bit
0 = COGxC output is the static data level determined by the GxSDATC bit

bit 1 **GxSTRB:** COGxB Steering Control bit
1 = COGxB output has the COGxB waveform with polarity control from GxPOLB bit
0 = COGxB output is the static data level determined by the GxSDATB bit

bit 0 **GxSTRA:** COGxA Steering Control bit
1 = COGxA output has the COGxA waveform with polarity control from GxPOLA bit
0 = COGxA output is the static data level determined by the GxSDATA bit

 © 2013 Microchip Technology Inc.

chanhvinh.com



**REGISTER 18-10: COGxDBR: COG RISING EVENT DEAD-BAND COUNT REGISTER**

| U-0 | U-0 | R/W-x/u | R/W-x/u | R/W-x/u | R/W-x/u | R/W-x/u | R/W-x/u |
|---|---|---|---|---|---|---|---|
| | | GxDBR<5:0> | | | | | |
| bit 7 | | | | | | | bit 0 |

| **Legend:** | | |
|---|---|---|
| R = Readable bit | W = Writable bit | U = Unimplemented bit, read as '0' |
| u = Bit is unchanged | x = Bit is unknown | -n/n = Value at POR and BOR/Value at all other Resets |
| '1' = Bit is set | '0' = Bit is cleared | q = Value depends on condition |

bit 7-6 **Unimplemented:** Read as '0'

bit 5-0 **GxDBR<5:0>:** Rising Event Dead-band Count Value bits

GxRDBS = 0:
= Number of COGx clock periods to delay primary output after rising event

GxRDBS = 1:
= Number of delay chain element periods to delay primary output after rising event

**REGISTER 18-11: COGxDBF: COG FALLING EVENT DEAD-BAND COUNT REGISTER**

| U-0 | U-0 | R/W-x/u | R/W-x/u | R/W-x/u | R/W-x/u | R/W-x/u | R/W-x/u |
|---|---|---|---|---|---|---|---|
| | | GxDBF<5:0> | | | | | |
| bit 7 | | | | | | | bit 0 |

| **Legend:** | | |
|---|---|---|
| R = Readable bit | W = Writable bit | U = Unimplemented bit, read as '0' |
| u = Bit is unchanged | x = Bit is unknown | -n/n = Value at POR and BOR/Value at all other Resets |
| '1' = Bit is set | '0' = Bit is cleared | q = Value depends on condition |

bit 7-6 **Unimplemented:** Read as '0'

bit 5-0 **GxDBF<5:0>:** Falling Event Dead-band Count Value bits

GxFDBS = 0:
= Number of COGx clock periods to delay complementary output after falling event input

GxFDBS = 1:
= Number of delay chain element periods to delay complementary output after falling event input

chanhvinh.com



**REGISTER 18-12: COGxBLKR: COG RISING EVENT BLANKING COUNT REGISTER**

| U-0 | U-0 | R/W-x/u | R/W-x/u | R/W-x/u | R/W-x/u | R/W-x/u | R/W-x/u |
|---|---|---|---|---|---|---|---|
| | | GxBLKR<5:0> | | | | | |
| bit 7 | | | | | | | bit 0 |

| **Legend:** | | |
|---|---|---|
| R = Readable bit | W = Writable bit | U = Unimplemented bit, read as '0' |
| u = Bit is unchanged | x = Bit is unknown | -n/n = Value at POR and BOR/Value at all other Resets |
| '1' = Bit is set | '0' = Bit is cleared | q = Value depends on condition |

bit 7-6 **Unimplemented:** Read as '0'

bit 5-0 **GxBLKR<5:0>:** Rising Event Blanking Count Value bits
= Number of COGx clock periods to inhibit falling event inputs

**REGISTER 18-13: COGxBLKF: COG FALLING EVENT BLANKING COUNT REGISTER**

| U-0 | U-0 | R/W-x/u | R/W-x/u | R/W-x/u | R/W-x/u | R/W-x/u | R/W-x/u |
|---|---|---|---|---|---|---|---|
| | | GxBLKF<5:0> | | | | | |
| bit 7 | | | | | | | bit 0 |

| **Legend:** | | |
|---|---|---|
| R = Readable bit | W = Writable bit | U = Unimplemented bit, read as '0' |
| u = Bit is unchanged | x = Bit is unknown | -n/n = Value at POR and BOR/Value at all other Resets |
| '1' = Bit is set | '0' = Bit is cleared | q = Value depends on condition |

bit 7-6 **Unimplemented:** Read as '0'

bit 5-0 **GxBLKF<5:0>:** Falling Event Blanking Count Value bits
= Number of COGx clock periods to inhibit rising event inputs

 © 2013 Microchip Technology Inc.

chanhvinh.com



**REGISTER 18-14: COGxPHR: COG RISING EDGE PHASE DELAY COUNT REGISTER**

| U-0 | U-0 | R/W-x/u | R/W-x/u | R/W-x/u | R/W-x/u | R/W-x/u | R/W-x/u |
|---|---|---|---|---|---|---|---|
| — | — | GxPHR<5:0> | | | | | |
| bit 7 | | | | | | | bit 0 |

| **Legend:** | | |
|---|---|---|
| R = Readable bit | W = Writable bit | U = Unimplemented bit, read as '0' |
| u = Bit is unchanged | x = Bit is unknown | -n/n = Value at POR and BOR/Value at all other Resets |
| '1' = Bit is set | '0' = Bit is cleared | q = Value depends on condition |

bit 7-6 **Unimplemented:** Read as '0'

bit 5-0 **GxPHR<5:0>:** Rising Edge Phase Delay Count Value bits
= Number of COGx clock periods to delay rising edge event

**REGISTER 18-15: COGxPHF: COG FALLING EDGE PHASE DELAY COUNT REGISTER**

| U-0 | U-0 | R/W-x/u | R/W-x/u | R/W-x/u | R/W-x/u | R/W-x/u | R/W-x/u |
|---|---|---|---|---|---|---|---|
| — | — | GxPHF<5:0> | | | | | |
| bit 7 | | | | | | | bit 0 |

| **Legend:** | | |
|---|---|---|
| R = Readable bit | W = Writable bit | U = Unimplemented bit, read as '0' |
| u = Bit is unchanged | x = Bit is unknown | -n/n = Value at POR and BOR/Value at all other Resets |
| '1' = Bit is set | '0' = Bit is cleared | q = Value depends on condition |

bit 7-6 **Unimplemented:** Read as '0'

bit 5-0 **GxPHF<5:0>:** Falling Edge Phase Delay Count Value bits
= Number of COGx clock periods to delay falling edge event

chanhvinh.com



**TABLE 18-2: SUMMARY OF REGISTERS ASSOCIATED WITH COG**

| Name | Bit 7 | Bit 6 | Bit 5 | Bit 4 | Bit 3 | Bit 2 | Bit 1 | Bit 0 | Register on Page |
|---|---|---|---|---|---|---|---|---|---|
| ANSELA | — | — | — | ANSA4 | — | ANSA2 | ANSA1 | ANSA0 | 125 |
| ANSELB(1) | — | — | ANSB5 | ANSB4 | — | — | — | — | 131 |
| ANSELC | ANSC7(1) | ANSC6(1) | ANSC5(2) | ANSC4(2) | ANSC3 | ANSC2 | ANSC1 | ANSC0 | 136 |
| COG1PHR | — | — | G1PHR<5:0> | | | | | | 205 |
| COG1PHF | — | — | G1PHF<5:0> | | | | | | 205 |
| COG1BLKR | — | — | G1BLKR<5:0> | | | | | | 204 |
| COG1BLKF | — | — | G1BLKF<5:0> | | | | | | 204 |
| COG1DBR | — | — | G1DBR<5:0> | | | | | | 203 |
| COG1DBF | — | — | G1DBF<5:0> | | | | | | 203 |
| COG1RIS | — | G1RIS6 | G1RIS5 | G1RIS4 | G1RIS3 | G1RIS2 | G1RIS1 | G1RIS0 | 196 |
| COG1RSIM | — | G1RSIM6 | G1RSIM5 | G1RSIM4 | G1RSIM3 | G1RSIM2 | G1RSIM1 | G1RSIM0 | 197 |
| COG1FIS | — | G1FIS6 | G1FIS5 | G1FIS4 | G1FIS3 | G1FIS2 | G1FIS1 | G1FIS0 | 198 |
| COG1FSIM | — | G1FSIM6 | G1FSIM5 | G1FSIM4 | G1FSIM3 | G1FSIM2 | G1FSIM1 | G1FSIM0 | 199 |
| COG1CON0 | G1EN | G1LD | — | G1CS<1:0> | | G1MD<2:0> | | | 194 |
| COG1CON1 | G1RDBS | G1FDBS | — | — | G1POLD | G1POLC | G1POLB | G1POLA | 195 |
| COG1ASD0 | G1ASE | G1ARSEN | G1ASDBD<1:0> | | G1ASDAC<1:0> | | — | — | 200 |
| COG1ASD1 | — | — | — | — | G1AS3E | G1AS2E | G1AS1E | G1AS0E | 201 |
| COG1STR | G1SDATD | G1SDATC | G1SDATB | G1SDATA | G1STRD | G1STRC | G1STRB | G1STRA | 202 |
| INTCON | GIE | PEIE | T0IE | INTE | IOCIE | T0IF | INTF | IOCIF | 86 |
| COG1PPS | — | — | — | COG1PPS<4:0> | | | | | 142 |
| PIE2 | OSFIE | C2IE | C1IE | — | BCL1IE | TMR6IE | TMR4IE | CCP2IE | 88 |
| PIR2 | OSFIF | C2IF | C1IF | — | BCL1IF | TMR6IF | TMR4IF | CCP2IF | 91 |
| RxyPPS | — | — | — | RxyPPS<4:0> | | | | | 143 |

**Legend:** x = unknown, u = unchanged, – = unimplemented locations read as '0'. Shaded cells are not used by COG.

**Note 1:** PIC16(L)F1708 only.

**2:** PIC16(L)F1704 only.

 © 2013 Microchip Technology Inc.

chanhvinh.com



## 19.0 CONFIGURABLE LOGIC CELL (CLC)

The Configurable Logic Cell (CLCx) provides programmable logic that operates outside the speed limitations of software execution. The logic cell takes up to 32 input signals and, through the use of configurable gates, reduces the 32 inputs to four logic lines that drive one of eight selectable single-output logic functions.

Input sources are a combination of the following:

- I/O pins
- Internal clocks
- Peripherals
- Register bits

The output can be directed internally to peripherals and to an output pin.

Refer to Figure 19-1 for a simplified diagram showing signal flow through the CLCx.

Possible configurations include:

- Combinatorial Logic
  - AND
  - NAND
  - AND-OR
  - AND-OR-INVERT
  - OR-XOR
  - OR-XNOR
- Latches
  - S-R
  - Clocked D with Set and Reset
  - Transparent D with Set and Reset
  - Clocked J-K with Reset

**FIGURE 19-1: CLCx SIMPLIFIED BLOCK DIAGRAM**

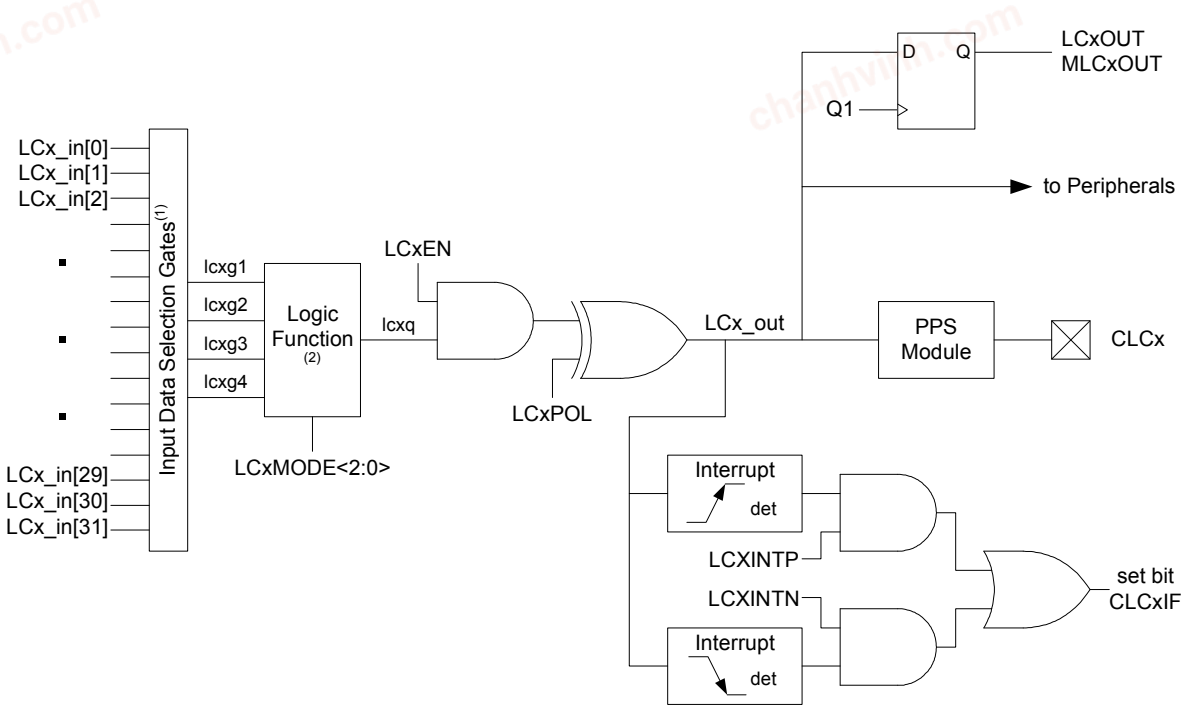


**Note 1:** See Figure 19-2: Input Data Selection and Gating.
**2:** See Figure 19-3: Programmable Logic Functions.

chanhvinh.com



## 19.1 CLCx Setup

Programming the CLCx module is performed by configuring the four stages in the logic signal flow. The four stages are:

- Data selection
- Data gating
- Logic function selection
- Output polarity

Each stage is setup at run time by writing to the corresponding CLCx Special Function Registers. This has the added advantage of permitting logic reconfiguration on-the-fly during program execution.

### 19.1.1 DATA SELECTION

There are 32 signals available as inputs to the configurable logic. Four 32-input multiplexers are used to select the inputs to pass on to the next stage.

Data selection is through four multiplexers as indicated on the left side of Figure 19-2. Data inputs in the figure are identified by a generic numbered input name.

Table 19-1 correlates the generic input name to the actual signal for each CLC module. The column labeled lcxdy indicates the MUX selection code for the selected data input. DxS is an abbreviation for the MUX select input codes: LCxD1S<4:0> through LCxD4S<4:0>.

Data inputs are selected with CLCxSEL0 through CLCxSEL3 registers (Register 19-3 through Register 19-6).

| **Note:** | Data selections are undefined at power-up. |
|---|---|

**TABLE 19-1: CLCx DATA INPUT SELECTION**

| Data Input | lcxdy DxS | CLCx |
|---|---|---|
| LCx_in[31] | 11111 | FOSC |
| LCx_in[30] | 11110 | HFINTOSC |
| LCx_in[29] | 11101 | LFINTOSC |
| LCx_in[28] | 11100 | ADCRC |
| LCx_in[27] | 11011 | IOCIF set signal (bit?) |
| LCx_in[26] | 11010 | T2_match |
| LCx_in[25] | 11001 | T1_overflow |
| LCx_in[24] | 11000 | T0_overflow |
| LCx_in[23] | 10111 | T6_match |
| LCx_in[22] | 10110 | T4_match |
| LCx_in[21] | 10101 | DT from EUSART |
| LCx_in[20] | 10100 | TX/CK from EUSART |
| LCx_in[19] | 10011 | ZCDx_out from Zero-Cross Detect |
| LCx_in[18] | 10010 | SDO from MSSP |
| LCx_in[17] | 10001 | Reserved |
| LCx_in[16] | 10000 | SCK from MSSP |
| LCx_in[15] | 01111 | PWM4_out |
| LCx_in[14] | 01110 | PWM3_out |
| LCx_in[13] | 01101 | CCP2 output |
| LCx_in[12] | 01100 | CCP1 output |
| LCx_in[11] | 01011 | COG1B |
| LCx_in[10] | 01010 | COG1A |
| LCx_in[9] | 01001 | C2OUT |
| LCx_in[8] | 01000 | C1OUT |
| LCx_in[7] | 00111 | Reserved |
| LCx_in[6] | 00110 | LC3_out from the CLC3 |
| LCx_in[5] | 00101 | LC2_out from the CLC2 |
| LCx_in[4] | 00100 | LC1_out from the CLC1 |
| LCx_in[3] | 00011 | CLCIN3 pin input selected in CLCIN3PPS register |
| LCx_in[2] | 00010 | CLCIN2 pin input selected in CLCIN2PPS register |
| LCx_in[1] | 00001 | CLCIN1 pin input selected in CLCIN1PPS register |
| LCx_in[0] | 00000 | CLCIN0 pin input selected in CLCIN0PPS register |

 © 2013 Microchip Technology Inc.

chanhvinh.com



### 19.1.2 DATA GATING

Outputs from the input multiplexers are directed to the desired logic function input through the data gating stage. Each data gate can direct any combination of the four selected inputs.

| **Note:** | Data gating is undefined at power-up. |
|---|---|

The gate stage is more than just signal direction. The gate can be configured to direct each input signal as inverted or non-inverted data. Directed signals are ANDed together in each gate. The output of each gate can be inverted before going on to the logic function stage.

The gating is in essence a 1-to-4 input AND/NAND/OR/NOR gate. When every input is inverted and the output is inverted, the gate is an OR of all enabled data inputs. When the inputs and output are not inverted, the gate is an AND or all enabled inputs.

Table 19-2 summarizes the basic logic that can be obtained in gate 1 by using the gate logic select bits. The table shows the logic of four input variables, but each gate can be configured to use less than four. If no inputs are selected, the output will be zero or one, depending on the gate output polarity bit.

**TABLE 19-2: DATA GATING LOGIC**

| CLCxGLS0 | LCxG1POL | Gate Logic |
|---|---|---|
| 0x55 | 1 | AND |
| 0x55 | 0 | NAND |
| 0xAA | 1 | NOR |
| 0xAA | 0 | OR |
| 0x00 | 0 | Logic 0 |
| 0x00 | 1 | Logic 1 |

It is possible (but not recommended) to select both the true and negated values of an input. When this is done, the gate output is zero, regardless of the other inputs, but may emit logic glitches (transient-induced pulses). If the output of the channel must be zero or one, the recommended method is to set all gate bits to zero and use the gate polarity bit to set the desired level.

Data gating is configured with the logic gate select registers as follows:

- Gate 1: CLCxGLS0 (Register 19-7)
- Gate 2: CLCxGLS1 (Register 19-8)
- Gate 3: CLCxGLS2 (Register 19-9)
- Gate 4: CLCxGLS3 (Register 19-10)

Register number suffixes are different than the gate numbers because other variations of this module have multiple gate selections in the same register.

Data gating is indicated in the right side of Figure 19-2. Only one gate is shown in detail. The remaining three gates are configured identically with the exception that the data enables correspond to the enables for that gate.

### 19.1.3 LOGIC FUNCTION

There are eight available logic functions including:

- AND-OR
- OR-XOR
- AND
- S-R Latch
- D Flip-Flop with Set and Reset
- D Flip-Flop with Reset
- J-K Flip-Flop with Reset
- Transparent Latch with Set and Reset

Logic functions are shown in Figure 19-3. Each logic function has four inputs and one output. The four inputs are the four data gate outputs of the previous stage. The output is fed to the inversion stage and from there to other peripherals, an output pin, and back to the CLCx itself.

### 19.1.4 OUTPUT POLARITY

The last stage in the configurable logic cell is the output polarity. Setting the LCxPOL bit of the CLCxCON register inverts the output signal from the logic stage. Changing the polarity while the interrupts are enabled will cause an interrupt for the resulting output transition.

chanhvinh.com



### 19.1.5 CLCx SETUP STEPS

The following steps should be followed when setting up the CLCx:

- Disable CLCx by clearing the LCxEN bit.
- Select desired inputs using CLCxSEL0 through CLCxSEL3 registers (See Table 19-1).
- Clear any associated ANSEL bits.
- Set all TRIS bits associated with inputs.
- Clear all TRIS bits associated with outputs.
- Enable the chosen inputs through the four gates using CLCxGLS0, CLCxGLS1, CLCxGLS2, and CLCxGLS3 registers.
- Select the gate output polarities with the LCxPOLy bits of the CLCxPOL register.
- Select the desired logic function with the LCxMODE<2:0> bits of the CLCxCON register.
- Select the desired polarity of the logic output with the LCxPOL bit of the CLCxPOL register. (This step may be combined with the previous gate output polarity step).
- If driving a device pin, set the desired pin PPS control register and also clear the TRIS bit corresponding to that output.
- If interrupts are desired, configure the following bits:
  - Set the LCxINTP bit in the CLCxCON register for rising event.
  - Set the LCxINTN bit in the CLCxCON register for falling event.
  - Set the CLCxIE bit of the associated PIE registers.
  - Set the GIE and PEIE bits of the INTCON register.
- Enable the CLCx by setting the LCxEN bit of the CLCxCON register.

## 19.2 CLCx Interrupts

An interrupt will be generated upon a change in the output value of the CLCx when the appropriate interrupt enables are set. A rising edge detector and a falling edge detector are present in each CLC for this purpose.

The CLCxIF bit of the associated PIR registers will be set when either edge detector is triggered and its associated enable bit is set. The LCxINTP enables rising edge interrupts and the LCxINTN bit enables falling edge interrupts. Both are located in the CLCxCON register.

To fully enable the interrupt, set the following bits:

- LCxON bit of the CLCxCON register
- CLCxIE bit of the associated PIE registers
- LCxINTP bit of the CLCxCON register (for a rising edge detection)
- LCxINTN bit of the CLCxCON register (for a falling edge detection)
- PEIE and GIE bits of the INTCON register

The CLCxIF bit of the associated PIR registers, must be cleared in software as part of the interrupt service. If another edge is detected while this flag is being cleared, the flag will still be set at the end of the sequence.

## 19.3 Output Mirror Copies

Mirror copies of all LCxCON output bits are contained in the CLCxDATA register. Reading this register reads the outputs of all CLCs simultaneously. This prevents any reading skew introduced by testing or reading the CLCxOUT bits in the individual CLCxCON registers.

## 19.4 Effects of a Reset

The CLCxCON register is cleared to zero as the result of a Reset. All other selection and gating values remain unchanged.

## 19.5 Operation During Sleep

The CLC module operates independently from the system clock and will continue to run during Sleep, provided that the input sources selected remain active.

The HFINTOSC remains active during Sleep when the CLC module is enabled and the HFINTOSC is selected as an input source, regardless of the system clock source selected.

In other words, if the HFINTOSC is simultaneously selected as the system clock and as a CLC input source, when the CLC is enabled, the CPU will go idle during Sleep, but the CLC will continue to operate and the HFINTOSC will remain active.

This will have a direct effect on the Sleep mode current.

 © 2013 Microchip Technology Inc.

chanhvinh.com



**FIGURE 19-2: INPUT DATA SELECTION AND GATING**

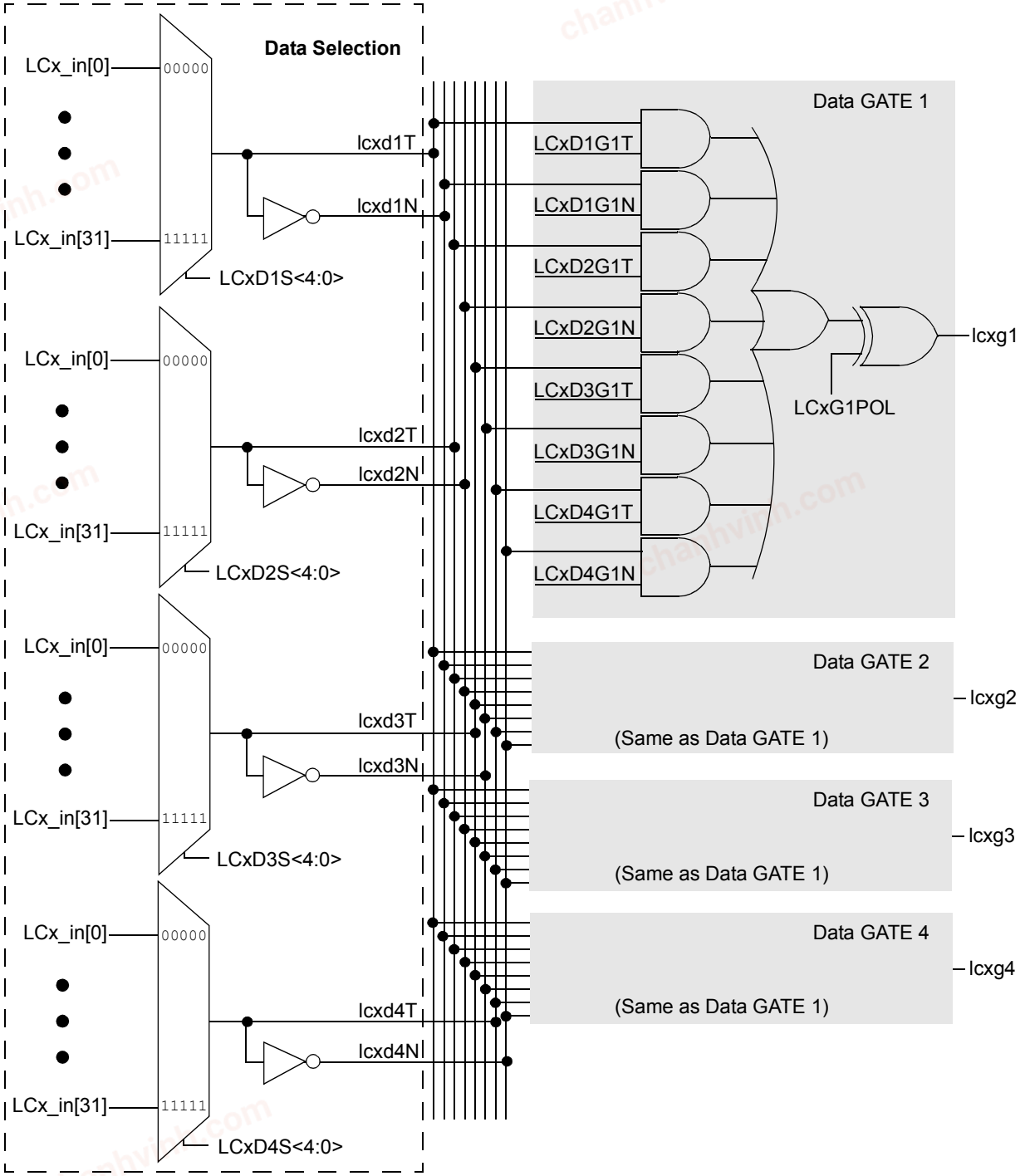


**Note:** All controls are undefined at power-up.

chanhvinh.com



**FIGURE 19-3: PROGRAMMABLE LOGIC FUNCTIONS**

**AND - OR**

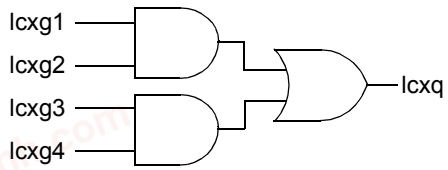


LCxMODE<2:0>= 000

**OR - XOR**

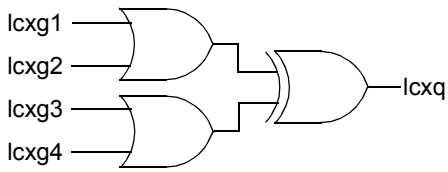


LCxMODE<2:0>= 001

**4-Input AND**

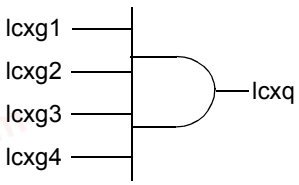


LCxMODE<2:0>= 010

**S-R Latch**

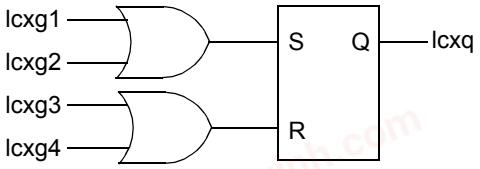


LCxMODE<2:0>= 011

**1-Input D Flip-Flop with S and R**

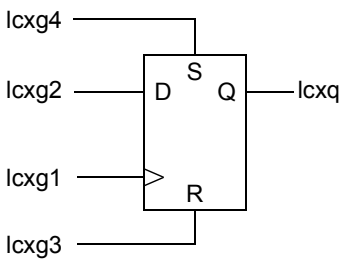


LCxMODE<2:0>= 100

**2-Input D Flip-Flop with R**

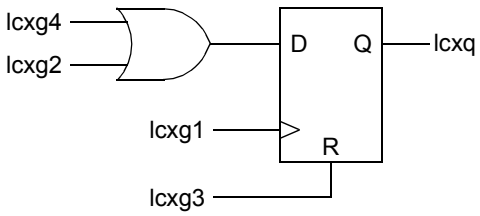


LCxMODE<2:0>= 101

**J-K Flip-Flop with R**

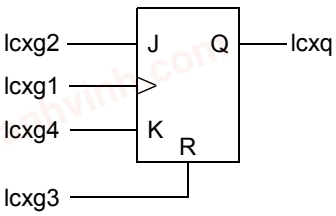


LCxMODE<2:0>= 110

**1-Input Transparent Latch with S and R**

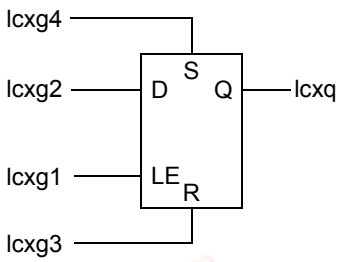


LCxMODE<2:0>= 111

 © 2013 Microchip Technology Inc.

chanhvinh.com



## 19.6 Register Definitions: CLC Control

**REGISTER 19-1: CLCxCON: CONFIGURABLE LOGIC CELL CONTROL REGISTER**

| R/W-0/0 | U-0 | R-0/0 | R/W-0/0 | R/W-0/0 | R/W-0/0 | R/W-0/0 | R/W-0/0 |
|---|---|---|---|---|---|---|---|
| LCxEN | — | LCxOUT | LCxINTP | LCxINTN | LCxMODE<2:0> | | |
| bit 7 | | | | | | | bit 0 |

| **Legend:** | | |
|---|---|---|
| R = Readable bit | W = Writable bit | U = Unimplemented bit, read as ‘0’ |
| u = Bit is unchanged | x = Bit is unknown | -n/n = Value at POR and BOR/Value at all other Resets |
| ‘1’ = Bit is set | ‘0’ = Bit is cleared | |

bit 7 **LCxEN:** Configurable Logic Cell Enable bit
1 = Configurable logic cell is enabled and mixing input signals
0 = Configurable logic cell is disabled and has logic zero output

bit 6 **Unimplemented:** Read as ‘0’

bit 5 **LCxOUT:** Configurable Logic Cell Data Output bit
Read-only: logic cell output data, after LCxPOL; sampled from lcx_out wire.

bit 4 **LCxINTP:** Configurable Logic Cell Positive Edge Going Interrupt Enable bit
1 = CLCxIF will be set when a rising edge occurs on lcx_out
0 = CLCxIF will not be set

bit 3 **LCxINTN:** Configurable Logic Cell Negative Edge Going Interrupt Enable bit
1 = CLCxIF will be set when a falling edge occurs on lcx_out
0 = CLCxIF will not be set

bit 2-0 **LCxMODE<2:0>:** Configurable Logic Cell Functional Mode bits
111 = Cell is 1-input transparent latch with S and R
110 = Cell is J-K flip-flop with R
101 = Cell is 2-input D flip-flop with R
100 = Cell is 1-input D flip-flop with S and R
011 = Cell is S-R latch
010 = Cell is 4-input AND
001 = Cell is OR-XOR
000 = Cell is AND-OR

chanhvinh.com



**REGISTER 19-2: CLCxPOL: SIGNAL POLARITY CONTROL REGISTER**

| R/W-0/0 | U-0 | U-0 | U-0 | R/W-x/u | R/W-x/u | R/W-x/u | R/W-x/u |
|---|---|---|---|---|---|---|---|
| LCxPOL | — | — | — | LCxG4POL | LCxG3POL | LCxG2POL | LCxG1POL |
| bit 7 | | | | | | | bit 0 |

| **Legend:** | | |
|---|---|---|
| R = Readable bit | W = Writable bit | U = Unimplemented bit, read as '0' |
| u = Bit is unchanged | x = Bit is unknown | -n/n = Value at POR and BOR/Value at all other Resets |
| '1' = Bit is set | '0' = Bit is cleared | |

bit 7 **LCxPOL:** LCOUT Polarity Control bit
1 = The output of the logic cell is inverted
0 = The output of the logic cell is not inverted

bit 6-4 **Unimplemented:** Read as '0'

bit 3 **LCxG4POL:** Gate 4 Output Polarity Control bit
1 = The output of gate 4 is inverted when applied to the logic cell
0 = The output of gate 4 is not inverted

bit 2 **LCxG3POL:** Gate 3 Output Polarity Control bit
1 = The output of gate 3 is inverted when applied to the logic cell
0 = The output of gate 3 is not inverted

bit 1 **LCxG2POL:** Gate 2 Output Polarity Control bit
1 = The output of gate 2 is inverted when applied to the logic cell
0 = The output of gate 2 is not inverted

bit 0 **LCxG1POL:** Gate 1 Output Polarity Control bit
1 = The output of gate 1 is inverted when applied to the logic cell
0 = The output of gate 1 is not inverted

 © 2013 Microchip Technology Inc.

chanhvinh.com



**REGISTER 19-3: CLCxSEL0: GENERIC CLCx DATA 1 SELECT REGISTER**

| U-0 | U-0 | U-0 | R/W-x/u | R/W-x/u | R/W-x/u | R/W-x/u | R/W-x/u |
|---|---|---|---|---|---|---|---|
| — | — | — | LCxD1S<4:0> | | | | |
| bit 7 | | | | | | | bit 0 |

| Legend: | | |
|---|---|---|
| R = Readable bit | W = Writable bit | U = Unimplemented bit, read as '0' |
| u = Bit is unchanged | x = Bit is unknown | -n/n = Value at POR and BOR/Value at all other Resets |
| '1' = Bit is set | '0' = Bit is cleared | |

bit 7-5 **Unimplemented:** Read as '0'

bit 4-0 **LCxD1S<4:0>:** CLCx Data1 Input Selection bits
See Table 19-1.

**REGISTER 19-4: CLCxSEL1: GENERIC CLCx DATA 2 SELECT REGISTER**

| U-0 | U-0 | U-0 | R/W-x/u | R/W-x/u | R/W-x/u | R/W-x/u | R/W-x/u |
|---|---|---|---|---|---|---|---|
| — | — | — | LCxD2S<4:0> | | | | |
| bit 7 | | | | | | | bit 0 |

| Legend: | | |
|---|---|---|
| R = Readable bit | W = Writable bit | U = Unimplemented bit, read as '0' |
| u = Bit is unchanged | x = Bit is unknown | -n/n = Value at POR and BOR/Value at all other Resets |
| '1' = Bit is set | '0' = Bit is cleared | |

bit 7-5 **Unimplemented:** Read as '0'

bit 4-0 **LCxD2S<4:0>:** CLCx Data 2 Input Selection bits
See Table 19-1.

**REGISTER 19-5: CLCxSEL2: GENERIC CLCx DATA 3 SELECT REGISTER**

| U-0 | U-0 | U-0 | R/W-x/u | R/W-x/u | R/W-x/u | R/W-x/u | R/W-x/u |
|---|---|---|---|---|---|---|---|
| — | — | — | LCxD3S<4:0> | | | | |
| bit 7 | | | | | | | bit 0 |

| Legend: | | |
|---|---|---|
| R = Readable bit | W = Writable bit | U = Unimplemented bit, read as '0' |
| u = Bit is unchanged | x = Bit is unknown | -n/n = Value at POR and BOR/Value at all other Resets |
| '1' = Bit is set | '0' = Bit is cleared | |

bit 7-5 **Unimplemented:** Read as '0'

bit 4-0 **LCxD3S<4:0>:** CLCx Data 3 Input Selection bits
See Table 19-1.

**REGISTER 19-6: CLCxSEL3: GENERIC CLCx DATA 4 SELECT REGISTER**

| U-0 | U-0 | U-0 | R/W-x/u | R/W-x/u | R/W-x/u | R/W-x/u | R/W-x/u |
|---|---|---|---|---|---|---|---|
| — | — | — | LCxD4S<4:0> | | | | |
| bit 7 | | | | | | | bit 0 |

| Legend: | | |
|---|---|---|
| R = Readable bit | W = Writable bit | U = Unimplemented bit, read as '0' |
| u = Bit is unchanged | x = Bit is unknown | -n/n = Value at POR and BOR/Value at all other Resets |
| '1' = Bit is set | '0' = Bit is cleared | |

bit 7-5 **Unimplemented:** Read as '0'

bit 4-0 **LCxD4S<4:0>:** CLCx Data 4 Input Selection bits
See Table 19-1.

chanhvinh.com



**REGISTER 19-7: CLCxGLS0: GATE 1 LOGIC SELECT REGISTER**

| R/W-x/u | R/W-x/u | R/W-x/u | R/W-x/u | R/W-x/u | R/W-x/u | R/W-x/u | R/W-x/u |
|---|---|---|---|---|---|---|---|
| LCxG1D4T | LCxG1D4N | LCxG1D3T | LCxG1D3N | LCxG1D2T | LCxG1D2N | LCxG1D1T | LCxG1D1N |
| bit 7 | | | | | | | bit 0 |

| **Legend:** | | |
|---|---|---|
| R = Readable bit | W = Writable bit | U = Unimplemented bit, read as '0' |
| u = Bit is unchanged | x = Bit is unknown | -n/n = Value at POR and BOR/Value at all other Resets |
| '1' = Bit is set | '0' = Bit is cleared | |

bit 7 **LCxG1D4T:** Gate 1 Data 4 True (non-inverted) bit
1 = lcxd4T is gated into lcxg1
0 = lcxd4T is not gated into lcxg1

bit 6 **LCxG1D4N:** Gate 1 Data 4 Negated (inverted) bit
1 = lcxd4N is gated into lcxg1
0 = lcxd4N is not gated into lcxg1

bit 5 **LCxG1D3T:** Gate 1 Data 3 True (non-inverted) bit
1 = lcxd3T is gated into lcxg1
0 = lcxd3T is not gated into lcxg1

bit 4 **LCxG1D3N:** Gate 1 Data 3 Negated (inverted) bit
1 = lcxd3N is gated into lcxg1
0 = lcxd3N is not gated into lcxg1

bit 3 **LCxG1D2T:** Gate 1 Data 2 True (non-inverted) bit
1 = lcxd2T is gated into lcxg1
0 = lcxd2T is not gated into lcxg1

bit 2 **LCxG1D2N:** Gate 1 Data 2 Negated (inverted) bit
1 = lcxd2N is gated into lcxg1
0 = lcxd2N is not gated into lcxg1

bit 1 **LCxG1D1T:** Gate 1 Data 1 True (non-inverted) bit
1 = lcxd1T is gated into lcxg1
0 = lcxd1T is not gated into lcxg1

bit 0 **LCxG1D1N:** Gate 1 Data 1 Negated (inverted) bit
1 = lcxd1N is gated into lcxg1
0 = lcxd1N is not gated into lcxg1

 © 2013 Microchip Technology Inc.

chanhvinh.com



**REGISTER 19-8: CLCxGLS1: GATE 2 LOGIC SELECT REGISTER**

| R/W-x/u | R/W-x/u | R/W-x/u | R/W-x/u | R/W-x/u | R/W-x/u | R/W-x/u | R/W-x/u |
|---|---|---|---|---|---|---|---|
| LCxG2D4T | LCxG2D4N | LCxG2D3T | LCxG2D3N | LCxG2D2T | LCxG2D2N | LCxG2D1T | LCxG2D1N |
| bit 7 | | | | | | | bit 0 |

| **Legend:** | | |
|---|---|---|
| R = Readable bit | W = Writable bit | U = Unimplemented bit, read as '0' |
| u = Bit is unchanged | x = Bit is unknown | -n/n = Value at POR and BOR/Value at all other Resets |
| '1' = Bit is set | '0' = Bit is cleared | |

bit 7 **LCxG2D4T:** Gate 2 Data 4 True (non-inverted) bit
1 = lcxd4T is gated into lcxg2
0 = lcxd4T is not gated into lcxg2

bit 6 **LCxG2D4N:** Gate 2 Data 4 Negated (inverted) bit
1 = lcxd4N is gated into lcxg2
0 = lcxd4N is not gated into lcxg2

bit 5 **LCxG2D3T:** Gate 2 Data 3 True (non-inverted) bit
1 = lcxd3T is gated into lcxg2
0 = lcxd3T is not gated into lcxg2

bit 4 **LCxG2D3N:** Gate 2 Data 3 Negated (inverted) bit
1 = lcxd3N is gated into lcxg2
0 = lcxd3N is not gated into lcxg2

bit 3 **LCxG2D2T:** Gate 2 Data 2 True (non-inverted) bit
1 = lcxd2T is gated into lcxg2
0 = lcxd2T is not gated into lcxg2

bit 2 **LCxG2D2N:** Gate 2 Data 2 Negated (inverted) bit
1 = lcxd2N is gated into lcxg2
0 = lcxd2N is not gated into lcxg2

bit 1 **LCxG2D1T:** Gate 2 Data 1 True (non-inverted) bit
1 = lcxd1T is gated into lcxg2
0 = lcxd1T is not gated into lcxg2

bit 0 **LCxG2D1N:** Gate 2 Data 1 Negated (inverted) bit
1 = lcxd1N is gated into lcxg2
0 = lcxd1N is not gated into lcxg2

chanhvinh.com



**REGISTER 19-9: CLCxGLS2: GATE 3 LOGIC SELECT REGISTER**

| R/W-x/u | R/W-x/u | R/W-x/u | R/W-x/u | R/W-x/u | R/W-x/u | R/W-x/u | R/W-x/u |
|---|---|---|---|---|---|---|---|
| LCxG3D4T | LCxG3D4N | LCxG3D3T | LCxG3D3N | LCxG3D2T | LCxG3D2N | LCxG3D1T | LCxG3D1N |
| bit 7 | | | | | | | bit 0 |

| **Legend:** | | |
|---|---|---|
| R = Readable bit | W = Writable bit | U = Unimplemented bit, read as '0' |
| u = Bit is unchanged | x = Bit is unknown | -n/n = Value at POR and BOR/Value at all other Resets |
| '1' = Bit is set | '0' = Bit is cleared | |

bit 7 **LCxG3D4T:** Gate 3 Data 4 True (non-inverted) bit
1 = lcxd4T is gated into lcxg3
0 = lcxd4T is not gated into lcxg3

bit 6 **LCxG3D4N:** Gate 3 Data 4 Negated (inverted) bit
1 = lcxd4N is gated into lcxg3
0 = lcxd4N is not gated into lcxg3

bit 5 **LCxG3D3T:** Gate 3 Data 3 True (non-inverted) bit
1 = lcxd3T is gated into lcxg3
0 = lcxd3T is not gated into lcxg3

bit 4 **LCxG3D3N:** Gate 3 Data 3 Negated (inverted) bit
1 = lcxd3N is gated into lcxg3
0 = lcxd3N is not gated into lcxg3

bit 3 **LCxG3D2T:** Gate 3 Data 2 True (non-inverted) bit
1 = lcxd2T is gated into lcxg3
0 = lcxd2T is not gated into lcxg3

bit 2 **LCxG3D2N:** Gate 3 Data 2 Negated (inverted) bit
1 = lcxd2N is gated into lcxg3
0 = lcxd2N is not gated into lcxg3

bit 1 **LCxG3D1T:** Gate 3 Data 1 True (non-inverted) bit
1 = lcxd1T is gated into lcxg3
0 = lcxd1T is not gated into lcxg3

bit 0 **LCxG3D1N:** Gate 3 Data 1 Negated (inverted) bit
1 = lcxd1N is gated into lcxg3
0 = lcxd1N is not gated into lcxg3

 © 2013 Microchip Technology Inc.

chanhvinh.com



**REGISTER 19-10: CLCxGLS3: GATE 4 LOGIC SELECT REGISTER**

| R/W-x/u | R/W-x/u | R/W-x/u | R/W-x/u | R/W-x/u | R/W-x/u | R/W-x/u | R/W-x/u |
|---|---|---|---|---|---|---|---|
| LCxG4D4T | LCxG4D4N | LCxG4D3T | LCxG4D3N | LCxG4D2T | LCxG4D2N | LCxG4D1T | LCxG4D1N |
| bit 7 | | | | | | | bit 0 |

| **Legend:** | | |
|---|---|---|
| R = Readable bit | W = Writable bit | U = Unimplemented bit, read as '0' |
| u = Bit is unchanged | x = Bit is unknown | -n/n = Value at POR and BOR/Value at all other Resets |
| '1' = Bit is set | '0' = Bit is cleared | |

bit 7 **LCxG4D4T:** Gate 4 Data 4 True (non-inverted) bit
1 = lcxd4T is gated into lcxg4
0 = lcxd4T is not gated into lcxg4

bit 6 **LCxG4D4N:** Gate 4 Data 4 Negated (inverted) bit
1 = lcxd4N is gated into lcxg4
0 = lcxd4N is not gated into lcxg4

bit 5 **LCxG4D3T:** Gate 4 Data 3 True (non-inverted) bit
1 = lcxd3T is gated into lcxg4
0 = lcxd3T is not gated into lcxg4

bit 4 **LCxG4D3N:** Gate 4 Data 3 Negated (inverted) bit
1 = lcxd3N is gated into lcxg4
0 = lcxd3N is not gated into lcxg4

bit 3 **LCxG4D2T:** Gate 4 Data 2 True (non-inverted) bit
1 = lcxd2T is gated into lcxg4
0 = lcxd2T is not gated into lcxg4

bit 2 **LCxG4D2N:** Gate 4 Data 2 Negated (inverted) bit
1 = lcxd2N is gated into lcxg4
0 = lcxd2N is not gated into lcxg4

bit 1 **LCxG4D1T:** Gate 4 Data 1 True (non-inverted) bit
1 = lcxd1T is gated into lcxg4
0 = lcxd1T is not gated into lcxg4

bit 0 **LCxG4D1N:** Gate 4 Data 1 Negated (inverted) bit
1 = lcxd1N is gated into lcxg4
0 = lcxd1N is not gated into lcxg4

chanhvinh.com



**REGISTER 19-11: CLCDATA: CLC DATA OUTPUT**

| U-0 | U-0 | U-0 | U-0 | U-0 | R-0 | R-0 | R-0 |
|---|---|---|---|---|---|---|---|
| — | — | — | — | — | MLC3OUT | MLC2OUT | MLC1OUT |
| bit 7 | | | | | | | bit 0 |

| **Legend:** | | |
|---|---|---|
| R = Readable bit | W = Writable bit | U = Unimplemented bit, read as ‘0’ |
| u = Bit is unchanged | x = Bit is unknown | -n/n = Value at POR and BOR/Value at all other Resets |
| ‘1’ = Bit is set | ‘0’ = Bit is cleared | |

| | |
|---|---|
| bit 7-3 | Unimplemented: Read as ‘0’ |
| bit 2 | MLC3OUT: Mirror copy of LC3OUT bit |
| bit 1 | MLC2OUT: Mirror copy of LC2OUT bit |
| bit 0 | MLC1OUT: Mirror copy of LC1OUT bit |

 © 2013 Microchip Technology Inc.

chanhvinh.com



**TABLE 19-3: SUMMARY OF REGISTERS ASSOCIATED WITH CLCx**

| Name | Bit7 | Bit6 | Bit5 | Bit4 | Bit3 | Bit2 | Bit1 | Bit0 | Register on Page |
|---|---|---|---|---|---|---|---|---|---|
| ANSELA | — | — | — | ANSA4 | — | ANSA2 | ANSA1 | ANSA0 | 125 |
| ANSELB(1) | — | — | ANSB5 | ANSB4 | — | — | — | — | 131 |
| ANSELC | ANSC7(1) | ANSC6(1) | ANSC5(2) | ANSC4(2) | ANSC3 | ANSC2 | ANSC1 | ANSC0 | 136 |
| CLC1CON | LC1EN | — | LC1OUT | LC1INTP | LC1INTN | LC1MODE<2:0> | | | 213 |
| CLC2CON | LC2EN | — | LC2OUT | LC2INTP | LC2INTN | LC2MODE<2:0> | | | 213 |
| CLC3CON | LC3EN | — | LC3OUT | LC3INTP | LC3INTN | LC3MODE<2:0> | | | 213 |
| CLCDATA | — | — | — | — | — | MLC3OUT | MLC2OUT | MLC1OUT | 220 |
| CLC1GLS0 | LC1G1D4T | LC1G1D4N | LC1G1D3T | LC1G1D3N | LC1G1D2T | LC1G1D2N | LC1G1D1T | LC1G1D1N | 216 |
| CLC1GLS1 | LC1G2D4T | LC1G2D4N | LC1G2D3T | LC1G2D3N | LC1G2D2T | LC1G2D2N | LC1G2D1T | LC1G2D1N | 217 |
| CLC1GLS2 | LC1G3D4T | LC1G3D4N | LC1G3D3T | LC1G3D3N | LC1G3D2T | LC1G3D2N | LC1G3D1T | LC1G3D1N | 218 |
| CLC1GLS3 | LC1G4D4T | LC1G4D4N | LC1G4D3T | LC1G4D3N | LC1G4D2T | LC1G4D2N | LC1G4D1T | LC1G4D1N | 219 |
| CLC1POL | LC1POL | — | — | — | LC1G4POL | LC1G3POL | LC1G2POL | LC1G1POL | 214 |
| CLC1SEL0 | — | — | — | LC1D1S<4:0> | | | | | 215 |
| CLC1SEL1 | — | — | — | LC1D2S<4:0> | | | | | 215 |
| CLC1SEL2 | — | — | — | LC1D3S<4:0> | | | | | 215 |
| CLC1SEL3 | — | — | — | LC1D4S<4:0> | | | | | 215 |
| CLC2GLS0 | LC2G1D4T | LC2G1D4N | LC2G1D3T | LC2G1D3N | LC2G1D2T | LC2G1D2N | LC2G1D1T | LC2G1D1N | 216 |
| CLC2GLS1 | LC2G2D4T | LC2G2D4N | LC2G2D3T | LC2G2D3N | LC2G2D2T | LC2G2D2N | LC2G2D1T | LC2G2D1N | 217 |
| CLC2GLS2 | LC2G3D4T | LC2G3D4N | LC2G3D3T | LC2G3D3N | LC2G3D2T | LC2G3D2N | LC2G3D1T | LC2G3D1N | 218 |
| CLC2GLS3 | LC2G4D4T | LC2G4D4N | LC2G4D3T | LC2G4D3N | LC2G4D2T | LC2G4D2N | LC2G4D1T | LC2G4D1N | 219 |
| CLC2POL | LC2POL | — | — | — | LC2G4POL | LC2G3POL | LC2G2POL | LC2G1POL | 214 |
| CLC2SEL0 | — | — | — | LC2D1S<4:0> | | | | | 215 |
| CLC2SEL1 | — | — | — | LC2D2S<4:0> | | | | | 215 |
| CLC2SEL2 | — | — | — | LC2D3S<4:0> | | | | | 215 |
| CLC2SEL3 | — | — | — | LC2D4S<4:0> | | | | | 215 |
| CLC3GLS0 | LC3G1D4T | LC3G1D4N | LC3G1D3T | LC3G1D3N | LC3G1D2T | LC3G1D2N | LC3G1D1T | LC3G1D1N | 216 |
| CLC3GLS1 | LC3G2D4T | LC3G2D4N | LC3G2D3T | LC3G2D3N | LC3G2D2T | LC3G2D2N | LC3G2D1T | LC3G2D1N | 217 |
| CLC3GLS2 | LC3G3D4T | LC3G3D4N | LC3G3D3T | LC3G3D3N | LC3G3D2T | LC3G3D2N | LC3G3D1T | LC3G3D1N | 218 |
| CLC3GLS3 | LC3G4D4T | LC3G4D4N | LC3G4D3T | LC3G4D3N | LC3G4D2T | LC3G4D2N | LC3G4D1T | LC3G4D1N | 219 |
| CLC3POL | LC3POL | — | — | — | LC3G4POL | LC3G3POL | LC3G2POL | LC3G1POL | 214 |
| CLC3SEL0 | — | — | — | LC3D1S<4:0> | | | | | 215 |
| CLC3SEL1 | — | — | — | LC3D2S<4:0> | | | | | 215 |
| CLC3SEL2 | — | — | — | LC3D3S<4:0> | | | | | 215 |
| CLC3SEL3 | — | — | — | LC3D4S<4:0> | | | | | 215 |
| CLCxPPS | — | — | — | CLCxPPS<4:0> | | | | | 141, 142 |
| INTCON | GIE | PEIE | TMR0IE | INTE | IOCIE | TMR0IF | INTF | IOCIF | 86 |
| PIE3 | — | — | COGIE | ZCDIE | — | CLC3IE | CLC2IE | CLC1IE | 89 |
| PIR3 | — | — | COGIF | ZCDIF | — | CLC3IF | CLC2IF | CLC1IF | 92 |
| RxyPPS | — | — | — | RxyPPS<4:0> | | | | | 143 |
| TRISA | — | — | TRISA5 | TRISA4 | —(3) | TRISA2 | TRISA1 | TRISA0 | 124 |
| TRISB(4) | TRISB7 | TRISB6 | TRISB5 | TRISB4 | — | — | — | — | 130 |
| TRISC | TRISC7(4) | TRISC6(4) | TRISC5 | TRISC4 | TRISC3 | TRISC2 | TRISC1 | TRISC0 | 135 |

**Legend:** — = unimplemented read as '0'. Shaded cells are not used for CLC module.

**Note 1:** PIC16(L)F1708 only.

**2:** PIC16(L)F1704 only.

**3:** Unimplemented, read as '1'.

chanhvinh.com



**NOTES:**

chanhvinh.com

 © 2013 Microchip Technology Inc.

chanhvinh.com



## 20.0 ANALOG-TO-DIGITAL CONVERTER (ADC) MODULE

The Analog-to-Digital Converter (ADC) allows conversion of an analog input signal to a 10-bit binary representation of that signal. This device uses analog inputs, which are multiplexed into a single sample and hold circuit. The output of the sample and hold is connected to the input of the converter. The converter generates a 10-bit binary result via successive approximation and stores the conversion result into the ADC result registers (ADRESH:ADRESL register pair). Figure 20-1 shows the block diagram of the ADC.

The ADC voltage reference is software selectable to be either internally generated or externally supplied.

The ADC can generate an interrupt upon completion of a conversion. This interrupt can be used to wake-up the device from Sleep.

**FIGURE 20-1: ADC BLOCK DIAGRAM**

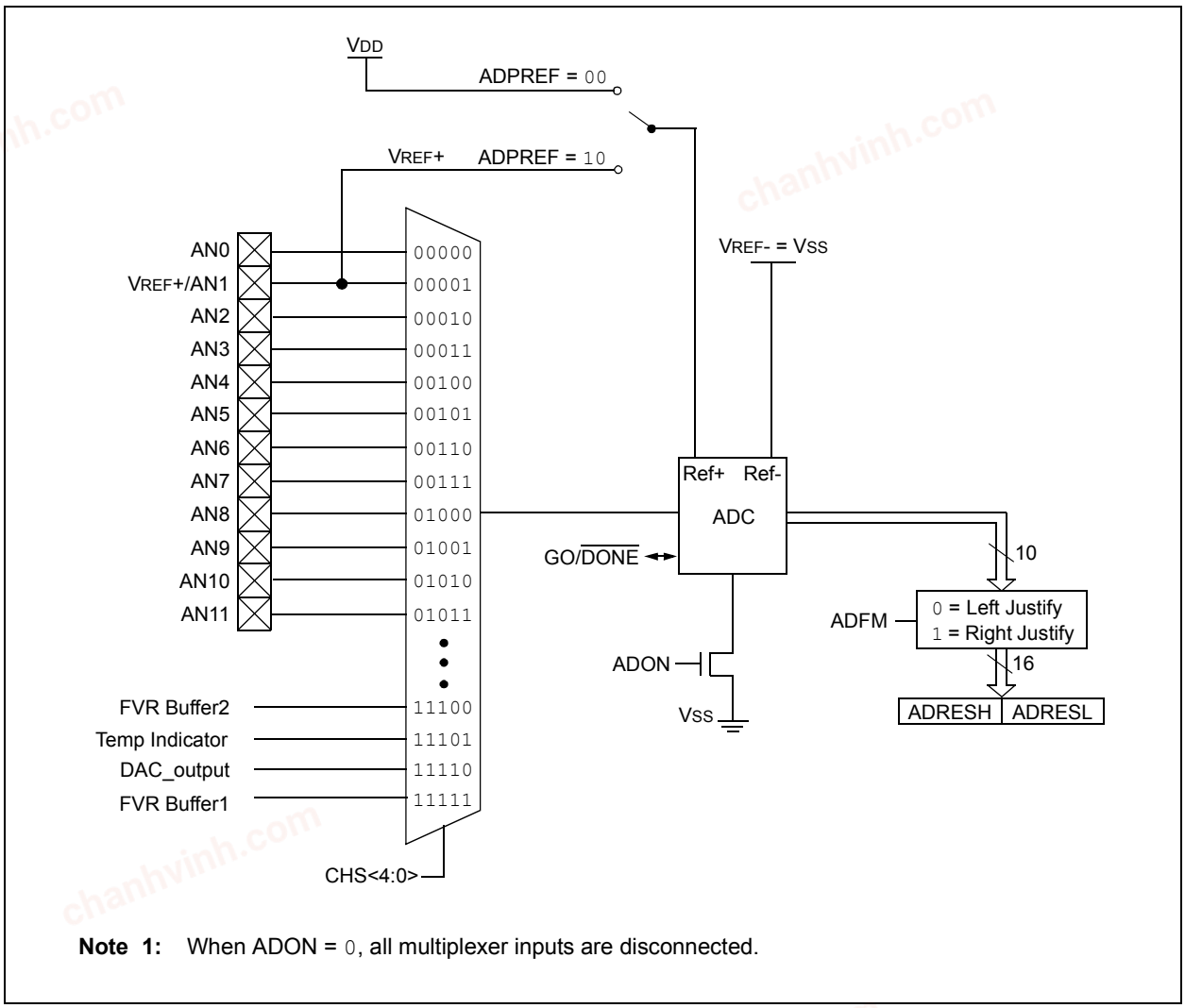


**Note 1:** When ADON = 0, all multiplexer inputs are disconnected.

chanhvinh.com



## 20.1 ADC Configuration

When configuring and using the ADC the following functions must be considered:

- Port configuration
- Channel selection
- ADC voltage reference selection
- ADC conversion clock source
- Interrupt control
- Result formatting

### 20.1.1 PORT CONFIGURATION

The ADC can be used to convert both analog and digital signals. When converting analog signals, the I/O pin should be configured for analog by setting the associated TRIS and ANSEL bits. Refer to **Section 11.0 "I/O Ports"** for more information.

| | |
|---|---|
| **Note:** | Analog voltages on any pin that is defined as a digital input may cause the input buffer to conduct excess current. |

### 20.1.2 CHANNEL SELECTION

There are up to 17 channel selections available:

- AN<13:8, 4:0> pins (PIC16(L)F1704 only)
- AN<21,13:0> pins (PIC16(L)F1708 only)
- Temperature Indicator
- DAC_output
- FVR_buffer1

The CHS bits of the ADCON0 register (Register 20-1) determine which channel is connected to the sample and hold circuit.

When changing channels, a delay is required before starting the next conversion. Refer to **Section 20.2 "ADC Operation"** for more information.

### 20.1.3 ADC VOLTAGE REFERENCE

The ADPREF bits of the ADCON1 register provides control of the positive voltage reference. The positive voltage reference can be:

- $V_{REF+}$ pin
- $V_{DD}$
- FVR 2.048V
- FVR 4.096V (Not available on LF devices)
- $V_{SS}$

See **Section 20.0 "Analog-to-Digital Converter (ADC) Module"** for more details on the Fixed Voltage Reference.

### 20.1.4 CONVERSION CLOCK

The source of the conversion clock is software selectable via the ADCS bits of the ADCON1 register. There are seven possible clock options:

- $F_{OSC}/2$
- $F_{OSC}/4$
- $F_{OSC}/8$
- $F_{OSC}/16$
- $F_{OSC}/32$
- $F_{OSC}/64$
- FRC (internal RC oscillator)

The time to complete one bit conversion is defined as $T_{AD}$. One full 10-bit conversion requires 11.5 $T_{AD}$ periods as shown in Figure 20-2.

For correct conversion, the appropriate $T_{AD}$ specification must be met. Refer to Table 32-16: ADC Conversion Requirements for more information. Table 20-1 gives examples of appropriate ADC clock selections.

| | |
|---|---|
| **Note:** | Unless using the FRC, any changes in the system clock frequency will change the ADC clock frequency, which may adversely affect the ADC result. |

 © 2013 Microchip Technology Inc.

chanhvinh.com



**TABLE 20-1: ADC CLOCK PERIOD (TAD) VS. DEVICE OPERATING FREQUENCIES**

| ADC Clock Period (TAD) | | Device Frequency (FOSC) | | | | | |
|---|---|---|---|---|---|---|---|
| ADC Clock Source | ADCS<2:0> | 32 MHz | 20 MHz | 16 MHz | 8 MHz | 4 MHz | 1 MHz |
| FOSC/2 | 000 | 62.5ns(2) | 100 ns(2) | 125 ns(2) | 250 ns(2) | 500 ns(2) | 2.0 µs |
| FOSC/4 | 100 | 125 ns(2) | 200 ns(2) | 250 ns(2) | 500 ns(2) | 1.0 µs | 4.0 µs |
| FOSC/8 | 001 | 0.5 µs(2) | 400 ns(2) | 0.5 µs(2) | 1.0 µs | 2.0 µs | 8.0 µs(3) |
| FOSC/16 | 101 | 800 ns | 800 ns | 1.0 µs | 2.0 µs | 4.0 µs | 16.0 µs(3) |
| FOSC/32 | 010 | 1.0 µs | 1.6 µs | 2.0 µs | 4.0 µs | 8.0 µs(3) | 32.0 µs(2) |
| FOSC/64 | 110 | 2.0 µs | 3.2 µs | 4.0 µs | 8.0 µs(3) | 16.0 µs(2) | 64.0 µs(2) |
| FRC | x11 | 1.0-6.0 µs(1,4) | 1.0-6.0 µs(1,4) | 1.0-6.0 µs(1,4) | 1.0-6.0 µs(1,4) | 1.0-6.0 µs(1,4) | 1.0-6.0 µs(1,4) |

**Legend:** Shaded cells are outside of recommended range.

**Note 1:** See TAD parameter for FRC source typical TAD value.

**2:** These values violate the required TAD time.

**3:** Outside the recommended TAD time.

**4:** The ADC clock period (TAD) and total ADC conversion time can be minimized when the ADC clock is derived from the system clock FOSC. However, the FRC oscillator source must be used when conversions are to be performed with the device in Sleep mode.

**FIGURE 20-2: ANALOG-TO-DIGITAL CONVERSION TAD CYCLES**

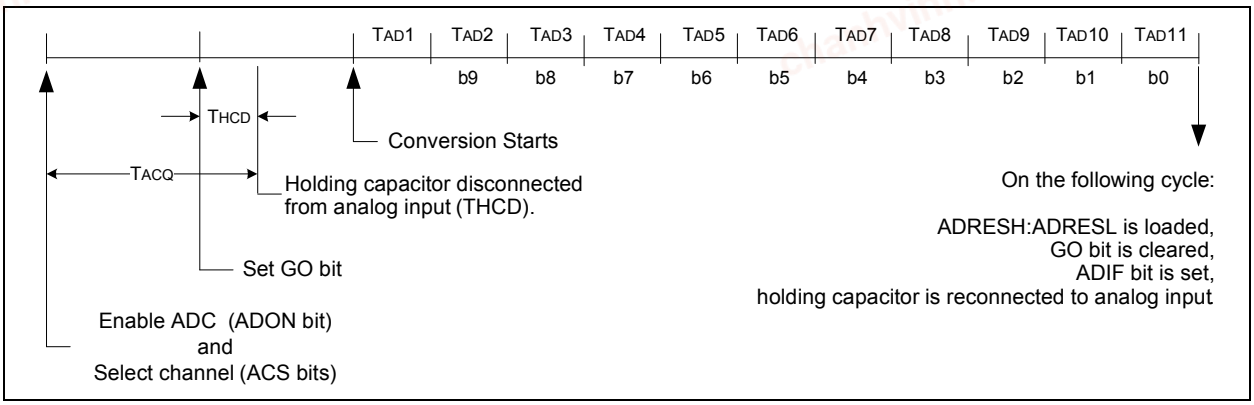

chanhvinh.com



### 20.1.5 INTERRUPTS

The ADC module allows for the ability to generate an interrupt upon completion of an Analog-to-Digital conversion. The ADC Interrupt Flag is the ADIF bit in the PIR1 register. The ADC Interrupt Enable is the ADIE bit in the PIE1 register. The ADIF bit must be cleared in software.

| | |
|---|---|
| **Note 1:** | The ADIF bit is set at the completion of every conversion, regardless of whether or not the ADC interrupt is enabled. |
| **2:** | The ADC operates during Sleep only when the FRC oscillator is selected. |

This interrupt can be generated while the device is operating or while in Sleep. If the device is in Sleep, the interrupt will wake-up the device. Upon waking from Sleep, the next instruction following the SLEEP instruction is always executed. If the user is attempting to wake-up from Sleep and resume in-line code execution, the ADIE bit of the PIE1 register and the PEIE bit of the INTCON register must both be set and the GIE bit of the INTCON register must be cleared. If all three of these bits are set, the execution will switch to the Interrupt Service Routine.

### 20.1.6 RESULT FORMATTING

The 10-bit ADC conversion result can be supplied in two formats, left justified or right justified. The ADFM bit of the ADCON1 register controls the output format.

Figure 20-3 shows the two output formats.

**FIGURE 20-3: 10-BIT ADC CONVERSION RESULT FORMAT**

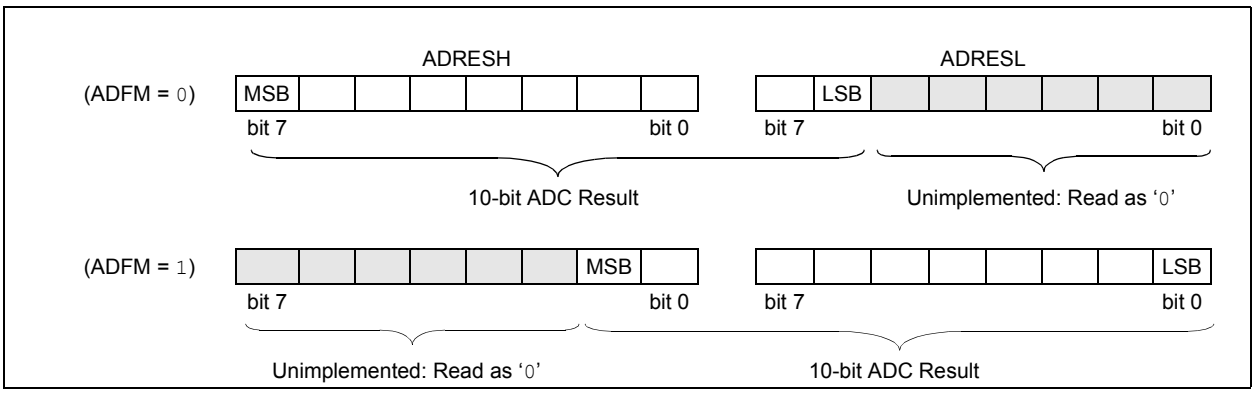


 © 2013 Microchip Technology Inc.

chanhvinh.com



## 20.2 ADC Operation

### 20.2.1 STARTING A CONVERSION

To enable the ADC module, the ADON bit of the ADCON0 register must be set to a '1'. Setting the GO/$\overline{\text{DONE}}$ bit of the ADCON0 register to a '1' will start the Analog-to-Digital conversion.

| | |
|---|---|
| **Note:** | The GO/$\overline{\text{DONE}}$ bit should not be set in the same instruction that turns on the ADC. Refer to **Section 20.2.6 "ADC Conversion Procedure"**. |

### 20.2.2 COMPLETION OF A CONVERSION

When the conversion is complete, the ADC module will:

- Clear the GO/$\overline{\text{DONE}}$ bit
- Set the ADIF Interrupt Flag bit
- Update the ADRESH and ADRESL registers with new conversion result

### 20.2.3 TERMINATING A CONVERSION

If a conversion must be terminated before completion, the GO/$\overline{\text{DONE}}$ bit can be cleared in software. The ADRESH and ADRESL registers will be updated with the partially complete Analog-to-Digital conversion sample. Incomplete bits will match the last bit converted.

| | |
|---|---|
| **Note:** | A device Reset forces all registers to their Reset state. Thus, the ADC module is turned off and any pending conversion is terminated. |

### 20.2.4 ADC OPERATION DURING SLEEP

The ADC module can operate during Sleep. This requires the ADC clock source to be set to the FRC option. When the FRC oscillator source is selected, the ADC waits one additional instruction before starting the conversion. This allows the SLEEP instruction to be executed, which can reduce system noise during the conversion. If the ADC interrupt is enabled, the device will wake-up from Sleep when the conversion completes. If the ADC interrupt is disabled, the ADC module is turned off after the conversion completes, although the ADON bit remains set.

When the ADC clock source is something other than FRC, a SLEEP instruction causes the present conversion to be aborted and the ADC module is turned off, although the ADON bit remains set.

### 20.2.5 AUTO-CONVERSION TRIGGER

The Auto-conversion Trigger allows periodic ADC measurements without software intervention. When a rising edge of the selected source occurs, the GO/$\overline{\text{DONE}}$ bit is set by hardware.

The Auto-conversion Trigger source is selected with the TRIGSEL<3:0> bits of the ADCON2 register.

Using the Auto-conversion Trigger does not assure proper ADC timing. It is the user's responsibility to ensure that the ADC timing requirements are met.

See Table 20-2 for auto-conversion sources.

**TABLE 20-2: AUTO-CONVERSION SOURCES**

| Source Peripheral | Signal Name |
|---|---|
| CCP1 | |
| CCP2 | |
| Timer0 | T0_overflow |
| Timer1 | T1_overflow |
| Timer2 | T2_match |
| Timer4 | T4_match |
| Timer6 | T6_match |
| Comparator C1 | C1OUT_sync |
| Comparator C2 | C2OUT_sync |
| CLC1 | LC1_out |
| CLC2 | LC2_out |
| CLC3 | LC3_out |

chanhvinh.com



### 20.2.6 ADC CONVERSION PROCEDURE

This is an example procedure for using the ADC to perform an Analog-to-Digital conversion:

1. Configure Port:
   - Disable pin output driver (Refer to the TRIS register)
   - Configure pin as analog (Refer to the ANSEL register)
2. Configure the ADC module:
   - Select ADC conversion clock
   - Configure voltage reference
   - Select ADC input channel
   - Turn on ADC module
3. Configure ADC interrupt (optional):
   - Clear ADC interrupt flag
   - Enable ADC interrupt
   - Enable peripheral interrupt
   - Enable global interrupt(1)
4. Wait the required acquisition time(2).
5. Start conversion by setting the GO/$\overline{\text{DONE}}$ bit.
6. Wait for ADC conversion to complete by one of the following:
   - Polling the GO/$\overline{\text{DONE}}$ bit
   - Waiting for the ADC interrupt (interrupts enabled)
7. Read ADC Result.
8. Clear the ADC interrupt flag (required if interrupt is enabled).

**Note 1:** The global interrupt can be disabled if the user is attempting to wake-up from Sleep and resume in-line code execution.

**2:** Refer to **Section 20.4 "ADC Acquisition Requirements"**.

**EXAMPLE 20-1: ADC CONVERSION**

```
;This code block configures the ADC
;for polling, Vdd and Vss references, FRC
;oscillator and AN0 input.
;
;Conversion start & polling for completion
; are included.
;
BANKSEL   ADCON1       ;
MOVLW     B'11110000'  ;Right justify, FRC
                       ;oscillator
MOVWF     ADCON1       ;Vdd and Vss Vref
BANKSEL   TRISA        ;
BSF       TRISA,0      ;Set RA0 to input
BANKSEL   ANSEL        ;
BSF       ANSEL,0      ;Set RA0 to analog
BANKSEL   ADCON0       ;
MOVLW     B'00000001'  ;Select channel AN0
MOVWF     ADCON0       ;Turn ADC On
CALL      SampleTime   ;Acquisiton delay
BSF       ADCON0,ADGO  ;Start conversion
BTFSC     ADCON0,ADGO  ;Is conversion done?
GOTO      $-1          ;No, test again
BANKSEL   ADRESH       ;
MOVF      ADRESH,W     ;Read upper 2 bits
MOVWF     RESULTHI     ;store in GPR space
BANKSEL   ADRESL       ;
MOVF      ADRESL,W     ;Read lower 8 bits
MOVWF     RESULTLO     ;Store in GPR space
```

 © 2013 Microchip Technology Inc.

chanhvinh.com



## 20.3 Register Definitions: ADC Control

### REGISTER 20-1: ADCON0: ADC CONTROL REGISTER 0

| U-0 | R/W-0/0 | R/W-0/0 | R/W-0/0 | R/W-0/0 | R/W-0/0 | R/W-0/0 | R/W-0/0 |
|---|---|---|---|---|---|---|---|
| — | CHS<4:0> | | | | | GO/$\overline{\text{DONE}}$ | ADON |
| bit 7 | | | | | | | bit 0 |

| Legend: | | |
|---|---|---|
| R = Readable bit | W = Writable bit | U = Unimplemented bit, read as '0' |
| u = Bit is unchanged | x = Bit is unknown | -n/n = Value at POR and BOR/Value at all other Resets |
| '1' = Bit is set | '0' = Bit is cleared | |

bit 7 **Unimplemented:** Read as '0'

bit 6-2 **CHS<4:0>:** Analog Channel Select bits

11111 = FVR (Fixed Voltage Reference) Buffer 1 Output(2)
11110 = DAC_output(1)
11101 = Temperature Indicator(3)
11100 = FVR (Fixed Voltage Reference) Buffer 2 Output(2)
11011 = Reserved. No channel connected.
•
•
•
01100 = Reserved. No channel connected.
01011 = AN11
01010 = AN10
01001 = AN9
01000 = AN8
00111 = AN7
00110 = AN6
00101 = AN5
00100 = AN4
00011 = AN3
00010 = AN2
00001 = AN1
00000 = AN0

bit 1 **GO/$\overline{\text{DONE}}$:** ADC Conversion Status bit

1 = ADC conversion cycle in progress. Setting this bit starts an ADC conversion cycle.
This bit is automatically cleared by hardware when the ADC conversion has completed.
0 = ADC conversion completed/not in progress

bit 0 **ADON:** ADC Enable bit

1 = ADC is enabled
0 = ADC is disabled and consumes no operating current

**Note 1:** See **Section 22.0 "8-Bit Digital-to-Analog Converter (DAC1) Module"** for more information.
**2:** See **Section 14.0 "Fixed Voltage Reference (FVR)"** for more information.
**3:** See **Section 15.0 "Temperature Indicator Module"** for more information.

chanhvinh.com



**REGISTER 20-2: ADCON1: ADC CONTROL REGISTER 1**

| R/W-0/0 | R/W-0/0 | R/W-0/0 | R/W-0/0 | U-0 | U-0 | R/W-0/0 | R/W-0/0 |
|---|---|---|---|---|---|---|---|
| ADFM | ADCS<2:0> | | | — | — | ADPREF<1:0> | |
| bit 7 | | | | | | | bit 0 |

| **Legend:** | | |
|---|---|---|
| R = Readable bit | W = Writable bit | U = Unimplemented bit, read as '0' |
| u = Bit is unchanged | x = Bit is unknown | -n/n = Value at POR and BOR/Value at all other Resets |
| '1' = Bit is set | '0' = Bit is cleared | |

bit 7 **ADFM:** ADC Result Format Select bit
1 = Right justified. Six Most Significant bits of ADRESH are set to '0' when the conversion result is loaded.
0 = Left justified. Six Least Significant bits of ADRESL are set to '0' when the conversion result is loaded.

bit 6-4 **ADCS<2:0>:** ADC Conversion Clock Select bits
111 = FRC (clock supplied from an internal RC oscillator)
110 = FOSC/64
101 = FOSC/16
100 = FOSC/4
011 = FRC (clock supplied from an internal RC oscillator)
010 = FOSC/32
001 = FOSC/8
000 = FOSC/2

bit 3-2 **Unimplemented:** Read as '0'

bit 1-0 **ADPREF<1:0>:** ADC Positive Voltage Reference Configuration bits
11 = VREF+ is connected to internal Fixed Voltage Reference (FVR) module(1)
10 = VREF+ is connected to external VREF+ pin(1)
01 = Reserved
00 = VREF+ is connected to VDD

**Note 1:** When selecting the VREF+ pin as the source of the positive reference, be aware that a minimum voltage specification exists. See Table 32-16: ADC Conversion Requirements for details.

 © 2013 Microchip Technology Inc.

chanhvinh.com



**REGISTER 20-3: ADCON2: ADC CONTROL REGISTER 2**

| R/W-0/0 | R/W-0/0 | R/W-0/0 | R/W-0/0 | U-0 | U-0 | U-0 | U-0 |
|---|---|---|---|---|---|---|---|
| TRIGSEL<3:0>(1) | | | | — | — | — | — |
| bit 7 | | | | | | | bit 0 |

| **Legend:** | | |
|---|---|---|
| R = Readable bit | W = Writable bit | U = Unimplemented bit, read as '0' |
| u = Bit is unchanged | x = Bit is unknown | -n/n = Value at POR and BOR/Value at all other Resets |
| '1' = Bit is set | '0' = Bit is cleared | |

bit 7-4 **TRIGSEL<3:0>:** Auto-Conversion Trigger Selection bits(1)

0000 = No auto-conversion trigger selected
0001 = CCP1
0010 = CCP2
0011 = Timer0 – T0_overflow(2)
0100 = Timer1 – T1_overflow(2)
0101 = Timer2 – T2_match
0110 = Comparator C1 – C1OUT_sync
0111 = Comparator C2 – C2OUT_sync
1000 = CLC1 – LC1_out
1001 = CLC2 – LC2_out
1010 = CLC3 – LC3_out
1011 = Reserved
1100 = Timer4 – T4_match
1101 = Timer6 – T6_match
1110 = Reserved
1111 = Reserved

bit 3-0 **Unimplemented:** Read as '0'

**Note 1:** This is a rising edge sensitive input for all sources.
**2:** Signal also sets its corresponding interrupt flag.

chanhvinh.com



**REGISTER 20-4: ADRESH: ADC RESULT REGISTER HIGH (ADRESH) ADFM = 0**

| R/W-x/u | R/W-x/u | R/W-x/u | R/W-x/u | R/W-x/u | R/W-x/u | R/W-x/u | R/W-x/u |
|---|---|---|---|---|---|---|---|
| ADRES<9:2> | | | | | | | |
| bit 7 | | | | | | | bit 0 |

| **Legend:** | | |
|---|---|---|
| R = Readable bit | W = Writable bit | U = Unimplemented bit, read as '0' |
| u = Bit is unchanged | x = Bit is unknown | -n/n = Value at POR and BOR/Value at all other Resets |
| '1' = Bit is set | '0' = Bit is cleared | |

bit 7-0 **ADRES<9:2>**: ADC Result Register bits
Upper eight bits of 10-bit conversion result

**REGISTER 20-5: ADRESL: ADC RESULT REGISTER LOW (ADRESL) ADFM = 0**

| R/W-x/u | R/W-x/u | R/W-x/u | R/W-x/u | R/W-x/u | R/W-x/u | R/W-x/u | R/W-x/u |
|---|---|---|---|---|---|---|---|
| ADRES<1:0> | | — | — | — | — | — | — |
| bit 7 | | | | | | | bit 0 |

| **Legend:** | | |
|---|---|---|
| R = Readable bit | W = Writable bit | U = Unimplemented bit, read as '0' |
| u = Bit is unchanged | x = Bit is unknown | -n/n = Value at POR and BOR/Value at all other Resets |
| '1' = Bit is set | '0' = Bit is cleared | |

bit 7-6 **ADRES<1:0>**: ADC Result Register bits
Lower two bits of 10-bit conversion result

bit 5-0 **Reserved**: Do not use.

 © 2013 Microchip Technology Inc.

chanhvinh.com



**REGISTER 20-6: ADRESH: ADC RESULT REGISTER HIGH (ADRESH) ADFM = 1**

| R/W-x/u | R/W-x/u | R/W-x/u | R/W-x/u | R/W-x/u | R/W-x/u | R/W-x/u | R/W-x/u |
|---|---|---|---|---|---|---|---|
| — | — | — | — | — | — | ADRES<9:8> | |
| bit 7 | | | | | | | bit 0 |

| **Legend:** | | |
|---|---|---|
| R = Readable bit | W = Writable bit | U = Unimplemented bit, read as ‘0’ |
| u = Bit is unchanged | x = Bit is unknown | -n/n = Value at POR and BOR/Value at all other Resets |
| ‘1’ = Bit is set | ‘0’ = Bit is cleared | |

bit 7-2 **Reserved**: Do not use.

bit 1-0 **ADRES<9:8>**: ADC Result Register bits
Upper two bits of 10-bit conversion result

**REGISTER 20-7: ADRESL: ADC RESULT REGISTER LOW (ADRESL) ADFM = 1**

| R/W-x/u | R/W-x/u | R/W-x/u | R/W-x/u | R/W-x/u | R/W-x/u | R/W-x/u | R/W-x/u |
|---|---|---|---|---|---|---|---|
| ADRES<7:0> | | | | | | | |
| bit 7 | | | | | | | bit 0 |

| **Legend:** | | |
|---|---|---|
| R = Readable bit | W = Writable bit | U = Unimplemented bit, read as ‘0’ |
| u = Bit is unchanged | x = Bit is unknown | -n/n = Value at POR and BOR/Value at all other Resets |
| ‘1’ = Bit is set | ‘0’ = Bit is cleared | |

bit 7-0 **ADRES<7:0>**: ADC Result Register bits
Lower eight bits of 10-bit conversion result

chanhvinh.com



## 20.4 ADC Acquisition Requirements

For the ADC to meet its specified accuracy, the charge holding capacitor (CHOLD) must be allowed to fully charge to the input channel voltage level. The Analog Input model is shown in Figure 20-4. The source impedance (RS) and the internal sampling switch (RSS) impedance directly affect the time required to charge the capacitor CHOLD. The sampling switch (RSS) impedance varies over the device voltage (VDD), refer to Figure 20-4. **The maximum recommended impedance for analog sources is 10 kΩ.** As the source impedance is decreased, the acquisition time may be decreased. After the analog input channel is selected (or changed), an ADC acquisition must be done before the conversion can be started. To calculate the minimum acquisition time, Equation 20-1 may be used. This equation assumes that 1/2 LSb error is used (1,024 steps for the ADC). The 1/2 LSb error is the maximum error allowed for the ADC to meet its specified resolution.

**EQUATION 20-1: ACQUISITION TIME EXAMPLE**

*Assumptions:* $Temperature = 50°C$ *and external impedance of* $10k\Omega$ $5.0V$ $V_{DD}$

$$\begin{aligned} T_{ACQ} &= \text{Amplifier Settling Time} + \text{Hold Capacitor Charging Time} + \text{Temperature Coefficient} \\ &= T_{AMP} + T_C + T_{COFF} \\ &= 2\mu s + T_C + [(\text{Temperature} - 25°C)(0.05\mu s/°C)] \end{aligned}$$

*The value for* $T_C$ *can be approximated with the following equations:*

$$V_{APPLIED}\left(1 - \frac{1}{(2^{n+1}) - 1}\right) = V_{CHOLD} \quad ;[1]\ V_{CHOLD}\ \text{charged to within 1/2 lsb}$$

$$V_{APPLIED}\left(1 - e^{\frac{-T_C}{RC}}\right) = V_{CHOLD} \quad ;[2]\ V_{CHOLD}\ \text{charge response to}\ V_{APPLIED}$$

$$V_{APPLIED}\left(1 - e^{\frac{-T_C}{RC}}\right) = V_{APPLIED}\left(1 - \frac{1}{(2^{n+1}) - 1}\right) \quad ;\text{combining [1] and [2]}$$

*Note: Where n = number of bits of the ADC.*

*Solving for* $T_C$*:*

$$\begin{aligned} T_C &= -C_{HOLD}(R_{IC} + R_{SS} + R_S)\ ln(1/2047) \\ &= -10pF(1k\Omega + 7k\Omega + 10k\Omega)\ ln(0.0004885) \\ &= 1.37\mu s \end{aligned}$$

*Therefore:*

$$\begin{aligned} T_{ACQ} &= 2\mu s + 892ns + [(50°C - 25°C)(0.05\mu s/°C)] \\ &= 4.62\mu s \end{aligned}$$

**Note 1:** The reference voltage (VREF) has no effect on the equation, since it cancels itself out.

**2:** The charge holding capacitor (CHOLD) is not discharged after each conversion.

**3:** The maximum recommended impedance for analog sources is 10 kΩ. This is required to meet the pin leakage specification.

 © 2013 Microchip Technology Inc.

chanhvinh.com



**FIGURE 20-4: ANALOG INPUT MODEL**

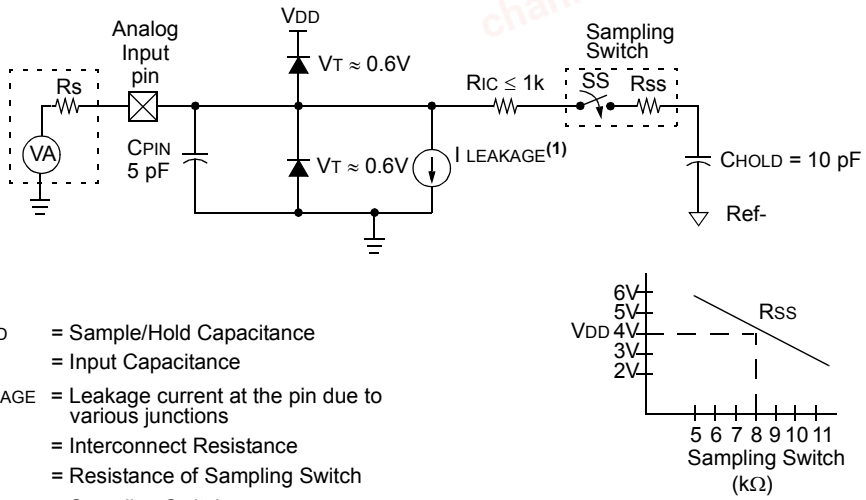





**Legend:**

| | |
|---|---|
| CHOLD | = Sample/Hold Capacitance |
| CPIN | = Input Capacitance |
| I LEAKAGE | = Leakage current at the pin due to various junctions |
| RIC | = Interconnect Resistance |
| RSS | = Resistance of Sampling Switch |
| SS | = Sampling Switch |
| VT | = Threshold Voltage |

**Note 1:** Refer to Table 32-4: I/O Ports (parameter D060).

**FIGURE 20-5: ADC TRANSFER FUNCTION**

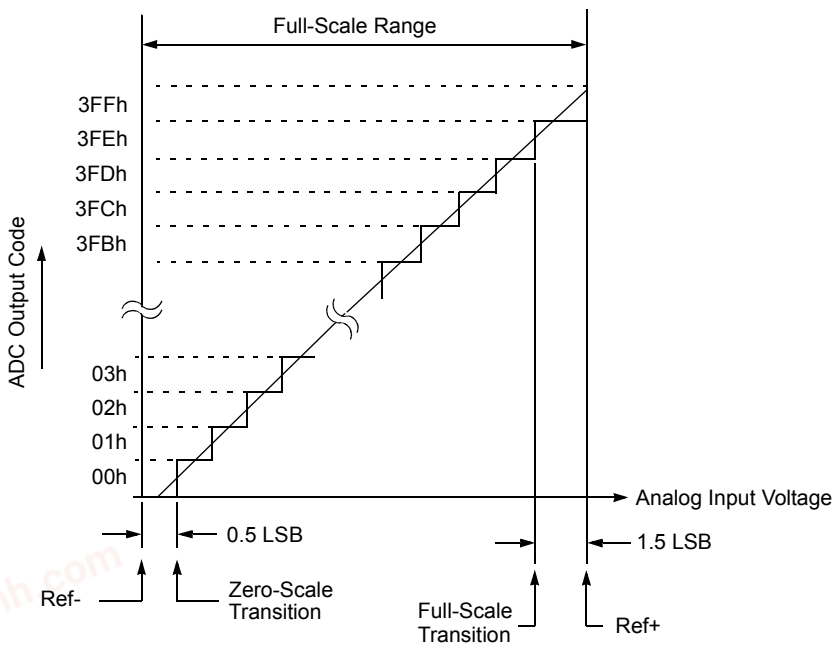

chanhvinh.com



**TABLE 20-3: SUMMARY OF REGISTERS ASSOCIATED WITH ADC**

| Name | Bit 7 | Bit 6 | Bit 5 | Bit 4 | Bit 3 | Bit 2 | Bit 1 | Bit 0 | Register on Page |
|---|---|---|---|---|---|---|---|---|---|
| ADCON0 | — | CHS<4:0> | | | | | GO/$\overline{\text{DONE}}$ | ADON | 229 |
| ADCON1 | ADFM | ADCS<2:0> | | | — | — | ADPREF<1:0> | | 230 |
| ADCON2 | TRIGSEL<3:0> | | | | — | — | — | — | 231 |
| ADRESH | ADC Result Register High | | | | | | | | 232, 233 |
| ADRESL | ADC Result Register Low | | | | | | | | 232, 233 |
| ANSELA | — | — | — | ANSA4 | — | ANSA2 | ANSA1 | ANSA0 | 125 |
| ANSELB(1) | — | — | ANSB5 | ANSB4 | — | — | — | — | 131 |
| ANSELC | ANSC7(1) | ANSC6(1) | ANSC5(2) | ANSC4(2) | ANSC3 | ANSC2 | ANSC1 | ANSC0 | 136 |
| INTCON | GIE | PEIE | TMR0IE | INTE | IOCIE | TMR0IF | INTF | IOCIF | 86 |
| PIE1 | TMR1GIE | ADIE | RCIE | TXIE | SSP1IE | CCP1IE | TMR2IE | TMR1IE | 87 |
| PIR1 | TMR1GIF | ADIF | RCIF | TXIF | SSP1IF | CCP1IF | TMR2IF | TMR1IF | 90 |
| TRISA | — | — | TRISA5 | TRISA4 | —(3) | TRISA2 | TRISA1 | TRISA0 | 124 |
| TRISB(1) | TRISB7 | TRISB6 | TRISB5 | TRISB4 | — | — | — | — | 130 |
| TRISC | TRISC7(1) | TRISC6(1) | TRISC5 | TRISC4 | TRISC3 | TRISC2 | TRISC1 | TRISC0 | 135 |
| FVRCON | FVREN | FVRRDY | TSEN | TSRNG | CDAFVR<1:0> | | ADFVR<1:0> | | 155 |
| DAC1CON0 | DAC1EN | — | DAC1OE1 | DAC1OE2 | DAC1PSS<1:0> | | — | DAC1NSS | 244 |

**Legend:** x = unknown, u = unchanged, – = unimplemented read as '0', q = value depends on condition. Shaded cells are not used for the ADC module.

**Note 1:** PIC16(L)F1708 only.

**2:** PIC16(L)F1704 only.

**3:** Unimplemented, read as '1'.

 © 2013 Microchip Technology Inc.

chanhvinh.com



## 21.0 OPERATIONAL AMPLIFIER (OPA) MODULES

The Operational Amplifier (OPA) is a standard three-terminal device requiring external feedback to operate. The OPA module has the following features:

- External connections to I/O ports
- Selectable Gain Bandwidth Product
- Low leakage inputs
- Factory Calibrated Input Offset Voltage

**FIGURE 21-1: OPAx MODULE BLOCK DIAGRAM**

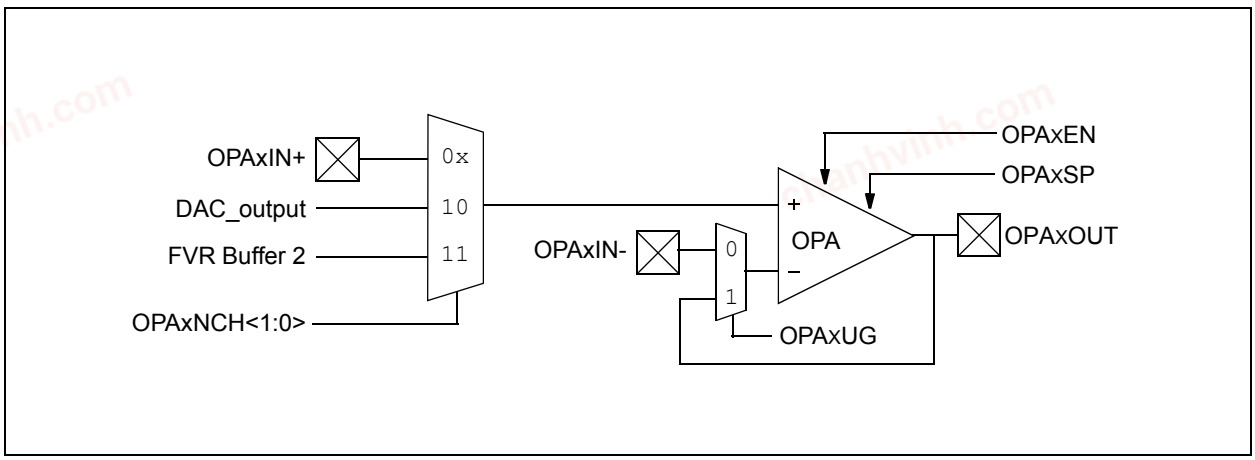

chanhvinh.com



## 21.1 OPA Module Performance

Common AC and DC performance specifications for the OPA module:

- Common Mode Voltage Range
- Leakage Current
- Input Offset Voltage
- Open Loop Gain
- Gain Bandwidth Product

**Common mode voltage range** is the specified voltage range for the OPA+ and OPA- inputs, for which the OPA module will perform to within its specifications. The OPA module is designed to operate with input voltages between VSS and VDD. Behavior for Common mode voltages greater than VDD, or below VSS, are not guaranteed.

**Leakage current** is a measure of the small source or sink currents on the OPA+ and OPA- inputs. To minimize the effect of leakage currents, the effective impedances connected to the OPA+ and OPA- inputs should be kept as small as possible and equal.

**Input offset voltage** is a measure of the voltage difference between the OPA+ and OPA- inputs in a closed loop circuit with the OPA in its linear region. The offset voltage will appear as a DC offset in the output equal to the input offset voltage, multiplied by the gain of the circuit. The input offset voltage is also affected by the Common mode voltage. The OPA is factory calibrated to minimize the input offset voltage of the module.

**Open loop gain** is the ratio of the output voltage to the differential input voltage, (OPA+) - (OPA-). The gain is greatest at DC and falls off with frequency.

**Gain Bandwidth Product** or GBWP is the frequency at which the open loop gain falls off to 0 dB. The lower GBWP is optimized for systems requiring low frequency response and low-power consumption.

### 21.1.1 OPA Module Control

The OPA module is enabled by setting the OPAxEN bit of the OPAxCON register. When enabled, the OPA forces the output driver of OPAxOUT pin into tri-state to prevent contention between the driver and the OPA output.

The OPAxSP bit of the OPAxCON register controls the power and gain bandwidth of the amplifier. Higher power and greater bandwidth operations are selected by setting the OPAxSP bit. The default is low-power reduced bandwidth.

| | |
|---|---|
| **Note:** | When the OPA module is enabled, the OPAxOUT pin is driven by the op amp output, not by the PORT digital driver. Refer to Table 32-17: Operational Amplifier (OPA) for the op amp output drive capability. |

### 21.1.2 UNITY GAIN MODE

The OPAxUG bit of the OPAxCON register selects the Unity Gain mode. When unity gain is selected, the OPA output is connected to the inverting input and the OPAxIN pin is relinquished, releasing the pin for general purpose input and output.

## 21.2 Effects of Reset

A device Reset forces all registers to their Reset state. This disables the OPA module.

 © 2013 Microchip Technology Inc.

chanhvinh.com



## 21.3 Register Definitions: Op Amp Control

### REGISTER 21-1: OPAxCON: OPERATIONAL AMPLIFIERS (OPAx) CONTROL REGISTERS

| R/W-0/0 | R/W-0/0 | U-0 | R/W-0/0 | U-0 | U-0 | R/W-0/0 | R/W-0/0 |
|---|---|---|---|---|---|---|---|
| OPAxEN | OPAxSP | — | OPAxUG | — | — | OPAxCH<1:0> | |
| bit 7 | | | | | | | bit 0 |

| **Legend:** | | |
|---|---|---|
| R = Readable bit | W = Writable bit | U = Unimplemented bit, read as '0' |
| u = Bit is unchanged | x = Bit is unknown | -n/n = Value at POR and BOR/Value at all other Resets |
| '1' = Bit is set | '0' = Bit is cleared | q = Value depends on condition |

bit 7 **OPAxEN:** Op Amp Enable bit
1 = Op amp is enabled
0 = Op amp is disabled and consumes no active power

bit 6 **OPAxSP:** Op Amp Speed/Power Select bit
1 = Op amp operates in high GBWP mode
0 = Op amp operates in low GBWP mode

bit 5 **Unimplemented:** Read as '0'

bit 4 **OPAxUG:** Op Amp Unity Gain Select bit
1 = OPA output is connected to inverting input. OPAxIN- pin is available for general purpose I/O.
0 = Inverting input is connected to the OPAxIN- pin

bit 3-2 **Unimplemented:** Read as '0'

bit 1-0 **OPAxCH<1:0>:** Non-inverting Channel Selection bits
11 = Non-inverting input connects to FVR Buffer 2 output
10 = Non-inverting input connects to DAC_output
0x = Non-inverting input connects to OPAxIN+ pin

### TABLE 21-1: SUMMARY OF REGISTERS ASSOCIATED WITH OP AMPS

| Name | Bit 7 | Bit 6 | Bit 5 | Bit 4 | Bit 3 | Bit 2 | Bit 1 | Bit 0 | Register on Page |
|---|---|---|---|---|---|---|---|---|---|
| ANSELB(1) | — | — | ANSB5 | ANSB4 | — | — | — | — | 131 |
| ANSELC | ANSC7(1) | ANSC6(1) | ANSC5(2) | ANSC4(2) | ANSC3 | ANSC2 | ANSC1 | ANSC0 | 131 |
| DAC1CON0 | DAC1EN | — | DAC1OE1 | DAC1OE2 | DAC1PSS<1:0> | | — | DAC1NSS | 244 |
| DAC1CON1 | DAC1R<7:0> | | | | | | | | 244 |
| FVRCON | FVREN | FVRRDY | TSEN | TSRNG | CDAFVR<1:0> | | ADFVR<1:0> | | 155 |
| OPA1CON | OPA1EN | OPA1SP | — | OPA1UG | — | — | OPA1PCH<1:0> | | 239 |
| OPA2CON | OPA2EN | OPA2SP | — | OPA2UG | — | — | OPA2PCH<1:0> | | 239 |
| TRISB(1) | TRISB7 | TRISB6 | TRISB5 | TRISB4 | — | — | — | — | 130 |
| TRISC | TRISC7(1) | TRISC6(1) | TRISC5 | TRISC4 | TRISC3 | TRISC2 | TRISC1 | TRISC0 | 135 |

**Legend:** — = unimplemented location, read as '0'. Shaded cells are not used by op amps.
**Note 1:** PIC16(L)F1708 only.
**2:** PIC16(L)F1704 only.
**3:** Unimplemented, read as '1'.

chanhvinh.com



**NOTES:**

chanhvinh.com

 © 2013 Microchip Technology Inc.

chanhvinh.com



## 22.0 8-BIT DIGITAL-TO-ANALOG CONVERTER (DAC1) MODULE

The Digital-to-Analog Converter supplies a variable voltage reference, ratiometric with the input source, with 256 selectable output levels.

The input of the DAC can be connected to:

- External VREF pins
- VDD supply voltage
- FVR (Fixed Voltage Reference)

The output of the DAC can be configured to supply a reference voltage to the following:

- Comparator positive input
- ADC input channel
- DAC1OUT1 pin
- DAC1OUT2 pin

The Digital-to-Analog Converter (DAC) is enabled by setting the DAC1EN bit of the DAC1CON0 register.

**EQUATION 22-1: DAC OUTPUT VOLTAGE**

$$\underline{IF\ DAC1EN = 1}$$

$$V_{OUT} = \left( (V_{SOURCE+} - V_{SOURCE-}) \times \frac{DAC1R[7:0]}{2^8} \right) + V_{SOURCE-}$$

$$V_{SOURCE+} = V_{DD},\ V_{REF},\ or\ FVR\ BUFFER\ 2$$

$$V_{SOURCE-} = V_{SS}$$

### 22.1 Output Voltage Selection

The DAC has 256 voltage level ranges. The 256 levels are set with the DAC1R<7:0> bits of the DAC1CON1 register.

The DAC output voltage is determined by Equation 22-1:

### 22.2 Ratiometric Output Level

The DAC output value is derived using a resistor ladder with each end of the ladder tied to a positive and negative voltage reference input source. If the voltage of either input source fluctuates, a similar fluctuation will result in the DAC output value.

The value of the individual resistors within the ladder can be found in Table 32-19: Digital-to-Analog Converter (DAC) Specifications.

### 22.3 DAC Voltage Reference Output

The DAC voltage can be output to the DAC1OUT1 and DAC1OUT2 pins by setting the respective DAC1OE1 and DAC1OE2 pins of the DAC1CON0 register. Selecting the DAC reference voltage for output on either DAC1OUTx pin automatically overrides the digital output buffer and digital input threshold detector functions of that pin. Reading the DAC1OUTx pin when it has been configured for DAC reference voltage output will always return a '0'.

Due to the limited current drive capability, a buffer must be used on the DAC voltage reference output for external connections to either DAC1OUTx pin. Figure 22-2 shows an example buffering technique.

chanhvinh.com



**FIGURE 22-1: DIGITAL-TO-ANALOG CONVERTER BLOCK DIAGRAM**

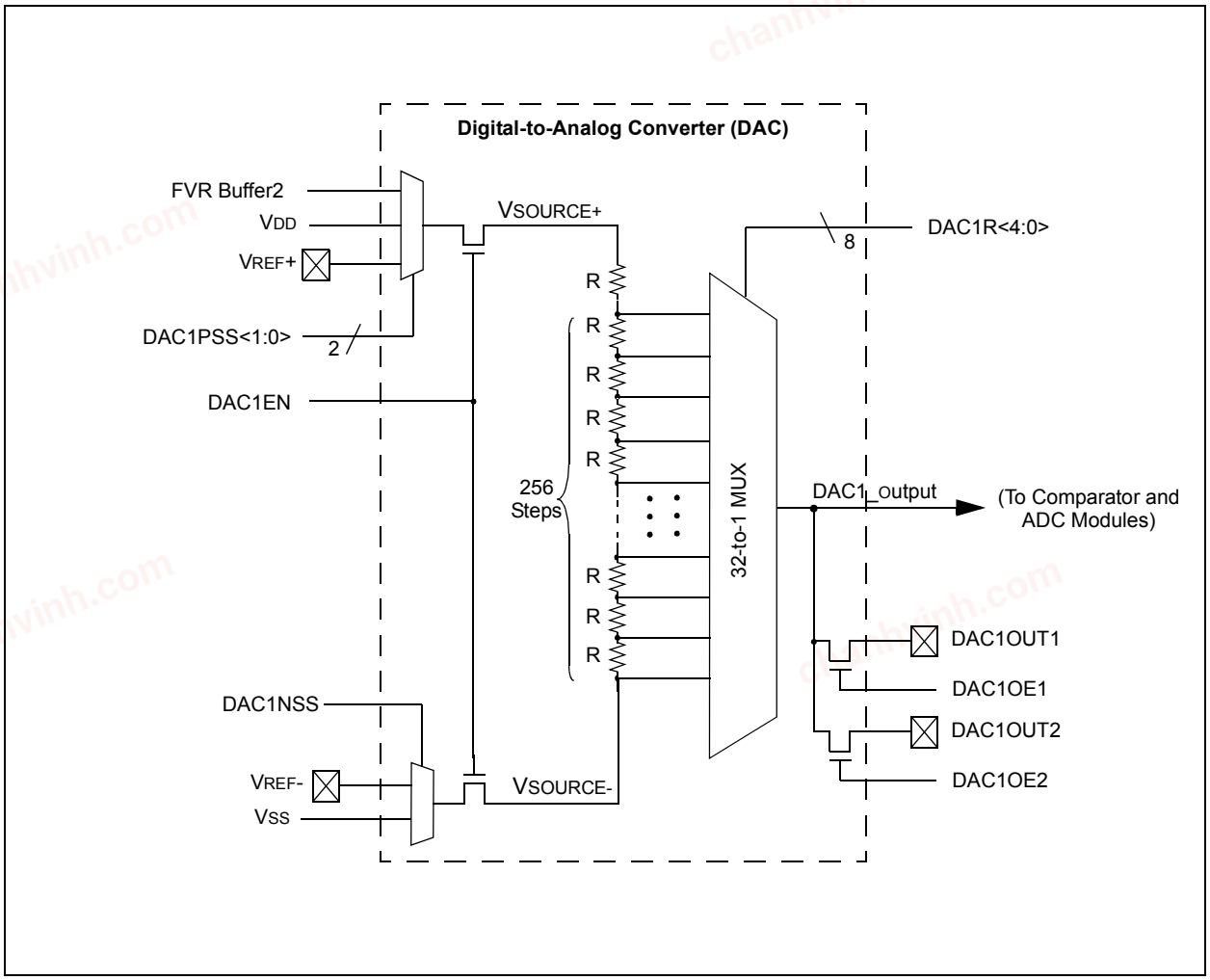


**FIGURE 22-2: VOLTAGE REFERENCE OUTPUT BUFFER EXAMPLE**

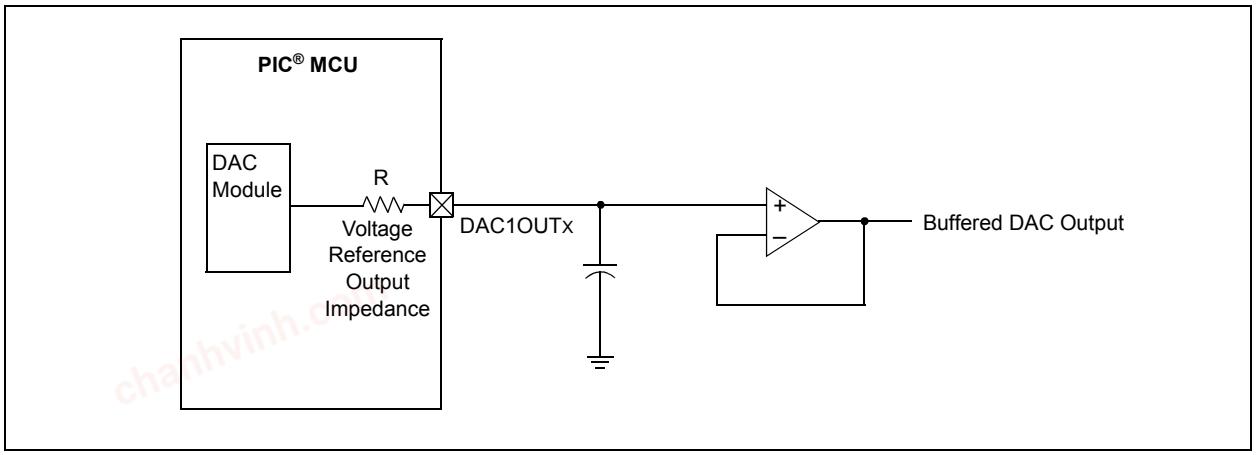


 © 2013 Microchip Technology Inc.

chanhvinh.com



## 22.4 Operation During Sleep

The DAC continues to function during Sleep. When the device wakes up from Sleep through an interrupt or a Watchdog Timer time-out, the contents of the DAC1CON0 register are not affected. To minimize current consumption in Sleep mode, the voltage reference should be disabled.

## 22.5 Effects of a Reset

A device Reset affects the following:

- DAC is disabled.
- DAC output voltage is removed from the DAC1OUT pin.
- The DAC1R<4:0> range select bits are cleared.

chanhvinh.com

chanhvinh.com



## 22.6 Register Definitions: DAC Control

### REGISTER 22-1: DAC1CON0: VOLTAGE REFERENCE CONTROL REGISTER 0

| R/W-0/0 | U-0 | R/W-0/0 | R/W-0/0 | R/W-0/0 | R/W-0/0 | U-0 | R/W-0/0 |
|---|---|---|---|---|---|---|---|
| DAC1EN | — | DAC1OE1 | DAC1OE2 | DAC1PSS<1:0> | | — | DAC1NSS |
| bit 7 | | | | | | | bit 0 |

| Legend: | | |
|---|---|---|
| R = Readable bit | W = Writable bit | U = Unimplemented bit, read as '0' |
| u = Bit is unchanged | x = Bit is unknown | -n/n = Value at POR and BOR/Value at all other Resets |
| '1' = Bit is set | '0' = Bit is cleared | |

bit 7 **DAC1EN:** DAC1 Enable bit
1 = DAC is enabled
0 = DAC is disabled

bit 6 **Unimplemented:** Read as '0'

bit 5 **DAC1OE1:** DAC1 Voltage Output 1 Enable bit
1 = DAC voltage level is also an output on the DAC1OUT1 pin
0 = DAC voltage level is disconnected from the DAC1OUT1 pin

bit 4 **DAC1OE2:** DAC1 Voltage Output 2 Enable bit
1 = DAC voltage level is also an output on the DAC1OUT2 pin
0 = DAC voltage level is disconnected from the DAC1OUT2 pin

bit 3-2 **DAC1PSS<1:0>:** DAC1 Positive Source Select bits
11 = Reserved, do not use
10 = FVR Buffer2 output
01 = $V_{REF+}$ pin
00 = $V_{DD}$

bit 1 **Unimplemented:** Read as '0'

bit 0 **DAC1NSS:** DAC1 Negative Source Select bits
1 = $V_{REF-}$ pin
0 = $V_{SS}$

### REGISTER 22-2: DAC1CON1: VOLTAGE REFERENCE CONTROL REGISTER 1

| R/W-0/0 | R/W-0/0 | R/W-0/0 | R/W-0/0 | R/W-0/0 | R/W-0/0 | R/W-0/0 | R/W-0/0 |
|---|---|---|---|---|---|---|---|
| DAC1R<7:0> | | | | | | | |
| bit 7 | | | | | | | bit 0 |

| Legend: | | |
|---|---|---|
| R = Readable bit | W = Writable bit | U = Unimplemented bit, read as '0' |
| u = Bit is unchanged | x = Bit is unknown | -n/n = Value at POR and BOR/Value at all other Resets |
| '1' = Bit is set | '0' = Bit is cleared | |

bit 7-0 **DAC1R<7:0>:** DAC1 Voltage Output Select bits

### TABLE 22-1: SUMMARY OF REGISTERS ASSOCIATED WITH THE DAC1 MODULE

| Name | Bit 7 | Bit 6 | Bit 5 | Bit 4 | Bit 3 | Bit 2 | Bit 1 | Bit 0 | Register on page |
|---|---|---|---|---|---|---|---|---|---|
| DAC1CON0 | DAC1EN | — | DAC1OE1 | DAC1OE2 | DAC1PSS<1:0> | | — | DAC1NSS | 244 |
| DAC1CON1 | DAC1R<7:0> | | | | | | | | 244 |

**Legend:** — = Unimplemented location, read as '0'. Shaded cells are not used with the DAC module.

 © 2013 Microchip Technology Inc.

chanhvinh.com



## 23.0 ZERO-CROSS DETECTION (ZCD) MODULE

The ZCD module detects when an A/C signal crosses through the ground potential. The actual zero crossing threshold is the zero crossing reference voltage, which is slightly above ground.

The connection to the signal to be detected is through a current limiting resistor. The module applies a current source or sink to the ZCD pin to maintain a constant voltage on the pin, thereby preventing the pin voltage from forward biasing the ESD protection diodes. When the applied voltage is greater than the reference voltage, the module sinks current. When the applied voltage is less than the reference voltage, the module sources current. The current source and sink action keeps the pin voltage constant over the full range of the applied voltage. The ZCD module is shown in the simplified block diagram Figure 23-1.

The ZCD module is useful when monitoring an AC waveform for, but not limited to, the following purposes:

- A/C period measurement
- Accurate long term time measurement
- Dimmer phase delayed drive
- Low EMI cycle switching

### 23.1 External Resistor Selection

The ZCD module requires a current limiting resistor in series with the external voltage source. The impedance and rating of this resistor depends on the external source peak voltage. Select a resistor value that will drop all of the peak voltage when the current through the resistor is 300 µA. An example of this calculation is given in Equation 23-1.

**EQUATION 23-1: EXTERNAL RESISTOR**

$$Resistor = \frac{PeakVoltage}{3\times10^{-4}}$$

### 23.2 ZCD Logic Output

The ZCD module includes a status bit, which can be read to determine whether the current source or sink is active. The ZCDxOUT bit of the ZCDCON register is set when the current sink is active, and cleared when the current source is active. The ZCDxOUT bit is affected by the polarity bit.

**FIGURE 23-1: SIMPLIFIED ZCD BLOCK DIAGRAM**

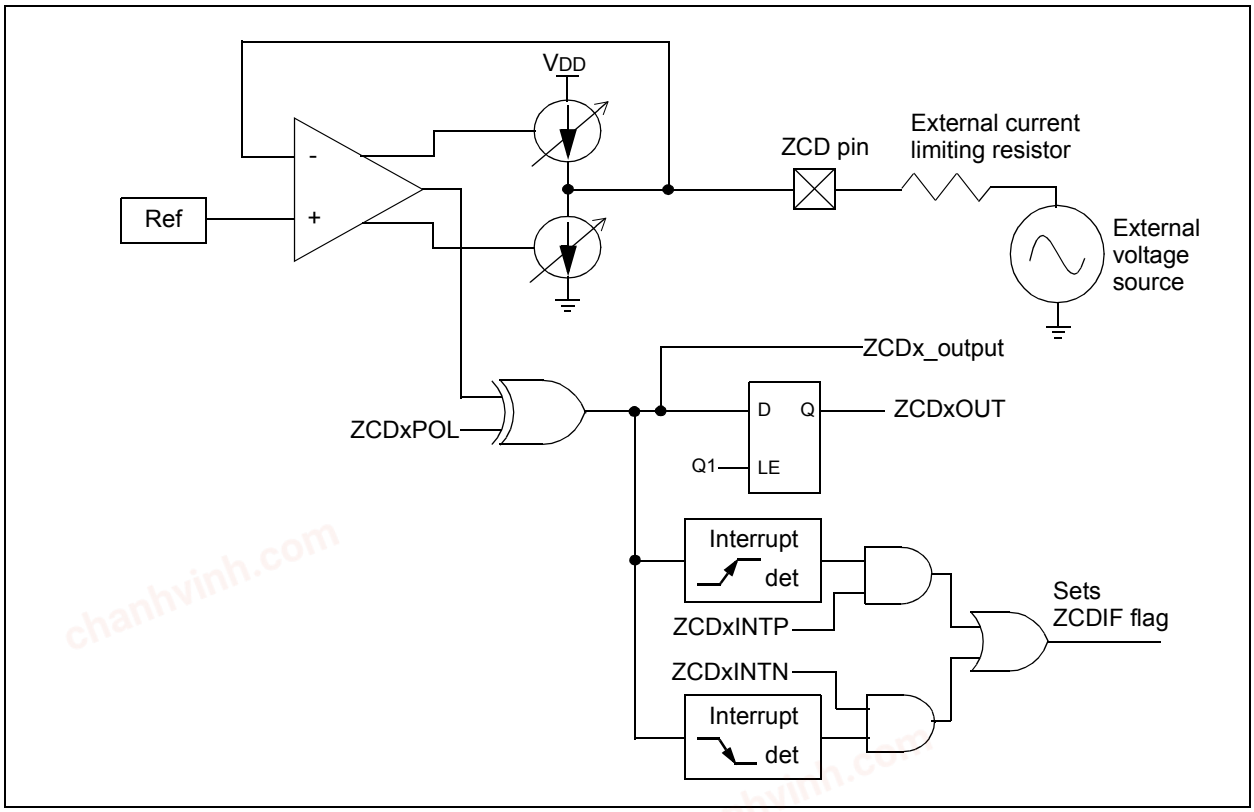

chanhvinh.com



## 23.3 ZCD Logic Polarity

The ZCDxPOL bit of the ZCDxCON register inverts the ZCDxOUT bit relative to the current source and sink output. When the ZCDxPOL bit is set, a ZCDxOUT high indicates that the current source is active, and a low output indicates that the current sink is active.

The ZCDxPOL bit affects the ZCD interrupts. See **Section 23.4 "ZCD Interrupts"**.

## 23.4 ZCD Interrupts

An interrupt will be generated upon a change in the ZCD logic output when the appropriate interrupt enables are set. A rising edge detector and a falling edge detector are present in the ZCD for this purpose.

The ZCDIF bit of the PIR3 register will be set when either edge detector is triggered and its associated enable bit is set. The ZCDxINTP enables rising edge interrupts and the ZCDxINTN bit enables falling edge interrupts. Both are located in the ZCDxCON register.

To fully enable the interrupt, the following bits must be set:

- ZCDIE bit of the PIE3 register
- ZCDxINTP bit of the ZCDxCON register (for a rising edge detection)
- ZCDxINTN bit of the ZCDxCON register (for a falling edge detection)
- PEIE and GIE bits of the INTCON register

Changing the ZCDxPOL bit will cause an interrupt, regardless of the level of the ZCDxEN bit.

The ZCDIF bit of the PIR3 register must be cleared in software as part of the interrupt service. If another edge is detected while this flag is being cleared, the flag will still be set at the end of the sequence.

## 23.5 Operation During Sleep

The ZCD current sources and interrupts are unaffected by Sleep.

## 23.6 Effects of a Reset

The ZCD circuit can be configured to default to the active or inactive state on Power-On-Reset (POR). When the ZCDDIS configuration bit is cleared, the ZCD circuit will be active at POR. When the ZCDDIS configuration bit is set, the ZCDEN bit of the ZCDCON register must be set to enable the ZCD module.

 © 2013 Microchip Technology Inc.

chanhvinh.com



## 23.7 Register Definitions: ZCD Control

### REGISTER 23-1: ZCDxCON: ZERO CROSS DETECTION CONTROL REGISTER

| R/W-q/q | U-0 | R-x/x | R/W-0/0 | U-0 | U-0 | R/W-0/0 | R/W-0/0 |
|---|---|---|---|---|---|---|---|
| ZCDxEN | — | ZCDxOUT | ZCDxPOL | — | — | ZCDxINTP | ZCDxINTN |
| bit 7 | | | | | | | bit 0 |

| **Legend:** | | |
|---|---|---|
| R = Readable bit | W = Writable bit | U = Unimplemented bit, read as '0' |
| u = Bit is unchanged | x = Bit is unknown | -n/n = Value at POR and BOR/Value at all other Resets |
| '1' = Bit is set | '0' = Bit is cleared | q = value depends on configuration bits |

bit 7 **ZCDxEN:** Zero-Cross Detection Enable bit
1 = Zero-cross detect is enabled. ZCD pin is forced to output to source and sink current.
0 = Zero-cross detect is disabled. ZCD pin operates according to PPS and TRIS controls.

bit 6 **Unimplemented:** Read as '0'

bit 5 **ZCDxOUT:** Zero-Cross Detection Logic Level bit
ZCDxPOL bit = 0:
1 = ZCD pin is sinking current
0 = ZCD pin is sourcing current
ZCDxPOL bit = 1:
1 = ZCD pin is sourcing current
0 = ZCD pin is sinking current

bit 4 **ZCDxPOL:** Zero-Cross Detection Logic Output Polarity bit
1 = ZCD logic output is inverted
0 = ZCD logic output is not inverted

bit 3-2 **Unimplemented:** Read as '0'

bit 1 **ZCDxINTP:** Zero-Cross Positive Edge Interrupt Enable bit
1 = ZCDIF bit is set on low-to-high ZCDxOUT transition
0 = ZCDIF bit is unaffected by low-to-high ZCDxOUT transition

bit 0 **ZCDxINTN:** Zero-Cross Negative Edge Interrupt Enable bit
1 = ZCDIF bit is set on high-to-low ZCDxOUT transition
0 = ZCDIF bit is unaffected by high-to-low ZCDxOUT transition

### TABLE 23-1: SUMMARY OF REGISTERS ASSOCIATED WITH THE ZCD MODULE

| Name | Bit 7 | Bit 6 | Bit 5 | Bit 4 | Bit 3 | Bit 2 | Bit 1 | Bit 0 | Register on page |
|---|---|---|---|---|---|---|---|---|---|
| PIE3 | — | — | COGIE | ZCDIE | — | CLC3IE | CLC2IE | CLC1IE | 89 |
| PIR3 | — | — | COGIF | ZCDIF | — | CLC3IF | CLC2IF | CLC1IF | 92 |
| ZCD1CON | ZCD1EN | — | ZCD1OUT | ZCD1POL | — | — | ZCD1INTP | ZCD1INTN | 247 |

**Legend:** — = unimplemented, read as '0'. Shaded cells are unused by the ZCD module.

### TABLE 23-2: SUMMARY OF CONFIGURATION WORD WITH THE ZCD MODULE

| Name | Bits | Bit -/7 | Bit -/6 | Bit 13/5 | Bit 12/4 | Bit 11/3 | Bit 10/2 | Bit 9/1 | Bit 8/0 | Register on Page |
|---|---|---|---|---|---|---|---|---|---|---|
| CONFIG2 | 13:8 | — | — | LVP | $\overline{\text{DEBUG}}$ | $\overline{\text{LPBOR}}$ | BORV | STVREN | PLLEN | 52 |
| | 7:0 | ZCDDIS | — | — | — | — | PPS1WAY | WRT<1:0> | | |

**Legend:** — = unimplemented location, read as '0'. Shaded cells are not used by the ZCD module.

chanhvinh.com



**NOTES:**

chanhvinh.com

 © 2013 Microchip Technology Inc.

chanhvinh.com



## 24.0 TIMER0 MODULE

The Timer0 module is an 8-bit timer/counter with the following features:

- 8-bit timer/counter register (TMR0)
- 8-bit prescaler (independent of Watchdog Timer)
- Programmable internal or external clock source
- Programmable external clock edge selection
- Interrupt on overflow
- TMR0 can be used to gate Timer1

Figure 24-1 is a block diagram of the Timer0 module.

## 24.1 Timer0 Operation

The Timer0 module can be used as either an 8-bit timer or an 8-bit counter.

### 24.1.1 8-BIT TIMER MODE

The Timer0 module will increment every instruction cycle, if used without a prescaler. 8-bit Timer mode is selected by clearing the TMR0CS bit of the OPTION_REG register.

When TMR0 is written, the increment is inhibited for two instruction cycles immediately following the write.

| **Note:** | The value written to the TMR0 register can be adjusted, in order to account for the two instruction cycle delay when TMR0 is written. |
|---|---|

### 24.1.2 8-BIT COUNTER MODE

In 8-Bit Counter mode, the Timer0 module will increment on every rising or falling edge of the T0CKI pin.

8-Bit Counter mode using the T0CKI pin is selected by setting the TMR0CS bit in the OPTION_REG register to '1'.

The rising or falling transition of the incrementing edge for either input source is determined by the TMR0SE bit in the OPTION_REG register.

**FIGURE 24-1: BLOCK DIAGRAM OF THE TIMER0**

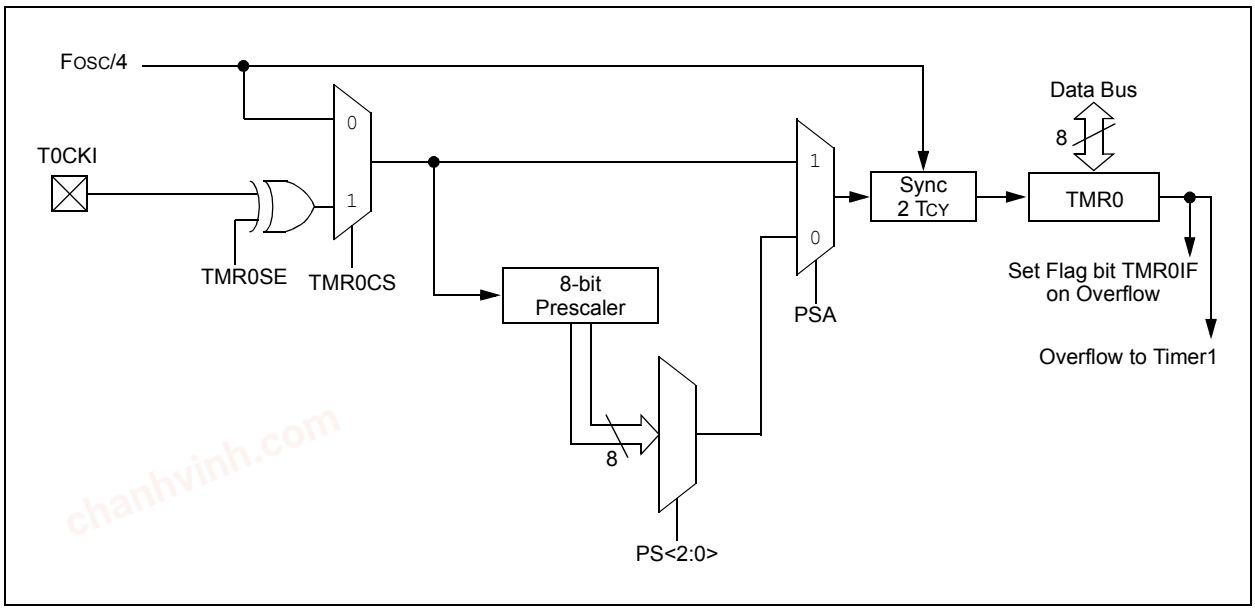

chanhvinh.com



### 24.1.3 SOFTWARE PROGRAMMABLE PRESCALER

A software programmable prescaler is available for exclusive use with Timer0. The prescaler is enabled by clearing the PSA bit of the OPTION_REG register.

| | |
|---|---|
| **Note:** | The Watchdog Timer (WDT) uses its own independent prescaler. |

There are eight prescaler options for the Timer0 module ranging from 1:2 to 1:256. The prescale values are selectable via the PS<2:0> bits of the OPTION_REG register. In order to have a 1:1 prescaler value for the Timer0 module, the prescaler must be disabled by setting the PSA bit of the OPTION_REG register.

The prescaler is not readable or writable. All instructions writing to the TMR0 register will clear the prescaler.

### 24.1.4 TIMER0 INTERRUPT

Timer0 will generate an interrupt when the TMR0 register overflows from FFh to 00h. The TMR0IF interrupt flag bit of the INTCON register is set every time the TMR0 register overflows, regardless of whether or not the Timer0 interrupt is enabled. The TMR0IF bit can only be cleared in software. The Timer0 interrupt enable is the TMR0IE bit of the INTCON register.

| | |
|---|---|
| **Note:** | The Timer0 interrupt cannot wake the processor from Sleep since the timer is frozen during Sleep. |

### 24.1.5 8-BIT COUNTER MODE SYNCHRONIZATION

When in 8-Bit Counter mode, the incrementing edge on the T0CKI pin must be synchronized to the instruction clock. Synchronization can be accomplished by sampling the prescaler output on the Q2 and Q4 cycles of the instruction clock. The high and low periods of the external clocking source must meet the timing requirements as shown in Table 32-12: Timer0 and Timer1 External Clock Requirements.

### 24.1.6 OPERATION DURING SLEEP

Timer0 cannot operate while the processor is in Sleep mode. The contents of the TMR0 register will remain unchanged while the processor is in Sleep mode.

 © 2013 Microchip Technology Inc.

chanhvinh.com



## 24.2 Register Definitions: Option Register

**REGISTER 24-1: OPTION_REG: OPTION REGISTER**

| R/W-1/1 | R/W-1/1 | R/W-1/1 | R/W-1/1 | R/W-1/1 | R/W-1/1 | R/W-1/1 | R/W-1/1 |
|---|---|---|---|---|---|---|---|
| $\overline{\text{WPUEN}}$ | INTEDG | TMR0CS | TMR0SE | PSA | PS<2:0> | | |
| bit 7 | | | | | | | bit 0 |

| **Legend:** | | |
|---|---|---|
| R = Readable bit | W = Writable bit | U = Unimplemented bit, read as '0' |
| u = Bit is unchanged | x = Bit is unknown | -n/n = Value at POR and BOR/Value at all other Resets |
| '1' = Bit is set | '0' = Bit is cleared | |

bit 7 **$\overline{\text{WPUEN}}$:** Weak Pull-Up Enable bit
1 = All weak pull-ups are disabled (except $\overline{\text{MCLR}}$, if it is enabled)
0 = Weak pull-ups are enabled by individual WPUx latch values

bit 6 **INTEDG:** Interrupt Edge Select bit
1 = Interrupt on rising edge of INT pin
0 = Interrupt on falling edge of INT pin

bit 5 **TMR0CS:** Timer0 Clock Source Select bit
1 = Transition on T0CKI pin
0 = Internal instruction cycle clock (FOSC/4)

bit 4 **TMR0SE:** Timer0 Source Edge Select bit
1 = Increment on high-to-low transition on T0CKI pin
0 = Increment on low-to-high transition on T0CKI pin

bit 3 **PSA:** Prescaler Assignment bit
1 = Prescaler is not assigned to the Timer0 module
0 = Prescaler is assigned to the Timer0 module

bit 2-0 **PS<2:0>:** Prescaler Rate Select bits

| Bit Value | Timer0 Rate |
|---|---|
| 000 | 1 : 2 |
| 001 | 1 : 4 |
| 010 | 1 : 8 |
| 011 | 1 : 16 |
| 100 | 1 : 32 |
| 101 | 1 : 64 |
| 110 | 1 : 128 |
| 111 | 1 : 256 |

**TABLE 24-1: SUMMARY OF REGISTERS ASSOCIATED WITH TIMER0**

| Name | Bit 7 | Bit 6 | Bit 5 | Bit 4 | Bit 3 | Bit 2 | Bit 1 | Bit 0 | Register on Page |
|---|---|---|---|---|---|---|---|---|---|
| INTCON | GIE | PEIE | TMR0IE | INTE | IOCIE | TMR0IF | INTF | IOCIF | 86 |
| OPTION_REG | $\overline{\text{WPUEN}}$ | INTEDG | TMR0CS | TMR0SE | PSA | PS<2:0> | | | 251 |
| TMR0 | Timer0 Module Register | | | | | | | | 249* |
| TRISA | — | — | TRISA5 | TRISA4 | —(1) | TRISA2 | TRISA1 | TRISA0 | 124 |

**Legend:** — = Unimplemented location, read as '0'. Shaded cells are not used by the Timer0 module.
* Page provides register information.
**Note 1:** Unimplemented, read as '1'.

chanhvinh.com



**NOTES:**

chanhvinh.com

 © 2013 Microchip Technology Inc.

chanhvinh.com



## 25.0 TIMER1 MODULE WITH GATE CONTROL

The Timer1 module is a 16-bit timer/counter with the following features:

- 16-bit timer/counter register pair (TMR1H:TMR1L)
- Programmable internal or external clock source
- 2-bit prescaler
- Dedicated 32 kHz oscillator circuit
- Optionally synchronized comparator out
- Multiple Timer1 gate (count enable) sources
- Interrupt on overflow
- Wake-up on overflow (external clock, Asynchronous mode only)
- Time base for the Capture/Compare function
- Auto-conversion Trigger (with CCP)
- Selectable Gate Source Polarity
- Gate Toggle mode
- Gate Single-pulse mode
- Gate Value Status
- Gate Event Interrupt

Figure 25-1 is a block diagram of the Timer1 module.

**FIGURE 25-1: TIMER1 BLOCK DIAGRAM**

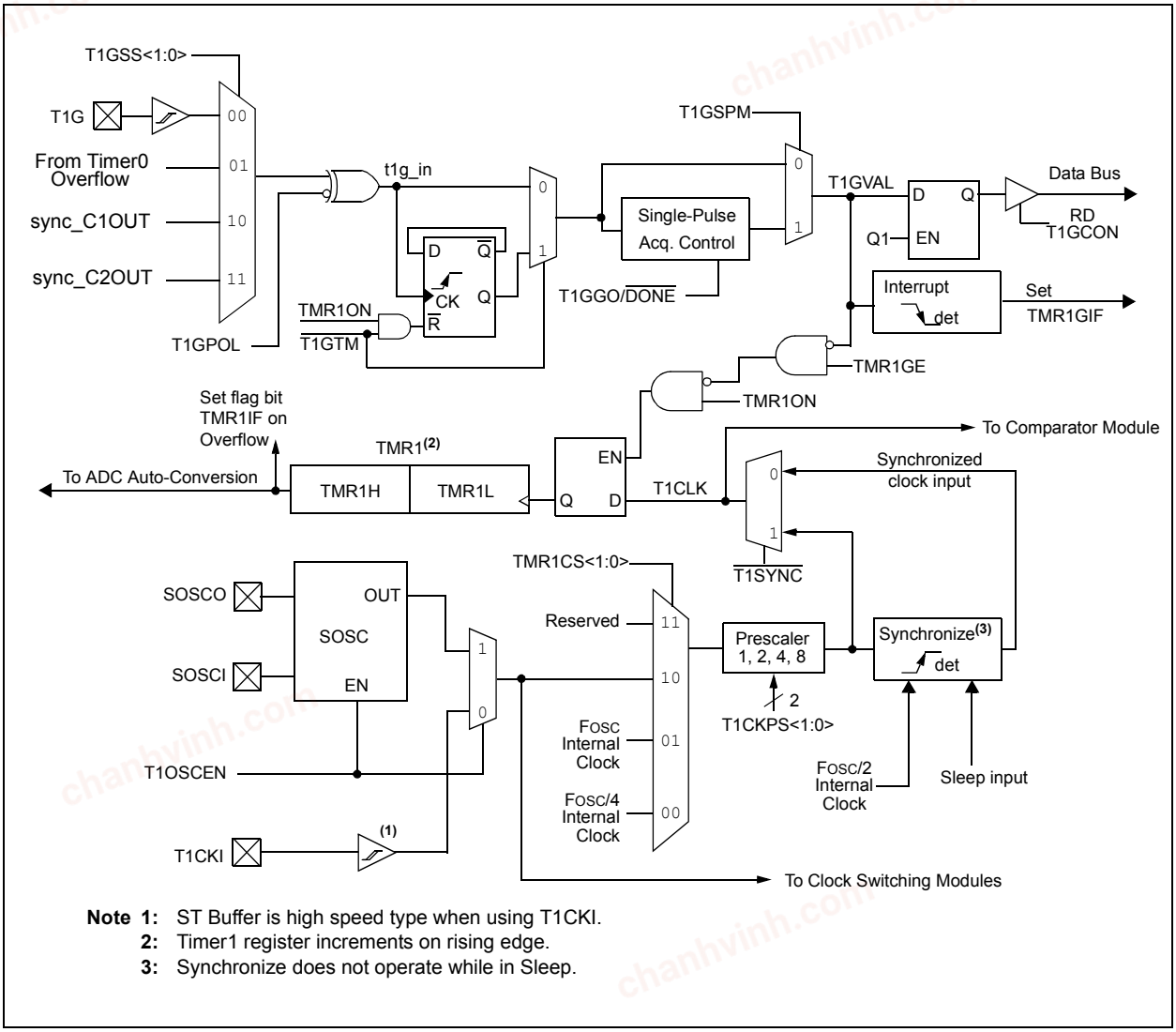


**Note 1:** ST Buffer is high speed type when using T1CKI.
**2:** Timer1 register increments on rising edge.
**3:** Synchronize does not operate while in Sleep.

chanhvinh.com



## 25.1 Timer1 Operation

The Timer1 module is a 16-bit incrementing counter which is accessed through the TMR1H:TMR1L register pair. Writes to TMR1H or TMR1L directly update the counter.

When used with an internal clock source, the module is a timer and increments on every instruction cycle. When used with an external clock source, the module can be used as either a timer or counter and increments on every selected edge of the external source.

Timer1 is enabled by configuring the TMR1ON and TMR1GE bits in the T1CON and T1GCON registers, respectively. Table 25-1 displays the Timer1 enable selections.

**TABLE 25-1: TIMER1 ENABLE SELECTIONS**

| TMR1ON | TMR1GE | Timer1 Operation |
|---|---|---|
| 0 | 0 | Off |
| 0 | 1 | Off |
| 1 | 0 | Always On |
| 1 | 1 | Count Enabled |

## 25.2 Clock Source Selection

The TMR1CS<1:0> and T1OSCEN bits of the T1CON register are used to select the clock source for Timer1. Table 25-2 displays the clock source selections.

### 25.2.1 INTERNAL CLOCK SOURCE

When the internal clock source is selected, the TMR1H:TMR1L register pair will increment on multiples of FOSC as determined by the Timer1 prescaler.

When the FOSC internal clock source is selected, the Timer1 register value will increment by four counts every instruction clock cycle. Due to this condition, a 2 LSB error in resolution will occur when reading the Timer1 value. To utilize the full resolution of Timer1, an asynchronous input signal must be used to gate the Timer1 clock input.

The following asynchronous sources may be used:

- Asynchronous event on the T1G pin to Timer1 gate
- C1 or C2 comparator input to Timer1 gate

### 25.2.2 EXTERNAL CLOCK SOURCE

When the external clock source is selected, the Timer1 module may work as a timer or a counter.

When enabled to count, Timer1 is incremented on the rising edge of the external clock input T1CKI, which can be synchronized to the microcontroller system clock or can run asynchronously.

When used as a timer with a clock oscillator, an external 32.768 kHz crystal can be used in conjunction with the dedicated internal oscillator circuit.

**Note:** In Counter mode, a falling edge must be registered by the counter prior to the first incrementing rising edge after any one or more of the following conditions:

- Timer1 enabled after POR
- Write to TMR1H or TMR1L
- Timer1 is disabled
- Timer1 is disabled (TMR1ON = 0) when T1CKI is high then Timer1 is enabled (TMR1ON=1) when T1CKI is low.

**TABLE 25-2: CLOCK SOURCE SELECTIONS**

| TMR1CS<1:0> | T1OSCEN | Clock Source |
|---|---|---|
| 11 | x | LFINTOSC |
| 10 | 0 | External Clocking on T1CKI Pin |
| 01 | x | System Clock (FOSC) |
| 00 | x | Instruction Clock (FOSC/4) |

 © 2013 Microchip Technology Inc.

chanhvinh.com



## 25.3 Timer1 Prescaler

Timer1 has four prescaler options allowing 1, 2, 4 or 8 divisions of the clock input. The T1CKPS bits of the T1CON register control the prescale counter. The prescale counter is not directly readable or writable; however, the prescaler counter is cleared upon a write to TMR1H or TMR1L.

## 25.4 Timer1 (Secondary) Oscillator

A dedicated low-power 32.768 kHz oscillator circuit is built-in between pins SOSCI (input) and SOSCO (amplifier output). This internal circuit is to be used in conjunction with an external 32.768 kHz crystal.

The oscillator circuit is enabled by setting the T1OSCEN bit of the T1CON register. The oscillator will continue to run during Sleep.

| | |
|---|---|
| **Note:** | The oscillator requires a start-up and stabilization time before use. Thus, T1OSCEN should be set and a suitable delay observed prior to using Timer1. A suitable delay similar to the OST delay can be implemented in software by clearing the TMR1IF bit then presetting the TMR1H:TMR1L register pair to FC00h. The TMR1IF flag will be set when 1024 clock cycles have elapsed, thereby indicating that the oscillator is running and reasonably stable. |

## 25.5 Timer1 Operation in Asynchronous Counter Mode

If the control bit $\overline{\text{T1SYNC}}$ of the T1CON register is set, the external clock input is not synchronized. The timer increments asynchronously to the internal phase clocks. If the external clock source is selected then the timer will continue to run during Sleep and can generate an interrupt on overflow, which will wake-up the processor. However, special precautions in software are needed to read/write the timer (see **Section 25.5.1 "Reading and Writing Timer1 in Asynchronous Counter Mode"**).

| | |
|---|---|
| **Note:** | When switching from synchronous to asynchronous operation, it is possible to skip an increment. When switching from asynchronous to synchronous operation, it is possible to produce an additional increment. |

### 25.5.1 READING AND WRITING TIMER1 IN ASYNCHRONOUS COUNTER MODE

Reading TMR1H or TMR1L while the timer is running from an external asynchronous clock will ensure a valid read (taken care of in hardware). However, the user should keep in mind that reading the 16-bit timer in two 8-bit values itself, poses certain problems, since the timer may overflow between the reads.

For writes, it is recommended that the user simply stop the timer and write the desired values. A write contention may occur by writing to the timer registers, while the register is incrementing. This may produce an unpredictable value in the TMR1H:TMR1L register pair.

## 25.6 Timer1 Gate

Timer1 can be configured to count freely or the count can be enabled and disabled using Timer1 gate circuitry. This is also referred to as Timer1 Gate Enable.

Timer1 gate can also be driven by multiple selectable sources.

### 25.6.1 TIMER1 GATE ENABLE

The Timer1 Gate Enable mode is enabled by setting the TMR1GE bit of the T1GCON register. The polarity of the Timer1 Gate Enable mode is configured using the T1GPOL bit of the T1GCON register.

When Timer1 Gate Enable mode is enabled, Timer1 will increment on the rising edge of the Timer1 clock source. When Timer1 Gate Enable mode is disabled, no incrementing will occur and Timer1 will hold the current count. See Figure 25-3 for timing details.

**TABLE 25-3: TIMER1 GATE ENABLE SELECTIONS**

| T1CLK | T1GPOL | T1G | Timer1 Operation |
|---|---|---|---|
| ↑ | 0 | 0 | Counts |
| ↑ | 0 | 1 | Holds Count |
| ↑ | 1 | 0 | Holds Count |
| ↑ | 1 | 1 | Counts |

chanhvinh.com



### 25.6.2 TIMER1 GATE SOURCE SELECTION

Timer1 gate source selections are shown in Table 25-4. Source selection is controlled by the T1GSS bits of the T1GCON register. The polarity for each available source is also selectable. Polarity selection is controlled by the T1GPOL bit of the T1GCON register.

**TABLE 25-4: TIMER1 GATE SOURCES**

| T1GSS | Timer1 Gate Source |
|---|---|
| 00 | Timer1 Gate Pin |
| 01 | Overflow of Timer0 (TMR0 increments from FFh to 00h) |
| 10 | Comparator 1 Output sync_C1OUT (optionally Timer1 synchronized output) |
| 11 | Comparator 2 Output sync_C2OUT (optionally Timer1 synchronized output) |

#### 25.6.2.1 T1G Pin Gate Operation

The T1G pin is one source for Timer1 gate control. It can be used to supply an external source to the Timer1 gate circuitry.

#### 25.6.2.2 Timer0 Overflow Gate Operation

When Timer0 increments from FFh to 00h, a low-to-high pulse will automatically be generated and internally supplied to the Timer1 gate circuitry.

#### 25.6.2.3 Comparator C1 Gate Operation

The output resulting from a Comparator 1 operation can be selected as a source for Timer1 gate control. The Comparator 1 output (sync_C1OUT) can be synchronized to the Timer1 clock or left asynchronous. For more information see **Section 16.4.1 "Comparator Output Synchronization"**.

#### 25.6.2.4 Comparator C2 Gate Operation

The output resulting from a Comparator 2 operation can be selected as a source for Timer1 gate control. The Comparator 2 output (sync_C2OUT) can be synchronized to the Timer1 clock or left asynchronous. For more information see **Section 16.4.1 "Comparator Output Synchronization"**.

### 25.6.3 TIMER1 GATE TOGGLE MODE

When Timer1 Gate Toggle mode is enabled, it is possible to measure the full-cycle length of a Timer1 gate signal, as opposed to the duration of a single level pulse.

The Timer1 gate source is routed through a flip-flop that changes state on every incrementing edge of the signal. See Figure 25-4 for timing details.

Timer1 Gate Toggle mode is enabled by setting the T1GTM bit of the T1GCON register. When the T1GTM bit is cleared, the flip-flop is cleared and held clear. This is necessary in order to control which edge is measured.

| **Note:** | Enabling Toggle mode at the same time as changing the gate polarity may result in indeterminate operation. |
|---|---|

### 25.6.4 TIMER1 GATE SINGLE-PULSE MODE

When Timer1 Gate Single-Pulse mode is enabled, it is possible to capture a single-pulse gate event. Timer1 Gate Single-Pulse mode is first enabled by setting the T1GSPM bit in the T1GCON register. Next, the T1GGO/$\overline{\text{DONE}}$ bit in the T1GCON register must be set. The Timer1 will be fully enabled on the next incrementing edge. On the next trailing edge of the pulse, the T1GGO/$\overline{\text{DONE}}$ bit will automatically be cleared. No other gate events will be allowed to increment Timer1 until the T1GGO/$\overline{\text{DONE}}$ bit is once again set in software. See Figure 25-5 for timing details.

If the Single-Pulse Gate mode is disabled by clearing the T1GSPM bit in the T1GCON register, the T1GGO/$\overline{\text{DONE}}$ bit should also be cleared.

Enabling the Toggle mode and the Single-Pulse mode simultaneously will permit both sections to work together. This allows the cycle times on the Timer1 gate source to be measured. See Figure 25-6 for timing details.

### 25.6.5 TIMER1 GATE VALUE STATUS

When Timer1 Gate Value Status is utilized, it is possible to read the most current level of the gate control value. The value is stored in the T1GVAL bit in the T1GCON register. The T1GVAL bit is valid even when the Timer1 gate is not enabled (TMR1GE bit is cleared).

### 25.6.6 TIMER1 GATE EVENT INTERRUPT

When Timer1 Gate Event Interrupt is enabled, it is possible to generate an interrupt upon the completion of a gate event. When the falling edge of T1GVAL occurs, the TMR1GIF flag bit in the PIR1 register will be set. If the TMR1GIE bit in the PIE1 register is set, then an interrupt will be recognized.

The TMR1GIF flag bit operates even when the Timer1 gate is not enabled (TMR1GE bit is cleared).

 © 2013 Microchip Technology Inc.

chanhvinh.com



## 25.7 Timer1 Interrupt

The Timer1 register pair (TMR1H:TMR1L) increments to FFFFh and rolls over to 0000h. When Timer1 rolls over, the Timer1 interrupt flag bit of the PIR1 register is set. To enable the interrupt on rollover, you must set these bits:

- TMR1ON bit of the T1CON register
- TMR1IE bit of the PIE1 register
- PEIE bit of the INTCON register
- GIE bit of the INTCON register

The interrupt is cleared by clearing the TMR1IF bit in the Interrupt Service Routine.

| **Note:** | The TMR1H:TMR1L register pair and the TMR1IF bit should be cleared before enabling interrupts. |
|---|---|

## 25.8 Timer1 Operation During Sleep

Timer1 can only operate during Sleep when setup in Asynchronous Counter mode. In this mode, an external crystal or clock source can be used to increment the counter. To set up the timer to wake the device:

- TMR1ON bit of the T1CON register must be set
- TMR1IE bit of the PIE1 register must be set
- PEIE bit of the INTCON register must be set
- $\overline{\text{T1SYNC}}$ bit of the T1CON register must be set
- TMR1CS bits of the T1CON register must be configured
- T1OSCEN bit of the T1CON register must be configured

The device will wake-up on an overflow and execute the next instructions. If the GIE bit of the INTCON register is set, the device will call the Interrupt Service Routine.

Secondary oscillator will continue to operate in Sleep regardless of the $\overline{\text{T1SYNC}}$ bit setting.

## 25.9 CCP Capture/Compare Time Base

The CCP modules use the TMR1H:TMR1L register pair as the time base when operating in Capture or Compare mode.

In Capture mode, the value in the TMR1H:TMR1L register pair is copied into the CCPR1H:CCPR1L register pair on a configured event.

In Compare mode, an event is triggered when the value CCPR1H:CCPR1L register pair matches the value in the TMR1H:TMR1L register pair. This event can be an Auto-conversion Trigger.

For more information, see **Section 27.0 "Capture/Compare/PWM Modules"**.

## 25.10 CCP Auto-Conversion Trigger

When any of the CCP's are configured to trigger an auto-conversion, the trigger will clear the TMR1H:TMR1L register pair. This auto-conversion does not cause a Timer1 interrupt. The CCP module may still be configured to generate a CCP interrupt.

In this mode of operation, the CCPR1H:CCPR1L register pair becomes the period register for Timer1.

Timer1 should be synchronized and FOSC/4 should be selected as the clock source in order to utilize the Auto-conversion Trigger. Asynchronous operation of Timer1 can cause an Auto-conversion Trigger to be missed.

In the event that a write to TMR1H or TMR1L coincides with an Auto-conversion Trigger from the CCP, the write will take precedence.

For more information, see **Section 27.2.4 "Auto-Conversion Trigger"**.

**FIGURE 25-2: TIMER1 INCREMENTING EDGE**

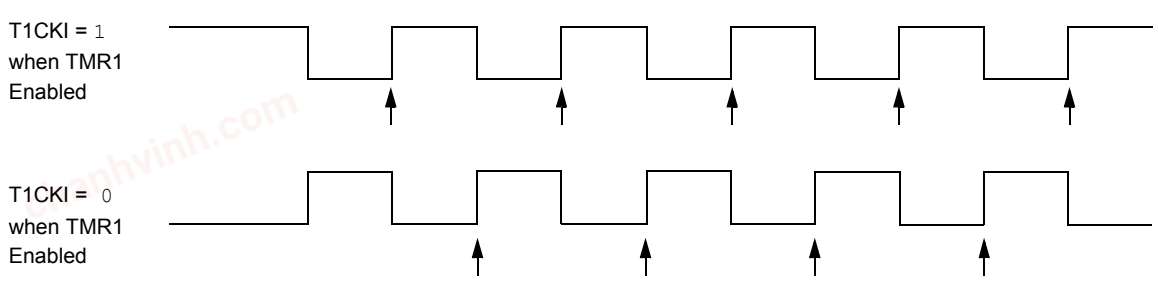


**Note 1:** Arrows indicate counter increments.

**2:** In Counter mode, a falling edge must be registered by the counter prior to the first incrementing rising edge of the clock.

chanhvinh.com



**FIGURE 25-3: TIMER1 GATE ENABLE MODE**

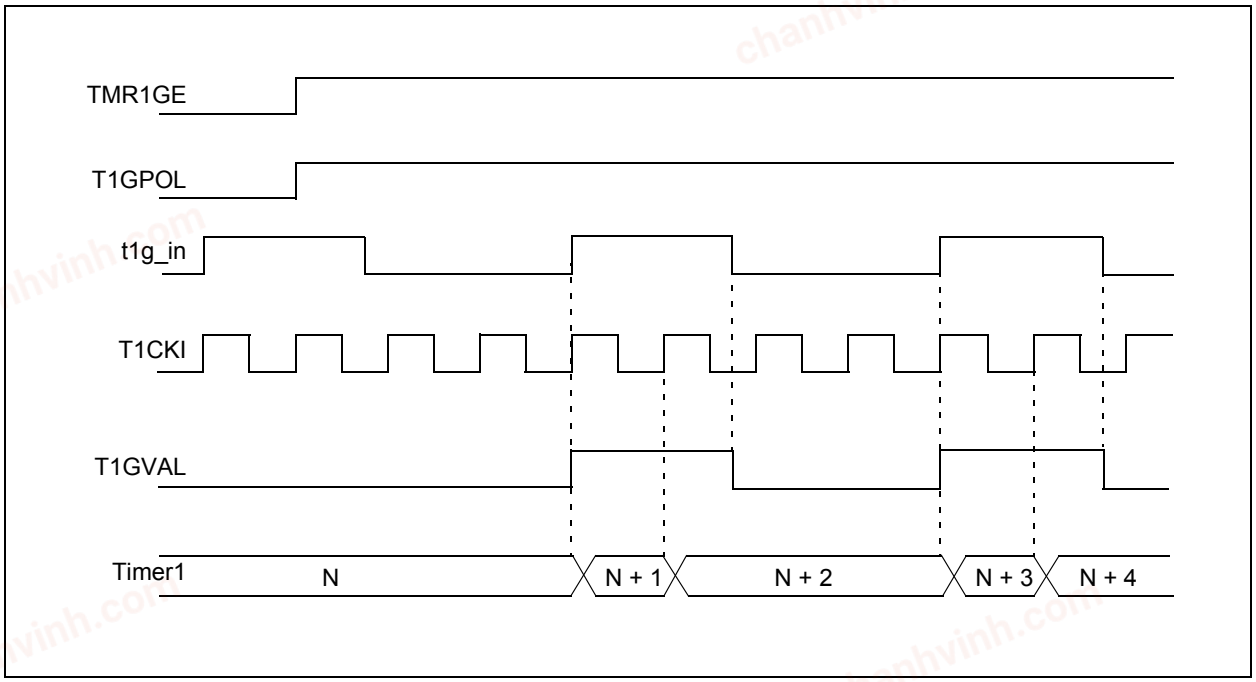


**FIGURE 25-4: TIMER1 GATE TOGGLE MODE**

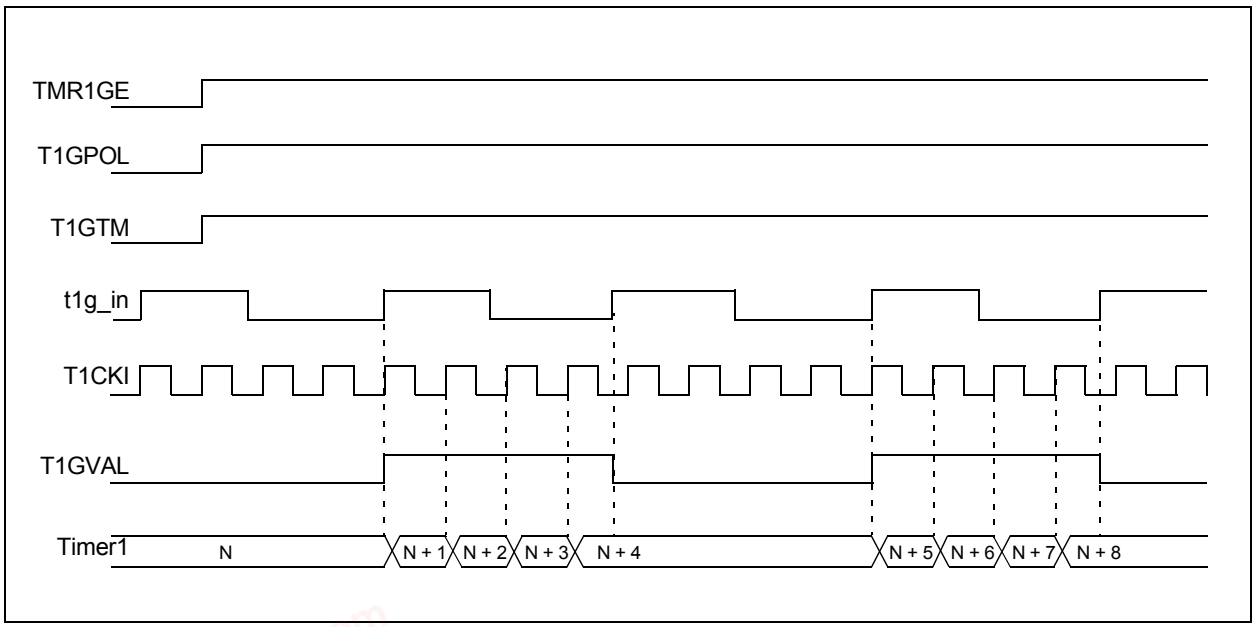


 © 2013 Microchip Technology Inc.

chanhvinh.com



**FIGURE 25-5: TIMER1 GATE SINGLE-PULSE MODE**

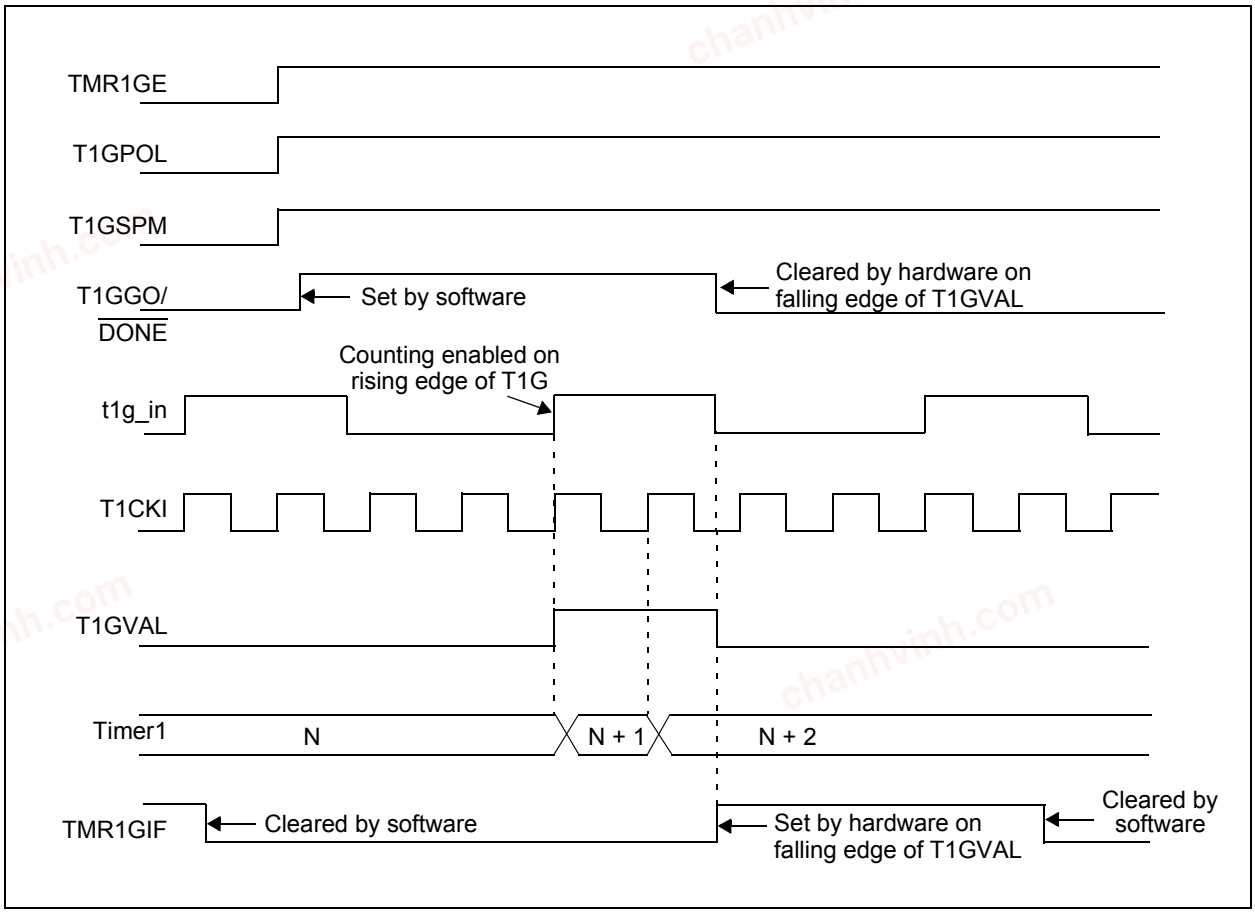

chanhvinh.com



**FIGURE 25-6: TIMER1 GATE SINGLE-PULSE AND TOGGLE COMBINED MODE**

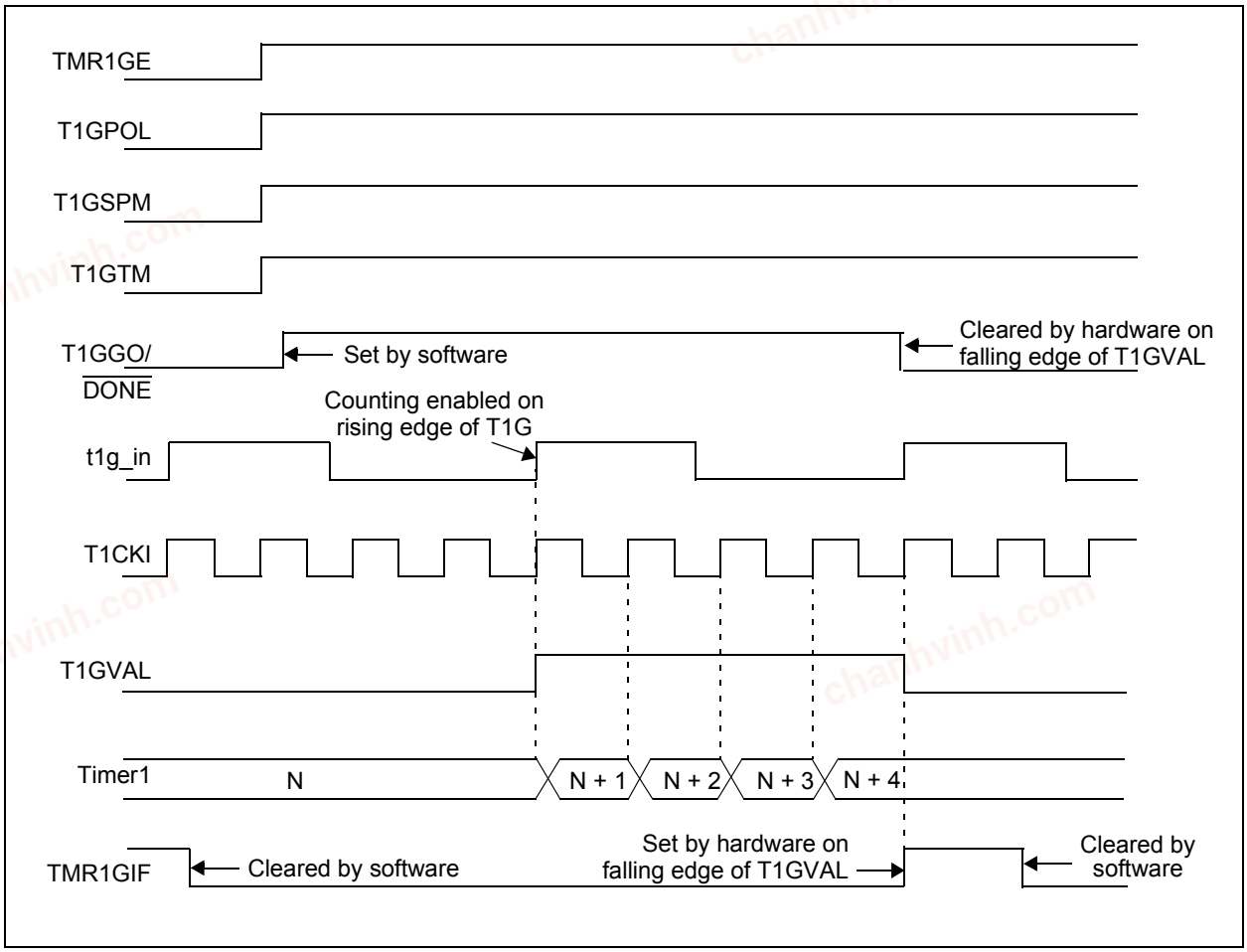


 © 2013 Microchip Technology Inc.

chanhvinh.com



## 25.11 Register Definitions: Timer1 Control

T

**REGISTER 25-1: T1CON: TIMER1 CONTROL REGISTER**

| R/W-0/u | R/W-0/u | R/W-0/u | R/W-0/u | R/W-0/u | R/W-0/u | U-0 | R/W-0/u |
|---|---|---|---|---|---|---|---|
| TMR1CS<1:0> | | T1CKPS<1:0> | | T1OSCEN | $\overline{\text{T1SYNC}}$ | — | TMR1ON |
| bit 7 | | | | | | | bit 0 |

| **Legend:** | | |
|---|---|---|
| R = Readable bit | W = Writable bit | U = Unimplemented bit, read as '0' |
| u = Bit is unchanged | x = Bit is unknown | -n/n = Value at POR and BOR/Value at all other Resets |
| '1' = Bit is set | '0' = Bit is cleared | |

bit 7-6 **TMR1CS<1:0>:** Timer1 Clock Source Select bits
- 11 = Reserved, do not use.
- 10 = Timer1 clock source is pin or oscillator:
  - If T1OSCEN = 0:
  - External clock from T1CKI pin (on the rising edge)
  - If T1OSCEN = 1:
  - Crystal oscillator on SOSCI/SOSCO pins
- 01 = Timer1 clock source is system clock (FOSC)
- 00 = Timer1 clock source is instruction clock (FOSC/4)

bit 5-4 **T1CKPS<1:0>:** Timer1 Input Clock Prescale Select bits
- 11 = 1:8 Prescale value
- 10 = 1:4 Prescale value
- 01 = 1:2 Prescale value
- 00 = 1:1 Prescale value

bit 3 **T1OSCEN:** LP Oscillator Enable Control bit
- 1 = Dedicated secondary oscillator circuit enabled
- 0 = Dedicated secondary oscillator circuit disabled

bit 2 **$\overline{\text{T1SYNC}}$:** Timer1 Synchronization Control bit
- 1 = Do not synchronize asynchronous clock input
- 0 = Synchronize asynchronous clock input with system clock (FOSC)

bit 1 **Unimplemented:** Read as '0'

bit 0 **TMR1ON:** Timer1 On bit
- 1 = Enables Timer1
- 0 = Stops Timer1 and clears Timer1 gate flip-flop

chanhvinh.com



**REGISTER 25-2: T1GCON: TIMER1 GATE CONTROL REGISTER**

| R/W-0/u | R/W-0/u | R/W-0/u | R/W-0/u | R/W/HC-0/u | R-x/x | R/W-0/u | R/W-0/u |
|---|---|---|---|---|---|---|---|
| TMR1GE | T1GPOL | T1GTM | T1GSPM | T1GGO/$\overline{\text{DONE}}$ | T1GVAL | T1GSS<1:0> | |
| bit 7 | | | | | | | bit 0 |

| **Legend:** | | |
|---|---|---|
| R = Readable bit | W = Writable bit | U = Unimplemented bit, read as '0' |
| u = Bit is unchanged | x = Bit is unknown | -n/n = Value at POR and BOR/Value at all other Resets |
| '1' = Bit is set | '0' = Bit is cleared | HC = Bit is cleared by hardware |

bit 7 **TMR1GE:** Timer1 Gate Enable bit

If TMR1ON = 0:
This bit is ignored
If TMR1ON = 1:
1 = Timer1 counting is controlled by the Timer1 gate function
0 = Timer1 counts regardless of Timer1 gate function

bit 6 **T1GPOL:** Timer1 Gate Polarity bit

1 = Timer1 gate is active-high (Timer1 counts when gate is high)
0 = Timer1 gate is active-low (Timer1 counts when gate is low)

bit 5 **T1GTM:** Timer1 Gate Toggle Mode bit

1 = Timer1 Gate Toggle mode is enabled
0 = Timer1 Gate Toggle mode is disabled and toggle flip-flop is cleared
Timer1 gate flip-flop toggles on every rising edge.

bit 4 **T1GSPM:** Timer1 Gate Single-Pulse Mode bit

1 = Timer1 Gate Single-Pulse mode is enabled and is controlling Timer1 gate
0 = Timer1 Gate Single-Pulse mode is disabled

bit 3 **T1GGO/$\overline{\text{DONE}}$:** Timer1 Gate Single-Pulse Acquisition Status bit

1 = Timer1 gate single-pulse acquisition is ready, waiting for an edge
0 = Timer1 gate single-pulse acquisition has completed or has not been started

bit 2 **T1GVAL:** Timer1 Gate Value Status bit

Indicates the current state of the Timer1 gate that could be provided to TMR1H:TMR1L
Unaffected by Timer1 Gate Enable (TMR1GE)

bit 1-0 **T1GSS<1:0>:** Timer1 Gate Source Select bits

11 = Comparator 2 optionally synchronized output (sync_C2OUT)
10 = Comparator 1 optionally synchronized output (sync_C1OUT)
01 = Timer0 overflow output
00 = Timer1 gate pin

 © 2013 Microchip Technology Inc.

chanhvinh.com



**TABLE 25-5: SUMMARY OF REGISTERS ASSOCIATED WITH TIMER1**

| Name | Bit 7 | Bit 6 | Bit 5 | Bit 4 | Bit 3 | Bit 2 | Bit 1 | Bit 0 | Register on Page |
|---|---|---|---|---|---|---|---|---|---|
| ANSELA | — | — | — | ANSA4 | — | ANSA2 | ANSA1 | ANSA0 | 125 |
| CCP1CON | — | — | DC1B<1:0> | | CCP1M<3:0> | | | | 280 |
| CCP2CON | — | — | DC2B<1:0> | | CCP2M<3:0> | | | | 280 |
| INTCON | GIE | PEIE | TMR0IE | INTE | IOCIE | TMR0IF | INTF | IOCIF | 86 |
| PIE1 | TMR1GIE | ADIE | RCIE | TXIE | SSP1IE | CCP1IE | TMR2IE | TMR1IE | 87 |
| PIR1 | TMR1GIF | ADIF | RCIF | TXIF | SSP1IF | CCP1IF | TMR2IF | TMR1IF | 90 |
| TMR1H | Holding Register for the Most Significant Byte of the 16-bit TMR1 Register | | | | | | | | 253* |
| TMR1L | Holding Register for the Least Significant Byte of the 16-bit TMR1 Register | | | | | | | | 253* |
| TRISA | — | — | TRISA5 | TRISA4 | —(1) | TRISA2 | TRISA1 | TRISA0 | 124 |
| T1CON | TMR1CS<1:0> | | T1CKPS<1:0> | | T1OSCEN | $\overline{\text{T1SYNC}}$ | — | TMR1ON | 261 |
| T1GCON | TMR1GE | T1GPOL | T1GTM | T1GSPM | T1GGO/$\overline{\text{DONE}}$ | T1GVAL | T1GSS<1:0> | | 262 |

**Legend:** — = unimplemented location, read as '0'. Shaded cells are not used by the Timer1 module.

* Page provides register information.

**Note 1:** Unimplemented, read as '1'.

chanhvinh.com



**NOTES:**

chanhvinh.com

 © 2013 Microchip Technology Inc.

chanhvinh.com



## 26.0 TIMER2/4/6 MODULE

The Timer2/4/6 modules are 8-bit timers that incorporate the following features:

- 8-bit Timer and Period registers (TMR2 and PR2, respectively)
- Readable and writable (both registers)
- Software programmable prescaler (1:1, 1:4, 1:16, and 1:64)
- Software programmable postscaler (1:1 to 1:16)
- Interrupt on TMR2 match with PR2, respectively
- Optional use as the shift clock for the MSSP module

See Figure 26-1 for a block diagram of Timer2.

Three identical Timer2 modules are implemented on this device. To maintain consistency with earlier devices, the timers are named Timer2, Timer4, and Timer6. All references to Timer2 apply as well to Timer4 and Timer6.

**FIGURE 26-1: TIMER2 BLOCK DIAGRAM**

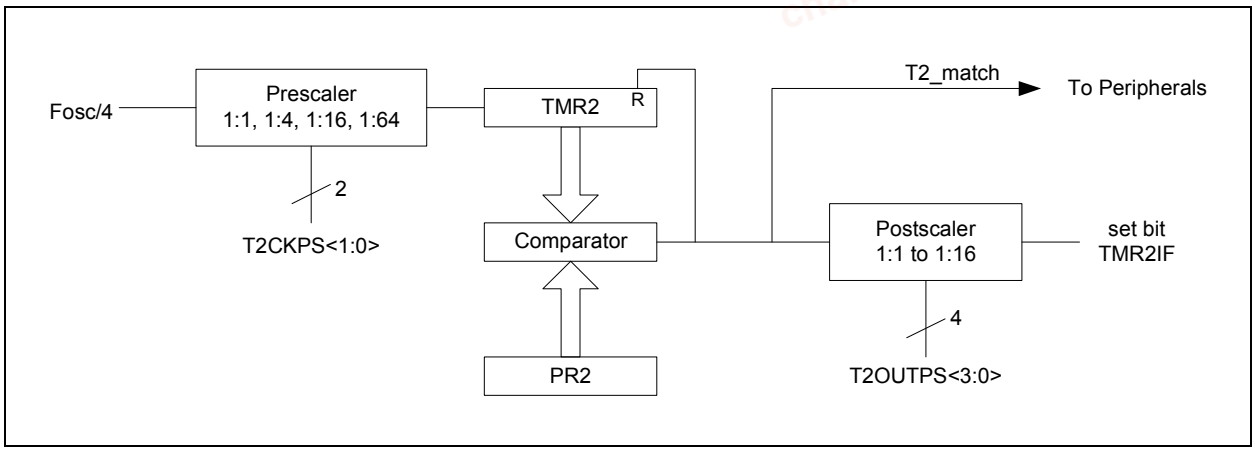

chanhvinh.com



## 26.1 Timer2 Operation

The clock input to the Timer2 modules is the system instruction clock (FOSC/4).

TMR2 increments from 00h on each clock edge.

A 4-bit counter/prescaler on the clock input allows direct input, divide-by-4 and divide-by-16 prescale options. These options are selected by the prescaler control bits, T2CKPS<1:0> of the T2CON register. The value of TMR2 is compared to that of the Period register, PR2, on each clock cycle. When the two values match, the comparator generates a match signal as the timer output. This signal also resets the value of TMR2 to 00h on the next cycle and drives the output counter/postscaler (see **Section 26.2 "Timer2 Interrupt"**).

The TMR2 and PR2 registers are both directly readable and writable. The TMR2 register is cleared on any device Reset, whereas the PR2 register initializes to FFh. Both the prescaler and postscaler counters are cleared on the following events:

- a write to the TMR2 register
- a write to the T2CON register
- Power-on Reset (POR)
- Brown-out Reset (BOR)
- $\overline{\text{MCLR}}$ Reset
- Watchdog Timer (WDT) Reset
- Stack Overflow Reset
- Stack Underflow Reset
- RESET Instruction

| **Note:** | TMR2 is not cleared when T2CON is written. |
|---|---|

## 26.2 Timer2 Interrupt

Timer2 can also generate an optional device interrupt. The Timer2 output signal (TMR2-to-PR2 match) provides the input for the 4-bit counter/postscaler. This counter generates the TMR2 match interrupt flag which is latched in TMR2IF of the PIR1 register. The interrupt is enabled by setting the TMR2 Match Interrupt Enable bit, TMR2IE, of the PIE1 register.

A range of 16 postscale options (from 1:1 through 1:16 inclusive) can be selected with the postscaler control bits, T2OUTPS<3:0>, of the T2CON register.

## 26.3 Timer2 Output

The unscaled output of TMR2 is available primarily to the CCP modules, where it is used as a time base for operations in PWM mode.

Timer2 can be optionally used as the shift clock source for the MSSP module operating in SPI mode. Additional information is provided in **Section 28.0 "Master Synchronous Serial Port (MSSP) Module"**

## 26.4 Timer2 Operation During Sleep

The Timer2 timers cannot be operated while the processor is in Sleep mode. The contents of the TMR2 and PR2 registers will remain unchanged while the processor is in Sleep mode.

 © 2013 Microchip Technology Inc.

chanhvinh.com



## 26.5 Register Definitions: Timer2 Control

**REGISTER 26-1: T2CON: TIMER2 CONTROL REGISTER**

| U-0 | R/W-0/0 | R/W-0/0 | R/W-0/0 | R/W-0/0 | R/W-0/0 | R/W-0/0 | R/W-0/0 |
|---|---|---|---|---|---|---|---|
| — | T2OUTPS<3:0> | | | | TMR2ON | T2CKPS<1:0> | |
| bit 7 | | | | | | | bit 0 |

| **Legend:** | | |
|---|---|---|
| R = Readable bit | W = Writable bit | U = Unimplemented bit, read as '0' |
| u = Bit is unchanged | x = Bit is unknown | -n/n = Value at POR and BOR/Value at all other Resets |
| '1' = Bit is set | '0' = Bit is cleared | |

bit 7 **Unimplemented:** Read as '0'

bit 6-3 **T2OUTPS<3:0>:** Timer2 Output Postscaler Select bits

1111 = 1:16 Postscaler
1110 = 1:15 Postscaler
1101 = 1:14 Postscaler
1100 = 1:13 Postscaler
1011 = 1:12 Postscaler
1010 = 1:11 Postscaler
1001 = 1:10 Postscaler
1000 = 1:9 Postscaler
0111 = 1:8 Postscaler
0110 = 1:7 Postscaler
0101 = 1:6 Postscaler
0100 = 1:5 Postscaler
0011 = 1:4 Postscaler
0010 = 1:3 Postscaler
0001 = 1:2 Postscaler
0000 = 1:1 Postscaler

bit 2 **TMR2ON:** Timer2 On bit

1 = Timer2 is on
0 = Timer2 is off

bit 1-0 **T2CKPS<1:0>:** Timer2 Clock Prescale Select bits

11 = Prescaler is 64
10 = Prescaler is 16
01 = Prescaler is 4
00 = Prescaler is 1

chanhvinh.com



**TABLE 26-1: SUMMARY OF REGISTERS ASSOCIATED WITH TIMER2**

| Name | Bit 7 | Bit 6 | Bit 5 | Bit 4 | Bit 3 | Bit 2 | Bit 1 | Bit 0 | Register on Page |
|---|---|---|---|---|---|---|---|---|---|
| CCP2CON | — | — | DC2B<1:0> | | CCP2M<3:0> | | | | 280 |
| INTCON | GIE | PEIE | TMR0IE | INTE | IOCIE | TMR0IF | INTF | IOCIF | 86 |
| PIE1 | TMR1GIE | ADIE | RCIE | TXIE | SSP1IE | CCP1IE | TMR2IE | TMR1IE | 87 |
| PIR1 | TMR1GIF | ADIF | RCIF | TXIF | SSP1IF | CCP1IF | TMR2IF | TMR1IF | 90 |
| PR2 | Timer2 Module Period Register | | | | | | | | 265* |
| T2CON | — | T2OUTPS<3:0> | | | | TMR2ON | T2CKPS<1:0> | | 267 |
| TMR2 | Holding Register for the 8-bit TMR2 Register | | | | | | | | 265* |

**Legend:** — = unimplemented location, read as '0'. Shaded cells are not used for Timer2 module.

* Page provides register information.

 © 2013 Microchip Technology Inc.

chanhvinh.com



## 26.6 CCP/PWM Clock Selection

The PIC16(L)F1704/8 allows each individual CCP and PWM module to select the timer source that controls the module. Each module has an independent selection.

As there are up to three 8-bit timers with auto-reload (Timer2, Timer4, and Timer6), PWM mode on the CCP and PWM modules can use any of these timers.

The CCPTMRS register is used to select which timer is used.

## 26.7 Register Definitions: CCP/PWM Timers Control

**REGISTER 26-2: CCPTMRS: PWM TIMER SELECTION CONTROL REGISTER 0**

| R/W-0/0 | R/W-0/0 | R/W-0/0 | R/W-0/0 | R/W-0/0 | R/W-0/0 | R/W-0/0 | R/W-0/0 |
|---|---|---|---|---|---|---|---|
| P4TSEL<1:0> | | P3TSEL<1:0> | | C2TSEL<1:0> | | C1TSEL<1:0> | |
| bit 7 | | | | | | | bit 0 |

| **Legend:** | | |
|---|---|---|
| R = Readable bit | W = Writable bit | U = Unimplemented bit, read as ‘0’ |
| u = Bit is unchanged | x = Bit is unknown | -n/n = Value at POR and BOR/Value at all other Resets |
| ‘1’ = Bit is set | ‘0’ = Bit is cleared | |

bit 7-6 **P4TSEL<1:0>:** PWM4 Timer Selection
- 11 = Reserved
- 10 = PWM4 is based off Timer 6
- 01 = PWM4 is based off Timer 4
- 00 = PWM4 is based off Timer 2

bit 5-4 **P3TSEL<1:0>:** PWM3 Timer Selection
- 11 = Reserved
- 10 = PWM3 is based off Timer 6
- 01 = PWM3 is based off Timer 4
- 00 = PWM3 is based off Timer 2

bit 3-2 **C2TSEL<1:0>:** CCP2 (PWM2) Timer Selection
- 11 = Reserved
- 10 = CCP2 is based off Timer 6 in PWM mode
- 01 = CCP2 is based off Timer 4 in PWM mode
- 00 = CCP2 is based off Timer 2 in PWM mode

bit 1-0 **C1TSEL<1:0>:** CCP1 (PWM1) Timer Selection
- 11 = Reserved
- 10 = CCP1 is based off Timer 6 in PWM mode
- 01 = CCP1 is based off Timer 4 in PWM mode
- 00 = CCP1 is based off Timer 2 in PWM mode

chanhvinh.com



**NOTES:**

chanhvinh.com

 © 2013 Microchip Technology Inc.

chanhvinh.com



## 27.0 CAPTURE/COMPARE/PWM MODULES

The Capture/Compare/PWM module is a peripheral which allows the user to time and control different events, and to generate Pulse-Width Modulation (PWM) signals. In Capture mode, the peripheral allows the timing of the duration of an event. The Compare mode allows the user to trigger an external event when a predetermined amount of time has expired. The PWM mode can generate Pulse-Width Modulated signals of varying frequency and duty cycle.

This family of devices contains two standard Capture/Compare/PWM modules (CCP1 and CCP2).

The Capture and Compare functions are identical for all CCP modules.

| | |
|---|---|
| **Note 1:** | In devices with more than one CCP module, it is very important to pay close attention to the register names used. A number placed after the module acronym is used to distinguish between separate modules. For example, the CCP1CON and CCP2CON control the same operational aspects of two completely different CCP modules. |
| **2:** | Throughout this section, generic references to a CCP module in any of its operating modes may be interpreted as being equally applicable to CCPx module. Register names, module signals, I/O pins, and bit names may use the generic designator 'x' to indicate the use of a numeral to distinguish a particular module, when required. |

chanhvinh.com



## 27.1 Capture Mode

The Capture mode function described in this section is available and identical for all CCP modules.

Capture mode makes use of the 16-bit Timer1 resource. When an event occurs on the CCPx pin, the 16-bit CCPRxH:CCPRxL register pair captures and stores the 16-bit value of the TMR1H:TMR1L register pair, respectively. An event is defined as one of the following and is configured by the CCPxM<3:0> bits of the CCPxCON register:

- Every falling edge
- Every rising edge
- Every 4th rising edge
- Every 16th rising edge

When a capture is made, the Interrupt Request Flag bit CCPxIF of the PIRx register is set. The interrupt flag must be cleared in software. If another capture occurs before the value in the CCPRxH, CCPRxL register pair is read, the old captured value is overwritten by the new captured value.

Figure 27-1 shows a simplified diagram of the capture operation.

### 27.1.1 CCP PIN CONFIGURATION

In Capture mode, the CCPx pin should be configured as an input by setting the associated TRIS control bit.

| | |
|---|---|
| **Note:** | If the CCPx pin is configured as an output, a write to the port can cause a capture condition. |

**FIGURE 27-1: CAPTURE MODE OPERATION BLOCK DIAGRAM**

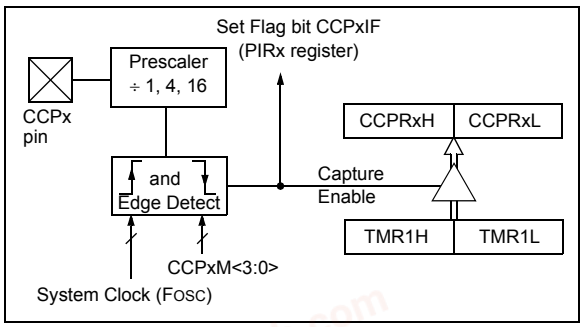


### 27.1.2 TIMER1 MODE RESOURCE

Timer1 must be running in Timer mode or Synchronized Counter mode for the CCP module to use the capture feature. In Asynchronous Counter mode, the capture operation may not work.

See **Section 25.0 "Timer1 Module with Gate Control"** for more information on configuring Timer1.

### 27.1.3 SOFTWARE INTERRUPT MODE

When the Capture mode is changed, a false capture interrupt may be generated. The user should keep the CCPxIE interrupt enable bit of the PIEx register clear to avoid false interrupts. Additionally, the user should clear the CCPxIF interrupt flag bit of the PIRx register following any change in Operating mode.

| | |
|---|---|
| **Note:** | Clocking Timer1 from the system clock (FOSC) should not be used in Capture mode. In order for Capture mode to recognize the trigger event on the CCPx pin, Timer1 must be clocked from the instruction clock (FOSC/4) or from an external clock source. |

### 27.1.4 CCP PRESCALER

There are four prescaler settings specified by the CCPxM<3:0> bits of the CCPxCON register. Whenever the CCP module is turned off, or the CCP module is not in Capture mode, the prescaler counter is cleared. Any Reset will clear the prescaler counter.

Switching from one capture prescaler to another does not clear the prescaler and may generate a false interrupt. To avoid this unexpected operation, turn the module off by clearing the CCPxCON register before changing the prescaler. Example 27-1 demonstrates the code to perform this function.

**EXAMPLE 27-1: CHANGING BETWEEN CAPTURE PRESCALERS**

```
BANKSEL CCPxCON     ;Set Bank bits to point
                    ;to CCPxCON
CLRF    CCPxCON     ;Turn CCP module off
MOVLW   NEW_CAPT_PS;Load the W reg with
                    ;the new prescaler
                    ;move value and CCP ON
MOVWF   CCPxCON     ;Load CCPxCON with this
                    ;value
```

 © 2013 Microchip Technology Inc.

chanhvinh.com



### 27.1.5 CAPTURE DURING SLEEP

Capture mode depends upon the Timer1 module for proper operation. There are two options for driving the Timer1 module in Capture mode. It can be driven by the instruction clock (FOSC/4), or by an external clock source.

When Timer1 is clocked by FOSC/4, Timer1 will not increment during Sleep. When the device wakes from Sleep, Timer1 will continue from its previous state.

Capture mode will operate during Sleep when Timer1 is clocked by an external clock source.

chanhvinh.com



## 27.2 Compare Mode

The Compare mode function described in this section is available and identical for all CCP modules.

Compare mode makes use of the 16-bit Timer1 resource. The 16-bit value of the CCPRxH:CCPRxL register pair is constantly compared·against the 16-bit value of the TMR1H:TMR1L register pair. When a match occurs, one of the following events can occur:

- Toggle the CCPx output
- Set the CCPx output
- Clear the CCPx output
- Generate an Auto-conversion Trigger
- Generate a Software Interrupt

The action on the pin is based on the value of the CCPxM<3:0> control bits of the CCPxCON register. At the same time, the interrupt flag CCPxIF bit is set.

All Compare modes can generate an interrupt.

Figure 27-2 shows a simplified diagram of the compare operation.

**FIGURE 27-2: COMPARE MODE OPERATION BLOCK DIAGRAM**

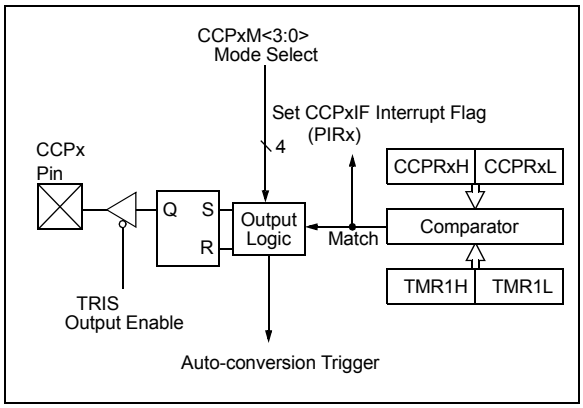


### 27.2.1 CCPX PIN CONFIGURATION

The user must configure the CCPx pin as an output by clearing the associated TRIS bit.

| | |
|---|---|
| **Note:** | Clearing the CCPxCON register will force the CCPx compare output latch to the default low level. This is not the PORT I/O data latch. |

### 27.2.2 TIMER1 MODE RESOURCE

In Compare mode, Timer1 must be running in either Timer mode or Synchronized Counter mode. The compare operation may not work in Asynchronous Counter mode.

See **Section 25.0 "Timer1 Module with Gate Control"** for more information on configuring Timer1.

| | |
|---|---|
| **Note:** | Clocking Timer1 from the system clock (FOSC) should not be used in Compare mode. In order for Compare mode to recognize the trigger event on the CCPx pin, TImer1 must be clocked from the instruction clock (FOSC/4) or from an external clock source. |

### 27.2.3 SOFTWARE INTERRUPT MODE

When Generate Software Interrupt mode is chosen (CCPxM<3:0> = 1010), the CCPx module does not assert control of the CCPx pin (see the CCPxCON register).

### 27.2.4 AUTO-CONVERSION TRIGGER

When Auto-conversion Trigger mode is chosen (CCPxM<3:0> = 1011), the CCPx module does the following:

- Resets Timer1
- Starts an ADC conversion if ADC is enabled

The CCPx module does not assert control of the CCPx pin in this mode.

The Auto-conversion Trigger output of the CCP occurs immediately upon a match between the TMR1H, TMR1L register pair and the CCPRxH, CCPRxL register pair. The TMR1H, TMR1L register pair is not reset until the next rising edge of the Timer1 clock. The Auto-conversion Trigger output starts an ADC conversion (if the ADC module is enabled). This allows the CCPRxH, CCPRxL register pair to effectively provide a 16-bit programmable period register for Timer1.

Refer to **Section 20.2.5 "Auto-Conversion Trigger"** for more information.

| | |
|---|---|
| **Note 1:** | The Auto-conversion Trigger from the CCP module does not set interrupt flag bit TMR1IF of the PIR1 register. |
| **2:** | Removing the match condition by changing the contents of the CCPRxH and CCPRxL register pair, between the clock edge that generates the Auto-conversion Trigger and the clock edge that generates the Timer1 Reset, will preclude the Reset from occurring. |

 © 2013 Microchip Technology Inc.

chanhvinh.com



### 27.2.5 COMPARE DURING SLEEP

The Compare mode is dependent upon the system clock (FOSC) for proper operation. Since FOSC is shut down during Sleep mode, the Compare mode will not function properly during Sleep.

chanhvinh.com

chanhvinh.com



## 27.3 PWM Overview

Pulse-Width Modulation (PWM) is a scheme that provides power to a load by switching quickly between fully on and fully off states. The PWM signal resembles a square wave where the high portion of the signal is considered the on state and the low portion of the signal is considered the off state. The high portion, also known as the pulse width, can vary in time and is defined in steps. A larger number of steps applied, which lengthens the pulse width, also supplies more power to the load. Lowering the number of steps applied, which shortens the pulse width, supplies less power. The PWM period is defined as the duration of one complete cycle or the total amount of on and off time combined.

PWM resolution defines the maximum number of steps that can be present in a single PWM period. A higher resolution allows for more precise control of the pulse width time and in turn the power that is applied to the load.

The term duty cycle describes the proportion of the on time to the off time and is expressed in percentages, where 0% is fully off and 100% is fully on. A lower duty cycle corresponds to less power applied and a higher duty cycle corresponds to more power applied.

Figure 27-3 shows a typical waveform of the PWM signal.

### 27.3.1 STANDARD PWM OPERATION

The standard PWM function described in this section is available and identical for all CCP modules.

The standard PWM mode generates a Pulse-Width Modulation (PWM) signal on the CCPx pin with up to 10 bits of resolution. The period, duty cycle, and resolution are controlled by the following registers:

- PR2 registers
- T2CON registers
- CCPRxL registers
- CCPxCON registers

Figure 27-4 shows a simplified block diagram of PWM operation.

| | |
|---|---|
| **Note:** | The corresponding TRIS bit must be cleared to enable the PWM output on the CCPx pin. |

**FIGURE 27-3: CCP PWM OUTPUT SIGNAL**

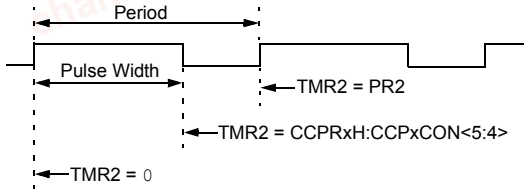


**FIGURE 27-4: SIMPLIFIED PWM BLOCK DIAGRAM**

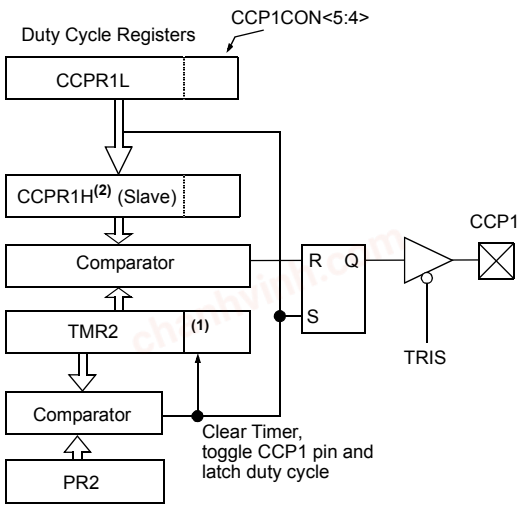


**Note 1:** The 8-bit timer TMR2 register is concatenated with the 2-bit internal system clock (FOSC), or two bits of the prescaler, to create the 10-bit time base.

**2:** In PWM mode, CCPR1H is a read-only register.

 © 2013 Microchip Technology Inc.

chanhvinh.com



### 27.3.2 SETUP FOR PWM OPERATION

The following steps should be taken when configuring the CCP module for standard PWM operation:

1. Use the desired output pin RxyPPS control to select CCPx as the source and disable the CCPx pin output driver by setting the associated TRIS bit.
2. Load the PR2 register with the PWM period value.
3. Configure the CCP module for the PWM mode by loading the CCPxCON register with the appropriate values.
4. Load the CCPRxL register and the DCxBx bits of the CCPxCON register, with the PWM duty cycle value.
5. Configure and start Timer2:
   - Clear the TMR2IF interrupt flag bit of the PIRx register. See Note below.
   - Configure the T2CKPS bits of the T2CON register with the Timer prescale value.
   - Enable the Timer by setting the TMR2ON bit of the T2CON register.
6. Enable PWM output pin:
   - Wait until the Timer overflows and the TMR2IF bit of the PIR1 register is set. See Note below.
   - Enable the CCPx pin output driver by clearing the associated TRIS bit.

| **Note:** | In order to send a complete duty cycle and period on the first PWM output, the above steps must be included in the setup sequence. If it is not critical to start with a complete PWM signal on the first output, then step 6 may be ignored. |
|---|---|

### 27.3.3 TIMER2 TIMER RESOURCE

The PWM standard mode makes use of the 8-bit Timer2 timer resources to specify the PWM period.

### 27.3.4 PWM PERIOD

The PWM period is specified by the PR2 register of Timer2. The PWM period can be calculated using the formula of Equation 27-1.

**EQUATION 27-1: PWM PERIOD**

$$PWM\ Period = [(PR2) + 1] \bullet 4 \bullet TOSC \bullet (TMR2\ Prescale\ Value)$$

**Note 1:** TOSC = 1/FOSC

When TMR2 is equal to PR2, the following three events occur on the next increment cycle:

- TMR2 is cleared
- The CCPx pin is set. (Exception: If the PWM duty cycle = 0%, the pin will not be set.)
- The PWM duty cycle is latched from CCPRxL into CCPRxH.

| **Note:** | The Timer postscaler (see **Section 26.1 "Timer2 Operation"**) is not used in the determination of the PWM frequency. |
|---|---|

### 27.3.5 PWM DUTY CYCLE

The PWM duty cycle is specified by writing a 10-bit value to multiple registers: CCPRxL register and DCxB<1:0> bits of the CCPxCON register. The CCPRxL contains the eight MSbs and the DCxB<1:0> bits of the CCPxCON register contain the two LSbs. CCPRxL and DCxB<1:0> bits of the CCPxCON register can be written to at any time. The duty cycle value is not latched into CCPRxH until after the period completes (i.e., a match between PR2 and TMR2 registers occurs). While using the PWM, the CCPRxH register is read-only.

Equation 27-2 is used to calculate the PWM pulse width.

Equation 27-3 is used to calculate the PWM duty cycle ratio.

**EQUATION 27-2: PULSE WIDTH**

$$Pulse\ Width = (CCPRxL:CCPxCON<5:4>) \bullet TOSC \bullet (TMR2\ Prescale\ Value)$$

**EQUATION 27-3: DUTY CYCLE RATIO**

$$Duty\ Cycle\ Ratio = \frac{(CCPRxL:CCPxCON<5:4>)}{4(PR2 + 1)}$$

The CCPRxH register and a 2-bit internal latch are used to double buffer the PWM duty cycle. This double buffering is essential for glitchless PWM operation.

The 8-bit timer TMR2 register is concatenated with either the 2-bit internal system clock (FOSC), or two bits of the prescaler, to create the 10-bit time base. The system clock is used if the Timer2 prescaler is set to 1:1.

When the 10-bit time base matches the CCPRxH and 2-bit latch, then the CCPx pin is cleared (see Figure 27-4).

chanhvinh.com



### 27.3.6 PWM RESOLUTION

The resolution determines the number of available duty cycles for a given period. For example, a 10-bit resolution will result in 1024 discrete duty cycles, whereas an 8-bit resolution will result in 256 discrete duty cycles.

The maximum PWM resolution is 10 bits when PR2 is 255. The resolution is a function of the PR2 register value as shown by Equation 27-4.

**EQUATION 27-4: PWM RESOLUTION**

$$Resolution = \frac{log[4(PR2 + 1)]}{log(2)} \ bits$$

**Note:** If the pulse width value is greater than the period the assigned PWM pin(s) will remain unchanged.

**TABLE 27-1: EXAMPLE PWM FREQUENCIES AND RESOLUTIONS (FOSC = 20 MHz)**

| PWM Frequency | 1.22 kHz | 4.88 kHz | 19.53 kHz | 78.12 kHz | 156.3 kHz | 208.3 kHz |
|---|---|---|---|---|---|---|
| Timer Prescale | 16 | 4 | 1 | 1 | 1 | 1 |
| PR2 Value | 0xFF | 0xFF | 0xFF | 0x3F | 0x1F | 0x17 |
| Maximum Resolution (bits) | 10 | 10 | 10 | 8 | 7 | 6.6 |

**TABLE 27-2: EXAMPLE PWM FREQUENCIES AND RESOLUTIONS (FOSC = 8 MHz)**

| PWM Frequency | 1.22 kHz | 4.90 kHz | 19.61 kHz | 76.92 kHz | 153.85 kHz | 200.0 kHz |
|---|---|---|---|---|---|---|
| Timer Prescale | 16 | 4 | 1 | 1 | 1 | 1 |
| PR2 Value | 0x65 | 0x65 | 0x65 | 0x19 | 0x0C | 0x09 |
| Maximum Resolution (bits) | 8 | 8 | 8 | 6 | 5 | 5 |

 © 2013 Microchip Technology Inc.

chanhvinh.com



### 27.3.7 OPERATION IN SLEEP MODE

In Sleep mode, the TMR2 register will not increment and the state of the module will not change. If the CCPx pin is driving a value, it will continue to drive that value. When the device wakes up, TMR2 will continue from its previous state.

### 27.3.8 CHANGES IN SYSTEM CLOCK FREQUENCY

The PWM frequency is derived from the system clock frequency. Any changes in the system clock frequency will result in changes to the PWM frequency. See **Section 6.0 "Oscillator Module (with Fail-Safe Clock Monitor)"** for additional details.

### 27.3.9 EFFECTS OF RESET

Any Reset will force all ports to Input mode and the CCP registers to their Reset states.

**TABLE 27-3: SUMMARY OF REGISTERS ASSOCIATED WITH STANDARD PWM**

| Name | Bit 7 | Bit 6 | Bit 5 | Bit 4 | Bit 3 | Bit 2 | Bit 1 | Bit 0 | Register on Page |
|---|---|---|---|---|---|---|---|---|---|
| CCP1CON | — | — | DC1B<1:0> | | CCP1M<3:0> | | | | 280 |
| CCPR1L | Capture/Compare/PWM Register 1 (LSB) | | | | | | | | 277* |
| CCPTMRS | P4TSEL<1:0> | | P3TSEL<1:0> | | C2TSEL<1:0> | | C1TSEL<1:0> | | 269 |
| INTCON | GIE | PEIE | TMR0IE | INTE | IOCIE | TMR0IF | INTF | IOCIF | 86 |
| PIE1 | TMR1GIE | ADIE | RCIE | TXIE | SSP1IE | CCP1IE | TMR2IE | TMR1IE | 87 |
| PIE2 | OSFIE | C2IE | C1IE | — | BCL1IE | TMR6IE | TMR4IE | CCP2IE | 88 |
| PIR1 | TMR1GIF | ADIF | RCIF | TXIF | SSP1IF | CCP1IF | TMR2IF | TMR1IF | 90 |
| PIR2 | OSFIF | C2IF | C1IF | — | BCL1IF | TMR6IF | TMR4IF | CCP2IF | 91 |
| PR2 | Timer2 Period Register | | | | | | | | 265* |
| RxyPPS | — | — | — | RxyPPS<4:0> | | | | | 143 |
| T2CON | — | T2OUTPS<3:0> | | | | TMR2ON | T2CKPS<1:0> | | 267 |
| TMR2 | Timer2 Module Register | | | | | | | | 265 |

**Legend:** — = Unimplemented location, read as '0'. Shaded cells are not used by the PWM.
* Page provides register information.
**Note 1:** Unimplemented, read as '1'.

chanhvinh.com



## 27.4 Register Definitions: CCP Control

### REGISTER 27-1: CCPxCON: CCPx CONTROL REGISTER

| U-0 | U-0 | R/W-0/0 | R/W-0/0 | R/W-0/0 | R/W-0/0 | R/W-0/0 | R/W-0/0 |
|---|---|---|---|---|---|---|---|
| — | — | DCxB<1:0> | | CCPxM<3:0> | | | |
| bit 7 | | | | | | | bit 0 |

| **Legend:** | | |
|---|---|---|
| R = Readable bit | W = Writable bit | U = Unimplemented bit, read as '0' |
| u = Bit is unchanged | x = Bit is unknown | -n/n = Value at POR and BOR/Value at all other Reset |
| '1' = Bit is set | '0' = Bit is cleared | |

bit 7-6 **Unimplemented:** Read as '0'

bit 5-4 **DCxB<1:0>:** PWM Duty Cycle Least Significant bits

Capture mode:
Unused

Compare mode:
Unused

PWM mode:
These bits are the two LSbs of the PWM duty cycle. The eight MSbs are found in CCPRxL.

bit 3-0 **CCPxM<3:0>:** CCPx Mode Select bits

11xx = PWM mode

1011 = Compare mode: Auto-conversion Trigger (sets CCPxIF bit), starts ADC conversion if TRIGSEL = CCPx (see Register 20-3)
1010 = Compare mode: generate software interrupt only
1001 = Compare mode: clear output on compare match (set CCPxIF)
1000 = Compare mode: set output on compare match (set CCPxIF)

0111 = Capture mode: every 16th rising edge
0110 = Capture mode: every 4th rising edge
0101 = Capture mode: every rising edge
0100 = Capture mode: every falling edge

0011 = Reserved
0010 = Compare mode: toggle output on match
0001 = Reserved
0000 = Capture/Compare/PWM off (resets CCPx module)

 © 2013 Microchip Technology Inc.

chanhvinh.com



# 28.0 MASTER SYNCHRONOUS SERIAL PORT (MSSP) MODULE

## 28.1 MSSP Module Overview

The Master Synchronous Serial Port (MSSP) module is a serial interface useful for communicating with other peripheral or microcontroller devices. These peripheral devices may be serial EEPROMs, shift registers, display drivers, A/D converters, etc. The MSSP module can operate in one of two modes:

- Serial Peripheral Interface (SPI)
- Inter-Integrated Circuit ($I^2C$™)

The SPI interface supports the following modes and features:

- Master mode
- Slave mode
- Clock Parity
- Slave Select Synchronization (Slave mode only)
- Daisy-chain connection of slave devices

Figure 28-1 is a block diagram of the SPI interface module.

**FIGURE 28-1: MSSP BLOCK DIAGRAM (SPI MODE)**

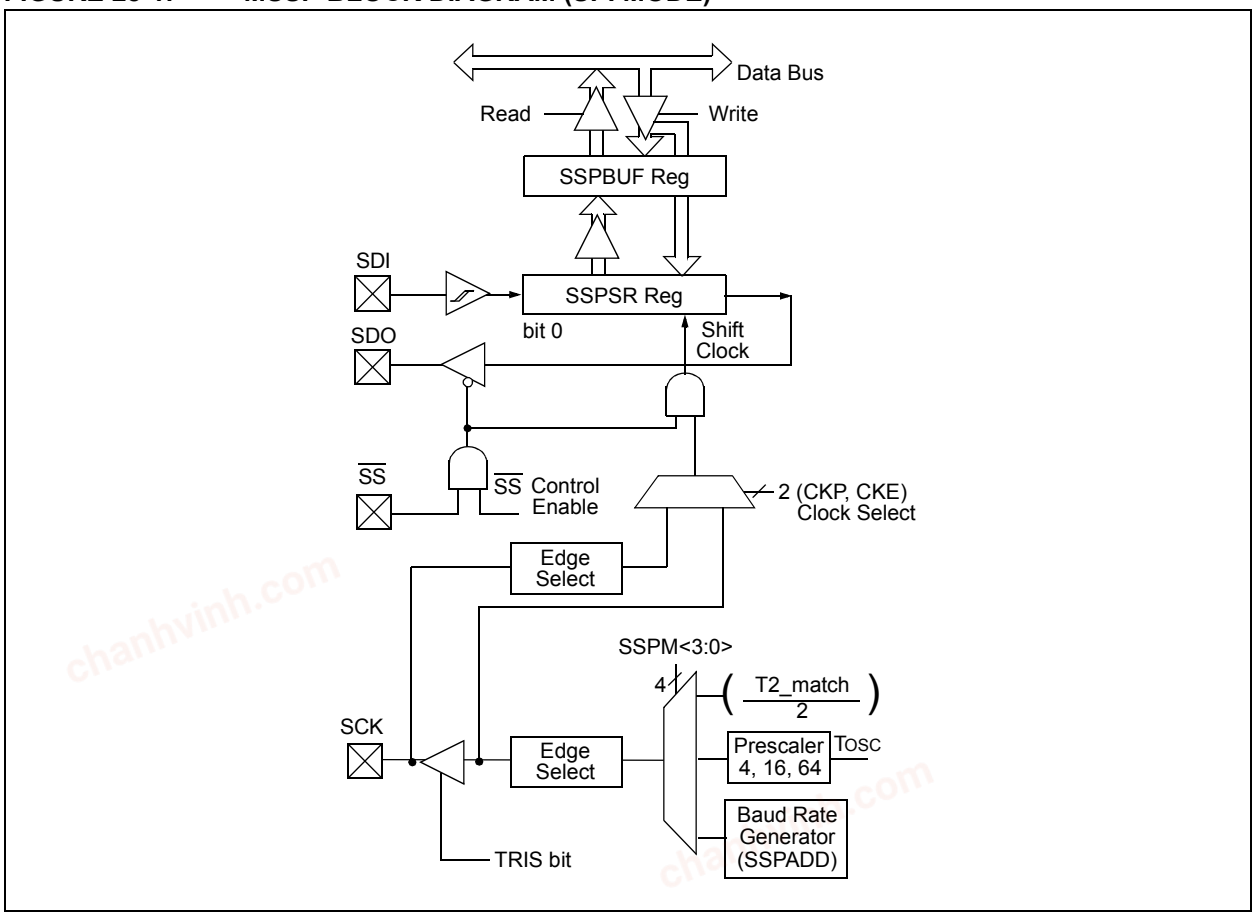

chanhvinh.com



The I²C interface supports the following modes and features:

- Master mode
- Slave mode
- Byte NACKing (Slave mode)
- Limited multi-master support
- 7-bit and 10-bit addressing
- Start and Stop interrupts
- Interrupt masking
- Clock stretching
- Bus collision detection
- General call address matching
- Address masking
- Address Hold and Data Hold modes
- Selectable SDA hold times

Figure 28-2 is a block diagram of the I²C interface module in Master mode. Figure 28-3 is a diagram of the I²C interface module in Slave mode.

**FIGURE 28-2: MSSP BLOCK DIAGRAM (I²C™ MASTER MODE)**

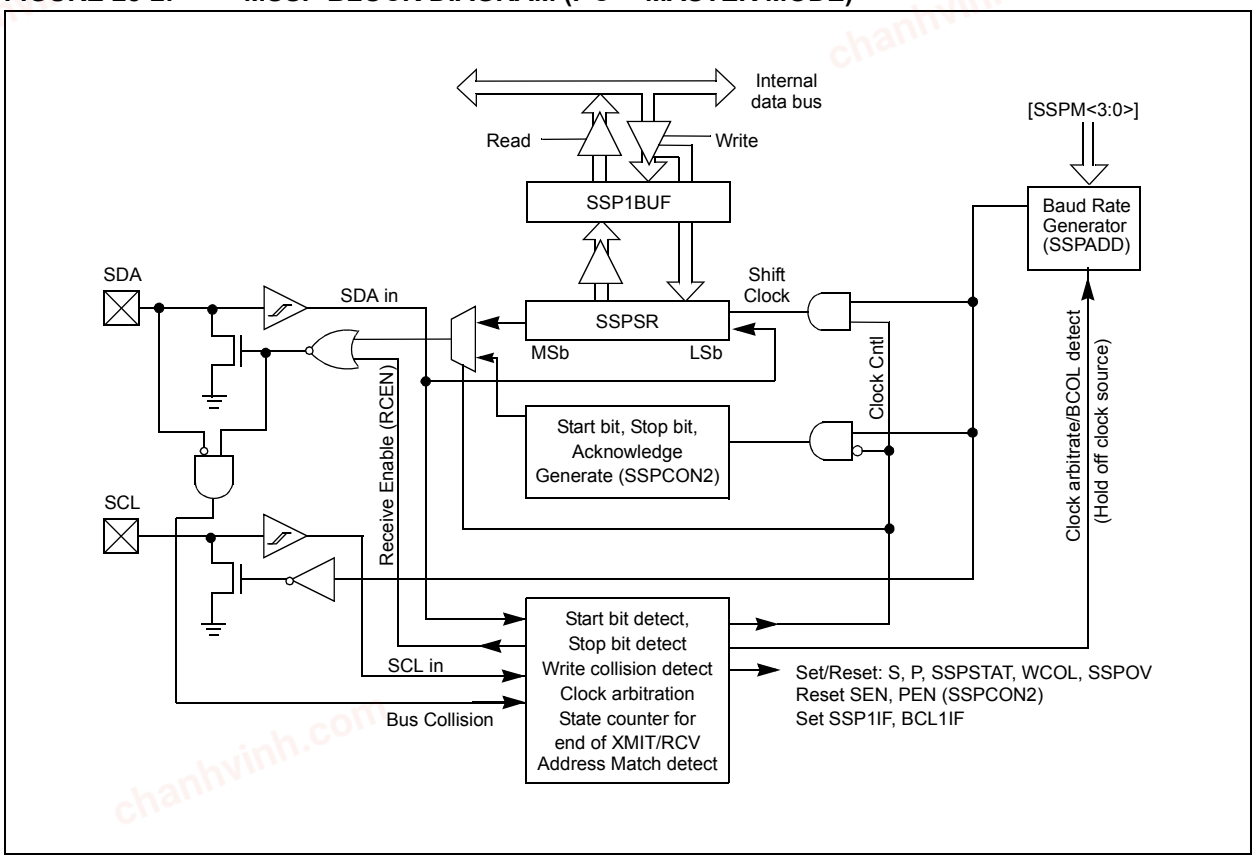


 © 2013 Microchip Technology Inc.

chanhvinh.com



**FIGURE 28-3: MSSP BLOCK DIAGRAM ($I^2C$™ SLAVE MODE)**

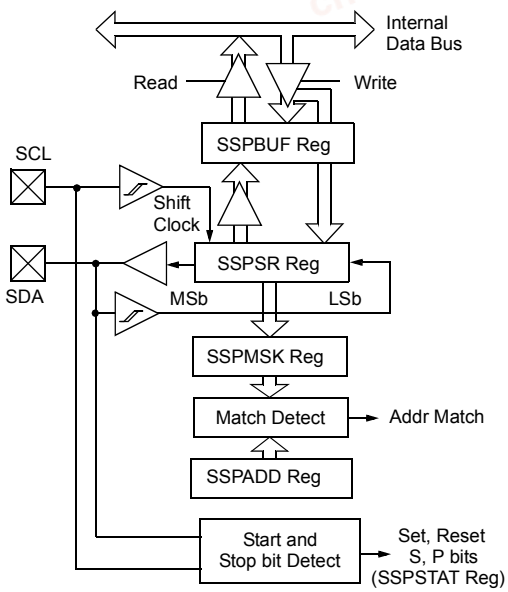

chanhvinh.com



## 28.2 SPI Mode Overview

The Serial Peripheral Interface (SPI) bus is a synchronous serial data communication bus that operates in Full-Duplex mode. Devices communicate in a master/slave environment where the master device initiates the communication. A slave device is controlled through a Chip Select known as Slave Select.

The SPI bus specifies four signal connections:

- Serial Clock (SCK)
- Serial Data Out (SDO)
- Serial Data In (SDI)
- Slave Select ($\overline{SS}$)

Figure 28-1 shows the block diagram of the MSSP module when operating in SPI mode.

The SPI bus operates with a single master device and one or more slave devices. When multiple slave devices are used, an independent Slave Select connection is required from the master device to each slave device.

Figure 28-4 shows a typical connection between a master device and multiple slave devices.

The master selects only one slave at a time. Most slave devices have tri-state outputs so their output signal appears disconnected from the bus when they are not selected.

Transmissions involve two shift registers, eight bits in size, one in the master and one in the slave. With either the master or the slave device, data is always shifted out one bit at a time, with the Most Significant bit (MSb) shifted out first. At the same time, a new Least Significant bit (LSb) is shifted into the same register.

Figure 28-5 shows a typical connection between two processors configured as master and slave devices.

Data is shifted out of both shift registers on the programmed clock edge and latched on the opposite edge of the clock.

The master device transmits information out on its SDO output pin which is connected to, and received by, the slave's SDI input pin. The slave device transmits information out on its SDO output pin, which is connected to, and received by, the master's SDI input pin.

To begin communication, the master device first sends out the clock signal. Both the master and the slave devices should be configured for the same clock polarity.

The master device starts a transmission by sending out the MSb from its shift register. The slave device reads this bit from that same line and saves it into the LSb position of its shift register.

During each SPI clock cycle, a full-duplex data transmission occurs. This means that while the master device is sending out the MSb from its shift register (on its SDO pin) and the slave device is reading this bit and saving it as the LSb of its shift register, that the slave device is also sending out the MSb from its shift register (on its SDO pin) and the master device is reading this bit and saving it as the LSb of its shift register.

After eight bits have been shifted out, the master and slave have exchanged register values.

If there is more data to exchange, the shift registers are loaded with new data and the process repeats itself.

Whether the data is meaningful or not (dummy data), depends on the application software. This leads to three scenarios for data transmission:

- Master sends useful data and slave sends dummy data.
- Master sends useful data and slave sends useful data.
- Master sends dummy data and slave sends useful data.

Transmissions may involve any number of clock cycles. When there is no more data to be transmitted, the master stops sending the clock signal and it deselects the slave.

Every slave device connected to the bus that has not been selected through its slave select line must disregard the clock and transmission signals and must not transmit out any data of its own.

 © 2013 Microchip Technology Inc.

chanhvinh.com



**FIGURE 28-4: SPI MASTER AND MULTIPLE SLAVE CONNECTION**

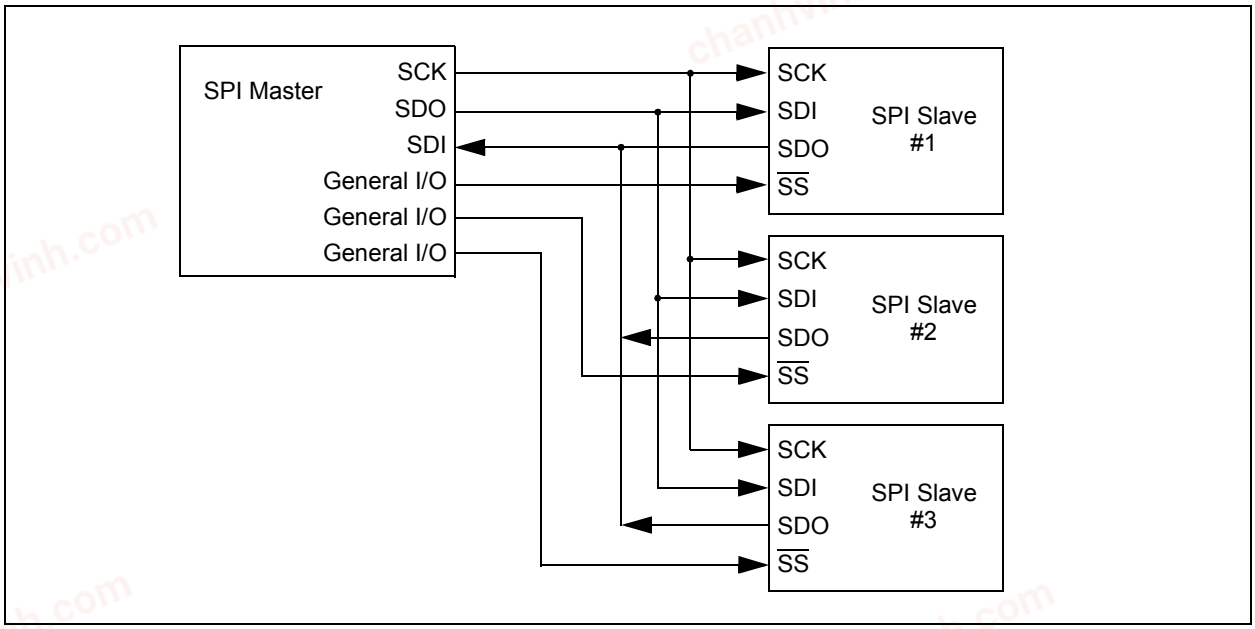


### 28.2.1 SPI MODE REGISTERS

The MSSP module has five registers for SPI mode operation. These are:

- MSSP STATUS register (SSPSTAT)
- MSSP Control register 1 (SSPCON1)
- MSSP Control register 3 (SSPCON3)
- MSSP Data Buffer register (SSPBUF)
- MSSP Address register (SSPADD)
- MSSP Shift register (SSPSR)
  (Not directly accessible)

SSPCON1 and SSPSTAT are the control and STATUS registers in SPI mode operation. The SSPCON1 register is readable and writable. The lower six bits of the SSPSTAT are read-only. The upper two bits of the SSPSTAT are read/write.

In one SPI master mode, SSPADD can be loaded with a value used in the Baud Rate Generator. More information on the Baud Rate Generator is available in **Section 28.7 "Baud Rate Generator"**.

SSPSR is the shift register used for shifting data in and out. SSPBUF provides indirect access to the SSPSR register. SSPBUF is the buffer register to which data bytes are written, and from which data bytes are read.

In receive operations, SSPSR and SSPBUF together create a buffered receiver. When SSPSR receives a complete byte, it is transferred to SSPBUF and the SSPIF interrupt is set.

During transmission, the SSPBUF is not buffered. A write to SSPBUF will write to both SSPBUF and SSPSR.

chanhvinh.com



### 28.2.2 SPI MODE OPERATION

When initializing the SPI, several options need to be specified. This is done by programming the appropriate control bits (SSPCON1<5:0> and SSPSTAT<7:6>). These control bits allow the following to be specified:

- Master mode (SCK is the clock output)
- Slave mode (SCK is the clock input)
- Clock Polarity (Idle state of SCK)
- Data Input Sample Phase (middle or end of data output time)
- Clock Edge (output data on rising/falling edge of SCK)
- Clock Rate (Master mode only)
- Slave Select mode (Slave mode only)

To enable the serial port, SSP Enable bit, SSPEN of the SSPCON1 register, must be set. To reset or reconfigure SPI mode, clear the SSPEN bit, re-initialize the SSPCONx registers and then set the SSPEN bit. This configures the SDI, SDO, SCK and $\overline{SS}$ pins as serial port pins. For the pins to behave as the serial port function, some must have their data direction bits (in the TRIS register) appropriately programmed as follows:

- SDI must have corresponding TRIS bit set
- SDO must have corresponding TRIS bit cleared
- SCK (Master mode) must have corresponding TRIS bit cleared
- SCK (Slave mode) must have corresponding TRIS bit set
- $\overline{SS}$ must have corresponding TRIS bit set

Any serial port function that is not desired may be overridden by programming the corresponding data direction (TRIS) register to the opposite value.

The MSSP consists of a transmit/receive shift register (SSPSR) and a buffer register (SSPBUF). The SSPSR shifts the data in and out of the device, MSb first. The SSPBUF holds the data that was written to the SSPSR until the received data is ready. Once the eight bits of data have been received, that byte is moved to the SSPBUF register. Then, the Buffer Full Detect bit, BF of the SSPSTAT register, and the interrupt flag bit, SSPIF, are set. This double-buffering of the received data (SSPBUF) allows the next byte to start reception before reading the data that was just received. Any write to the SSPBUF register during transmission/reception of data will be ignored and the write collision detect bit WCOL of the SSPCON1 register, will be set. User software must clear the WCOL bit to allow the following write(s) to the SSPBUF register to complete successfully.

When the application software is expecting to receive valid data, the SSPBUF should be read before the next byte of data to transfer is written to the SSPBUF. The Buffer Full bit, BF of the SSPSTAT register, indicates when SSPBUF has been loaded with the received data (transmission is complete). When the SSPBUF is read, the BF bit is cleared. This data may be irrelevant if the SPI is only a transmitter. Generally, the MSSP interrupt is used to determine when the transmission/reception has completed. If the interrupt method is not going to be used, then software polling can be done to ensure that a write collision does not occur.

The SSPSR is not directly readable or writable and can only be accessed by addressing the SSPBUF register. Additionally, the SSPSTAT register indicates the various Status conditions.

 © 2013 Microchip Technology Inc.

chanhvinh.com



**FIGURE 28-5: SPI MASTER/SLAVE CONNECTION**

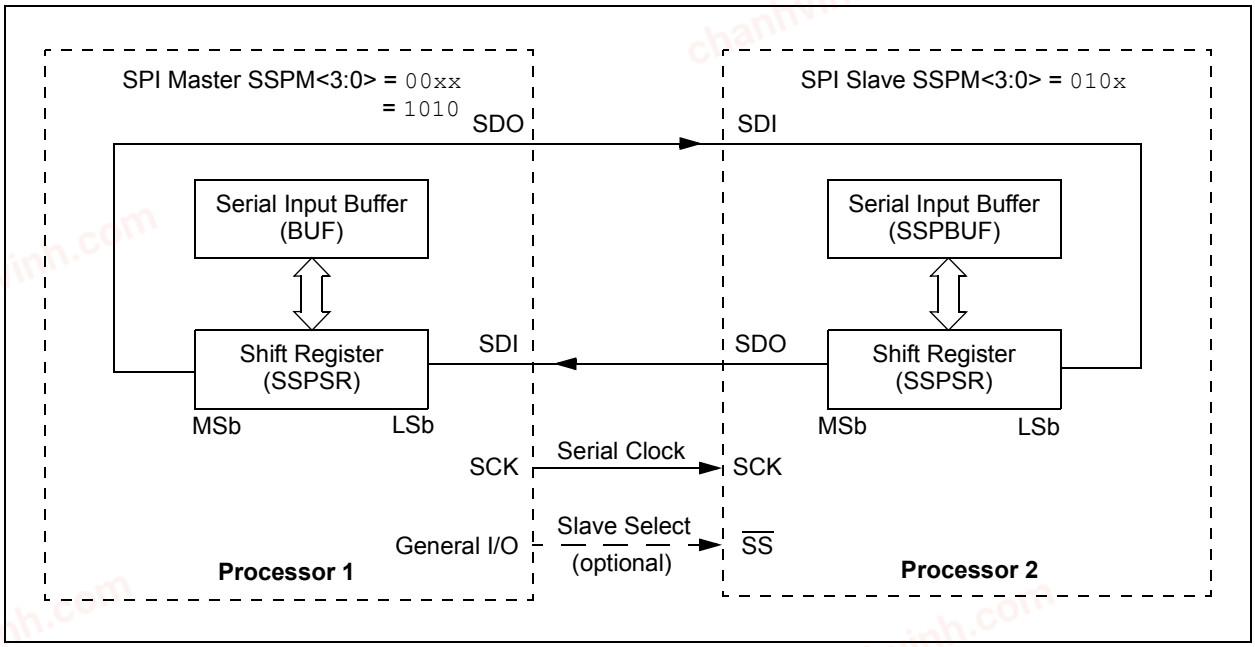

chanhvinh.com



### 28.2.3 SPI MASTER MODE

The master can initiate the data transfer at any time because it controls the SCK line. The master determines when the slave (Processor 2, Figure 28-5) is to broadcast data by the software protocol.

In Master mode, the data is transmitted/received as soon as the SSPBUF register is written to. If the SPI is only going to receive, the SDO output could be disabled (programmed as an input). The SSPSR register will continue to shift in the signal present on the SDI pin at the programmed clock rate. As each byte is received, it will be loaded into the SSPBUF register as if a normal received byte (interrupts and Status bits appropriately set).

The clock polarity is selected by appropriately programming the CKP bit of the SSPCON1 register and the CKE bit of the SSPSTAT register. This then, would give waveforms for SPI communication as shown in Figure 28-6, Figure 28-8, Figure 28-9 and Figure 28-10, where the MSB is transmitted first. In Master mode, the SPI clock rate (bit rate) is user programmable to be one of the following:

- FOSC/4 (or TCY)
- FOSC/16 (or 4 * TCY)
- FOSC/64 (or 16 * TCY)
- Timer2 output/2
- FOSC/(4 * (SSPADD + 1))

Figure 28-6 shows the waveforms for Master mode.

When the CKE bit is set, the SDO data is valid before there is a clock edge on SCK. The change of the input sample is shown based on the state of the SMP bit. The time when the SSPBUF is loaded with the received data is shown.

| | |
|---|---|
| **Note:** | In Master mode the clock signal output to the SCK pin is also the clock signal input to the peripheral. The pin selected for output with the RxyPPS register must also be selected as the peripheral input with the SSPCLKPPS register. |

 © 2013 Microchip Technology Inc.

chanhvinh.com



**FIGURE 28-6: SPI MODE WAVEFORM (MASTER MODE)**

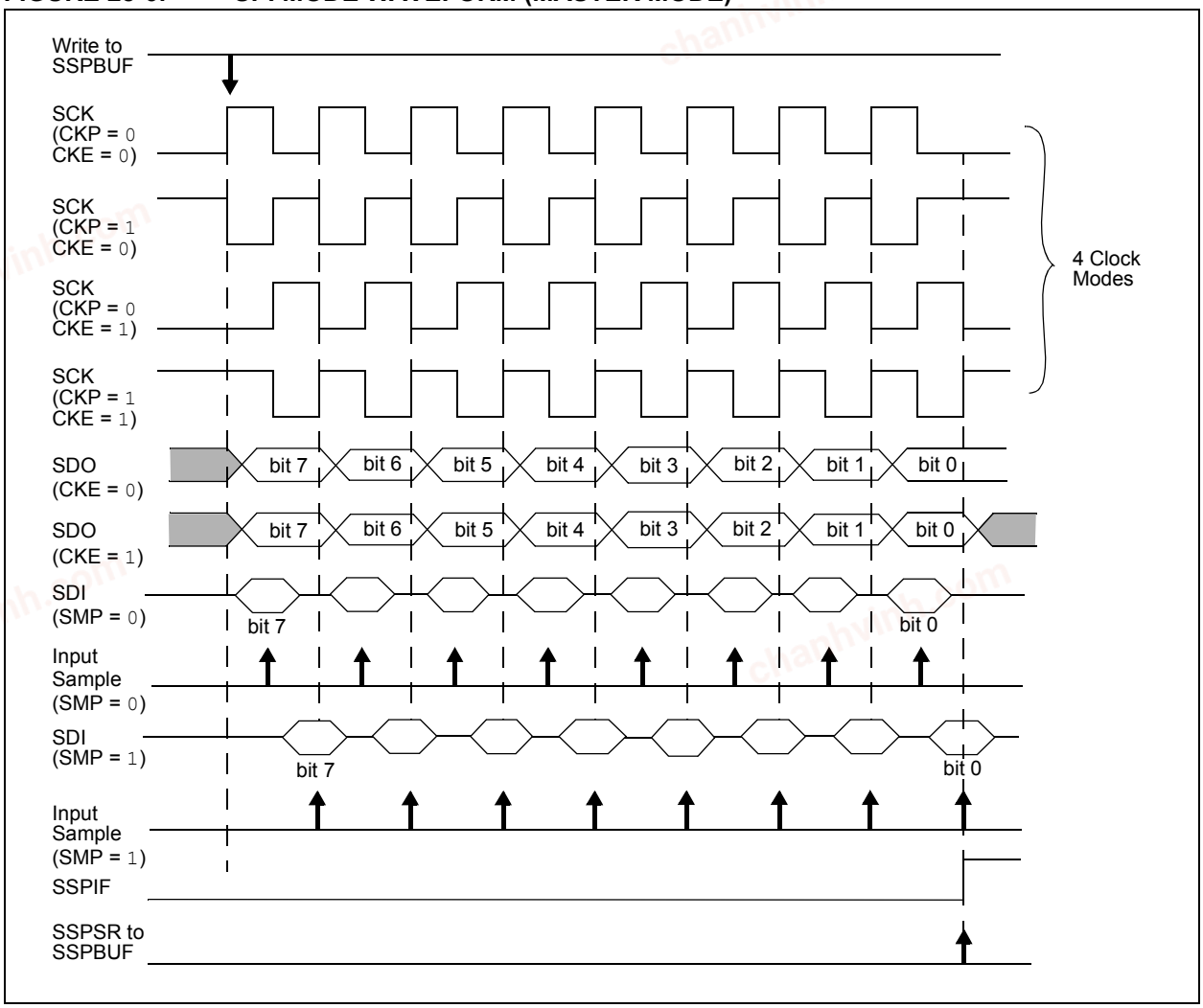

chanhvinh.com



### 28.2.4 SPI SLAVE MODE

In Slave mode, the data is transmitted and received as external clock pulses appear on SCK. When the last bit is latched, the SSPIF interrupt flag bit is set.

Before enabling the module in SPI Slave mode, the clock line must match the proper Idle state. The clock line can be observed by reading the SCK pin. The Idle state is determined by the CKP bit of the SSPCON1 register.

While in Slave mode, the external clock is supplied by the external clock source on the SCK pin. This external clock must meet the minimum high and low times as specified in the electrical specifications.

While in Sleep mode, the slave can transmit/receive data. The shift register is clocked from the SCK pin input and when a byte is received, the device will generate an interrupt. If enabled, the device will wake-up from Sleep.

#### 28.2.4.1 Daisy-Chain Configuration

The SPI bus can sometimes be connected in a daisy-chain configuration. The first slave output is connected to the second slave input, the second slave output is connected to the third slave input, and so on. The final slave output is connected to the master input. Each slave sends out, during a second group of clock pulses, an exact copy of what was received during the first group of clock pulses. The whole chain acts as one large communication shift register. The daisy-chain feature only requires a single Slave Select line from the master device.

Figure 28-7 shows the block diagram of a typical daisy-chain connection when operating in SPI mode.

In a daisy-chain configuration, only the most recent byte on the bus is required by the slave. Setting the BOEN bit of the SSPCON3 register will enable writes to the SSPBUF register, even if the previous byte has not been read. This allows the software to ignore data that may not apply to it.

### 28.2.5 SLAVE SELECT SYNCHRONIZATION

The Slave Select can also be used to synchronize communication. The Slave Select line is held high until the master device is ready to communicate. When the Slave Select line is pulled low, the slave knows that a new transmission is starting.

If the slave fails to receive the communication properly, it will be reset at the end of the transmission, when the Slave Select line returns to a high state. The slave is then ready to receive a new transmission when the Slave Select line is pulled low again. If the Slave Select line is not used, there is a risk that the slave will eventually become out of sync with the master. If the slave misses a bit, it will always be one bit off in future transmissions. Use of the Slave Select line allows the slave and master to align themselves at the beginning of each transmission.

The $\overline{SS}$ pin allows a Synchronous Slave mode. The SPI must be in Slave mode with $\overline{SS}$ pin control enabled (SSPCON1<3:0> = 0100).

When the $\overline{SS}$ pin is low, transmission and reception are enabled and the SDO pin is driven.

When the $\overline{SS}$ pin goes high, the SDO pin is no longer driven, even if in the middle of a transmitted byte and becomes a floating output. External pull-up/pull-down resistors may be desirable depending on the application.

| | |
|---|---|
| **Note 1:** | When the SPI is in Slave mode with $\overline{SS}$ pin control enabled (SSPCON1<3:0> = 0100), the SPI module will reset if the $\overline{SS}$ pin is set to VDD. |
| **2:** | When the SPI is used in Slave mode with CKE set; the user must enable $\overline{SS}$ pin control. |
| **3:** | While operated in SPI Slave mode the SMP bit of the SSPSTAT register must remain clear. |

When the SPI module resets, the bit counter is forced to '0'. This can be done by either forcing the $\overline{SS}$ pin to a high level or clearing the SSPEN bit.

 © 2013 Microchip Technology Inc.

chanhvinh.com



**FIGURE 28-7: SPI DAISY-CHAIN CONNECTION**

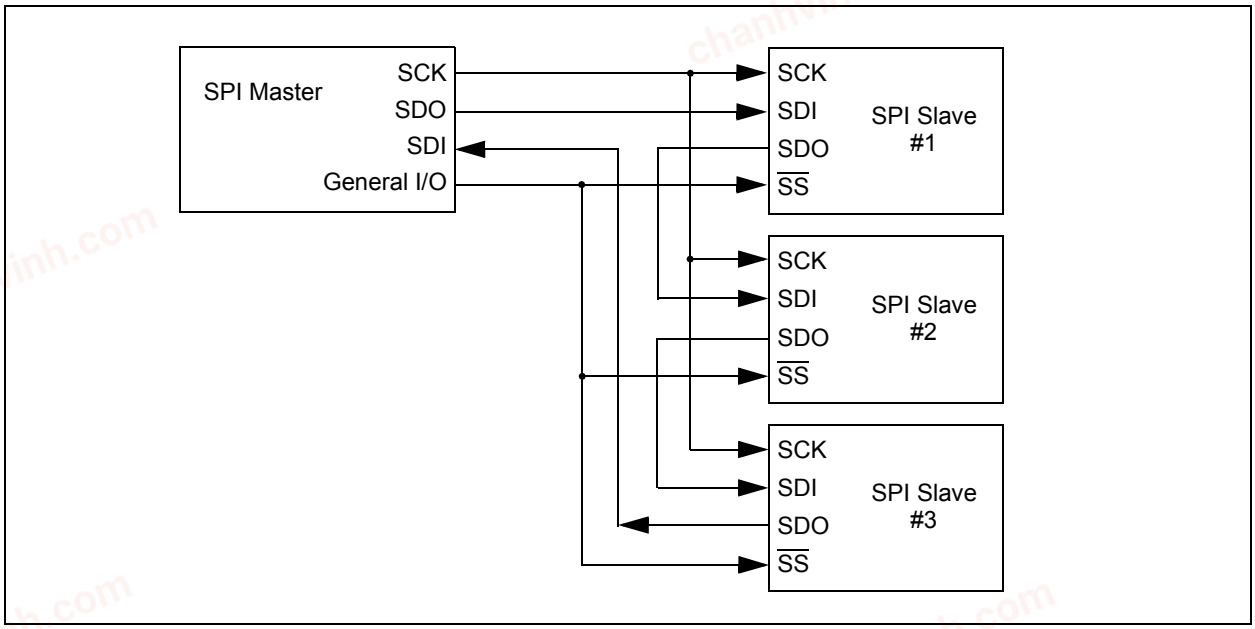


**FIGURE 28-8: SLAVE SELECT SYNCHRONOUS WAVEFORM**

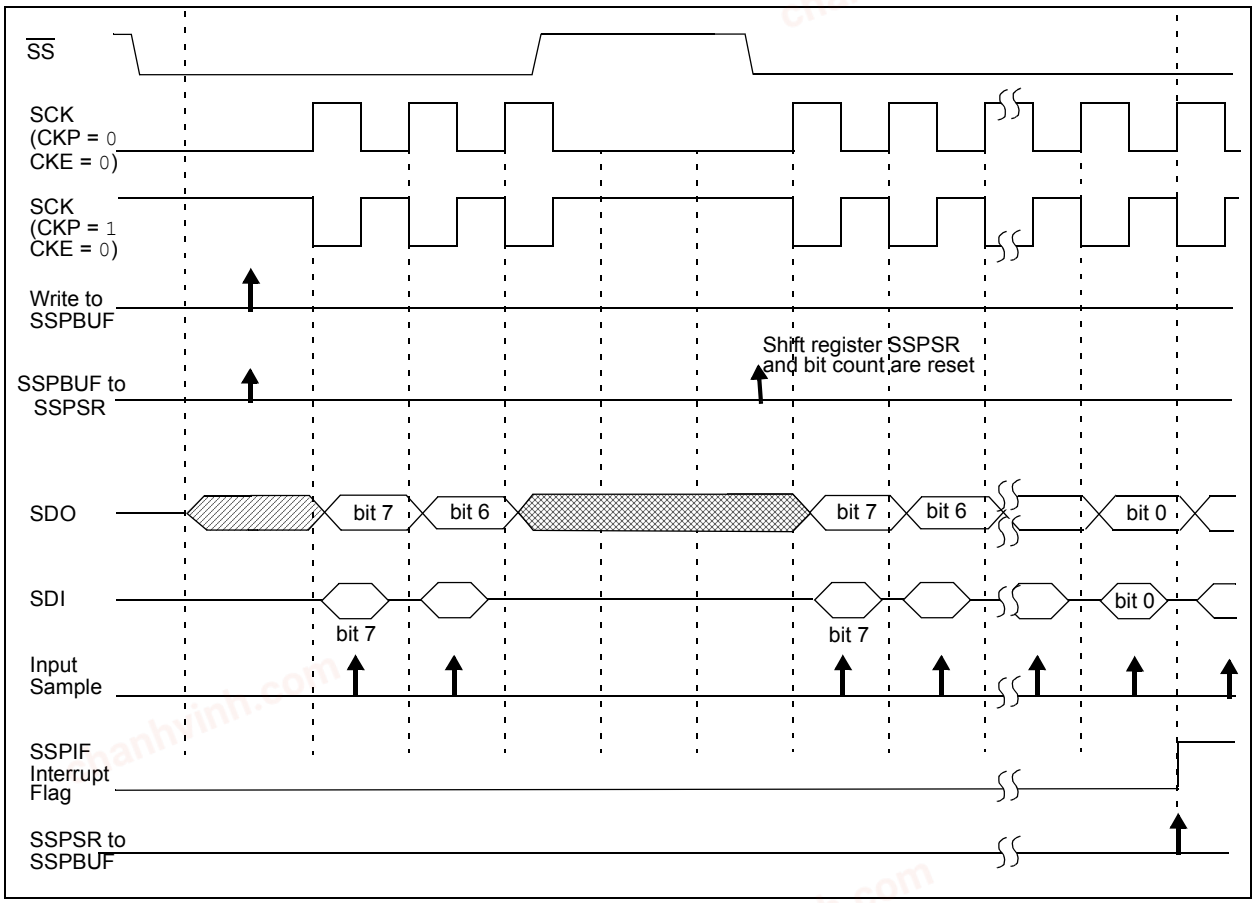

chanhvinh.com



**FIGURE 28-9: SPI MODE WAVEFORM (SLAVE MODE WITH CKE = 0)**

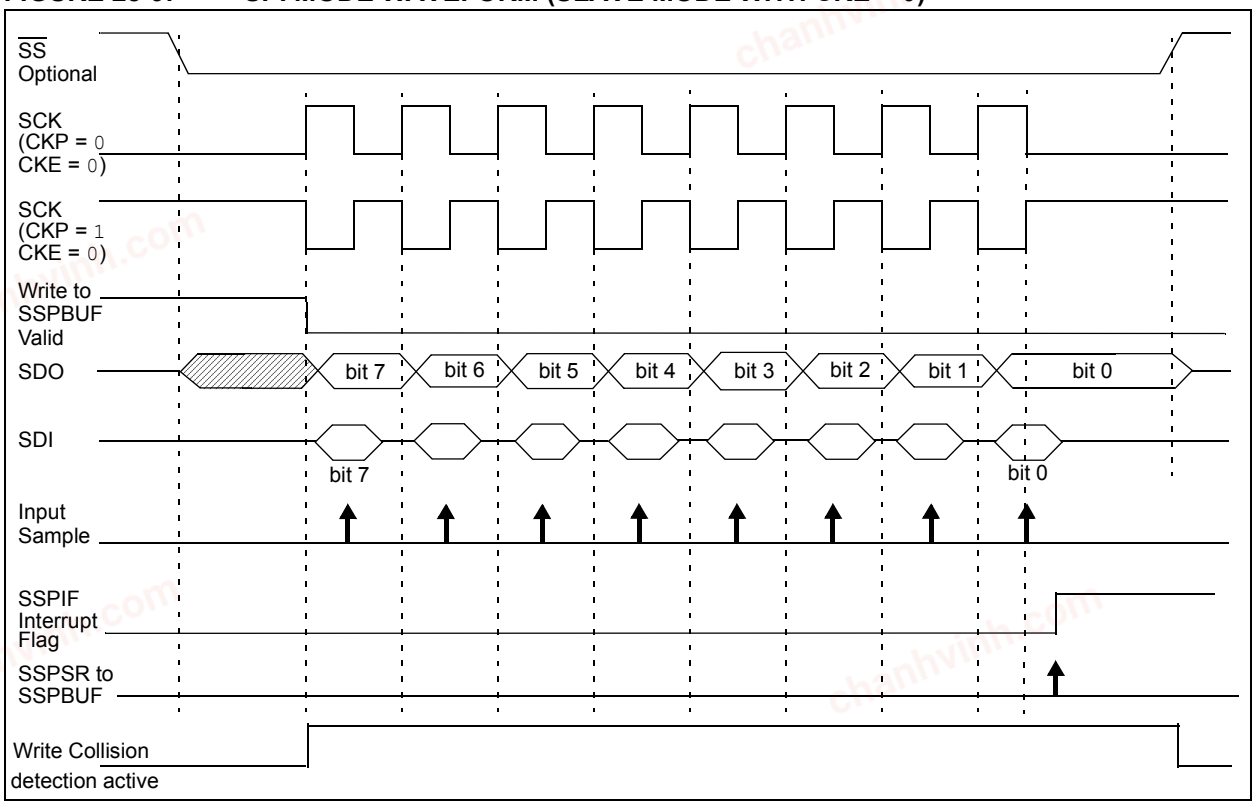


**FIGURE 28-10: SPI MODE WAVEFORM (SLAVE MODE WITH CKE = 1)**

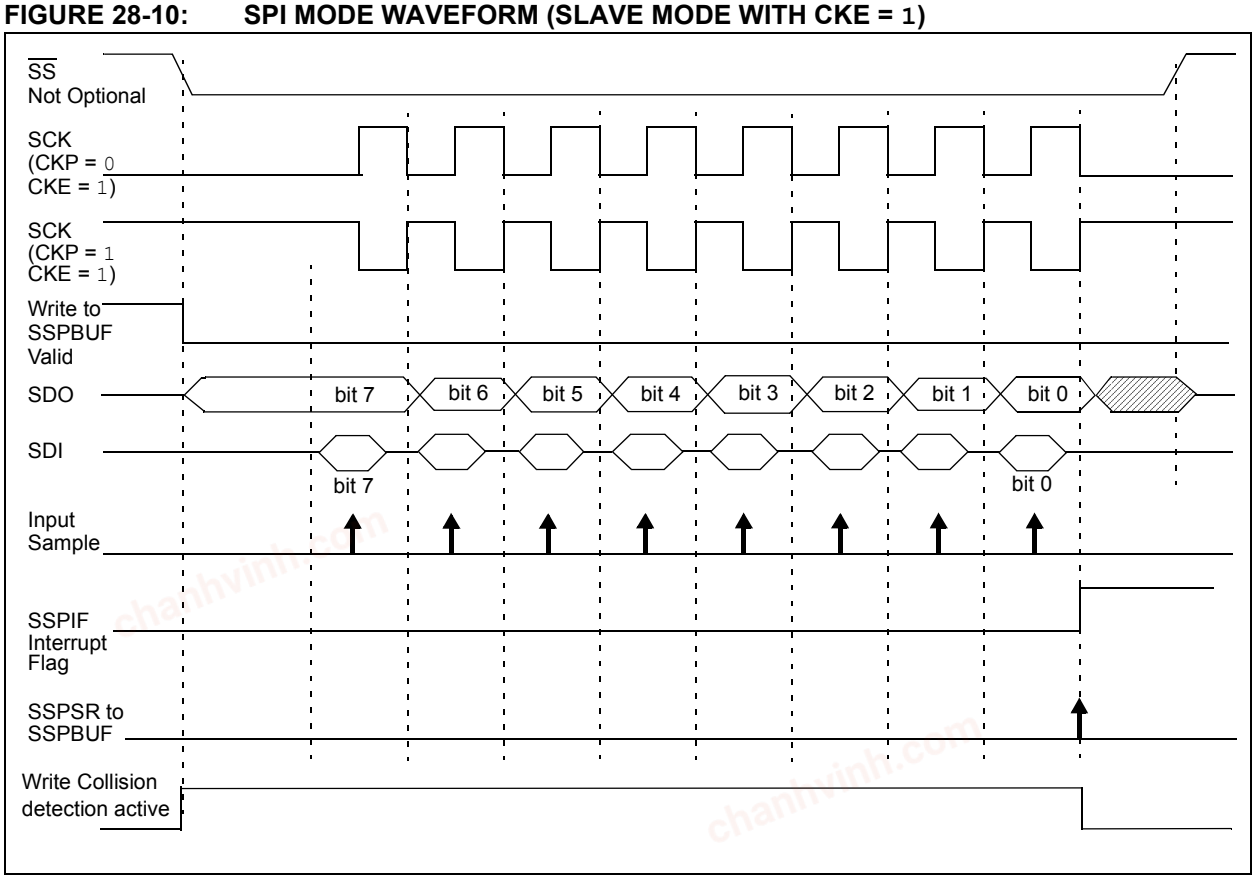


 © 2013 Microchip Technology Inc.

chanhvinh.com



### 28.2.6 SPI OPERATION IN SLEEP MODE

In SPI Master mode, module clocks may be operating at a different speed than when in Full-Power mode; in the case of the Sleep mode, all clocks are halted.

Special care must be taken by the user when the MSSP clock is much faster than the system clock.

In Slave mode, when MSSP interrupts are enabled, after the master completes sending data, an MSSP interrupt will wake the controller from Sleep.

If an exit from Sleep mode is not desired, MSSP interrupts should be disabled.

In SPI Master mode, when the Sleep mode is selected, all module clocks are halted and the transmission/reception will remain in that state until the device wakes. After the device returns to Run mode, the module will resume transmitting and receiving data.

In SPI Slave mode, the SPI Transmit/Receive Shift register operates asynchronously to the device. This allows the device to be placed in Sleep mode and data to be shifted into the SPI Transmit/Receive Shift register. When all eight bits have been received, the MSSP interrupt flag bit will be set and if enabled, will wake the device.

**TABLE 28-1: SUMMARY OF REGISTERS ASSOCIATED WITH SPI OPERATION**

| Name | Bit 7 | Bit 6 | Bit 5 | Bit 4 | Bit 3 | Bit 2 | Bit 1 | Bit 0 | Register on Page |
|---|---|---|---|---|---|---|---|---|---|
| ANSELA | — | — | — | ANSA4 | — | ANSA2 | ANSA1 | ANSA0 | 125 |
| ANSELC | ANSC7(2) | ANSC6(2) | ANSC5(3) | ANSC4(3) | ANSC3 | ANSC2 | ANSC1 | ANSC0 | 136 |
| INTCON | GIE | PEIE | TMR0IE | INTE | IOCIE | TMR0IF | INTF | IOCIF | 86 |
| PIE1 | TMR1GIE | ADIE | RCIE | TXIE | SSP1IE | CCP1IE | TMR2IE | TMR1IE | 87 |
| PIR1 | TMR1GIF | ADIF | RCIF | TXIF | SSP1IF | CCP1IF | TMR2IF | TMR1IF | 90 |
| RxyPPS | — | — | — | RxyPPS<4:0> | | | | | 143 |
| SSPCLKPPS | — | — | — | SSPCLKPPS<4:0> | | | | | 141, 142 |
| SSPDATPPS | — | — | — | SSPDATPPS<4:0> | | | | | 141, 142 |
| SSPSSPPS | — | — | — | SSPSSPPS<4:0> | | | | | 141, 142 |
| SSP1BUF | Synchronous Serial Port Receive Buffer/Transmit Register | | | | | | | | 285* |
| SSP1CON1 | WCOL | SSPOV | SSPEN | CKP | SSPM<3:0> | | | | 332 |
| SSP1CON3 | ACKTIM | PCIE | SCIE | BOEN | SDAHT | SBCDE | AHEN | DHEN | 330 |
| SSP1STAT | SMP | CKE | D/$\overline{A}$ | P | S | R/$\overline{W}$ | UA | BF | 330 |
| TRISA | — | — | TRISA5 | TRISA4 | —(1) | TRISA2 | TRISA1 | TRISA0 | 124 |
| TRISB(2) | TRISB7 | TRISB6 | TRISB5 | TRISB4 | — | — | — | — | 130 |
| TRISC | TRISC7(2) | TRISC6(2) | TRISC5 | TRISC4 | TRISC3 | TRISC2 | TRISC1 | TRISA0 | 135 |

**Legend:** — = Unimplemented location, read as '0'. Shaded cells are not used by the MSSP in SPI mode.

* Page provides register information.

**Note 1:** Unimplemented, read as '1'.

**2:** PIC16(L)F1708 only.

**3:** PIC16(L)F1704 only.

chanhvinh.com



## 28.3 I²C MODE OVERVIEW

The Inter-Integrated Circuit (I²C) bus is a multi-master serial data communication bus. Devices communicate in a master/slave environment where the master devices initiate the communication. A slave device is controlled through addressing.

The I²C bus specifies two signal connections:

- Serial Clock (SCL)
- Serial Data (SDA)

Figure 28-11 shows the block diagram of the MSSP module when operating in I²C mode.

Both the SCL and SDA connections are bidirectional open-drain lines, each requiring pull-up resistors for the supply voltage. Pulling the line to ground is considered a logical zero and letting the line float is considered a logical one.

Figure 28-11 shows a typical connection between two processors configured as master and slave devices.

The I²C bus can operate with one or more master devices and one or more slave devices.

There are four potential modes of operation for a given device:

- Master Transmit mode
  (master is transmitting data to a slave)
- Master Receive mode
  (master is receiving data from a slave)
- Slave Transmit mode
  (slave is transmitting data to a master)
- Slave Receive mode
  (slave is receiving data from the master)

To begin communication, a master device starts out in Master Transmit mode. The master device sends out a Start bit followed by the address byte of the slave it intends to communicate with. This is followed by a single Read/Write bit, which determines whether the master intends to transmit to or receive data from the slave device.

If the requested slave exists on the bus, it will respond with an Acknowledge bit, otherwise known as an $\overline{ACK}$. The master then continues in either Transmit mode or Receive mode and the slave continues in the complement, either in Receive mode or Transmit mode, respectively.

A Start bit is indicated by a high-to-low transition of the SDA line while the SCL line is held high. Address and data bytes are sent out, Most Significant bit (MSb) first. The Read/Write bit is sent out as a logical one when the master intends to read data from the slave, and is sent out as a logical zero when it intends to write data to the slave.

**FIGURE 28-11: I²C MASTER/ SLAVE CONNECTION**

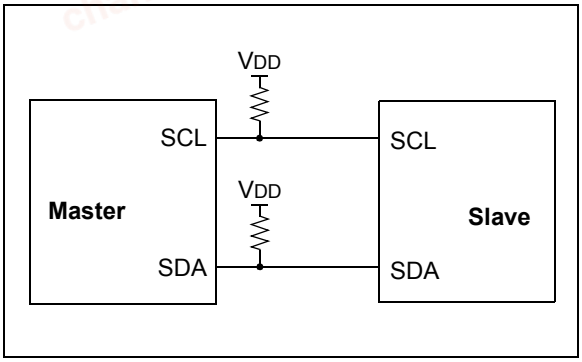


The Acknowledge bit ($\overline{ACK}$) is an active-low signal, which holds the SDA line low to indicate to the transmitter that the slave device has received the transmitted data and is ready to receive more.

The transition of a data bit is always performed while the SCL line is held low. Transitions that occur while the SCL line is held high are used to indicate Start and Stop bits.

If the master intends to write to the slave, then it repeatedly sends out a byte of data, with the slave responding after each byte with an $\overline{ACK}$ bit. In this example, the master device is in Master Transmit mode and the slave is in Slave Receive mode.

If the master intends to read from the slave, then it repeatedly receives a byte of data from the slave, and responds after each byte with an $\overline{ACK}$ bit. In this example, the master device is in Master Receive mode and the slave is Slave Transmit mode.

On the last byte of data communicated, the master device may end the transmission by sending a Stop bit. If the master device is in Receive mode, it sends the Stop bit in place of the last $\overline{ACK}$ bit. A Stop bit is indicated by a low-to-high transition of the SDA line while the SCL line is held high.

In some cases, the master may want to maintain control of the bus and re-initiate another transmission. If so, the master device may send another Start bit in place of the Stop bit or last $\overline{ACK}$ bit when it is in receive mode.

The I²C bus specifies three message protocols;

- Single message where a master writes data to a slave.
- Single message where a master reads data from a slave.
- Combined message where a master initiates a minimum of two writes, or two reads, or a combination of writes and reads, to one or more slaves.

 © 2013 Microchip Technology Inc.

chanhvinh.com



When one device is transmitting a logical one, or letting the line float, and a second device is transmitting a logical zero, or holding the line low, the first device can detect that the line is not a logical one. This detection, when used on the SCL line, is called clock stretching. Clock stretching gives slave devices a mechanism to control the flow of data. When this detection is used on the SDA line, it is called arbitration. Arbitration ensures that there is only one master device communicating at any single time.

### 28.3.1 CLOCK STRETCHING

When a slave device has not completed processing data, it can delay the transfer of more data through the process of clock stretching. An addressed slave device may hold the SCL clock line low after receiving or sending a bit, indicating that it is not yet ready to continue. The master that is communicating with the slave will attempt to raise the SCL line in order to transfer the next bit, but will detect that the clock line has not yet been released. Because the SCL connection is open-drain, the slave has the ability to hold that line low until it is ready to continue communicating.

Clock stretching allows receivers that cannot keep up with a transmitter to control the flow of incoming data.

### 28.3.2 ARBITRATION

Each master device must monitor the bus for Start and Stop bits. If the device detects that the bus is busy, it cannot begin a new message until the bus returns to an Idle state.

However, two master devices may try to initiate a transmission on or about the same time. When this occurs, the process of arbitration begins. Each transmitter checks the level of the SDA data line and compares it to the level that it expects to find. The first transmitter to observe that the two levels do not match, loses arbitration, and must stop transmitting on the SDA line.

For example, if one transmitter holds the SDA line to a logical one (lets it float) and a second transmitter holds it to a logical zero (pulls it low), the result is that the SDA line will be low. The first transmitter then observes that the level of the line is different than expected and concludes that another transmitter is communicating.

The first transmitter to notice this difference is the one that loses arbitration and must stop driving the SDA line. If this transmitter is also a master device, it also must stop driving the SCL line. It then can monitor the lines for a Stop condition before trying to reissue its transmission. In the meantime, the other device that has not noticed any difference between the expected and actual levels on the SDA line continues with its original transmission. It can do so without any complications, because so far, the transmission appears exactly as expected with no other transmitter disturbing the message.

Slave Transmit mode can also be arbitrated, when a master addresses multiple slaves, but this is less common.

If two master devices are sending a message to two different slave devices at the address stage, the master sending the lower slave address always wins arbitration. When two master devices send messages to the same slave address, and addresses can sometimes refer to multiple slaves, the arbitration process must continue into the data stage.

Arbitration usually occurs very rarely, but it is a necessary process for proper multi-master support.

chanhvinh.com

chanhvinh.com



## 28.4 I²C MODE OPERATION

All MSSP I²C communication is byte oriented and shifted out MSb first. Six SFR registers and two interrupt flags interface the module with the PIC® microcontroller and user software. Two pins, SDA and SCL, are exercised by the module to communicate with other external I²C devices.

### 28.4.1 BYTE FORMAT

All communication in I²C is done in 9-bit segments. A byte is sent from a master to a slave or vice-versa, followed by an Acknowledge bit sent back. After the eighth falling edge of the SCL line, the device outputting data on the SDA changes that pin to an input and reads in an acknowledge value on the next clock pulse.

The clock signal, SCL, is provided by the master. Data is valid to change while the SCL signal is low, and sampled on the rising edge of the clock. Changes on the SDA line while the SCL line is high define special conditions on the bus, explained below.

### 28.4.2 DEFINITION OF I²C TERMINOLOGY

There is language and terminology in the description of I²C communication that have definitions specific to I²C. That word usage is defined below and may be used in the rest of this document without explanation. This table was adapted from the Philips I²C specification.

### 28.4.3 SDA AND SCL PINS

Selection of any I²C mode with the SSPEN bit set, forces the SCL and SDA pins to be open-drain. These pins should be set by the user to inputs by setting the appropriate TRIS bits.

**Note 1:** Data is tied to output zero when an I²C mode is enabled.

**2:** Any device pin can be selected for SDA and SCL functions with the PPS peripheral. These functions are bidirectional. The SDA input is selected with the SSPDATPPS registers. The SCL input is selected with the SSPCLKPPS registers. Outputs are selected with the RxyPPS registers. It is the user's responsibility to make the selections so that both the input and the output for each function is on the same pin.

### 28.4.4 SDA HOLD TIME

The hold time of the SDA pin is selected by the SDAHT bit of the SSPCON3 register. Hold time is the time SDA is held valid after the falling edge of SCL. Setting the SDAHT bit selects a longer 300 ns minimum hold time and may help on buses with large capacitance.

**TABLE 28-2: I²C BUS TERMS**

| TERM | Description |
|---|---|
| Transmitter | The device which shifts data out onto the bus. |
| Receiver | The device which shifts data in from the bus. |
| Master | The device that initiates a transfer, generates clock signals and terminates a transfer. |
| Slave | The device addressed by the master. |
| Multi-master | A bus with more than one device that can initiate data transfers. |
| Arbitration | Procedure to ensure that only one master at a time controls the bus. Winning arbitration ensures that the message is not corrupted. |
| Synchronization | Procedure to synchronize the clocks of two or more devices on the bus. |
| Idle | No master is controlling the bus, and both SDA and SCL lines are high. |
| Active | Any time one or more master devices are controlling the bus. |
| Addressed Slave | Slave device that has received a matching address and is actively being clocked by a master. |
| Matching Address | Address byte that is clocked into a slave that matches the value stored in SSPADD. |
| Write Request | Slave receives a matching address with R/$\overline{W}$ bit clear, and is ready to clock in data. |
| Read Request | Master sends an address byte with the R/$\overline{W}$ bit set, indicating that it wishes to clock data out of the Slave. This data is the next and all following bytes until a Restart or Stop. |
| Clock Stretching | When a device on the bus hold SCL low to stall communication. |
| Bus Collision | Any time the SDA line is sampled low by the module while it is outputting and expected high state. |

 © 2013 Microchip Technology Inc.

chanhvinh.com



### 28.4.5 START CONDITION

The I²C specification defines a Start condition as a transition of SDA from a high to a low state while SCL line is high. A Start condition is always generated by the master and signifies the transition of the bus from an Idle to an Active state. Figure 28-12 shows wave forms for Start and Stop conditions.

A bus collision can occur on a Start condition if the module samples the SDA line low before asserting it low. This does not conform to the I²C Specification that states no bus collision can occur on a Start.

### 28.4.6 STOP CONDITION

A Stop condition is a transition of the SDA line from low-to-high state while the SCL line is high.

**Note:** At least one SCL low time must appear before a Stop is valid, therefore, if the SDA line goes low then high again while the SCL line stays high, only the Start condition is detected.

### 28.4.7 RESTART CONDITION

A Restart is valid any time that a Stop would be valid. A master can issue a Restart if it wishes to hold the bus after terminating the current transfer. A Restart has the same effect on the slave that a Start would, resetting all slave logic and preparing it to clock in an address. The master may want to address the same or another slave. Figure 28-13 shows the wave form for a Restart condition.

In 10-bit Addressing Slave mode a Restart is required for the master to clock data out of the addressed slave. Once a slave has been fully addressed, matching both high and low address bytes, the master can issue a Restart and the high address byte with the R/$\overline{W}$ bit set. The slave logic will then hold the clock and prepare to clock out data.

After a full match with R/$\overline{W}$ clear in 10-bit mode, a prior match flag is set and maintained until a Stop condition, a high address with R/$\overline{W}$ clear, or high address match fails.

### 28.4.8 START/STOP CONDITION INTERRUPT MASKING

The SCIE and PCIE bits of the SSPCON3 register can enable the generation of an interrupt in Slave modes that do not typically support this function. Slave modes where interrupt on Start and Stop detect are already enabled, these bits will have no effect.

**FIGURE 28-12: I²C START AND STOP CONDITIONS**

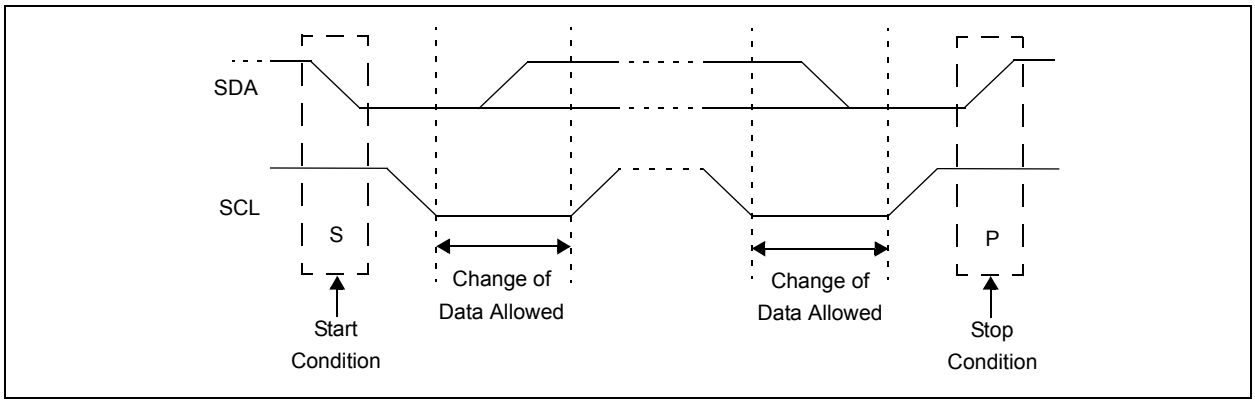


**FIGURE 28-13: I²C RESTART CONDITION**

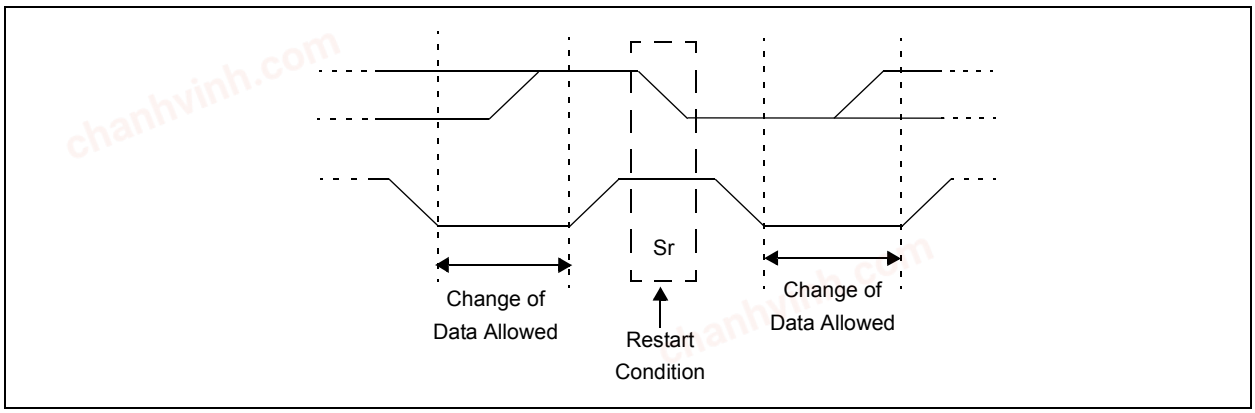

chanhvinh.com



#### 28.4.9 ACKNOWLEDGE SEQUENCE

The 9th SCL pulse for any transferred byte in $I^2C$ is dedicated as an Acknowledge. It allows receiving devices to respond back to the transmitter by pulling the SDA line low. The transmitter must release control of the line during this time to shift in the response. The Acknowledge ($\overline{ACK}$) is an active-low signal, pulling the SDA line low indicates to the transmitter that the device has received the transmitted data and is ready to receive more.

The result of an $\overline{ACK}$ is placed in the ACKSTAT bit of the SSPCON2 register.

Slave software, when the AHEN and DHEN bits are set, allow the user to set the $\overline{ACK}$ value sent back to the transmitter. The ACKDT bit of the SSPCON2 register is set/cleared to determine the response.

Slave hardware will generate an $\overline{ACK}$ response if the AHEN and DHEN bits of the SSPCON3 register are clear.

There are certain conditions where an $\overline{ACK}$ will not be sent by the slave. If the BF bit of the SSPSTAT register or the SSPOV bit of the SSPCON1 register are set when a byte is received.

When the module is addressed, after the eighth falling edge of SCL on the bus, the ACKTIM bit of the SSPCON3 register is set. The ACKTIM bit indicates the acknowledge time of the active bus. The ACKTIM Status bit is only active when the AHEN bit or DHEN bit is enabled.

## 28.5 $I^2C$ SLAVE MODE OPERATION

The MSSP Slave mode operates in one of four modes selected by the SSPM bits of SSPCON1 register. The modes can be divided into 7-bit and 10-bit Addressing mode. 10-bit Addressing modes operate the same as 7-bit with some additional overhead for handling the larger addresses.

Modes with Start and Stop bit interrupts operate the same as the other modes with SSPIF additionally getting set upon detection of a Start, Restart, or Stop condition.

#### 28.5.1 SLAVE MODE ADDRESSES

The SSPADD register (Register 28-6) contains the Slave mode address. The first byte received after a Start or Restart condition is compared against the value stored in this register. If the byte matches, the value is loaded into the SSPBUF register and an interrupt is generated. If the value does not match, the module goes idle and no indication is given to the software that anything happened.

The SSP Mask register (Register 28-5) affects the address matching process. See **Section 28.5.9 "SSP Mask Register"** for more information.

##### 28.5.1.1 $I^2C$ Slave 7-bit Addressing Mode

In 7-bit Addressing mode, the LSb of the received data byte is ignored when determining if there is an address match.

##### 28.5.1.2 $I^2C$ Slave 10-bit Addressing Mode

In 10-bit Addressing mode, the first received byte is compared to the binary value of '1 1 1 1 0 A9 A8 0'. A9 and A8 are the two MSb's of the 10-bit address and stored in bits 2 and 1 of the SSPADD register.

After the acknowledge of the high byte the UA bit is set and SCL is held low until the user updates SSPADD with the low address. The low address byte is clocked in and all eight bits are compared to the low address value in SSPADD. Even if there is not an address match; SSPIF and UA are set, and SCL is held low until SSPADD is updated to receive a high byte again. When SSPADD is updated the UA bit is cleared. This ensures the module is ready to receive the high address byte on the next communication.

A high and low address match as a write request is required at the start of all 10-bit addressing communication. A transmission can be initiated by issuing a Restart once the slave is addressed, and clocking in the high address with the R/$\overline{W}$ bit set. The slave hardware will then acknowledge the read request and prepare to clock out data. This is only valid for a slave after it has received a complete high and low address byte match.

 © 2013 Microchip Technology Inc.

chanhvinh.com



### 28.5.2 SLAVE RECEPTION

When the R/$\overline{W}$ bit of a matching received address byte is clear, the R/$\overline{W}$ bit of the SSPSTAT register is cleared. The received address is loaded into the SSPBUF register and acknowledged.

When the overflow condition exists for a received address, then not Acknowledge is given. An overflow condition is defined as either bit BF of the SSPSTAT register is set, or bit SSPOV of the SSPCON1 register is set. The BOEN bit of the SSPCON3 register modifies this operation. For more information see Register 28-4.

An MSSP interrupt is generated for each transferred data byte. Flag bit, SSPIF, must be cleared by software.

When the SEN bit of the SSPCON2 register is set, SCL will be held low (clock stretch) following each received byte. The clock must be released by setting the CKP bit of the SSPCON1 register, except sometimes in 10-bit mode. See **Section 28.5.6.2 "10-bit Addressing Mode"** for more detail.

#### 28.5.2.1 7-bit Addressing Reception

This section describes a standard sequence of events for the MSSP module configured as an $I^2C$ slave in 7-bit Addressing mode. Figure 28-14 and Figure 28-15 is used as a visual reference for this description.

This is a step by step process of what typically must be done to accomplish $I^2C$ communication.

1. Start bit detected.
2. S bit of SSPSTAT is set; SSPIF is set if interrupt on Start detect is enabled.
3. Matching address with R/$\overline{W}$ bit clear is received.
4. The slave pulls SDA low sending an $\overline{ACK}$ to the master, and sets SSPIF bit.
5. Software clears the SSPIF bit.
6. Software reads received address from SSPBUF clearing the BF flag.
7. If SEN = 1; Slave software sets CKP bit to release the SCL line.
8. The master clocks out a data byte.
9. Slave drives SDA low sending an $\overline{ACK}$ to the master, and sets SSPIF bit.
10. Software clears SSPIF.
11. Software reads the received byte from SSPBUF clearing BF.
12. Steps 8-12 are repeated for all received bytes from the master.
13. Master sends Stop condition, setting P bit of SSPSTAT, and the bus goes idle.

#### 28.5.2.2 7-bit Reception with AHEN and DHEN

Slave device reception with AHEN and DHEN set operate the same as without these options with extra interrupts and clock stretching added after the eighth falling edge of SCL. These additional interrupts allow the slave software to decide whether it wants to $\overline{ACK}$ the receive address or data byte, rather than the hardware. This functionality adds support for PMBus™ that was not present on previous versions of this module.

This list describes the steps that need to be taken by slave software to use these options for $I^2C$ communication. Figure 28-16 displays a module using both address and data holding. Figure 28-17 includes the operation with the SEN bit of the SSPCON2 register set.

1. S bit of SSPSTAT is set; SSPIF is set if interrupt on Start detect is enabled.
2. Matching address with R/$\overline{W}$ bit clear is clocked in. SSPIF is set and CKP cleared after the eighth falling edge of SCL.
3. Slave clears the SSPIF.
4. Slave can look at the ACKTIM bit of the SSPCON3 register to determine if the SSPIF was after or before the $\overline{ACK}$.
5. Slave reads the address value from SSPBUF, clearing the BF flag.
6. Slave sets $\overline{ACK}$ value clocked out to the master by setting ACKDT.
7. Slave releases the clock by setting CKP.
8. SSPIF is set after an $\overline{ACK}$, not after a NACK.
9. If SEN = 1 the slave hardware will stretch the clock after the $\overline{ACK}$.
10. Slave clears SSPIF.

**Note:** SSPIF is still set after the 9th falling edge of SCL even if there is no clock stretching and BF has been cleared. Only if NACK is sent to master is SSPIF not set

11. SSPIF set and CKP cleared after eighth falling edge of SCL for a received data byte.
12. Slave looks at ACKTIM bit of SSPCON3 to determine the source of the interrupt.
13. Slave reads the received data from SSPBUF clearing BF.
14. Steps 7-14 are the same for each received data byte.
15. Communication is ended by either the slave sending an $\overline{ACK}$ = 1, or the master sending a Stop condition. If a Stop is sent and Interrupt on Stop Detect is disabled, the slave will only know by polling the P bit of the SSTSTAT register.

chanhvinh.com



**FIGURE 28-14: I²C SLAVE, 7-BIT ADDRESS, RECEPTION (SEN = 0, AHEN = 0, DHEN = 0)**

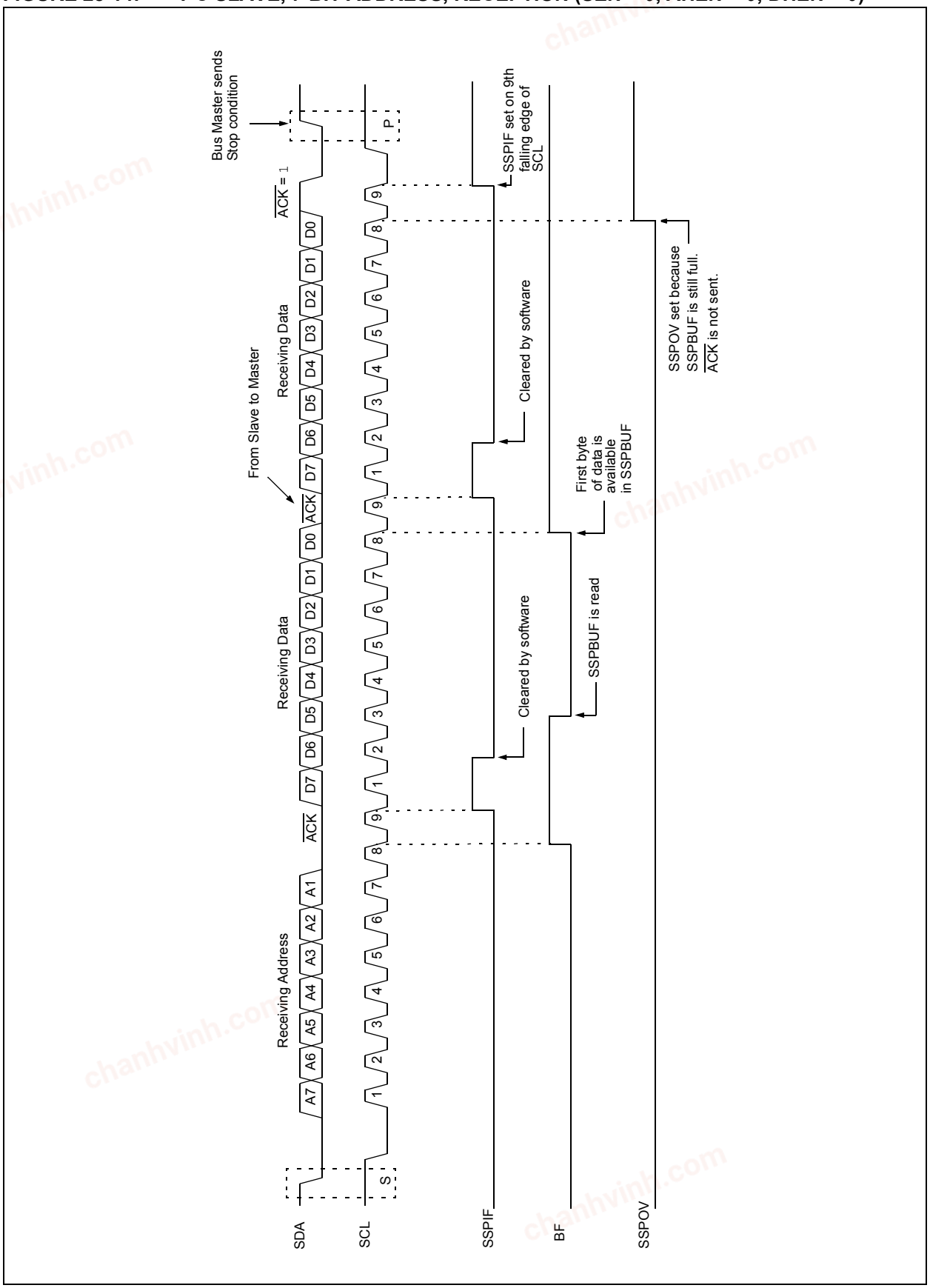


 © 2013 Microchip Technology Inc.

chanhvinh.com



**FIGURE 28-15: I²C SLAVE, 7-BIT ADDRESS, RECEPTION (SEN = 1, AHEN = 0, DHEN = 0)**

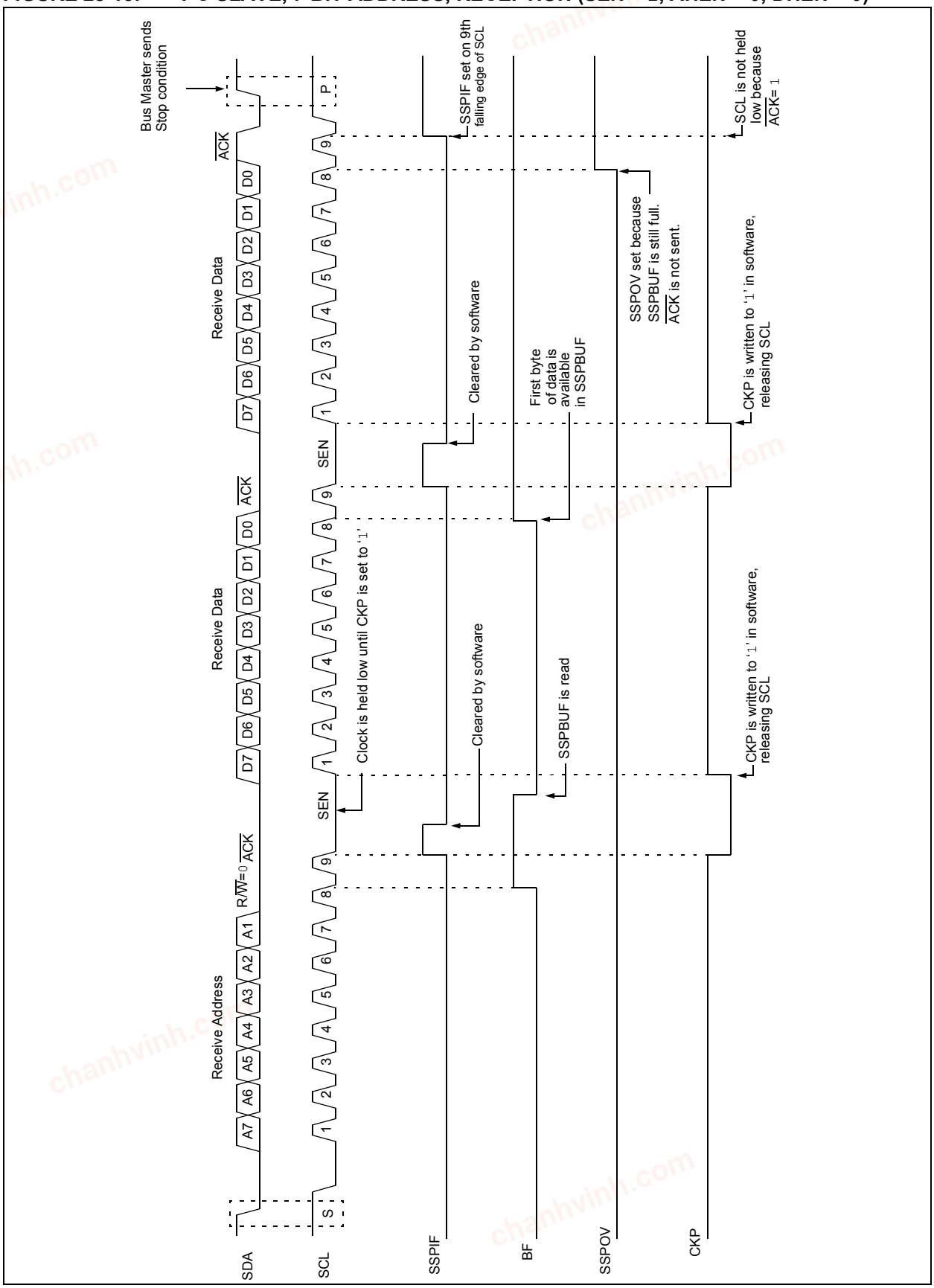

chanhvinh.com



**FIGURE 28-16: I²C SLAVE, 7-BIT ADDRESS, RECEPTION (SEN = 0, AHEN = 1, DHEN = 1)**

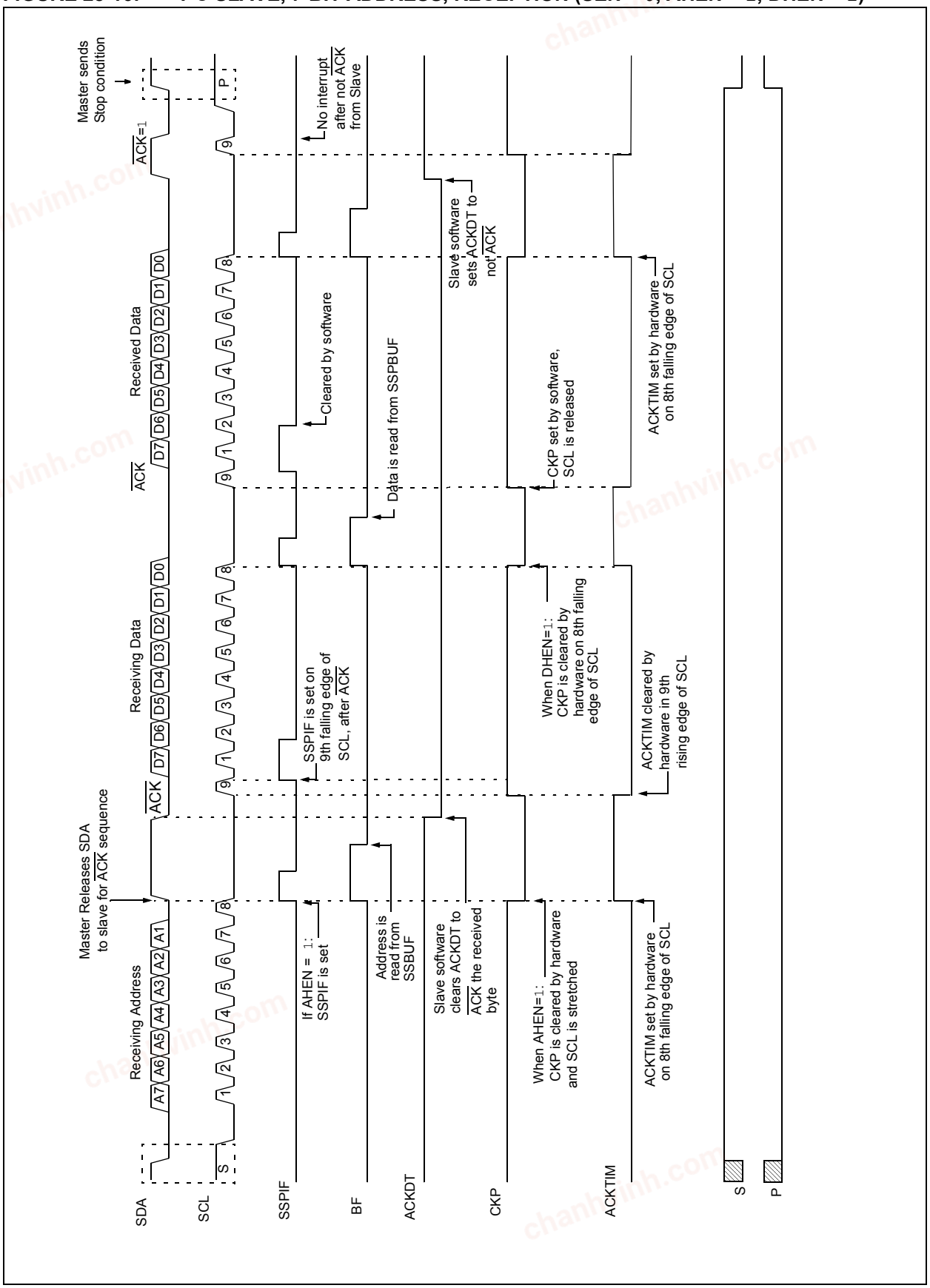


 © 2013 Microchip Technology Inc.

chanhvinh.com



**FIGURE 28-17: I²C SLAVE, 7-BIT ADDRESS, RECEPTION (SEN = 1, AHEN = 1, DHEN = 1)**

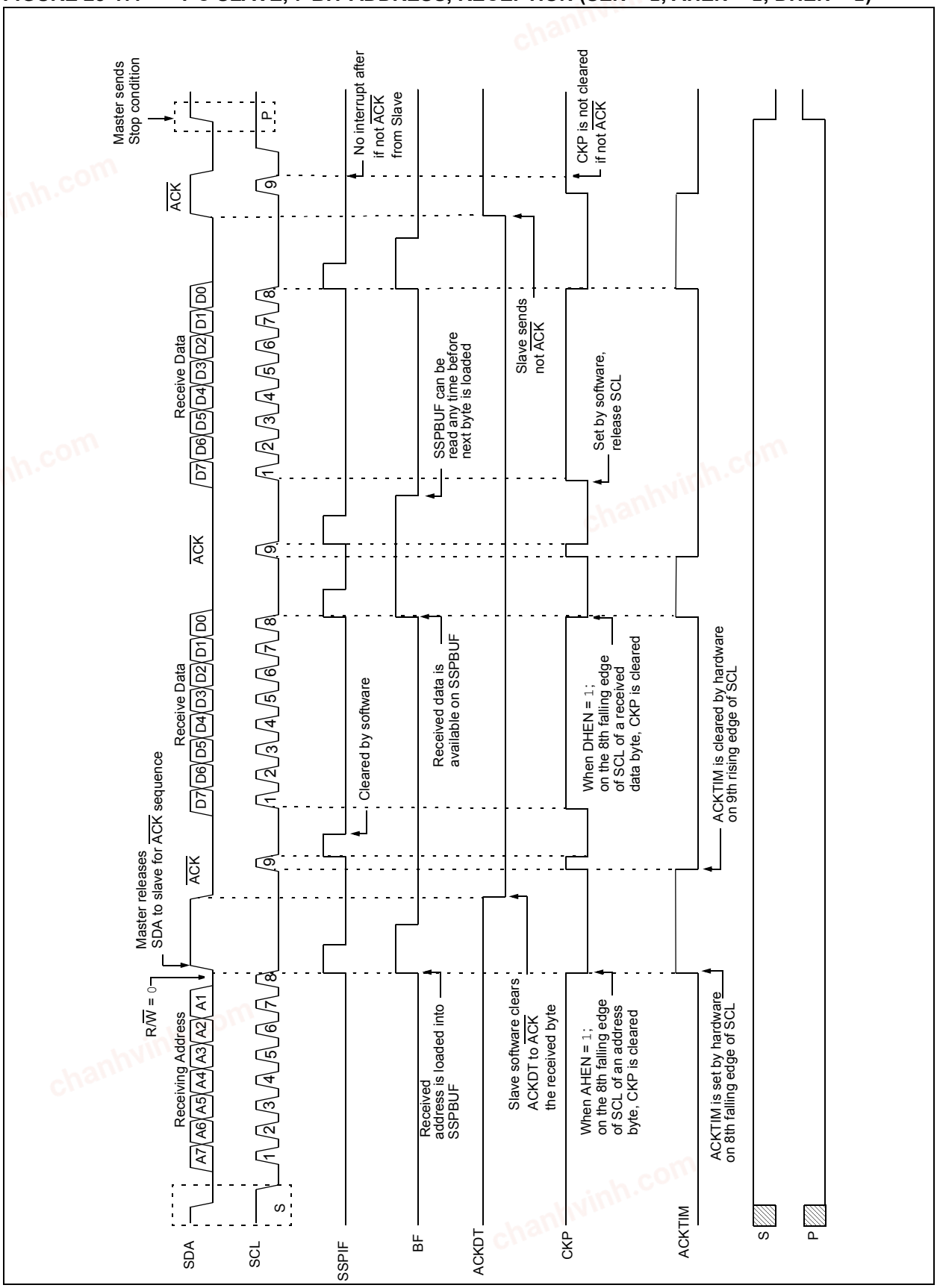

chanhvinh.com



### 28.5.3 SLAVE TRANSMISSION

When the R/$\overline{W}$ bit of the incoming address byte is set and an address match occurs, the R/$\overline{W}$ bit of the SSPSTAT register is set. The received address is loaded into the SSPBUF register, and an $\overline{ACK}$ pulse is sent by the slave on the ninth bit.

Following the $\overline{ACK}$, slave hardware clears the CKP bit and the SCL pin is held low (see **Section 28.5.6 "Clock Stretching"** for more detail). By stretching the clock, the master will be unable to assert another clock pulse until the slave is done preparing the transmit data.

The transmit data must be loaded into the SSPBUF register which also loads the SSPSR register. Then the SCL pin should be released by setting the CKP bit of the SSPCON1 register. The eight data bits are shifted out on the falling edge of the SCL input. This ensures that the SDA signal is valid during the SCL high time.

The $\overline{ACK}$ pulse from the master-receiver is latched on the rising edge of the ninth SCL input pulse. This $\overline{ACK}$ value is copied to the ACKSTAT bit of the SSPCON2 register. If ACKSTAT is set (not $\overline{ACK}$), then the data transfer is complete. In this case, when the not $\overline{ACK}$ is latched by the slave, the slave goes idle and waits for another occurrence of the Start bit. If the SDA line was low ($\overline{ACK}$), the next transmit data must be loaded into the SSPBUF register. Again, the SCL pin must be released by setting bit CKP.

An MSSP interrupt is generated for each data transfer byte. The SSPIF bit must be cleared by software and the SSPSTAT register is used to determine the status of the byte. The SSPIF bit is set on the falling edge of the ninth clock pulse.

#### 28.5.3.1 Slave Mode Bus Collision

A slave receives a Read request and begins shifting data out on the SDA line. If a bus collision is detected and the SBCDE bit of the SSPCON3 register is set, the BCLIF bit of the PIR register is set. Once a bus collision is detected, the slave goes idle and waits to be addressed again. User software can use the BCLIF bit to handle a slave bus collision.

#### 28.5.3.2 7-bit Transmission

A master device can transmit a read request to a slave, and then clock data out of the slave. The list below outlines what software for a slave will need to do to accomplish a standard transmission. Figure 28-18 can be used as a reference to this list.

1. Master sends a Start condition on SDA and SCL.
2. S bit of SSPSTAT is set; SSPIF is set if interrupt on Start detect is enabled.
3. Matching address with R/$\overline{W}$ bit set is received by the Slave setting SSPIF bit.
4. Slave hardware generates an $\overline{ACK}$ and sets SSPIF.
5. SSPIF bit is cleared by user.
6. Software reads the received address from SSPBUF, clearing BF.
7. R/$\overline{W}$ is set so CKP was automatically cleared after the $\overline{ACK}$.
8. The slave software loads the transmit data into SSPBUF.
9. CKP bit is set releasing SCL, allowing the master to clock the data out of the slave.
10. SSPIF is set after the $\overline{ACK}$ response from the master is loaded into the ACKSTAT register.
11. SSPIF bit is cleared.
12. The slave software checks the ACKSTAT bit to see if the master wants to clock out more data.

**Note 1:** If the master $\overline{ACK}$s the clock will be stretched.

**2:** ACKSTAT is the only bit updated on the rising edge of SCL (9th) rather than the falling.

13. Steps 9-13 are repeated for each transmitted byte.
14. If the master sends a not $\overline{ACK}$; the clock is not held, but SSPIF is still set.
15. The master sends a Restart condition or a Stop.
16. The slave is no longer addressed.

 © 2013 Microchip Technology Inc.

chanhvinh.com



**FIGURE 28-18: I²C SLAVE, 7-BIT ADDRESS, TRANSMISSION (AHEN = 0)**

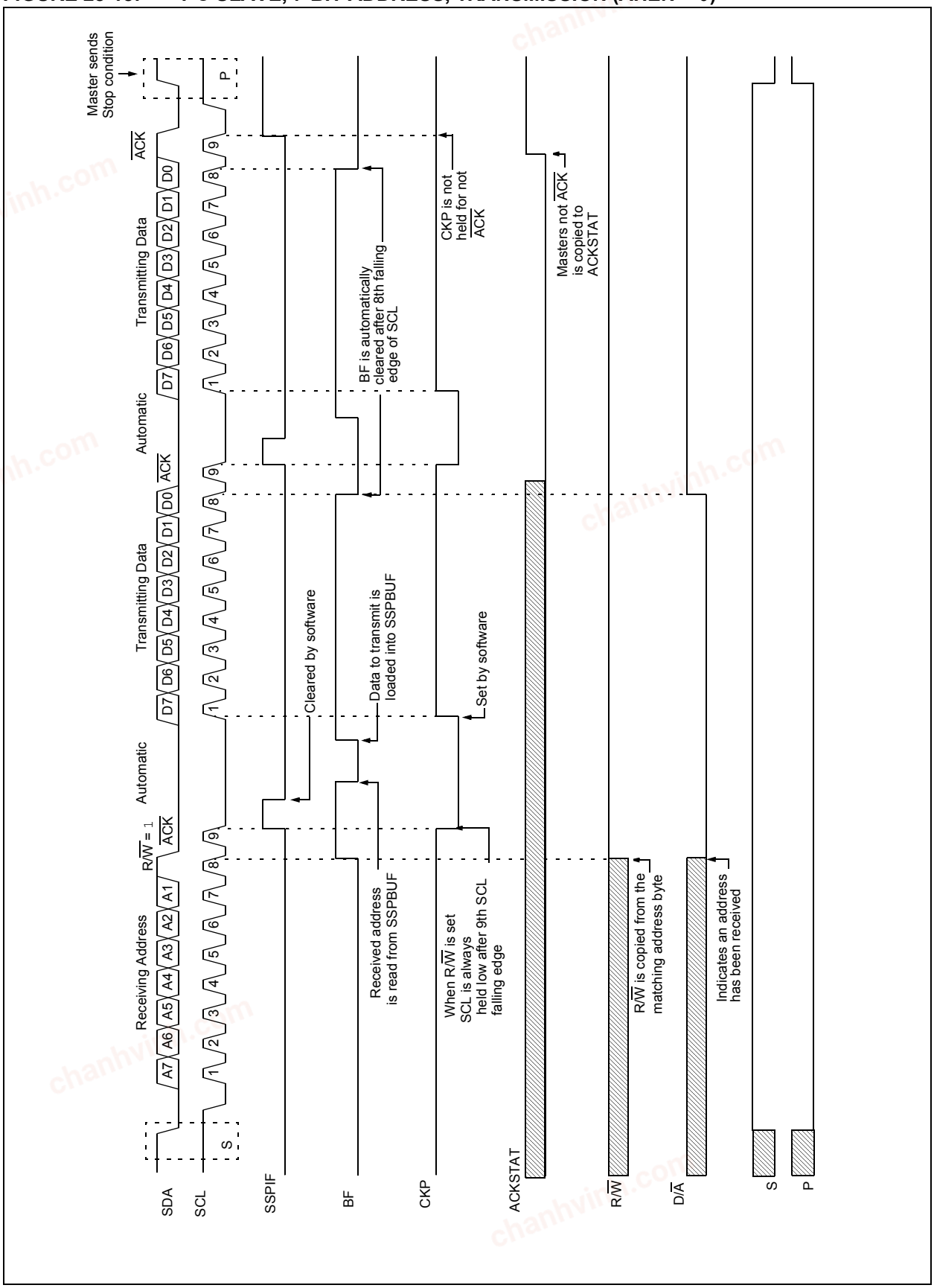

chanhvinh.com



#### 28.5.3.3 7-bit Transmission with Address Hold Enabled

Setting the AHEN bit of the SSPCON3 register enables additional clock stretching and interrupt generation after the eighth falling edge of a received matching address. Once a matching address has been clocked in, CKP is cleared and the SSPIF interrupt is set.

Figure 28-19 displays a standard waveform of a 7-bit address slave transmission with AHEN enabled.

1. Bus starts Idle.
2. Master sends Start condition; the S bit of SSPSTAT is set; SSPIF is set if interrupt on Start detect is enabled.
3. Master sends matching address with R/$\overline{W}$ bit set. After the eighth falling edge of the SCL line the CKP bit is cleared and SSPIF interrupt is generated.
4. Slave software clears SSPIF.
5. Slave software reads ACKTIM bit of SSPCON3 register, and R/$\overline{W}$ and D/$\overline{A}$ of the SSPSTAT register to determine the source of the interrupt.
6. Slave reads the address value from the SSPBUF register clearing the BF bit.
7. Slave software decides from this information if it wishes to $\overline{ACK}$ or not $\overline{ACK}$ and sets the ACKDT bit of the SSPCON2 register accordingly.
8. Slave sets the CKP bit releasing SCL.
9. Master clocks in the $\overline{ACK}$ value from the slave.
10. Slave hardware automatically clears the CKP bit and sets SSPIF after the $\overline{ACK}$ if the R/$\overline{W}$ bit is set.
11. Slave software clears SSPIF.
12. Slave loads value to transmit to the master into SSPBUF setting the BF bit.

**Note:** SSPBUF cannot be loaded until after the $\overline{ACK}$.

13. Slave sets the CKP bit releasing the clock.
14. Master clocks out the data from the slave and sends an $\overline{ACK}$ value on the 9th SCL pulse.
15. Slave hardware copies the $\overline{ACK}$ value into the ACKSTAT bit of the SSPCON2 register.
16. Steps 10-15 are repeated for each byte transmitted to the master from the slave.
17. If the master sends a not $\overline{ACK}$ the slave releases the bus allowing the master to send a Stop and end the communication.

**Note:** Master must send a not $\overline{ACK}$ on the last byte to ensure that the slave releases the SCL line to receive a Stop.

 © 2013 Microchip Technology Inc.

chanhvinh.com



**FIGURE 28-19: I²C SLAVE, 7-BIT ADDRESS, TRANSMISSION (AHEN = 1)**

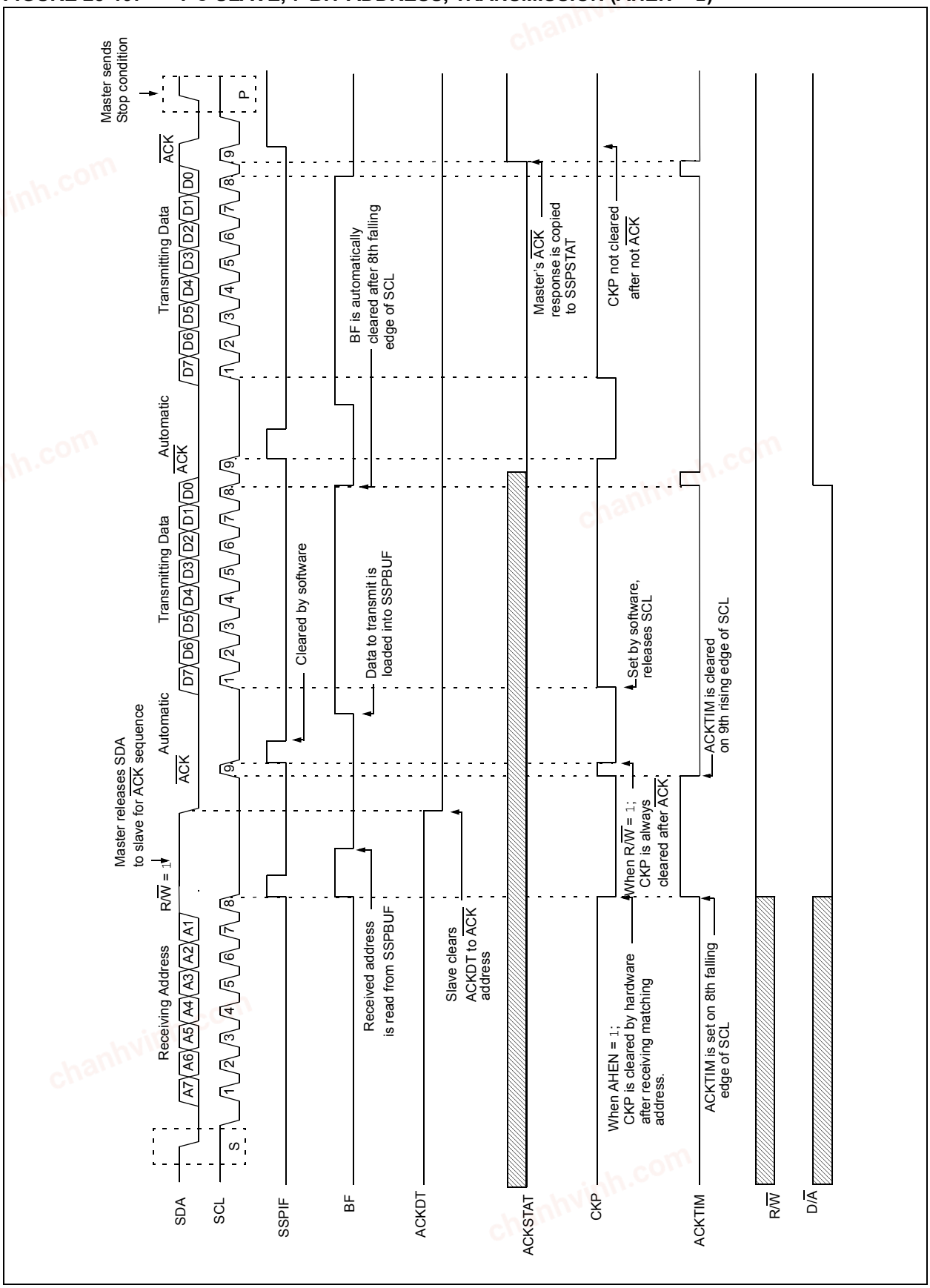

chanhvinh.com



### 28.5.4 SLAVE MODE 10-BIT ADDRESS RECEPTION

This section describes a standard sequence of events for the MSSP module configured as an $I^2C$ slave in 10-bit Addressing mode.

Figure 28-20 is used as a visual reference for this description.

This is a step by step process of what must be done by slave software to accomplish $I^2C$ communication.

1. Bus starts Idle.
2. Master sends Start condition; S bit of SSPSTAT is set; SSPIF is set if interrupt on Start detect is enabled.
3. Master sends matching high address with R/$\overline{W}$ bit clear; UA bit of the SSPSTAT register is set.
4. Slave sends $\overline{ACK}$ and SSPIF is set.
5. Software clears the SSPIF bit.
6. Software reads received address from SSPBUF clearing the BF flag.
7. Slave loads low address into SSPADD, releasing SCL.
8. Master sends matching low address byte to the slave; UA bit is set.

**Note:** Updates to the SSPADD register are not allowed until after the $\overline{ACK}$ sequence.

9. Slave sends $\overline{ACK}$ and SSPIF is set.

**Note:** If the low address does not match, SSPIF and UA are still set so that the slave software can set SSPADD back to the high address. BF is not set because there is no match. CKP is unaffected.

10. Slave clears SSPIF.
11. Slave reads the received matching address from SSPBUF clearing BF.
12. Slave loads high address into SSPADD.
13. Master clocks a data byte to the slave and clocks out the slaves $\overline{ACK}$ on the 9th SCL pulse; SSPIF is set.
14. If SEN bit of SSPCON2 is set, CKP is cleared by hardware and the clock is stretched.
15. Slave clears SSPIF.
16. Slave reads the received byte from SSPBUF clearing BF.
17. If SEN is set the slave sets CKP to release the SCL.
18. Steps 13-17 repeat for each received byte.
19. Master sends Stop to end the transmission.

### 28.5.5 10-BIT ADDRESSING WITH ADDRESS OR DATA HOLD

Reception using 10-bit addressing with AHEN or DHEN set is the same as with 7-bit modes. The only difference is the need to update the SSPADD register using the UA bit. All functionality, specifically when the CKP bit is cleared and SCL line is held low are the same. Figure 28-21 can be used as a reference of a slave in 10-bit addressing with AHEN set.

Figure 28-22 shows a standard waveform for a slave transmitter in 10-bit Addressing mode.

 © 2013 Microchip Technology Inc.

chanhvinh.com



**FIGURE 28-20: I²C SLAVE, 10-BIT ADDRESS, RECEPTION (SEN = 1, AHEN = 0, DHEN = 0)**

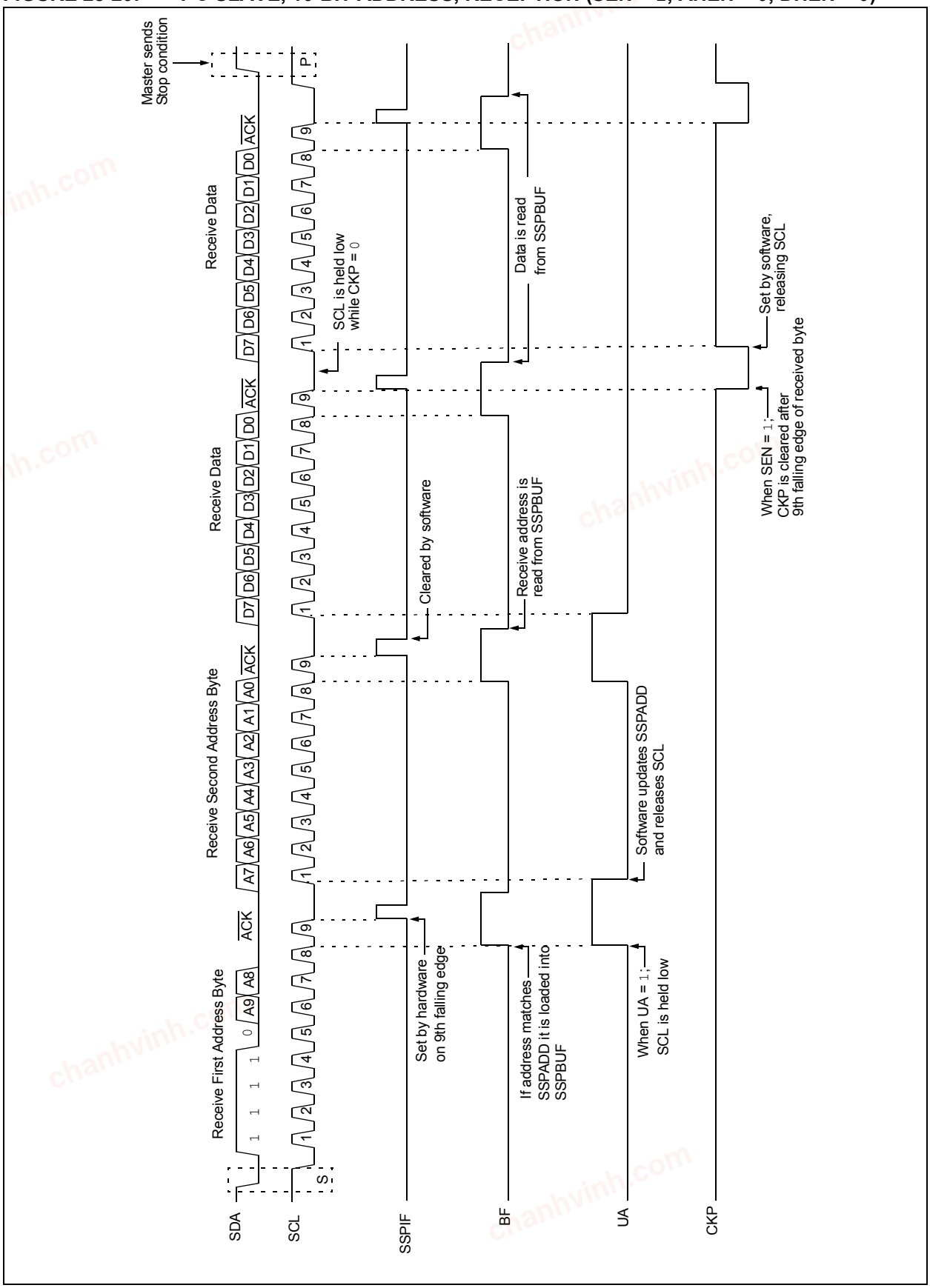

chanhvinh.com



**FIGURE 28-21: I²C SLAVE, 10-BIT ADDRESS, RECEPTION (SEN = 0, AHEN = 1, DHEN = 0)**

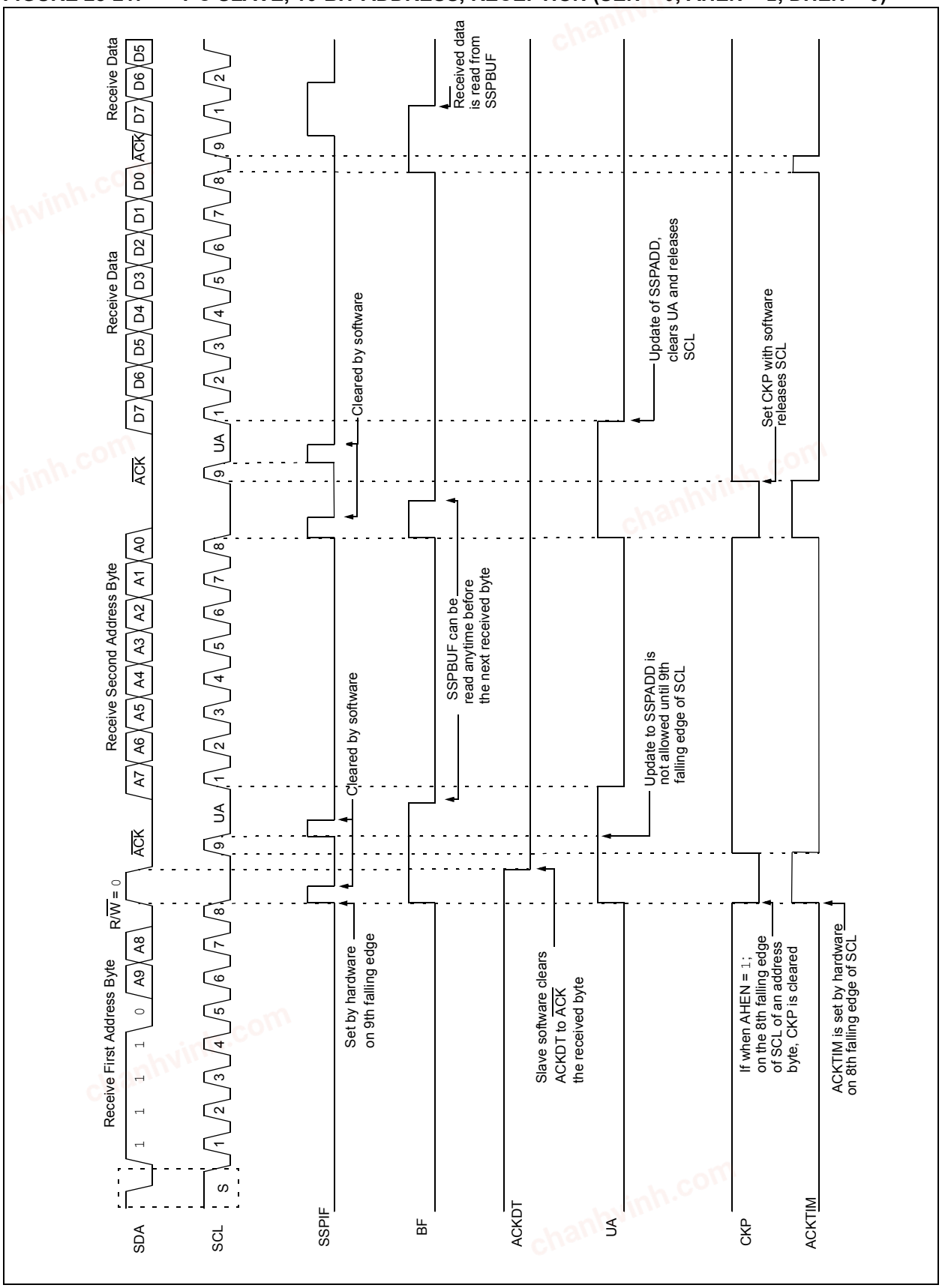


 © 2013 Microchip Technology Inc.

chanhvinh.com



**FIGURE 28-22: I²C SLAVE, 10-BIT ADDRESS, TRANSMISSION (SEN = 0, AHEN = 0, DHEN = 0)**

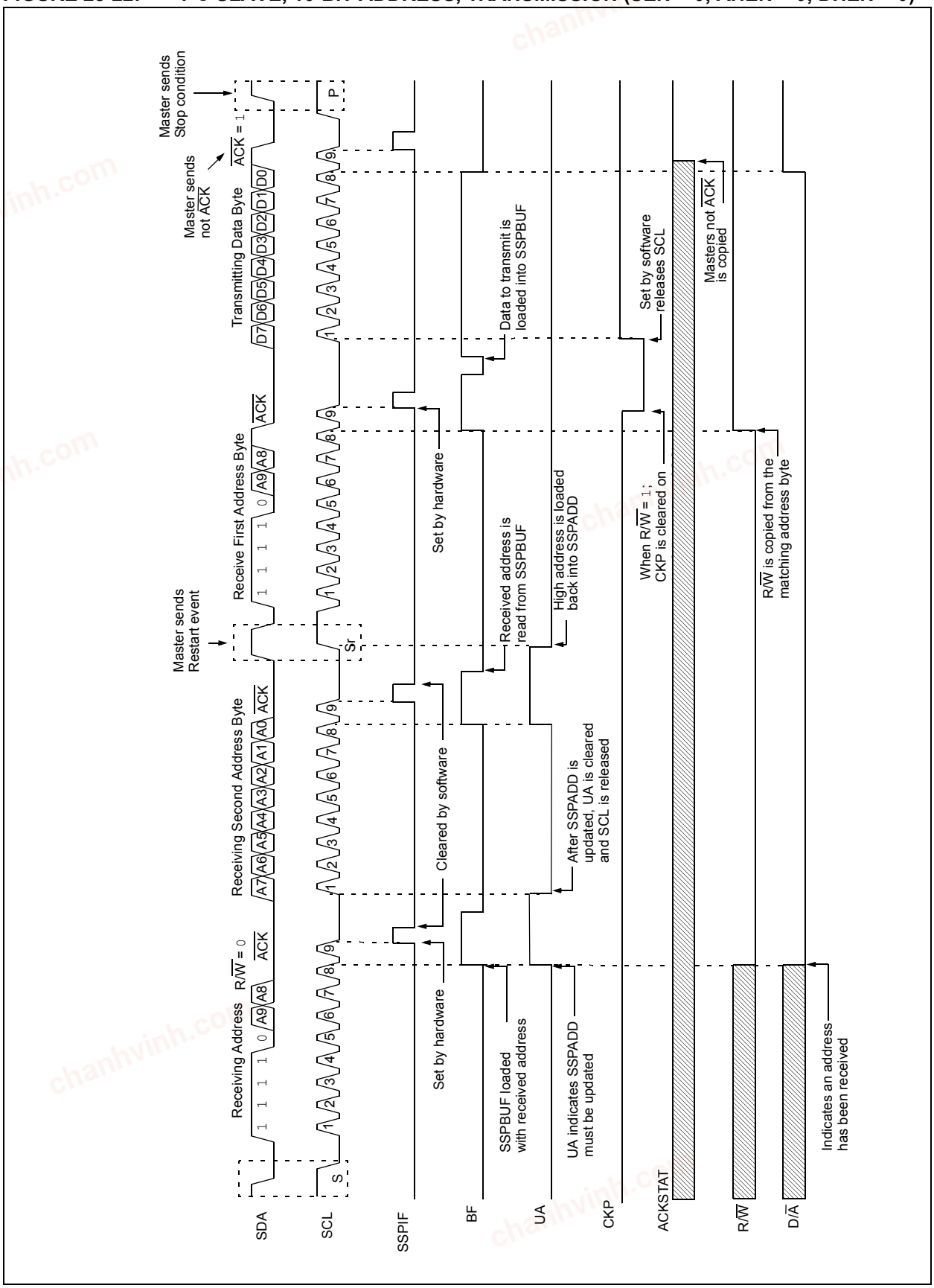

chanhvinh.com



### 28.5.6 CLOCK STRETCHING

Clock stretching occurs when a device on the bus holds the SCL line low, effectively pausing communication. The slave may stretch the clock to allow more time to handle data or prepare a response for the master device. A master device is not concerned with stretching as anytime it is active on the bus and not transferring data it is stretching. Any stretching done by a slave is invisible to the master software and handled by the hardware that generates SCL.

The CKP bit of the SSPCON1 register is used to control stretching in software. Any time the CKP bit is cleared, the module will wait for the SCL line to go low and then hold it. Setting CKP will release SCL and allow more communication.

#### 28.5.6.1 Normal Clock Stretching

Following an $\overline{ACK}$ if the R/$\overline{W}$ bit of SSPSTAT is set, a read request, the slave hardware will clear CKP. This allows the slave time to update SSPBUF with data to transfer to the master. If the SEN bit of SSPCON2 is set, the slave hardware will always stretch the clock after the $\overline{ACK}$ sequence. Once the slave is ready; CKP is set by software and communication resumes.

**Note 1:** The BF bit has no effect on if the clock will be stretched or not. This is different than previous versions of the module that would not stretch the clock, clear CKP, if SSPBUF was read before the 9th falling edge of SCL.

**2:** Previous versions of the module did not stretch the clock for a transmission if SSPBUF was loaded before the 9th falling edge of SCL. It is now always cleared for read requests.

#### 28.5.6.2 10-bit Addressing Mode

In 10-bit Addressing mode, when the UA bit is set the clock is always stretched. This is the only time the SCL is stretched without CKP being cleared. SCL is released immediately after a write to SSPADD.

**Note:** Previous versions of the module did not stretch the clock if the second address byte did not match.

#### 28.5.6.3 Byte NACKing

When AHEN bit of SSPCON3 is set; CKP is cleared by hardware after the eighth falling edge of SCL for a received matching address byte. When DHEN bit of SSPCON3 is set; CKP is cleared after the eighth falling edge of SCL for received data.

Stretching after the eighth falling edge of SCL allows the slave to look at the received address or data and decide if it wants to ACK the received data.

### 28.5.7 CLOCK SYNCHRONIZATION AND THE CKP BIT

Any time the CKP bit is cleared, the module will wait for the SCL line to go low and then hold it. However, clearing the CKP bit will not assert the SCL output low until the SCL output is already sampled low. Therefore, the CKP bit will not assert the SCL line until an external $I^2C$ master device has already asserted the SCL line. The SCL output will remain low until the CKP bit is set and all other devices on the $I^2C$ bus have released SCL. This ensures that a write to the CKP bit will not violate the minimum high time requirement for SCL (see Figure 28-23).

**FIGURE 28-23: CLOCK SYNCHRONIZATION TIMING**

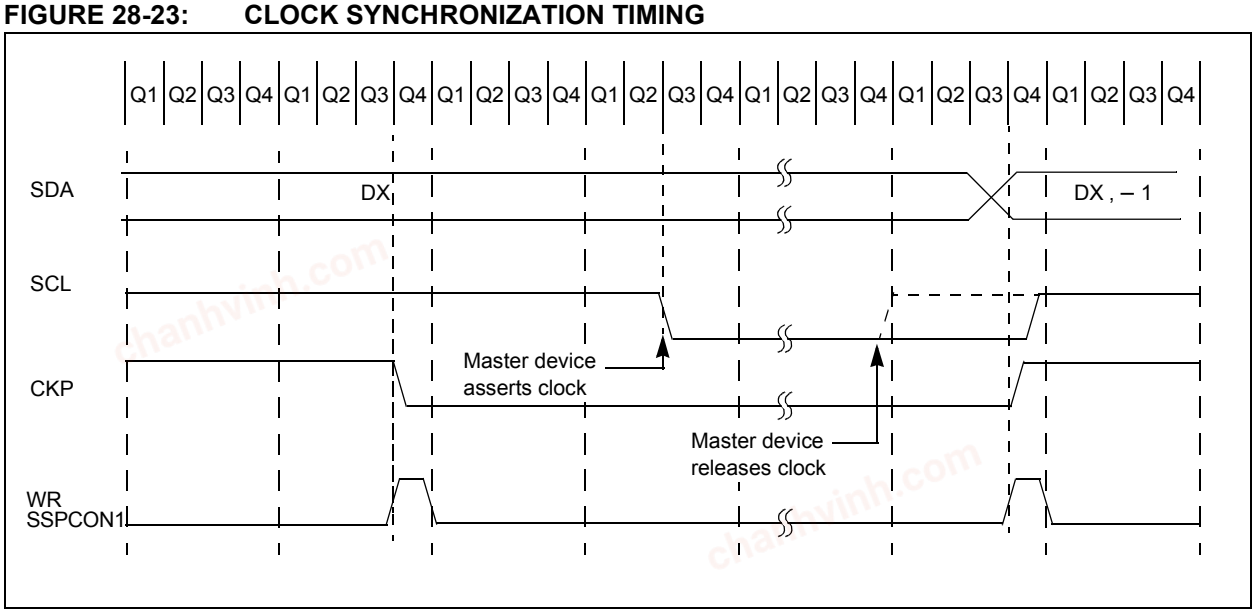


 © 2013 Microchip Technology Inc.

chanhvinh.com



### 28.5.8 GENERAL CALL ADDRESS SUPPORT

The addressing procedure for the I²C bus is such that the first byte after the Start condition usually determines which device will be the slave addressed by the master device. The exception is the general call address which can address all devices. When this address is used, all devices should, in theory, respond with an acknowledge.

The general call address is a reserved address in the I²C protocol, defined as address 0x00. When the GCEN bit of the SSPCON2 register is set, the slave module will automatically ACK the reception of this address regardless of the value stored in SSPADD. After the slave clocks in an address of all zeros with the R/W bit clear, an interrupt is generated and slave software can read SSPBUF and respond. Figure 28-24 shows a general call reception sequence.

In 10-bit Address mode, the UA bit will not be set on the reception of the general call address. The slave will prepare to receive the second byte as data, just as it would in 7-bit mode.

If the AHEN bit of the SSPCON3 register is set, just as with any other address reception, the slave hardware will stretch the clock after the eighth falling edge of SCL. The slave must then set its ACKDT value and release the clock with communication progressing as it would normally.

**FIGURE 28-24: SLAVE MODE GENERAL CALL ADDRESS SEQUENCE**

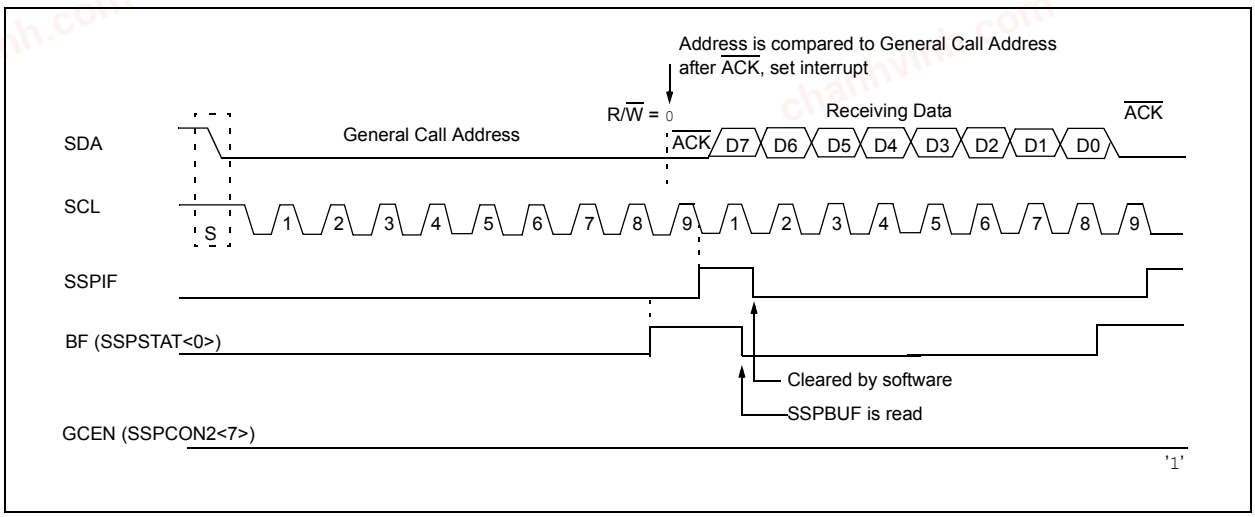


### 28.5.9 SSP MASK REGISTER

An SSP Mask (SSPMSK) register (Register 28-5) is available in I²C Slave mode as a mask for the value held in the SSPSR register during an address comparison operation. A zero ('0') bit in the SSPMSK register has the effect of making the corresponding bit of the received address a "don't care".

This register is reset to all '1's upon any Reset condition and, therefore, has no effect on standard SSP operation until written with a mask value.

The SSP Mask register is active during:

- 7-bit Address mode: address compare of A<7:1>.
- 10-bit Address mode: address compare of A<7:0> only. The SSP mask has no effect during the reception of the first (high) byte of the address.

chanhvinh.com



## 28.6 I²C Master Mode

Master mode is enabled by setting and clearing the appropriate SSPM bits in the SSPCON1 register and by setting the SSPEN bit. In Master mode, the SDA and SCK pins must be configured as inputs. The MSSP peripheral hardware will override the output driver TRIS controls when necessary to drive the pins low.

Master mode of operation is supported by interrupt generation on the detection of the Start and Stop conditions. The Stop (P) and Start (S) bits are cleared from a Reset or when the MSSP module is disabled. Control of the I²C bus may be taken when the P bit is set, or the bus is Idle.

In Firmware Controlled Master mode, user code conducts all I²C bus operations based on Start and Stop bit condition detection. Start and Stop condition detection is the only active circuitry in this mode. All other communication is done by the user software directly manipulating the SDA and SCL lines.

The following events will cause the SSP Interrupt Flag bit, SSPIF, to be set (SSP interrupt, if enabled):

- Start condition detected
- Stop condition detected
- Data transfer byte transmitted/received
- Acknowledge transmitted/received
- Repeated Start generated

**Note 1:** The MSSP module, when configured in I²C Master mode, does not allow queueing of events. For instance, the user is not allowed to initiate a Start condition and immediately write the SSPBUF register to initiate transmission before the Start condition is complete. In this case, the SSPBUF will not be written to and the WCOL bit will be set, indicating that a write to the SSPBUF did not occur

**2:** When in Master mode, Start/Stop detection is masked and an interrupt is generated when the SEN/PEN bit is cleared and the generation is complete.

### 28.6.1 I²C MASTER MODE OPERATION

The master device generates all of the serial clock pulses and the Start and Stop conditions. A transfer is ended with a Stop condition or with a Repeated Start condition. Since the Repeated Start condition is also the beginning of the next serial transfer, the I²C bus will not be released.

In Master Transmitter mode, serial data is output through SDA, while SCL outputs the serial clock. The first byte transmitted contains the slave address of the receiving device (7 bits) and the Read/Write (R/$\overline{W}$) bit. In this case, the R/$\overline{W}$ bit will be logic '0'. Serial data is transmitted eight bits at a time. After each byte is transmitted, an Acknowledge bit is received. Start and Stop conditions are output to indicate the beginning and the end of a serial transfer.

In Master Receive mode, the first byte transmitted contains the slave address of the transmitting device (7 bits) and the R/$\overline{W}$ bit. In this case, the R/$\overline{W}$ bit will be logic '1'. Thus, the first byte transmitted is a 7-bit slave address followed by a '1' to indicate the receive bit. Serial data is received via SDA, while SCL outputs the serial clock. Serial data is received eight bits at a time. After each byte is received, an Acknowledge bit is transmitted. Start and Stop conditions indicate the beginning and end of transmission.

A Baud Rate Generator is used to set the clock frequency output on SCL. See **Section 28.7 "Baud Rate Generator"** for more detail.

 © 2013 Microchip Technology Inc.

chanhvinh.com



### 28.6.2 CLOCK ARBITRATION

Clock arbitration occurs when the master, during any receive, transmit or Repeated Start/Stop condition, releases the SCL pin (SCL allowed to float high). When the SCL pin is allowed to float high, the Baud Rate Generator (BRG) is suspended from counting until the SCL pin is actually sampled high. When the SCL pin is sampled high, the Baud Rate Generator is reloaded with the contents of SSPADD<7:0> and begins counting. This ensures that the SCL high time will always be at least one BRG rollover count in the event that the clock is held low by an external device (Figure 28-25).

**FIGURE 28-25: BAUD RATE GENERATOR TIMING WITH CLOCK ARBITRATION**

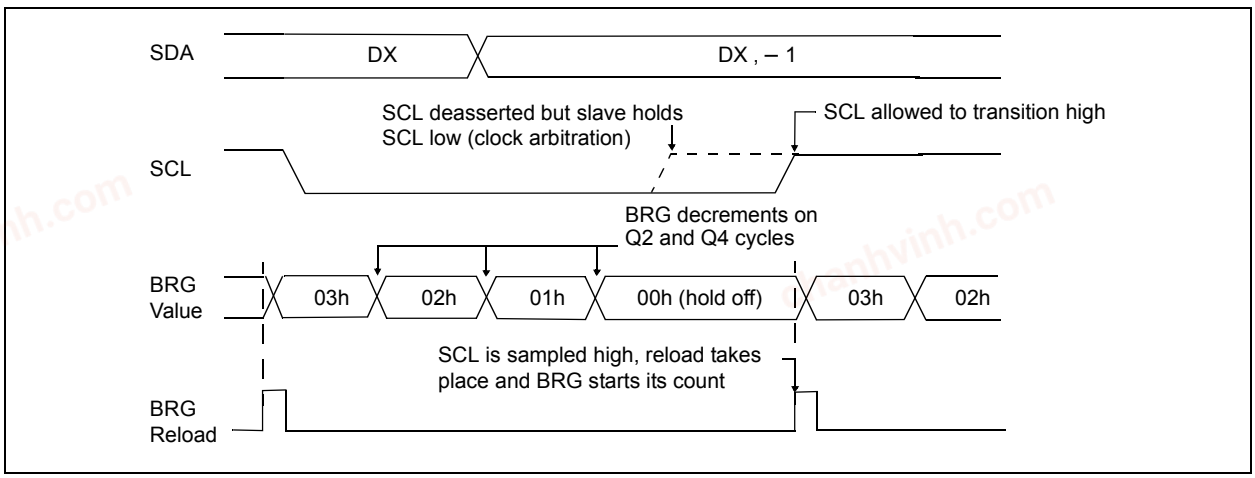


### 28.6.3 WCOL STATUS FLAG

If the user writes the SSPBUF when a Start, Restart, Stop, Receive or Transmit sequence is in progress, the WCOL is set and the contents of the buffer are unchanged (the write does not occur). Any time the WCOL bit is set it indicates that an action on SSPBUF was attempted while the module was not idle.

| | |
|---|---|
| **Note:** | Because queueing of events is not allowed, writing to the lower five bits of SSPCON2 is disabled until the Start condition is complete. |

chanhvinh.com



### 28.6.4 I²C MASTER MODE START CONDITION TIMING

To initiate a Start condition (Figure 28-26), the user sets the Start Enable bit, SEN bit of the SSPCON2 register. If the SDA and SCL pins are sampled high, the Baud Rate Generator is reloaded with the contents of SSPADD<7:0> and starts its count. If SCL and SDA are both sampled high when the Baud Rate Generator times out (TBRG), the SDA pin is driven low. The action of the SDA being driven low while SCL is high is the Start condition and causes the S bit of the SSPSTAT1 register to be set. Following this, the Baud Rate Generator is reloaded with the contents of SSPADD<7:0> and resumes its count. When the Baud Rate Generator times out (TBRG), the SEN bit of the SSPCON2 register will be automatically cleared by hardware; the Baud Rate Generator is suspended, leaving the SDA line held low and the Start condition is complete.

**Note 1:** If at the beginning of the Start condition, the SDA and SCL pins are already sampled low, or if during the Start condition, the SCL line is sampled low before the SDA line is driven low, a bus collision occurs, the Bus Collision Interrupt Flag, BCLIF, is set, the Start condition is aborted and the I²C module is reset into its Idle state.

**2:** The Philips I²C™ specification states that a bus collision cannot occur on a Start.

**FIGURE 28-26: FIRST START BIT TIMING**

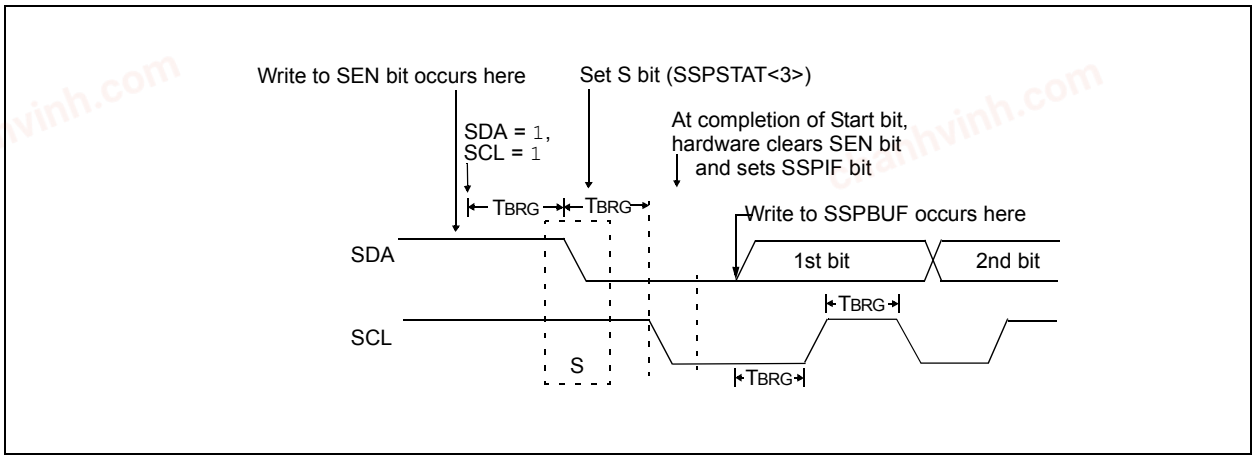


 © 2013 Microchip Technology Inc.

chanhvinh.com



### 28.6.5 I²C MASTER MODE REPEATED START CONDITION TIMING

A Repeated Start condition (Figure 28-27) occurs when the RSEN bit of the SSPCON2 register is programmed high and the master state machine is no longer active. When the RSEN bit is set, the SCL pin is asserted low. When the SCL pin is sampled low, the Baud Rate Generator is loaded and begins counting. The SDA pin is released (brought high) for one Baud Rate Generator count (TBRG). When the Baud Rate Generator times out, if SDA is sampled high, the SCL pin will be deasserted (brought high). When SCL is sampled high, the Baud Rate Generator is reloaded and begins counting. SDA and SCL must be sampled high for one TBRG. This action is then followed by assertion of the SDA pin (SDA = 0) for one TBRG while SCL is high. SCL is asserted low. Following this, the RSEN bit of the SSPCON2 register will be automatically cleared and the Baud Rate Generator will not be reloaded, leaving the SDA pin held low. As soon as a Start condition is detected on the SDA and SCL pins, the S bit of the SSPSTAT register will be set. The SSPIF bit will not be set until the Baud Rate Generator has timed out.

**Note 1:** If RSEN is programmed while any other event is in progress, it will not take effect.

**2:** A bus collision during the Repeated Start condition occurs if:

- SDA is sampled low when SCL goes from low-to-high.
- SCL goes low before SDA is asserted low. This may indicate that another master is attempting to transmit a data '1'.

**FIGURE 28-27: REPEATED START CONDITION WAVEFORM**

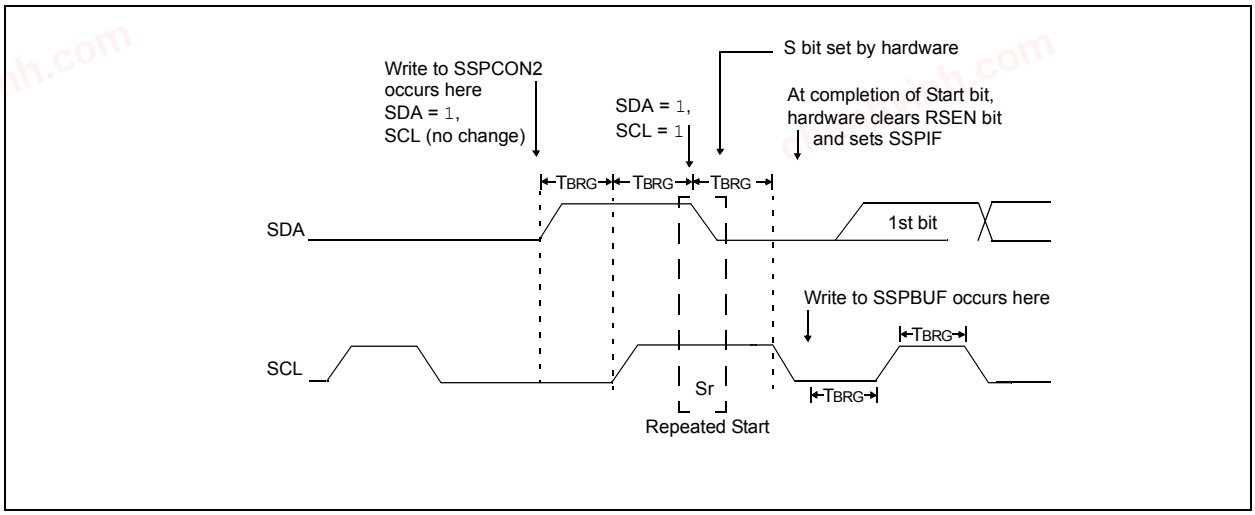

chanhvinh.com



### 28.6.6 I²C MASTER MODE TRANSMISSION

Transmission of a data byte, a 7-bit address or the other half of a 10-bit address is accomplished by simply writing a value to the SSPBUF register. This action will set the Buffer Full flag bit, BF, and allow the Baud Rate Generator to begin counting and start the next transmission. Each bit of address/data will be shifted out onto the SDA pin after the falling edge of SCL is asserted. SCL is held low for one Baud Rate Generator rollover count (TBRG). Data should be valid before SCL is released high. When the SCL pin is released high, it is held that way for TBRG. The data on the SDA pin must remain stable for that duration and some hold time after the next falling edge of SCL. After the eighth bit is shifted out (the falling edge of the eighth clock), the BF flag is cleared and the master releases SDA. This allows the slave device being addressed to respond with an $\overline{ACK}$ bit during the ninth bit time if an address match occurred, or if data was received properly. The status of $\overline{ACK}$ is written into the ACKSTAT bit on the rising edge of the ninth clock. If the master receives an Acknowledge, the Acknowledge Status bit, ACKSTAT, is cleared. If not, the bit is set. After the ninth clock, the SSPIF bit is set and the master clock (Baud Rate Generator) is suspended until the next data byte is loaded into the SSPBUF, leaving SCL low and SDA unchanged (Figure 28-28).

After the write to the SSPBUF, each bit of the address will be shifted out on the falling edge of SCL until all seven address bits and the R/$\overline{W}$ bit are completed. On the falling edge of the eighth clock, the master will release the SDA pin, allowing the slave to respond with an Acknowledge. On the falling edge of the ninth clock, the master will sample the SDA pin to see if the address was recognized by a slave. The status of the $\overline{ACK}$ bit is loaded into the ACKSTAT Status bit of the SSPCON2 register. Following the falling edge of the ninth clock transmission of the address, the SSPIF is set, the BF flag is cleared and the Baud Rate Generator is turned off until another write to the SSPBUF takes place, holding SCL low and allowing SDA to float.

#### 28.6.6.1 BF Status Flag

In Transmit mode, the BF bit of the SSPSTAT register is set when the CPU writes to SSPBUF and is cleared when all eight bits are shifted out.

#### 28.6.6.2 WCOL Status Flag

If the user writes the SSPBUF when a transmit is already in progress (i.e., SSPSR is still shifting out a data byte), the WCOL bit is set and the contents of the buffer are unchanged (the write does not occur).

WCOL must be cleared by software before the next transmission.

#### 28.6.6.3 ACKSTAT Status Flag

In Transmit mode, the ACKSTAT bit of the SSPCON2 register is cleared when the slave has sent an Acknowledge ($\overline{ACK}$ = 0) and is set when the slave does not Acknowledge ($\overline{ACK}$ = 1). A slave sends an Acknowledge when it has recognized its address (including a general call), or when the slave has properly received its data.

#### 28.6.6.4 Typical transmit sequence:

1. The user generates a Start condition by setting the SEN bit of the SSPCON2 register.
2. SSPIF is set by hardware on completion of the Start.
3. SSPIF is cleared by software.
4. The MSSP module will wait the required start time before any other operation takes place.
5. The user loads the SSPBUF with the slave address to transmit.
6. Address is shifted out the SDA pin until all eight bits are transmitted. Transmission begins as soon as SSPBUF is written to.
7. The MSSP module shifts in the $\overline{ACK}$ bit from the slave device and writes its value into the ACKSTAT bit of the SSPCON2 register.
8. The MSSP module generates an interrupt at the end of the ninth clock cycle by setting the SSPIF bit.
9. The user loads the SSPBUF with eight bits of data.
10. Data is shifted out the SDA pin until all eight bits are transmitted.
11. The MSSP module shifts in the $\overline{ACK}$ bit from the slave device and writes its value into the ACKSTAT bit of the SSPCON2 register.
12. Steps 8-11 are repeated for all transmitted data bytes.
13. The user generates a Stop or Restart condition by setting the PEN or RSEN bits of the SSPCON2 register. Interrupt is generated once the Stop/Restart condition is complete.

 © 2013 Microchip Technology Inc.

chanhvinh.com



**FIGURE 28-28: I²C MASTER MODE WAVEFORM (TRANSMISSION, 7 OR 10-BIT ADDRESS)**

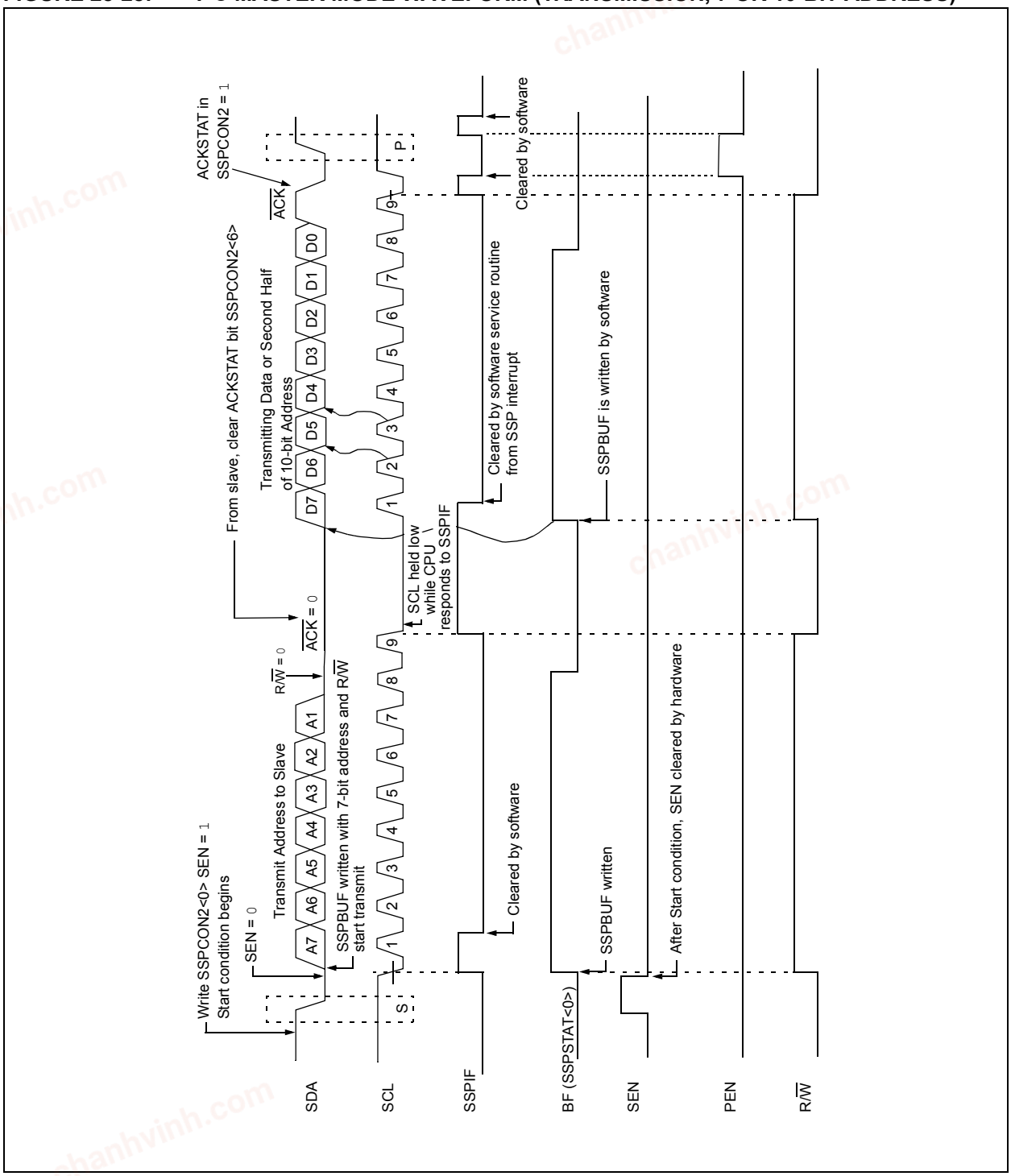

chanhvinh.com



### 28.6.7 I²C MASTER MODE RECEPTION

Master mode reception (Figure 28-29) is enabled by programming the Receive Enable bit, RCEN bit of the SSP1CON2 register.

| **Note:** | The MSSP module must be in an Idle state before the RCEN bit is set or the RCEN bit will be disregarded. |
|---|---|

The Baud Rate Generator begins counting and on each rollover, the state of the SCL pin changes (high-to-low/low-to-high) and data is shifted into the SSPSR. After the falling edge of the eighth clock, the receive enable flag is automatically cleared, the contents of the SSPSR are loaded into the SSPBUF, the BF flag bit is set, the SSPIF flag bit is set and the Baud Rate Generator is suspended from counting, holding SCL low. The MSSP is now in Idle state awaiting the next command. When the buffer is read by the CPU, the BF flag bit is automatically cleared. The user can then send an Acknowledge bit at the end of reception by setting the Acknowledge Sequence Enable, ACKEN bit of the SSPCON2 register.

#### 28.6.7.1 BF Status Flag

In receive operation, the BF bit is set when an address or data byte is loaded into SSPBUF from SSPSR. It is cleared when the SSPBUF register is read.

#### 28.6.7.2 SSPOV Status Flag

In receive operation, the SSPOV bit is set when eight bits are received into the SSPSR and the BF flag bit is already set from a previous reception.

#### 28.6.7.3 WCOL Status Flag

If the user writes the SSPBUF when a receive is already in progress (i.e., SSPSR is still shifting in a data byte), the WCOL bit is set and the contents of the buffer are unchanged (the write does not occur).

#### 28.6.7.4 Typical Receive Sequence:

1. The user generates a Start condition by setting the SEN bit of the SSPCON2 register.
2. SSPIF is set by hardware on completion of the Start.
3. SSPIF is cleared by software.
4. User writes SSPBUF with the slave address to transmit and the R/$\overline{W}$ bit set.
5. Address is shifted out the SDA pin until all eight bits are transmitted. Transmission begins as soon as SSPBUF is written to.
6. The MSSP module shifts in the $\overline{ACK}$ bit from the slave device and writes its value into the ACKSTAT bit of the SSPCON2 register.
7. The MSSP module generates an interrupt at the end of the ninth clock cycle by setting the SSPIF bit.
8. User sets the RCEN bit of the SSPCON2 register and the master clocks in a byte from the slave.
9. After the eighth falling edge of SCL, SSPIF and BF are set.
10. Master clears SSPIF and reads the received byte from SSPUF, clears BF.
11. Master sets $\overline{ACK}$ value sent to slave in ACKDT bit of the SSPCON2 register and initiates the $\overline{ACK}$ by setting the ACKEN bit.
12. Master's $\overline{ACK}$ is clocked out to the slave and SSPIF is set.
13. User clears SSPIF.
14. Steps 8-13 are repeated for each received byte from the slave.
15. Master sends a not $\overline{ACK}$ or Stop to end communication.

 © 2013 Microchip Technology Inc.

chanhvinh.com



**FIGURE 28-29: I²C MASTER MODE WAVEFORM (RECEPTION, 7-BIT ADDRESS)**

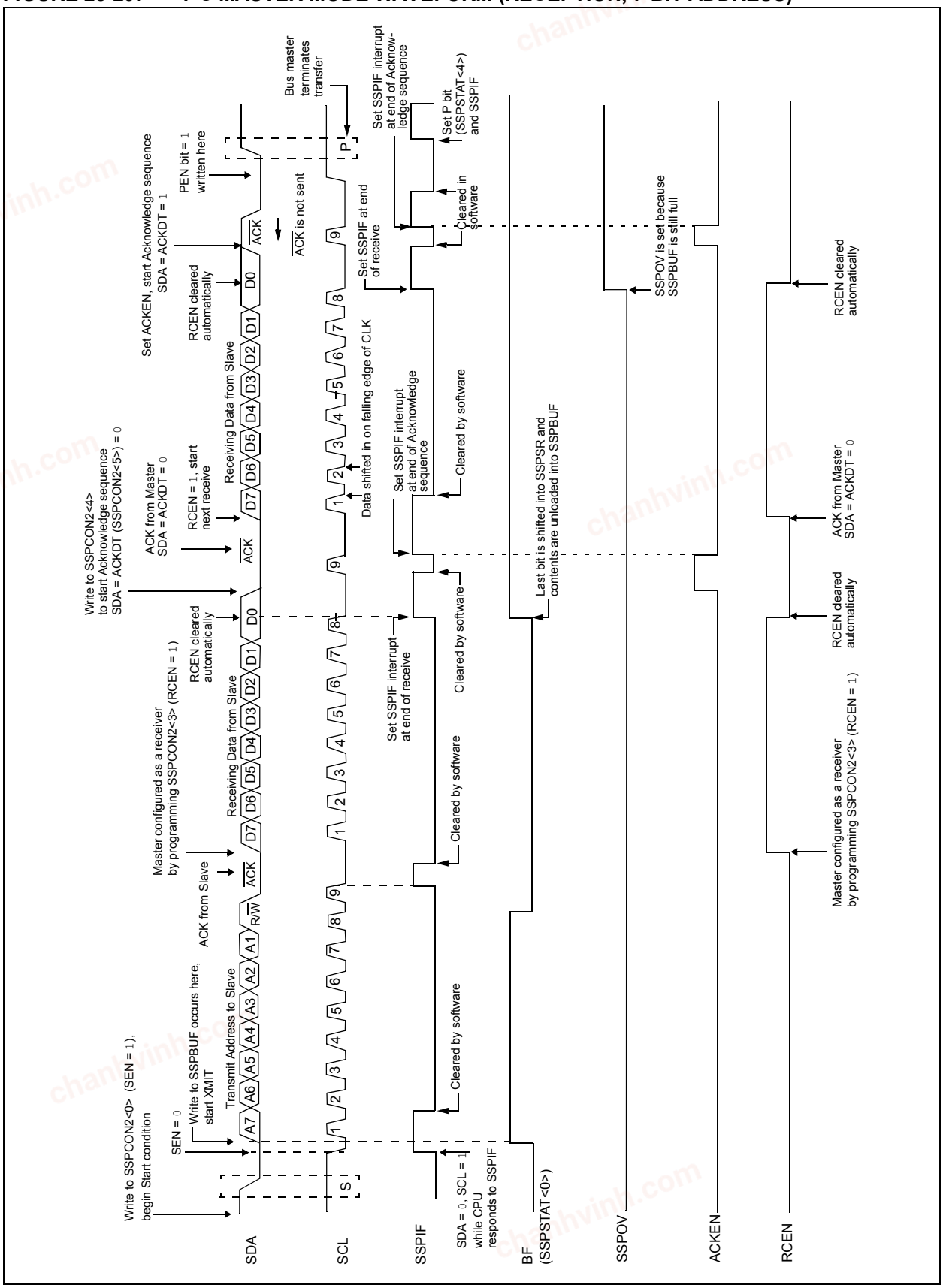

chanhvinh.com



### 28.6.8 ACKNOWLEDGE SEQUENCE TIMING

An Acknowledge sequence is enabled by setting the Acknowledge Sequence Enable bit, ACKEN bit of the SSPCON2 register. When this bit is set, the SCL pin is pulled low and the contents of the Acknowledge data bit are presented on the SDA pin. If the user wishes to generate an Acknowledge, then the ACKDT bit should be cleared. If not, the user should set the ACKDT bit before starting an Acknowledge sequence. The Baud Rate Generator then counts for one rollover period (TBRG) and the SCL pin is deasserted (pulled high). When the SCL pin is sampled high (clock arbitration), the Baud Rate Generator counts for TBRG. The SCL pin is then pulled low. Following this, the ACKEN bit is automatically cleared, the Baud Rate Generator is turned off and the MSSP module then goes into Idle mode (Figure 28-30).

#### 28.6.8.1 WCOL Status Flag

If the user writes the SSPBUF when an Acknowledge sequence is in progress, then WCOL bit is set and the contents of the buffer are unchanged (the write does not occur).

### 28.6.9 STOP CONDITION TIMING

A Stop bit is asserted on the SDA pin at the end of a receive/transmit by setting the Stop Sequence Enable bit, PEN bit of the SSPCON2 register. At the end of a receive/transmit, the SCL line is held low after the falling edge of the ninth clock. When the PEN bit is set, the master will assert the SDA line low. When the SDA line is sampled low, the Baud Rate Generator is reloaded and counts down to '0'. When the Baud Rate Generator times out, the SCL pin will be brought high and one TBRG (Baud Rate Generator rollover count) later, the SDA pin will be deasserted. When the SDA pin is sampled high while SCL is high, the P bit of the SSPSTAT register is set. A TBRG later, the PEN bit is cleared and the SSPIF bit is set (Figure 28-31).

#### 28.6.9.1 WCOL Status Flag

If the user writes the SSPBUF when a Stop sequence is in progress, then the WCOL bit is set and the contents of the buffer are unchanged (the write does not occur).

**FIGURE 28-30: ACKNOWLEDGE SEQUENCE WAVEFORM**

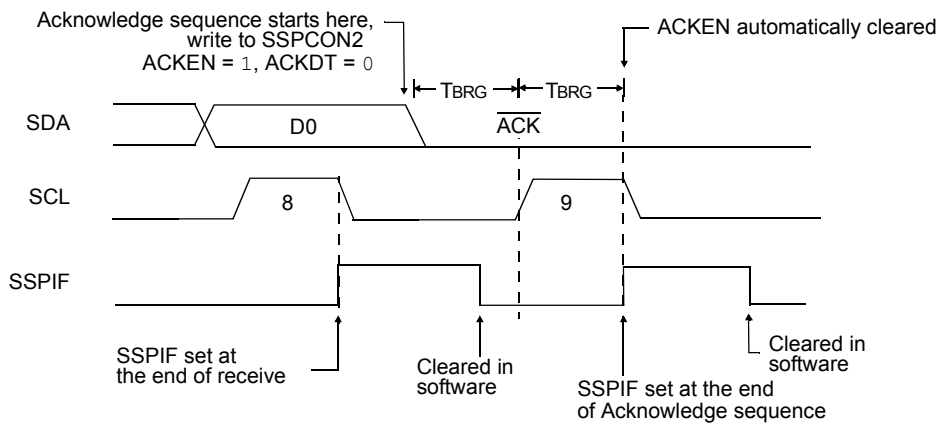


**Note:** TBRG = one Baud Rate Generator period.

**FIGURE 28-31: STOP CONDITION RECEIVE OR TRANSMIT MODE**

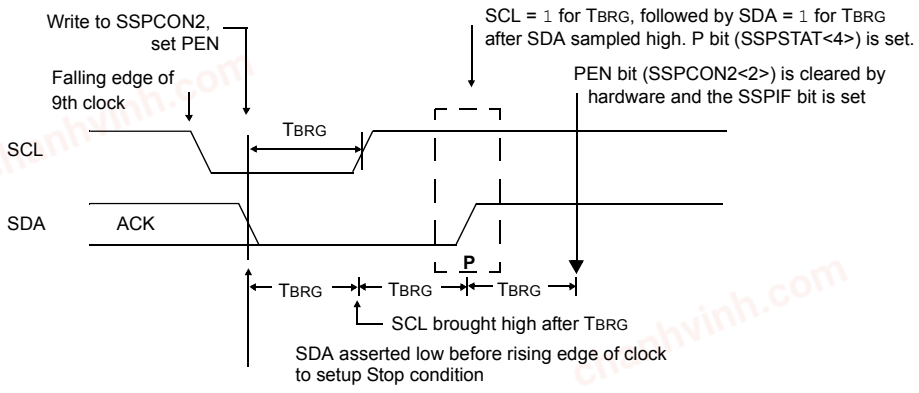


**Note:** TBRG = one Baud Rate Generator period.

 © 2013 Microchip Technology Inc.

chanhvinh.com



### 28.6.10 SLEEP OPERATION

While in Sleep mode, the I$^2$C slave module can receive addresses or data and when an address match or complete byte transfer occurs, wake the processor from Sleep (if the MSSP interrupt is enabled).

### 28.6.11 EFFECTS OF A RESET

A Reset disables the MSSP module and terminates the current transfer.

### 28.6.12 MULTI-MASTER MODE

In Multi-Master mode, the interrupt generation on the detection of the Start and Stop conditions allows the determination of when the bus is free. The Stop (P) and Start (S) bits are cleared from a Reset or when the MSSP module is disabled. Control of the I$^2$C bus may be taken when the P bit of the SSPSTAT register is set, or the bus is Idle, with both the S and P bits clear. When the bus is busy, enabling the SSP interrupt will generate the interrupt when the Stop condition occurs.

In multi-master operation, the SDA line must be monitored for arbitration to see if the signal level is the expected output level. This check is performed by hardware with the result placed in the BCLIF bit.

The states where arbitration can be lost are:

- Address Transfer
- Data Transfer
- A Start Condition
- A Repeated Start Condition
- An Acknowledge Condition

### 28.6.13 MULTI -MASTER COMMUNICATION, BUS COLLISION AND BUS ARBITRATION

Multi-Master mode support is achieved by bus arbitration. When the master outputs address/data bits onto the SDA pin, arbitration takes place when the master outputs a '1' on SDA, by letting SDA float high and another master asserts a '0'. When the SCL pin floats high, data should be stable. If the expected data on SDA is a '1' and the data sampled on the SDA pin is '0', then a bus collision has taken place. The master will set the Bus Collision Interrupt Flag, BCLIF and reset the I$^2$C port to its Idle state (Figure 28-32).

If a transmit was in progress when the bus collision occurred, the transmission is halted, the BF flag is cleared, the SDA and SCL lines are deasserted and the SSPBUF can be written to. When the user services the bus collision Interrupt Service Routine and if the I$^2$C bus is free, the user can resume communication by asserting a Start condition.

If a Start, Repeated Start, Stop or Acknowledge condition was in progress when the bus collision occurred, the condition is aborted, the SDA and SCL lines are deasserted and the respective control bits in the SSPCON2 register are cleared. When the user services the bus collision Interrupt Service Routine and if the I$^2$C bus is free, the user can resume communication by asserting a Start condition.

The master will continue to monitor the SDA and SCL pins. If a Stop condition occurs, the SSPIF bit will be set.

A write to the SSPBUF will start the transmission of data at the first data bit, regardless of where the transmitter left off when the bus collision occurred.

In Multi-Master mode, the interrupt generation on the detection of Start and Stop conditions allows the determination of when the bus is free. Control of the I$^2$C bus can be taken when the P bit is set in the SSPSTAT register, or the bus is Idle and the S and P bits are cleared.

**FIGURE 28-32: BUS COLLISION TIMING FOR TRANSMIT AND ACKNOWLEDGE**

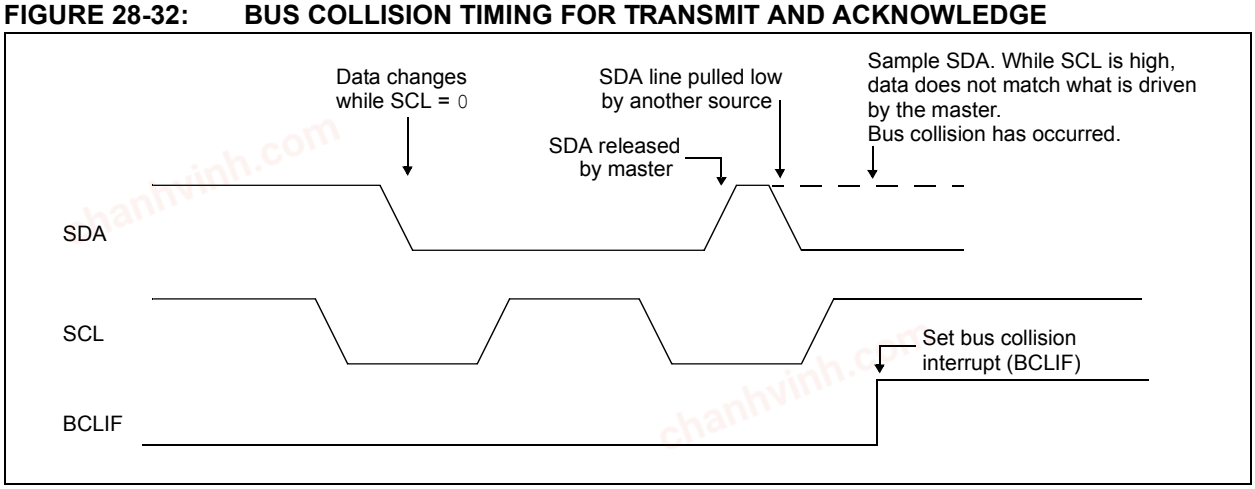

chanhvinh.com



#### 28.6.13.1 Bus Collision During a Start Condition

During a Start condition, a bus collision occurs if:

a) SDA or SCL are sampled low at the beginning of the Start condition (Figure 28-33).

b) SCL is sampled low before SDA is asserted low (Figure 28-34).

During a Start condition, both the SDA and the SCL pins are monitored.

If the SDA pin is already low, or the SCL pin is already low, then all of the following occur:

- the Start condition is aborted,
- the BCLIF flag is set and
- the MSSP module is reset to its Idle state (Figure 28-33).

The Start condition begins with the SDA and SCL pins deasserted. When the SDA pin is sampled high, the Baud Rate Generator is loaded and counts down. If the SCL pin is sampled low while SDA is high, a bus collision occurs because it is assumed that another master is attempting to drive a data '1' during the Start condition.

If the SDA pin is sampled low during this count, the BRG is reset and the SDA line is asserted early (Figure 28-35). If, however, a '1' is sampled on the SDA pin, the SDA pin is asserted low at the end of the BRG count. The Baud Rate Generator is then reloaded and counts down to zero; if the SCL pin is sampled as '0' during this time, a bus collision does not occur. At the end of the BRG count, the SCL pin is asserted low.

**Note:** The reason that bus collision is not a factor during a Start condition is that no two bus masters can assert a Start condition at the exact same time. Therefore, one master will always assert SDA before the other. This condition does not cause a bus collision because the two masters must be allowed to arbitrate the first address following the Start condition. If the address is the same, arbitration must be allowed to continue into the data portion, Repeated Start or Stop conditions.

**FIGURE 28-33: BUS COLLISION DURING START CONDITION (SDA ONLY)**

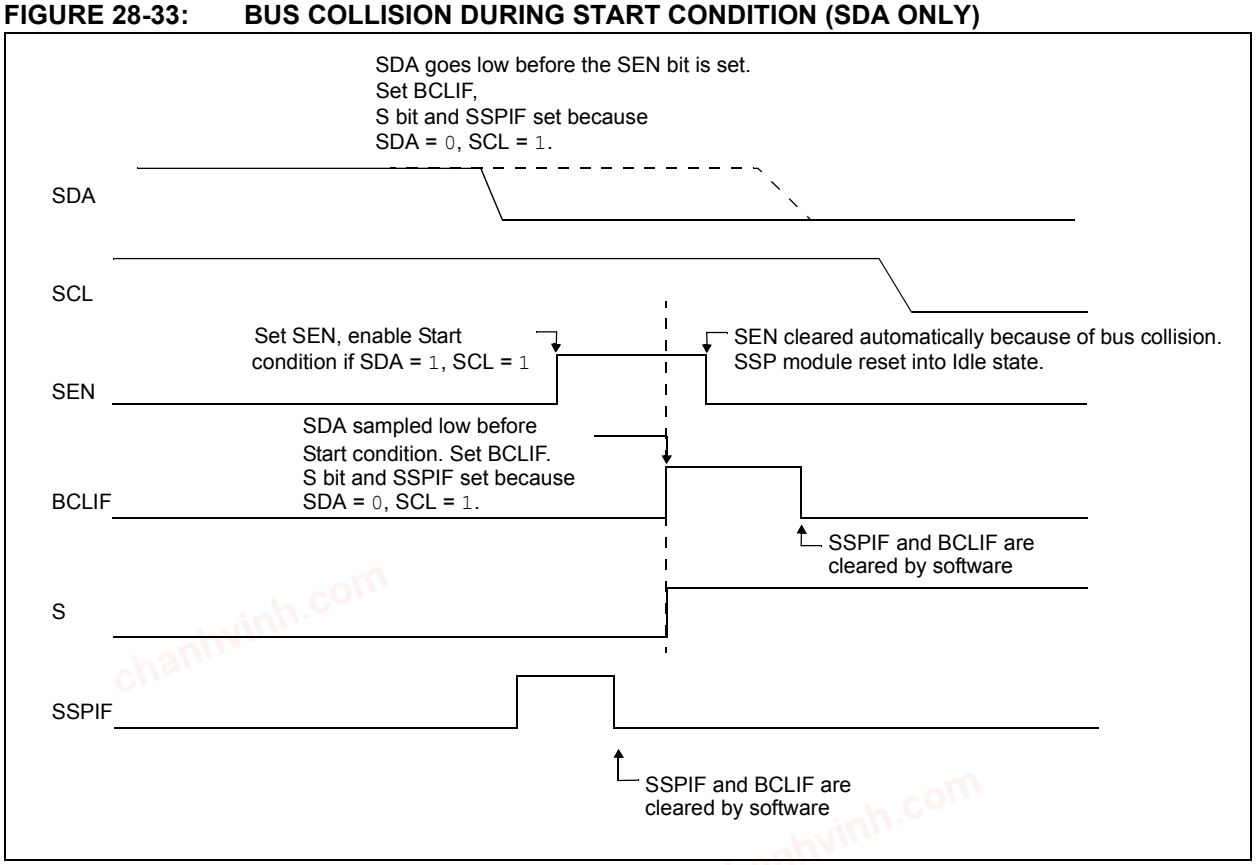


 © 2013 Microchip Technology Inc.

chanhvinh.com



**FIGURE 28-34: BUS COLLISION DURING START CONDITION (SCL = 0)**

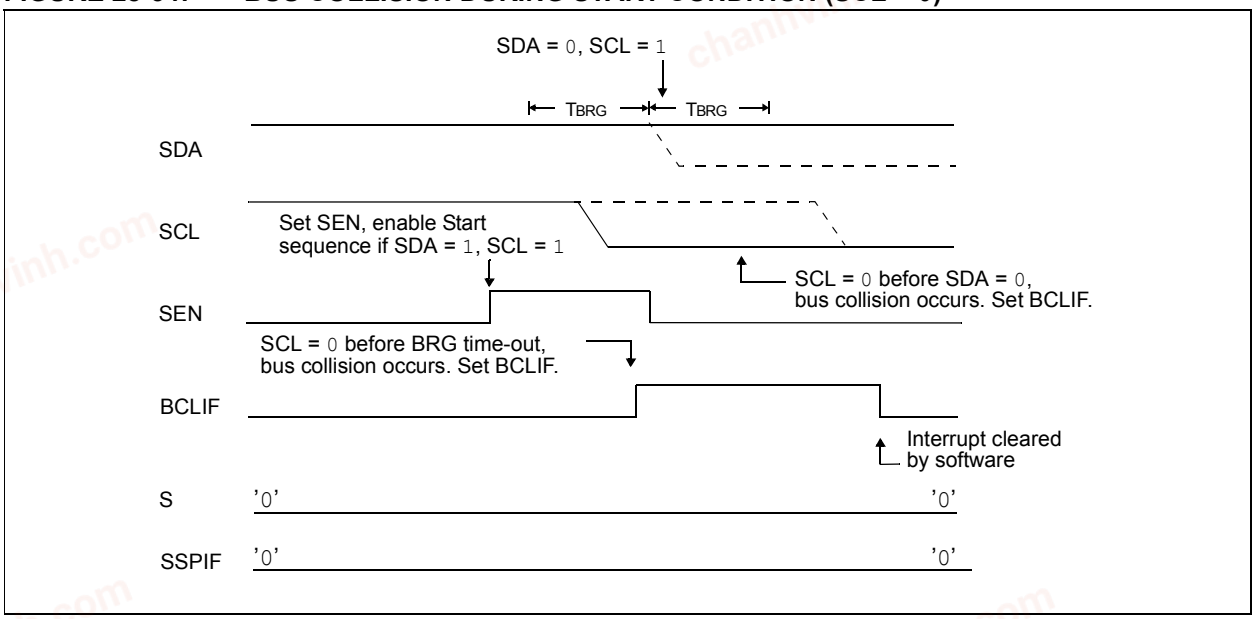


**FIGURE 28-35: BRG RESET DUE TO SDA ARBITRATION DURING START CONDITION**

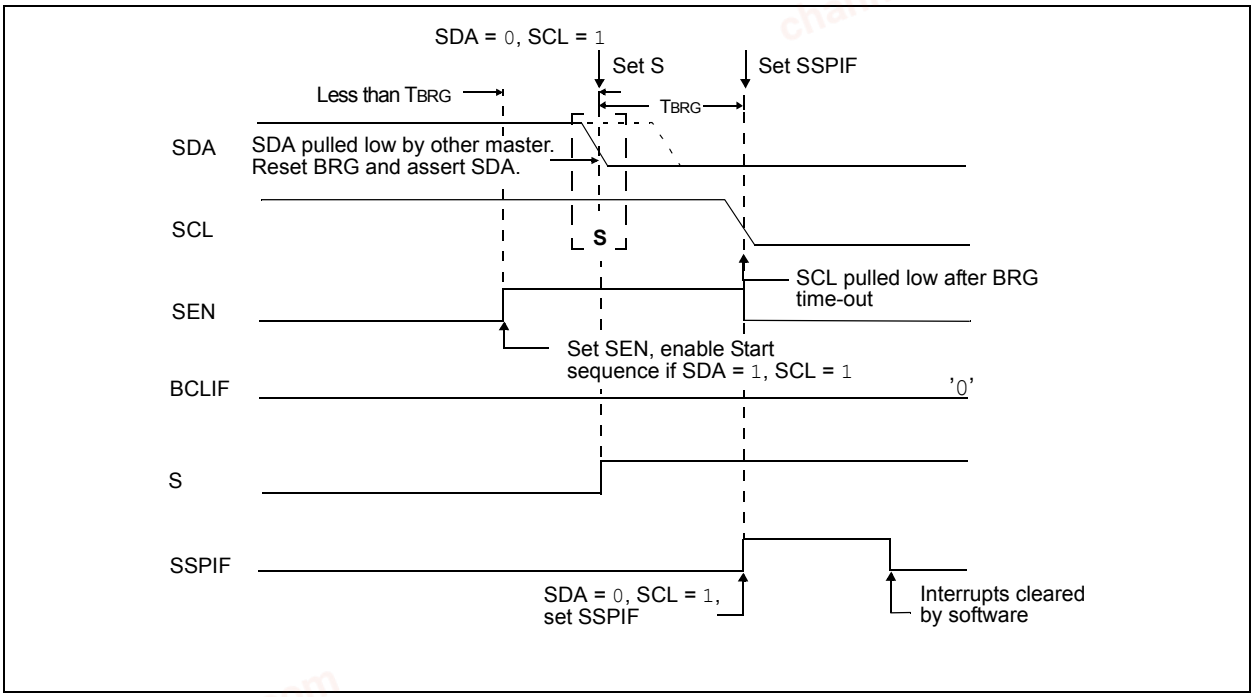

chanhvinh.com



### 28.6.13.2 Bus Collision During a Repeated Start Condition

During a Repeated Start condition, a bus collision occurs if:

a) A low level is sampled on SDA when SCL goes from low level to high level (Case 1).

b) SCL goes low before SDA is asserted low, indicating that another master is attempting to transmit a data '1' (Case 2).

When the user releases SDA and the pin is allowed to float high, the BRG is loaded with SSPADD and counts down to zero. The SCL pin is then deasserted and when sampled high, the SDA pin is sampled.

If SDA is low, a bus collision has occurred (i.e., another master is attempting to transmit a data '0', Figure 28-36). If SDA is sampled high, the BRG is reloaded and begins counting. If SDA goes from high-to-low before the BRG times out, no bus collision occurs because no two masters can assert SDA at exactly the same time.

If SCL goes from high-to-low before the BRG times out and SDA has not already been asserted, a bus collision occurs. In this case, another master is attempting to transmit a data '1' during the Repeated Start condition, see Figure 28-37.

If, at the end of the BRG time-out, both SCL and SDA are still high, the SDA pin is driven low and the BRG is reloaded and begins counting. At the end of the count, regardless of the status of the SCL pin, the SCL pin is driven low and the Repeated Start condition is complete.

**FIGURE 28-36: BUS COLLISION DURING A REPEATED START CONDITION (CASE 1)**

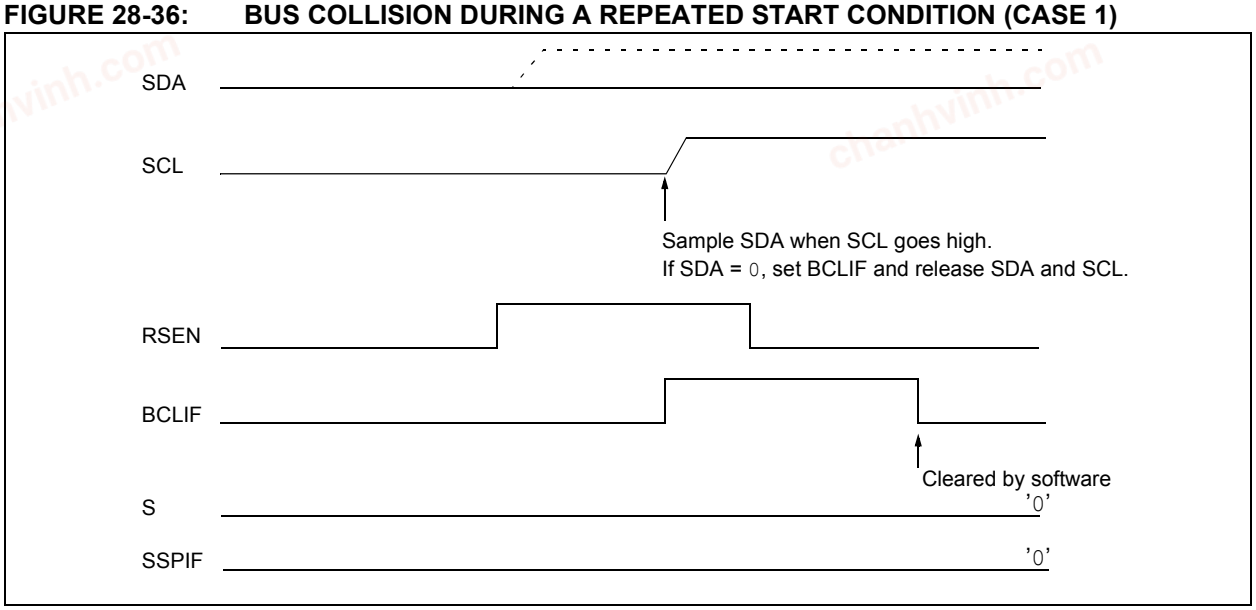


**FIGURE 28-37: BUS COLLISION DURING REPEATED START CONDITION (CASE 2)**

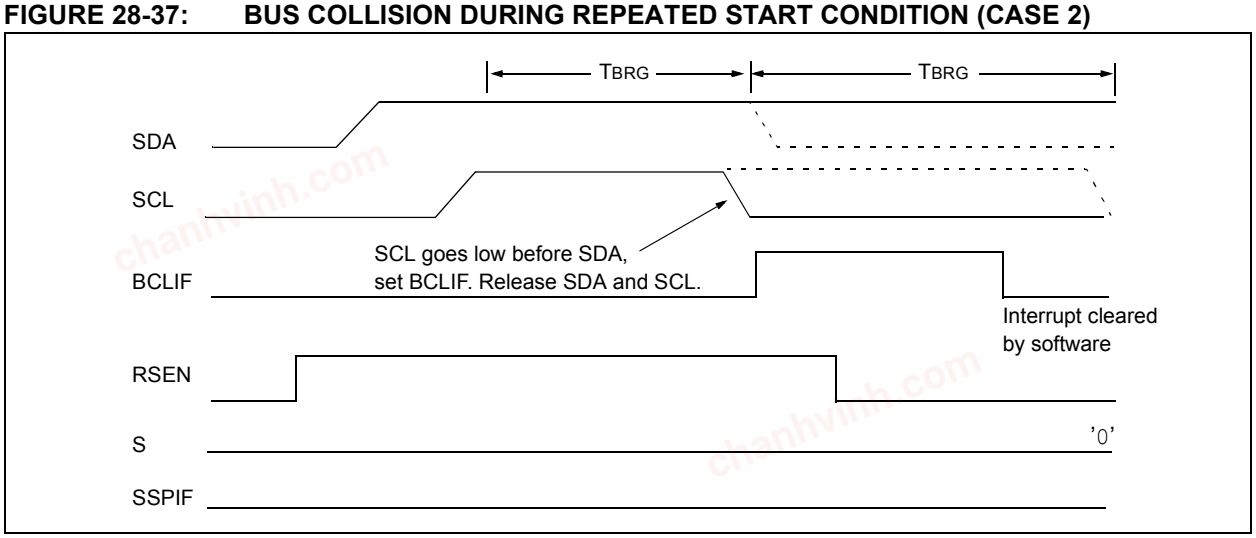


 © 2013 Microchip Technology Inc.

chanhvinh.com



### 28.6.13.3 Bus Collision During a Stop Condition

Bus collision occurs during a Stop condition if:

a) After the SDA pin has been deasserted and allowed to float high, SDA is sampled low after the BRG has timed out (Case 1).

b) After the SCL pin is deasserted, SCL is sampled low before SDA goes high (Case 2).

The Stop condition begins with SDA asserted low. When SDA is sampled low, the SCL pin is allowed to float. When the pin is sampled high (clock arbitration), the Baud Rate Generator is loaded with SSPADD and counts down to zero. After the BRG times out, SDA is sampled. If SDA is sampled low, a bus collision has occurred. This is due to another master attempting to drive a data '0' (Figure 28-38). If the SCL pin is sampled low before SDA is allowed to float high, a bus collision occurs. This is another case of another master attempting to drive a data '0' (Figure 28-39).

**FIGURE 28-38: BUS COLLISION DURING A STOP CONDITION (CASE 1)**

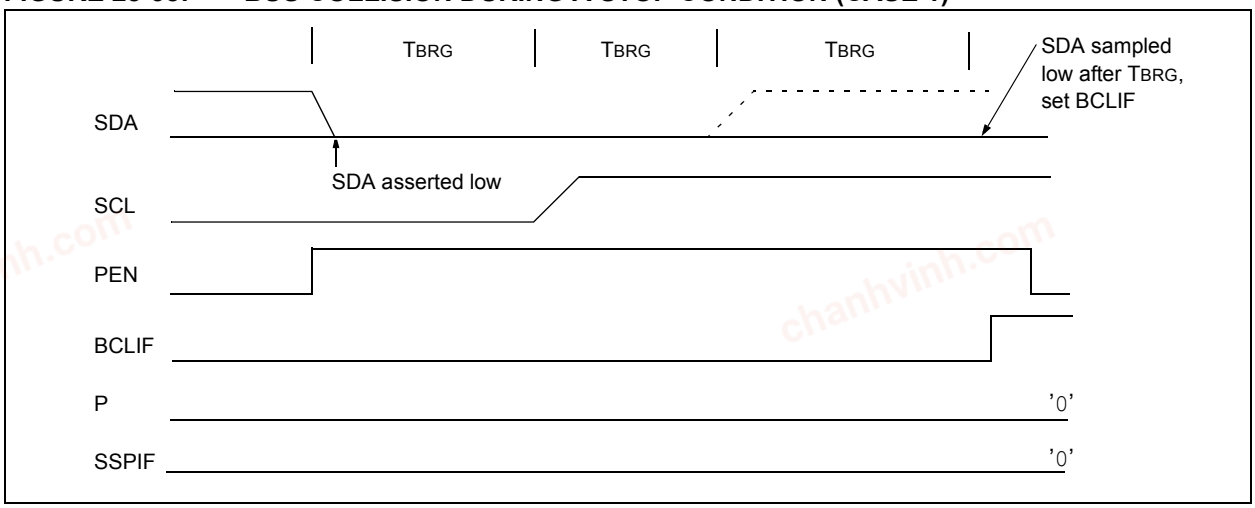


**FIGURE 28-39: BUS COLLISION DURING A STOP CONDITION (CASE 2)**

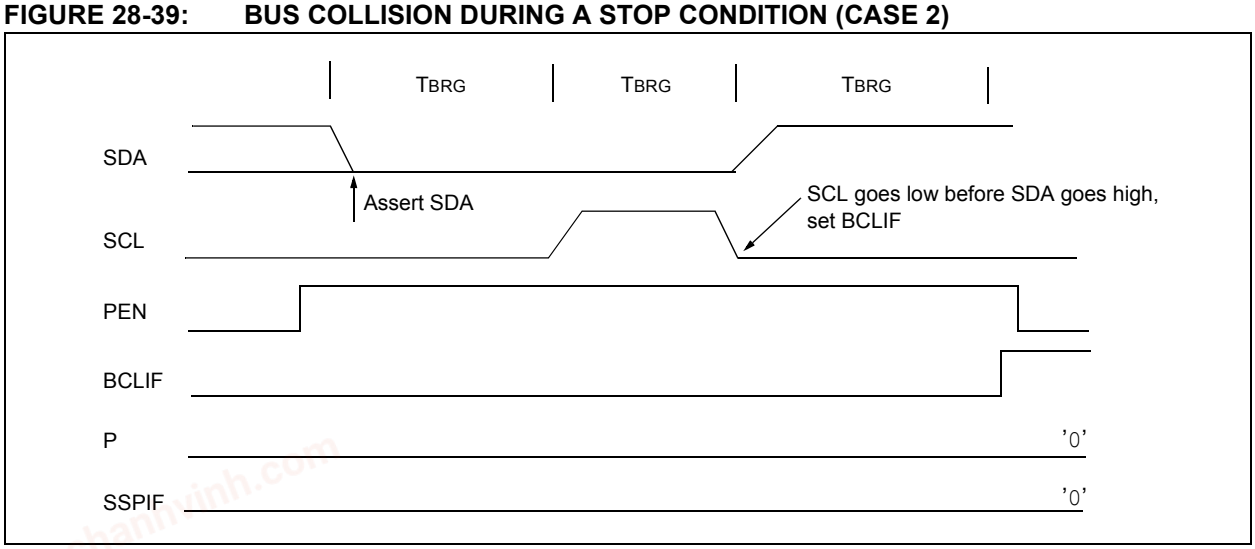

chanhvinh.com



**TABLE 28-3: SUMMARY OF REGISTERS ASSOCIATED WITH I²C™ OPERATION**

| Name | Bit 7 | Bit 6 | Bit 5 | Bit 4 | Bit 3 | Bit 2 | Bit 1 | Bit 0 | Reset Values on Page: |
|---|---|---|---|---|---|---|---|---|---|
| ANSELA | — | — | — | ANSA4 | — | ANSA2 | ANSA1 | ANSA0 | 125 |
| ANSELB(1) | — | — | ANSB5 | ANSB4 | — | — | — | — | 131 |
| ANSELC | ANSC7(1) | ANSC6(1) | ANSC5(2) | ANSC4(2) | ANSC3 | ANSC2 | ANSC1 | ANSC0 | 136 |
| INTCON | GIE | PEIE | TMR0IE | INTE | IOCIE | TMR0IF | INTF | IOCIF | 86 |
| PIE1 | TMR1GIE | ADIE | RCIE | TXIE | SSP1IE | CCP1IE | TMR2IE | TMR1IE | 87 |
| PIE2 | OSFIE | C2IE | C1IE | — | BCL1IE | TMR6IE | TMR4IE | CCP2IE | 88 |
| PIR1 | TMR1GIF | ADIF | RCIF | TXIF | SSP1IF | CCP1IF | TMR2IF | TMR1IF | 90 |
| PIR2 | OSFIF | C2IF | C1IF | — | BCL1IF | TMR6IF | TMR4IF | CCP2IF | 91 |
| RxyPPS | — | — | — | RxyPPS<4:0> | | | | | 143 |
| SSPCLKPPS | — | — | — | SSPCLKPPS<4:0> | | | | | 141, 142 |
| SSPDATPPS | — | — | — | SSPDATPPS<4:0> | | | | | 141, 142 |
| SSPSSPPS | — | — | — | SSPSSPPS<4:0> | | | | | 141, 142 |
| SSP1ADD | ADD<7:0> | | | | | | | | 335 |
| SSP1BUF | Synchronous Serial Port Receive Buffer/Transmit Register | | | | | | | | 285* |
| SSP1CON1 | WCOL | SSPOV | SSPEN | CKP | SSPM<3:0> | | | | 332 |
| SSP1CON2 | GCEN | ACKSTAT | ACKDT | ACKEN | RCEN | PEN | RSEN | SEN | 333 |
| SSP1CON3 | ACKTIM | PCIE | SCIE | BOEN | SDAHT | SBCDE | AHEN | DHEN | 334 |
| SSP1MSK | MSK<7:0> | | | | | | | | 335 |
| SSP1STAT | SMP | CKE | D/$\overline{A}$ | P | S | R/$\overline{W}$ | UA | BF | 330 |
| TRISA | — | — | TRISA5 | TRISA4 | —(3) | TRISA2 | TRISA1 | TRISA0 | 124 |
| TRISB(1) | TRISB7 | TRISB6 | TRISB5 | TRISB4 | — | — | — | — | 130 |
| TRISC | TRISC7(1) | TRISC6(1) | TRISC5 | TRISC4 | TRISC3 | TRISC2 | TRISC1 | TRISA0 | 135 |

**Legend:** — = unimplemented location, read as '0'. Shaded cells are not used by the MSSP module in I²C™ mode.
* Page provides register information.

**Note 1:** PIC16(L)F1708 only.
**2:** PIC16(L)F1704 only.
**3:** Unimplemented, read as '1'.

 © 2013 Microchip Technology Inc.

chanhvinh.com



## 28.7 BAUD RATE GENERATOR

The MSSP module has a Baud Rate Generator available for clock generation in both $I^2C$ and SPI Master modes. The Baud Rate Generator (BRG) reload value is placed in the SSPADD register (Register 28-6). When a write occurs to SSPBUF, the Baud Rate Generator will automatically begin counting down.

Once the given operation is complete, the internal clock will automatically stop counting and the clock pin will remain in its last state.

An internal signal “Reload” in Figure 28-40 triggers the value from SSPADD to be loaded into the BRG counter. This occurs twice for each oscillation of the module clock line. The logic dictating when the reload signal is asserted depends on the mode the MSSP is being operated in.

Table 28-4 demonstrates clock rates based on instruction cycles and the BRG value loaded into SSPADD.

**EQUATION 28-1:**

$$F_{CLOCK} = \frac{F_{OSC}}{(SSPxADD + 1)(4)}$$

**FIGURE 28-40: BAUD RATE GENERATOR BLOCK DIAGRAM**

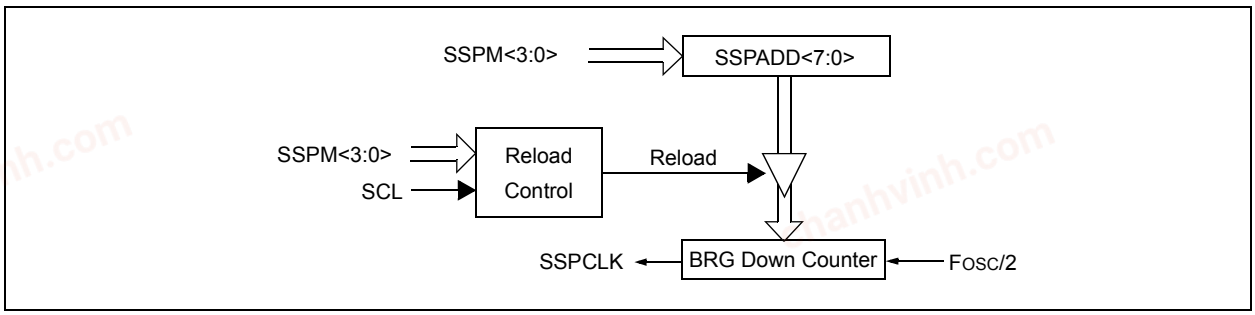


**Note:** Values of 0x00, 0x01 and 0x02 are not valid for SSPADD when used as a Baud Rate Generator for $I^2C$. This is an implementation limitation.

**TABLE 28-4: MSSP CLOCK RATE W/BRG**

| FOSC | FCY | BRG Value | FCLOCK (2 Rollovers of BRG) |
|---|---|---|---|
| 32 MHz | 8 MHz | 13h | 400 kHz |
| 32 MHz | 8 MHz | 19h | 308 kHz |
| 32 MHz | 8 MHz | 4Fh | 100 kHz |
| 16 MHz | 4 MHz | 09h | 400 kHz |
| 16 MHz | 4 MHz | 0Ch | 308 kHz |
| 16 MHz | 4 MHz | 27h | 100 kHz |
| 4 MHz | 1 MHz | 09h | 100 kHz |

**Note:** Refer to the I/O port electrical specifications in Table 32-4 to ensure the system is designed to support IOL requirements.

chanhvinh.com



## 28.8 Register Definitions: MSSP Control

### REGISTER 28-1: SSP1STAT: SSP STATUS REGISTER

| R/W-0/0 | R/W-0/0 | R-0/0 | R-0/0 | R-0/0 | R-0/0 | R-0/0 | R-0/0 |
|---|---|---|---|---|---|---|---|
| SMP | CKE | D/$\overline{A}$ | P | S | R/$\overline{W}$ | UA | BF |
| bit 7 | | | | | | | bit 0 |

| **Legend:** | | |
|---|---|---|
| R = Readable bit | W = Writable bit | U = Unimplemented bit, read as '0' |
| u = Bit is unchanged | x = Bit is unknown | -n/n = Value at POR and BOR/Value at all other Resets |
| '1' = Bit is set | '0' = Bit is cleared | |

bit 7 **SMP:** SPI Data Input Sample bit

SPI Master mode:
1 = Input data sampled at end of data output time
0 = Input data sampled at middle of data output time

SPI Slave mode:
SMP must be cleared when SPI is used in Slave mode

In $I^2C$ Master or Slave mode:
1 = Slew rate control disabled for Standard Speed mode (100 kHz and 1 MHz)
0 = Slew rate control enabled for High-Speed mode (400 kHz)

bit 6 **CKE:** SPI Clock Edge Select bit (SPI mode only)

In SPI Master or Slave mode:
1 = Transmit occurs on transition from active to Idle clock state
0 = Transmit occurs on transition from Idle to active clock state

In $I^2C$™ mode only:
1 = Enable input logic so that thresholds are compliant with SMBus specification
0 = Disable SMBus specific inputs

bit 5 **D/$\overline{A}$:** Data/$\overline{Address}$ bit ($I^2C$ mode only)
1 = Indicates that the last byte received or transmitted was data
0 = Indicates that the last byte received or transmitted was address

bit 4 **P:** Stop bit
($I^2C$ mode only. This bit is cleared when the MSSP module is disabled, SSPEN is cleared.)
1 = Indicates that a Stop bit has been detected last (this bit is '0' on Reset)
0 = Stop bit was not detected last

bit 3 **S:** Start bit
($I^2C$ mode only. This bit is cleared when the MSSP module is disabled, SSPEN is cleared.)
1 = Indicates that a Start bit has been detected last (this bit is '0' on Reset)
0 = Start bit was not detected last

bit 2 **R/$\overline{W}$:** Read/$\overline{Write}$ bit information ($I^2C$ mode only)
This bit holds the R/$\overline{W}$ bit information following the last address match. This bit is only valid from the address match to the next Start bit, Stop bit, or not ACK bit.
In $I^2C$ Slave mode:
1 = Read
0 = Write
In $I^2C$ Master mode:
1 = Transmit is in progress
0 = Transmit is not in progress
OR-ing this bit with SEN, RSEN, PEN, RCEN or ACKEN will indicate if the MSSP is in Idle mode.

bit 1 **UA:** Update Address bit (10-bit $I^2C$ mode only)
1 = Indicates that the user needs to update the address in the SSPADD register
0 = Address does not need to be updated

 © 2013 Microchip Technology Inc.

chanhvinh.com



**REGISTER 28-1: SSP1STAT: SSP STATUS REGISTER (CONTINUED)**

bit 0 **BF:** Buffer Full Status bit

Receive (SPI and $I^2C$ modes):
1 = Receive complete, SSPBUF is full
0 = Receive not complete, SSPBUF is empty

Transmit ($I^2C$ mode only):
1 = Data transmit in progress (does not include the $\overline{ACK}$ and Stop bits), SSPBUF is full
0 = Data transmit complete (does not include the $\overline{ACK}$ and Stop bits), SSPBUF is empty

chanhvinh.com



## REGISTER 28-2: SSP1CON1: SSP CONTROL REGISTER 1

| R/C/HS-0/0 | R/C/HS-0/0 | R/W-0/0 | R/W-0/0 | R/W-0/0 | R/W-0/0 | R/W-0/0 | R/W-0/0 |
|---|---|---|---|---|---|---|---|
| WCOL | SSPOV(1) | SSPEN | CKP | SSPM<3:0> | | | |
| bit 7 | | | | | | | bit 0 |

| Legend: | | | |
|---|---|---|---|
| R = Readable bit | W = Writable bit | U = Unimplemented bit, read as '0' | |
| u = Bit is unchanged | x = Bit is unknown | -n/n = Value at POR and BOR/Value at all other Resets | |
| '1' = Bit is set | '0' = Bit is cleared | HS = Bit is set by hardware | C = User cleared |

bit 7 **WCOL:** Write Collision Detect bit
Master mode:
1 = A write to the SSPBUF register was attempted while the I²C conditions were not valid for a transmission to be started
0 = No collision
Slave mode:
1 = The SSPBUF register is written while it is still transmitting the previous word (must be cleared in software)
0 = No collision

bit 6 **SSPOV:** Receive Overflow Indicator bit(1)
In SPI mode:
1 = A new byte is received while the SSPBUF register is still holding the previous data. In case of overflow, the data in SSPSR is lost. Overflow can only occur in Slave mode. In Slave mode, the user must read the SSPBUF, even if only transmitting data, to avoid setting overflow. In Master mode, the overflow bit is not set since each new reception (and transmission) is initiated by writing to the SSPBUF register (must be cleared in software).
0 = No overflow
In I²C mode:
1 = A byte is received while the SSPBUF register is still holding the previous byte. SSPOV is a "don't care" in Transmit mode (must be cleared in software).
0 = No overflow

bit 5 **SSPEN:** Synchronous Serial Port Enable bit
In both modes, when enabled, these pins must be properly configured as input or output
In SPI mode:
1 = Enables serial port and configures SCK, SDO, SDI and $\overline{SS}$ as the source of the serial port pins(2)
0 = Disables serial port and configures these pins as I/O port pins
In I²C mode:
1 = Enables the serial port and configures the SDA and SCL pins as the source of the serial port pins(3)
0 = Disables serial port and configures these pins as I/O port pins

bit 4 **CKP:** Clock Polarity Select bit
In SPI mode:
1 = Idle state for clock is a high level
0 = Idle state for clock is a low level
In I²C Slave mode:
SCL release control
1 = Enable clock
0 = Holds clock low (clock stretch). (Used to ensure data setup time.)
In I²C Master mode:
Unused in this mode

bit 3-0 **SSPM<3:0>:** Synchronous Serial Port Mode Select bits
1111 = I²C Slave mode, 10-bit address with Start and Stop bit interrupts enabled
1110 = I²C Slave mode, 7-bit address with Start and Stop bit interrupts enabled
1101 = Reserved
1100 = Reserved
1011 = I²C firmware controlled Master mode (slave idle)
1010 = SPI Master mode, clock = FOSC/(4 * (SSPADD+1))(5)
1001 = Reserved
1000 = I²C Master mode, clock = FOSC / (4 * (SSPADD+1))(4)
0111 = I²C Slave mode, 10-bit address
0110 = I²C Slave mode, 7-bit address
0101 = SPI Slave mode, clock = SCK pin, $\overline{SS}$ pin control disabled, $\overline{SS}$ can be used as I/O pin
0100 = SPI Slave mode, clock = SCK pin, $\overline{SS}$ pin control enabled
0011 = SPI Master mode, clock = T2_match/2
0010 = SPI Master mode, clock = FOSC/64
0001 = SPI Master mode, clock = FOSC/16
0000 = SPI Master mode, clock = FOSC/4

**Note 1:** In Master mode, the overflow bit is not set since each new reception (and transmission) is initiated by writing to the SSPBUF register.
**2:** When enabled, these pins must be properly configured as input or output. Use SSPSSPPS, SSPCLKPPS, SSPDATPPS, and RxyPPS to select the pins.
**3:** When enabled, the SDA and SCL pins must be configured as inputs. Use SSPCLKPPS, SSPDATPPS, and RxyPPS to select the pins.
**4:** SSPADD values of 0, 1 or 2 are not supported for I²C mode.
**5:** SSPADD value of '0' is not supported. Use SSPM = 0000 instead.

 © 2013 Microchip Technology Inc.

chanhvinh.com



**REGISTER 28-3: SSP1CON2: SSP CONTROL REGISTER 2(1)**

| R/W-0/0 | R-0/0 | R/W-0/0 | R/S/HS-0/0 | R/S/HS-0/0 | R/S/HS-0/0 | R/S/HS-0/0 | R/W/HS-0/0 |
|---|---|---|---|---|---|---|---|
| GCEN | ACKSTAT | ACKDT | ACKEN | RCEN | PEN | RSEN | SEN |
| bit 7 | | | | | | | bit 0 |

| **Legend:** | | |
|---|---|---|
| R = Readable bit | W = Writable bit | U = Unimplemented bit, read as '0' |
| u = Bit is unchanged | x = Bit is unknown | -n/n = Value at POR and BOR/Value at all other Resets |
| '1' = Bit is set | '0' = Bit is cleared | HC = Cleared by hardware S = User set |

bit 7 **GCEN:** General Call Enable bit (in $I^2C$ Slave mode only)
1 = Enable interrupt when a general call address (0x00 or 00h) is received in the SSPSR
0 = General call address disabled

bit 6 **ACKSTAT:** Acknowledge Status bit (in $I^2C$ mode only)
1 = Acknowledge was not received
0 = Acknowledge was received

bit 5 **ACKDT:** Acknowledge Data bit (in $I^2C$ mode only)
In Receive mode:
Value transmitted when the user initiates an Acknowledge sequence at the end of a receive
1 = Not Acknowledge
0 = Acknowledge

bit 4 **ACKEN:** Acknowledge Sequence Enable bit (in $I^2C$ Master mode only)
In Master Receive mode:
1 = Initiate Acknowledge sequence on SDA and SCL pins, and transmit ACKDT data bit. Automatically cleared by hardware.
0 = Acknowledge sequence idle

bit 3 **RCEN:** Receive Enable bit (in $I^2C$ Master mode only)
1 = Enables Receive mode for $I^2C$
0 = Receive idle

bit 2 **PEN:** Stop Condition Enable bit (in $I^2C$ Master mode only)
SCKMSSP Release Control:
1 = Initiate Stop condition on SDA and SCL pins. Automatically cleared by hardware.
0 = Stop condition Idle

bit 1 **RSEN:** Repeated Start Condition Enable bit (in $I^2C$ Master mode only)
1 = Initiate Repeated Start condition on SDA and SCL pins. Automatically cleared by hardware.
0 = Repeated Start condition Idle

bit 0 **SEN:** Start Condition Enable/Stretch Enable bit
In Master mode:
1 = Initiate Start condition on SDA and SCL pins. Automatically cleared by hardware.
0 = Start condition Idle
In Slave mode:
1 = Clock stretching is enabled for both slave transmit and slave receive (stretch enabled)
0 = Clock stretching is disabled

**Note 1:** For bits ACKEN, RCEN, PEN, RSEN, SEN: If the $I^2C$ module is not in the Idle mode, this bit may not be set (no spooling) and the SSPBUF may not be written (or writes to the SSPBUF are disabled).

chanhvinh.com



**REGISTER 28-4: SSP1CON3: SSP CONTROL REGISTER 3**

| R-0/0 | R/W-0/0 | R/W-0/0 | R/W-0/0 | R/W-0/0 | R/W-0/0 | R/W-0/0 | R/W-0/0 |
|---|---|---|---|---|---|---|---|
| ACKTIM(3) | PCIE | SCIE | BOEN | SDAHT | SBCDE | AHEN | DHEN |
| bit 7 | | | | | | | bit 0 |

| **Legend:** | | |
|---|---|---|
| R = Readable bit | W = Writable bit | U = Unimplemented bit, read as '0' |
| u = Bit is unchanged | x = Bit is unknown | -n/n = Value at POR and BOR/Value at all other Resets |
| '1' = Bit is set | '0' = Bit is cleared | |

bit 7 **ACKTIM:** Acknowledge Time Status bit ($I^2C$ mode only)(3)
1 = Indicates the $I^2C$ bus is in an Acknowledge sequence, set on eighth falling edge of SCL clock
0 = Not an Acknowledge sequence, cleared on $9^{TH}$ rising edge of SCL clock

bit 6 **PCIE**: Stop Condition Interrupt Enable bit ($I^2C$ mode only)
1 = Enable interrupt on detection of Stop condition
0 = Stop detection interrupts are disabled(2)

bit 5 **SCIE**: Start Condition Interrupt Enable bit ($I^2C$ mode only)
1 = Enable interrupt on detection of Start or Restart conditions
0 = Start detection interrupts are disabled(2)

bit 4 **BOEN:** Buffer Overwrite Enable bit
In SPI Slave mode:(1)
1 = SSPBUF updates every time that a new data byte is shifted in ignoring the BF bit
0 = If new byte is received with BF bit of the SSPSTAT register already set, SSPOV bit of the SSPCON1 register is set, and the buffer is not updated
In $I^2C$ Master mode and SPI Master mode:
This bit is ignored.
In $I^2C$ Slave mode:
1 = SSPBUF is updated and $\overline{ACK}$ is generated for a received address/data byte, ignoring the state of the SSPOV bit only if the BF bit = 0.
0 = SSPBUF is only updated when SSPOV is clear

bit 3 **SDAHT:** SDA Hold Time Selection bit ($I^2C$ mode only)
1 = Minimum of 300 ns hold time on SDA after the falling edge of SCL
0 = Minimum of 100 ns hold time on SDA after the falling edge of SCL

bit 2 **SBCDE:** Slave Mode Bus Collision Detect Enable bit ($I^2C$ Slave mode only)
If, on the rising edge of SCL, SDA is sampled low when the module is outputting a high state, the BCL1IF bit of the PIR2 register is set, and bus goes idle
1 = Enable slave bus collision interrupts
0 = Slave bus collision interrupts are disabled

bit 1 **AHEN:** Address Hold Enable bit ($I^2C$ Slave mode only)
1 = Following the eighth falling edge of SCL for a matching received address byte; CKP bit of the SSPCON1 register will be cleared and the SCL will be held low.
0 = Address holding is disabled

bit 0 **DHEN:** Data Hold Enable bit ($I^2C$ Slave mode only)
1 = Following the eighth falling edge of SCL for a received data byte; slave hardware clears the CKP bit of the SSPCON1 register and SCL is held low.
0 = Data holding is disabled

**Note 1:** For daisy-chained SPI operation; allows the user to ignore all but the last received byte. SSPOV is still set when a new byte is received and BF = 1, but hardware continues to write the most recent byte to SSPBUF.
**2:** This bit has no effect in Slave modes that Start and Stop condition detection is explicitly listed as enabled.
**3:** The ACKTIM Status bit is only active when the AHEN bit or DHEN bit is set.

 © 2013 Microchip Technology Inc.

chanhvinh.com



**REGISTER 28-5: SSP1MSK: SSP MASK REGISTER**

| R/W-1/1 | R/W-1/1 | R/W-1/1 | R/W-1/1 | R/W-1/1 | R/W-1/1 | R/W-1/1 | R/W-1/1 |
|---|---|---|---|---|---|---|---|
| MSK<7:0> | | | | | | | |
| bit 7 | | | | | | | bit 0 |

| **Legend:** | | |
|---|---|---|
| R = Readable bit | W = Writable bit | U = Unimplemented bit, read as '0' |
| u = Bit is unchanged | x = Bit is unknown | -n/n = Value at POR and BOR/Value at all other Resets |
| '1' = Bit is set | '0' = Bit is cleared | |

bit 7-1 **MSK<7:1>:** Mask bits
1 = The received address bit n is compared to SSPADD<n> to detect I²C address match
0 = The received address bit n is not used to detect I²C address match

bit 0 **MSK<0>:** Mask bit for I²C Slave mode, 10-bit Address
I²C Slave mode, 10-bit address (SSPM<3:0> = 0111 or 1111):
1 = The received address bit 0 is compared to SSPADD<0> to detect I²C address match
0 = The received address bit 0 is not used to detect I²C address match
I²C Slave mode, 7-bit address, the bit is ignored

**REGISTER 28-6: SSP1ADD: MSSP ADDRESS AND BAUD RATE REGISTER (I²C MODE)**

| R/W-0/0 | R/W-0/0 | R/W-0/0 | R/W-0/0 | R/W-0/0 | R/W-0/0 | R/W-0/0 | R/W-0/0 |
|---|---|---|---|---|---|---|---|
| ADD<7:0> | | | | | | | |
| bit 7 | | | | | | | bit 0 |

| **Legend:** | | |
|---|---|---|
| R = Readable bit | W = Writable bit | U = Unimplemented bit, read as '0' |
| u = Bit is unchanged | x = Bit is unknown | -n/n = Value at POR and BOR/Value at all other Resets |
| '1' = Bit is set | '0' = Bit is cleared | |

**Master mode:**

bit 7-0 **ADD<7:0>:** Baud Rate Clock Divider bits
SCL pin clock period = ((ADD<7:0> + 1) *4)/FOSC

**10-Bit Slave mode – Most Significant Address Byte:**

bit 7-3 **Not used:** Unused for Most Significant Address Byte. Bit state of this register is a "don't care". Bit pattern sent by master is fixed by I²C specification and must be equal to '11110'. However, those bits are compared by hardware and are not affected by the value in this register.

bit 2-1 **ADD<2:1>:** Two Most Significant bits of 10-bit address

bit 0 **Not used:** Unused in this mode. Bit state is a "don't care".

**10-Bit Slave mode – Least Significant Address Byte:**

bit 7-0 **ADD<7:0>:** Eight Least Significant bits of 10-bit address

**7-Bit Slave mode:**

bit 7-1 **ADD<7:1>:** 7-bit address

bit 0 **Not used:** Unused in this mode. Bit state is a "don't care".

chanhvinh.com



**NOTES:**

chanhvinh.com

 © 2013 Microchip Technology Inc.

chanhvinh.com



## 29.0 ENHANCED UNIVERSAL SYNCHRONOUS ASYNCHRONOUS RECEIVER TRANSMITTER (EUSART)

The Enhanced Universal Synchronous Asynchronous Receiver Transmitter (EUSART) module is a serial I/O communications peripheral. It contains all the clock generators, shift registers and data buffers necessary to perform an input or output serial data transfer independent of device program execution. The EUSART, also known as a Serial Communications Interface (SCI), can be configured as a full-duplex asynchronous system or half-duplex synchronous system. Full-Duplex mode is useful for communications with peripheral systems, such as CRT terminals and personal computers. Half-Duplex Synchronous mode is intended for communications with peripheral devices, such as A/D or D/A integrated circuits, serial EEPROMs or other microcontrollers. These devices typically do not have internal clocks for baud rate generation and require the external clock signal provided by a master synchronous device.

The EUSART module includes the following capabilities:

- Full-duplex asynchronous transmit and receive
- Two-character input buffer
- One-character output buffer
- Programmable 8-bit or 9-bit character length
- Address detection in 9-bit mode
- Input buffer overrun error detection
- Received character framing error detection
- Half-duplex synchronous master
- Half-duplex synchronous slave
- Programmable clock polarity in synchronous modes
- Sleep operation

The EUSART module implements the following additional features, making it ideally suited for use in Local Interconnect Network (LIN) bus systems:

- Automatic detection and calibration of the baud rate
- Wake-up on Break reception
- 13-bit Break character transmit

Block diagrams of the EUSART transmitter and receiver are shown in Figure 29-1 and Figure 29-2.

The EUSART transmit output (TX_out) is available to the TX/CK pin and internally to the following peripherals:

- Configurable Logic Cell (CLC)

**FIGURE 29-1: EUSART TRANSMIT BLOCK DIAGRAM**

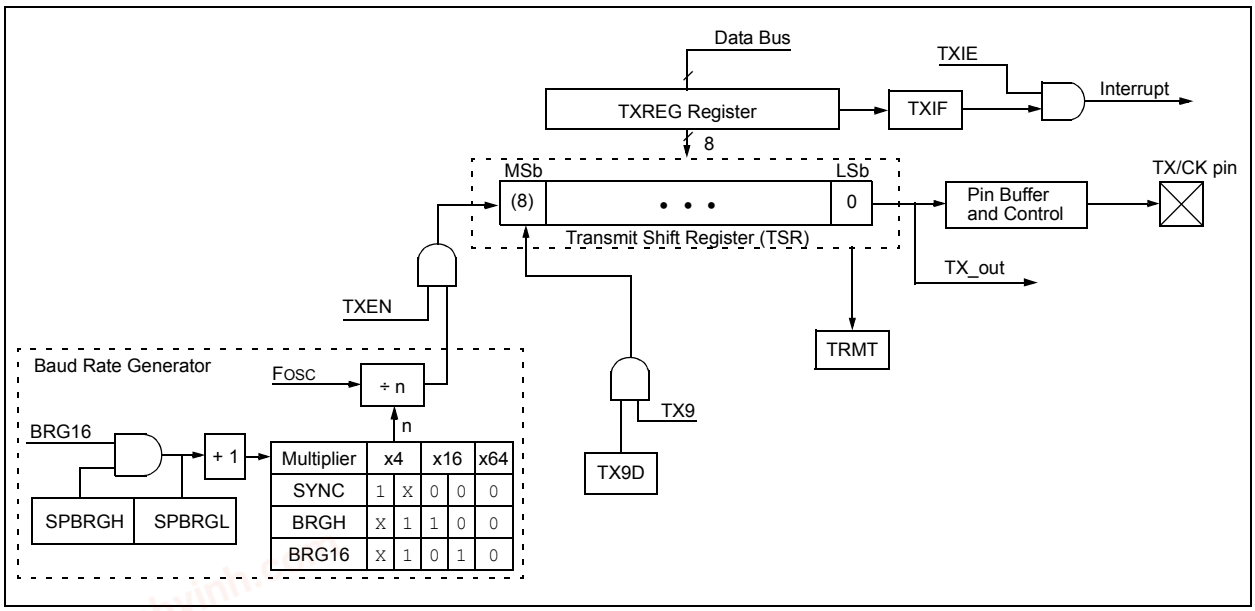

chanhvinh.com



**FIGURE 29-2: EUSART RECEIVE BLOCK DIAGRAM**

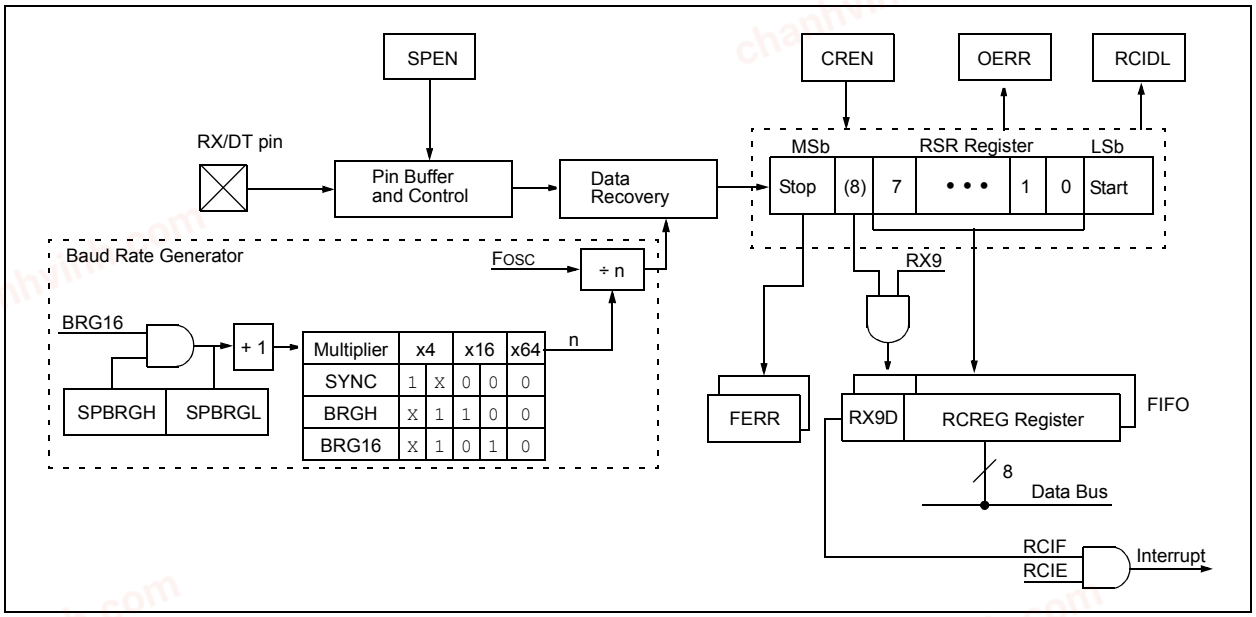


The operation of the EUSART module is controlled through three registers:

- Transmit Status and Control (TXSTA)
- Receive Status and Control (RCSTA)
- Baud Rate Control (BAUDCON)

These registers are detailed in Register 29-1, Register 29-2 and Register 29-3, respectively.

The RX and CK input pins are selected with the RXPPS and CKPPS registers, respectively. TX, CK, and DT output pins are selected with each pin's RxyPPS register. Since the RX input is coupled with the DT output in Synchronous mode, it is the user's responsibility to select the same pin for both of these functions when operating in Synchronous mode. The EUSART control logic will control the data direction drivers automatically.

 © 2013 Microchip Technology Inc.

chanhvinh.com



## 29.1 EUSART Asynchronous Mode

The EUSART transmits and receives data using the standard non-return-to-zero (NRZ) format. NRZ is implemented with two levels: a VOH mark state which represents a '1' data bit, and a VOL space state which represents a '0' data bit. NRZ refers to the fact that consecutively transmitted data bits of the same value stay at the output level of that bit without returning to a neutral level between each bit transmission. An NRZ transmission port idles in the Mark state. Each character transmission consists of one Start bit followed by eight or nine data bits and is always terminated by one or more Stop bits. The Start bit is always a space and the Stop bits are always marks. The most common data format is eight bits. Each transmitted bit persists for a period of 1/(Baud Rate). An on-chip dedicated 8-bit/16-bit Baud Rate Generator is used to derive standard baud rate frequencies from the system oscillator. See Table 29-5 for examples of baud rate configurations.

The EUSART transmits and receives the LSb first. The EUSART's transmitter and receiver are functionally independent, but share the same data format and baud rate. Parity is not supported by the hardware, but can be implemented in software and stored as the ninth data bit.

### 29.1.1 EUSART ASYNCHRONOUS TRANSMITTER

The EUSART transmitter block diagram is shown in Figure 29-1. The heart of the transmitter is the serial Transmit Shift Register (TSR), which is not directly accessible by software. The TSR obtains its data from the transmit buffer, which is the TXREG register.

#### 29.1.1.1 Enabling the Transmitter

The EUSART transmitter is enabled for asynchronous operations by configuring the following three control bits:

- TXEN = 1
- SYNC = 0
- SPEN = 1

All other EUSART control bits are assumed to be in their default state.

Setting the TXEN bit of the TXSTA register enables the transmitter circuitry of the EUSART. Clearing the SYNC bit of the TXSTA register configures the EUSART for asynchronous operation. Setting the SPEN bit of the RCSTA register enables the EUSART and automatically configures the TX/CK I/O pin as an output. If the TX/CK pin is shared with an analog peripheral, the analog I/O function must be disabled by clearing the corresponding ANSEL bit.

| **Note:** | The TXIF Transmitter Interrupt flag is set when the TXEN enable bit is set. |
|---|---|

#### 29.1.1.2 Transmitting Data

A transmission is initiated by writing a character to the TXREG register. If this is the first character, or the previous character has been completely flushed from the TSR, the data in the TXREG is immediately transferred to the TSR register. If the TSR still contains all or part of a previous character, the new character data is held in the TXREG until the Stop bit of the previous character has been transmitted. The pending character in the TXREG is then transferred to the TSR in one TCY immediately following the Stop bit transmission. The transmission of the Start bit, data bits and Stop bit sequence commences immediately following the transfer of the data to the TSR from the TXREG.

#### 29.1.1.3 Transmit Data Polarity

The polarity of the transmit data can be controlled with the SCKP bit of the BAUDCON register. The default state of this bit is '0' which selects high true transmit idle and data bits. Setting the SCKP bit to '1' will invert the transmit data resulting in low true idle and data bits. The SCKP bit controls transmit data polarity in Asynchronous mode only. In Synchronous mode, the SCKP bit has a different function. See **Section 29.5.1.2 "Clock Polarity"**.

#### 29.1.1.4 Transmit Interrupt Flag

The TXIF interrupt flag bit of the PIR1 register is set whenever the EUSART transmitter is enabled and no character is being held for transmission in the TXREG. In other words, the TXIF bit is only clear when the TSR is busy with a character and a new character has been queued for transmission in the TXREG. The TXIF flag bit is not cleared immediately upon writing TXREG. TXIF becomes valid in the second instruction cycle following the write execution. Polling TXIF immediately following the TXREG write will return invalid results. The TXIF bit is read-only, it cannot be set or cleared by software.

The TXIF interrupt can be enabled by setting the TXIE interrupt enable bit of the PIE1 register. However, the TXIF flag bit will be set whenever the TXREG is empty, regardless of the state of TXIE enable bit.

To use interrupts when transmitting data, set the TXIE bit only when there is more data to send. Clear the TXIE interrupt enable bit upon writing the last character of the transmission to the TXREG.

chanhvinh.com



#### 29.1.1.5 TSR Status

The TRMT bit of the TXSTA register indicates the status of the TSR register. This is a read-only bit. The TRMT bit is set when the TSR register is empty and is cleared when a character is transferred to the TSR register from the TXREG. The TRMT bit remains clear until all bits have been shifted out of the TSR register. No interrupt logic is tied to this bit, so the user has to poll this bit to determine the TSR status.

| **Note:** | The TSR register is not mapped in data memory, so it is not available to the user. |
|---|---|

#### 29.1.1.6 Transmitting 9-Bit Characters

The EUSART supports 9-bit character transmissions. When the TX9 bit of the TXSTA register is set, the EUSART will shift nine bits out for each character transmitted. The TX9D bit of the TXSTA register is the ninth, and Most Significant data bit. When transmitting 9-bit data, the TX9D data bit must be written before writing the eight Least Significant bits into the TXREG. All nine bits of data will be transferred to the TSR shift register immediately after the TXREG is written.

A special 9-bit Address mode is available for use with multiple receivers. See **Section 29.1.2.7 "Address Detection"** for more information on the Address mode.

#### 29.1.1.7 Asynchronous Transmission Set-up:

1. Initialize the SPBRGH, SPBRGL register pair and the BRGH and BRG16 bits to achieve the desired baud rate (see **Section 29.4 "EUSART Baud Rate Generator (BRG)"**).
2. Enable the asynchronous serial port by clearing the SYNC bit and setting the SPEN bit.
3. If 9-bit transmission is desired, set the TX9 control bit. A set ninth data bit will indicate that the eight Least Significant data bits are an address when the receiver is set for address detection.
4. Set SCKP bit if inverted transmit is desired.
5. Enable the transmission by setting the TXEN control bit. This will cause the TXIF interrupt bit to be set.
6. If interrupts are desired, set the TXIE interrupt enable bit of the PIE1 register. An interrupt will occur immediately provided that the GIE and PEIE bits of the INTCON register are also set.
7. If 9-bit transmission is selected, the ninth bit should be loaded into the TX9D data bit.
8. Load 8-bit data into the TXREG register. This will start the transmission.

**FIGURE 29-3: ASYNCHRONOUS TRANSMISSION**

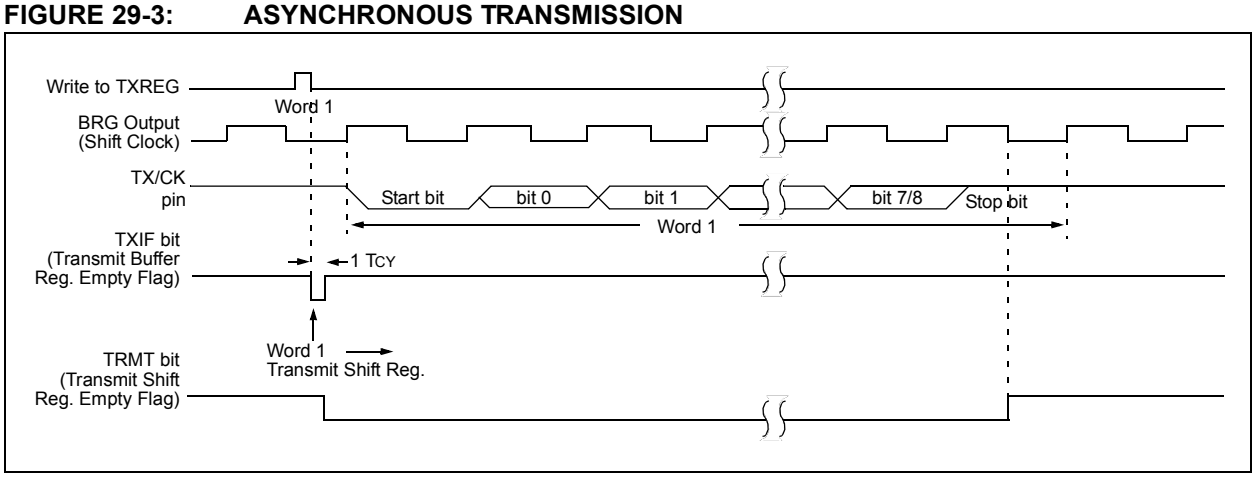


 © 2013 Microchip Technology Inc.

chanhvinh.com



**FIGURE 29-4: ASYNCHRONOUS TRANSMISSION (BACK-TO-BACK)**

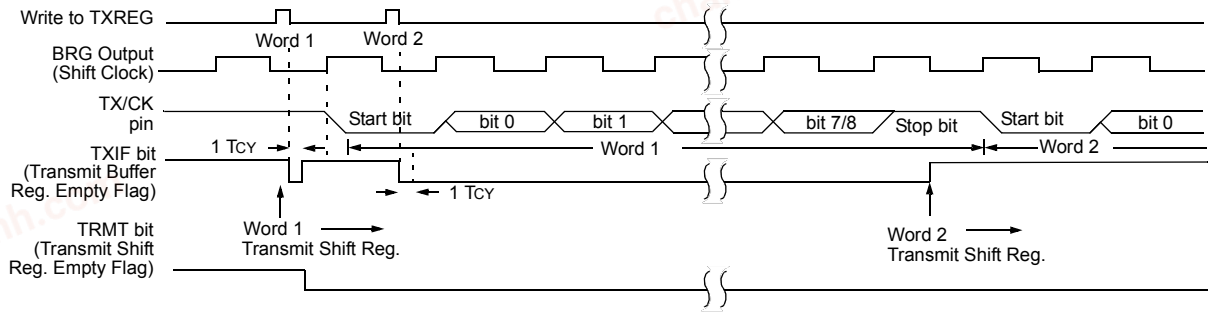


**Note:** This timing diagram shows two consecutive transmissions.

**TABLE 29-1: SUMMARY OF REGISTERS ASSOCIATED WITH ASYNCHRONOUS TRANSMISSION**

| Name | Bit 7 | Bit 6 | Bit 5 | Bit 4 | Bit 3 | Bit 2 | Bit 1 | Bit 0 | Register on Page |
|---|---|---|---|---|---|---|---|---|---|
| ANSELA | — | — | — | ANSA4 | — | ANSA2 | ANSA1 | ANSA0 | 125 |
| ANSELB(1) | — | — | ANSB5 | ANSB4 | — | — | — | — | 131 |
| ANSELC | ANSC7(1) | ANSC6(1) | ANSC5(2) | ANSC4(2) | ANSC3 | ANSC2 | ANSC1 | ANSC0 | 136 |
| BAUD1CON | ABDOVF | RCIDL | — | SCKP | BRG16 | — | WUE | ABDEN | 349 |
| INTCON | GIE | PEIE | TMR0IE | INTE | IOCIE | TMR0IF | INTF | IOCIF | 86 |
| PIE1 | TMR1GIE | ADIE | RCIE | TXIE | SSP1IE | CCP1IE | TMR2IE | TMR1IE | 87 |
| PIR1 | TMR1GIF | ADIF | RCIF | TXIF | SSP1IF | CCP1IF | TMR2IF | TMR1IF | 90 |
| RC1STA | SPEN | RX9 | SREN | CREN | ADDEN | FERR | OERR | RX9D | 348 |
| RxyPPS | — | — | — | RxyPPS<4:0> | | | | | 143 |
| SP1BRGL | BRG<7:0> | | | | | | | | 350* |
| SP1BRGH | BRG<15:8> | | | | | | | | 350* |
| TRISA | — | — | TRISA5 | TRISA4 | —(3) | TRISA2 | TRISA1 | TRISA0 | 124 |
| TRISB(2) | TRISB7 | TRISB6 | TRISB5 | TRISB4 | — | — | — | — | 130 |
| TRISC | TRISC7(1) | TRISC6(1) | TRISC5 | TRISC4 | TRISC3 | TRISC2 | TRISC1 | TRISC0 | 135 |
| TX1REG | EUSART Transmit Data Register | | | | | | | | 339* |
| TX1STA | CSRC | TX9 | TXEN | SYNC | SENDB | BRGH | TRMT | TX9D | 347 |

**Legend:** — = unimplemented location, read as '0'. Shaded cells are not used for asynchronous transmission.
* Page provides register information.

**Note 1:** PIC16(L)F1708 only.
**2:** PIC16(L)F1704 only.
**3:** Unimplemented, read as '1'.

chanhvinh.com



### 29.1.2 EUSART ASYNCHRONOUS RECEIVER

The Asynchronous mode is typically used in RS-232 systems. The receiver block diagram is shown in Figure 29-2. The data is received on the RX/DT pin and drives the data recovery block. The data recovery block is actually a high-speed shifter operating at 16 times the baud rate, whereas the serial Receive Shift Register (RSR) operates at the bit rate. When all eight or nine bits of the character have been shifted in, they are immediately transferred to a two character First-In-First-Out (FIFO) memory. The FIFO buffering allows reception of two complete characters and the start of a third character before software must start servicing the EUSART receiver. The FIFO and RSR registers are not directly accessible by software. Access to the received data is via the RCREG register.

#### 29.1.2.1 Enabling the Receiver

The EUSART receiver is enabled for asynchronous operation by configuring the following three control bits:

- CREN = 1
- SYNC = 0
- SPEN = 1

All other EUSART control bits are assumed to be in their default state.

Setting the CREN bit of the RCSTA register enables the receiver circuitry of the EUSART. Clearing the SYNC bit of the TXSTA register configures the EUSART for asynchronous operation. Setting the SPEN bit of the RCSTA register enables the EUSART. The programmer must set the corresponding TRIS bit to configure the RX/DT I/O pin as an input.

| | |
|---|---|
| **Note:** | If the RX/DT function is on an analog pin, the corresponding ANSEL bit must be cleared for the receiver to function. |

#### 29.1.2.2 Receiving Data

The receiver data recovery circuit initiates character reception on the falling edge of the first bit. The first bit, also known as the Start bit, is always a zero. The data recovery circuit counts one-half bit time to the center of the Start bit and verifies that the bit is still a zero. If it is not a zero then the data recovery circuit aborts character reception, without generating an error, and resumes looking for the falling edge of the Start bit. If the Start bit zero verification succeeds then the data recovery circuit counts a full bit time to the center of the next bit. The bit is then sampled by a majority detect circuit and the resulting '0' or '1' is shifted into the RSR. This repeats until all data bits have been sampled and shifted into the RSR. One final bit time is measured and the level sampled. This is the Stop bit, which is always a '1'. If the data recovery circuit samples a '0' in the Stop bit position then a framing error is set for this character, otherwise the framing error is cleared for this character. See **Section 29.1.2.4 "Receive Framing Error"** for more information on framing errors.

Immediately after all data bits and the Stop bit have been received, the character in the RSR is transferred to the EUSART receive FIFO and the RCIF interrupt flag bit of the PIR1 register is set. The top character in the FIFO is transferred out of the FIFO by reading the RCREG register.

| | |
|---|---|
| **Note:** | If the receive FIFO is overrun, no additional characters will be received until the overrun condition is cleared. See **Section 29.1.2.5 "Receive Overrun Error"** for more information on overrun errors. |

#### 29.1.2.3 Receive Interrupts

The RCIF interrupt flag bit of the PIR1 register is set whenever the EUSART receiver is enabled and there is an unread character in the receive FIFO. The RCIF interrupt flag bit is read-only, it cannot be set or cleared by software.

RCIF interrupts are enabled by setting all of the following bits:

- RCIE, Interrupt Enable bit of the PIE1 register
- PEIE, Peripheral Interrupt Enable bit of the INTCON register
- GIE, Global Interrupt Enable bit of the INTCON register

The RCIF interrupt flag bit will be set when there is an unread character in the FIFO, regardless of the state of interrupt enable bits.

 © 2013 Microchip Technology Inc.

chanhvinh.com



#### 29.1.2.4 Receive Framing Error

Each character in the receive FIFO buffer has a corresponding framing error Status bit. A framing error indicates that a Stop bit was not seen at the expected time. The framing error status is accessed via the FERR bit of the RCSTA register. The FERR bit represents the status of the top unread character in the receive FIFO. Therefore, the FERR bit must be read before reading the RCREG.

The FERR bit is read-only and only applies to the top unread character in the receive FIFO. A framing error (FERR = 1) does not preclude reception of additional characters. It is not necessary to clear the FERR bit. Reading the next character from the FIFO buffer will advance the FIFO to the next character and the next corresponding framing error.

The FERR bit can be forced clear by clearing the SPEN bit of the RCSTA register which resets the EUSART. Clearing the CREN bit of the RCSTA register does not affect the FERR bit. A framing error by itself does not generate an interrupt.

| | |
|---|---|
| **Note:** | If all receive characters in the receive FIFO have framing errors, repeated reads of the RCREG will not clear the FERR bit. |

#### 29.1.2.5 Receive Overrun Error

The receive FIFO buffer can hold two characters. An overrun error will be generated if a third character, in its entirety, is received before the FIFO is accessed. When this happens the OERR bit of the RCSTA register is set. The characters already in the FIFO buffer can be read but no additional characters will be received until the error is cleared. The error must be cleared by either clearing the CREN bit of the RCSTA register or by resetting the EUSART by clearing the SPEN bit of the RCSTA register.

#### 29.1.2.6 Receiving 9-Bit Characters

The EUSART supports 9-bit character reception. When the RX9 bit of the RCSTA register is set the EUSART will shift nine bits into the RSR for each character received. The RX9D bit of the RCSTA register is the ninth and Most Significant data bit of the top unread character in the receive FIFO. When reading 9-bit data from the receive FIFO buffer, the RX9D data bit must be read before reading the eight Least Significant bits from the RCREG.

#### 29.1.2.7 Address Detection

A special Address Detection mode is available for use when multiple receivers share the same transmission line, such as in RS-485 systems. Address detection is enabled by setting the ADDEN bit of the RCSTA register.

Address detection requires 9-bit character reception. When address detection is enabled, only characters with the ninth data bit set will be transferred to the receive FIFO buffer, thereby setting the RCIF interrupt bit. All other characters will be ignored.

Upon receiving an address character, user software determines if the address matches its own. Upon address match, user software must disable address detection by clearing the ADDEN bit before the next Stop bit occurs. When user software detects the end of the message, determined by the message protocol used, software places the receiver back into the Address Detection mode by setting the ADDEN bit.

chanhvinh.com



### 29.1.2.8 Asynchronous Reception Set-up:

1. Initialize the SPBRGH, SPBRGL register pair and the BRGH and BRG16 bits to achieve the desired baud rate (see **Section 29.4 "EUSART Baud Rate Generator (BRG)"**).
2. Clear the ANSEL bit for the RX pin (if applicable).
3. Enable the serial port by setting the SPEN bit. The SYNC bit must be clear for asynchronous operation.
4. If interrupts are desired, set the RCIE bit of the PIE1 register and the GIE and PEIE bits of the INTCON register.
5. If 9-bit reception is desired, set the RX9 bit.
6. Enable reception by setting the CREN bit.
7. The RCIF interrupt flag bit will be set when a character is transferred from the RSR to the receive buffer. An interrupt will be generated if the RCIE interrupt enable bit was also set.
8. Read the RCSTA register to get the error flags and, if 9-bit data reception is enabled, the ninth data bit.
9. Get the received eight Least Significant data bits from the receive buffer by reading the RCREG register.
10. If an overrun occurred, clear the OERR flag by clearing the CREN receiver enable bit.

### 29.1.2.9 9-bit Address Detection Mode Set-up

This mode would typically be used in RS-485 systems. To set up an Asynchronous Reception with Address Detect Enable:

1. Initialize the SPBRGH, SPBRGL register pair and the BRGH and BRG16 bits to achieve the desired baud rate (see **Section 29.4 "EUSART Baud Rate Generator (BRG)"**).
2. Clear the ANSEL bit for the RX pin (if applicable).
3. Enable the serial port by setting the SPEN bit. The SYNC bit must be clear for asynchronous operation.
4. If interrupts are desired, set the RCIE bit of the PIE1 register and the GIE and PEIE bits of the INTCON register.
5. Enable 9-bit reception by setting the RX9 bit.
6. Enable address detection by setting the ADDEN bit.
7. Enable reception by setting the CREN bit.
8. The RCIF interrupt flag bit will be set when a character with the ninth bit set is transferred from the RSR to the receive buffer. An interrupt will be generated if the RCIE interrupt enable bit was also set.
9. Read the RCSTA register to get the error flags. The ninth data bit will always be set.
10. Get the received eight Least Significant data bits from the receive buffer by reading the RCREG register. Software determines if this is the device's address.
11. If an overrun occurred, clear the OERR flag by clearing the CREN receiver enable bit.
12. If the device has been addressed, clear the ADDEN bit to allow all received data into the receive buffer and generate interrupts.

**FIGURE 29-5: ASYNCHRONOUS RECEPTION**

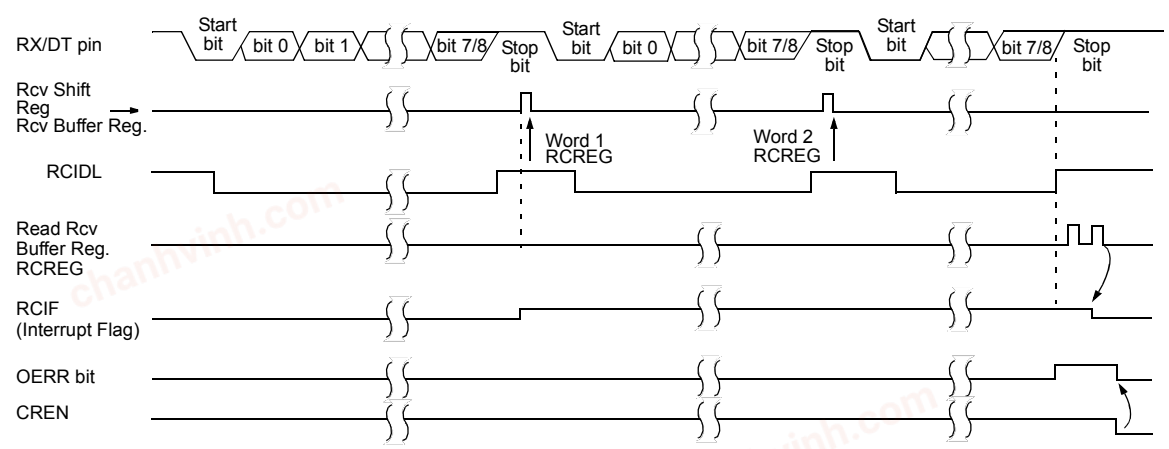


**Note:** This timing diagram shows three words appearing on the RX input. The RCREG (receive buffer) is read after the third word, causing the OERR (overrun) bit to be set.

 © 2013 Microchip Technology Inc.

chanhvinh.com



**TABLE 29-2: SUMMARY OF REGISTERS ASSOCIATED WITH ASYNCHRONOUS RECEPTION**

| Name | Bit 7 | Bit 6 | Bit 5 | Bit 4 | Bit 3 | Bit 2 | Bit 1 | Bit 0 | Register on Page |
|---|---|---|---|---|---|---|---|---|---|
| ANSELA | — | — | — | ANSA4 | — | ANSA2 | ANSA1 | ANSA0 | 125 |
| ANSELB(1) | — | — | ANSB5 | ANSB4 | — | — | — | — | 131 |
| ANSELC | ANSC7(1) | ANSC6(1) | ANSC5(2) | ANSC4(2) | ANSC3 | ANSC2 | ANSC1 | ANSC0 | 136 |
| BAUD1CON | ABDOVF | RCIDL | — | SCKP | BRG16 | — | WUE | ABDEN | 349 |
| INTCON | GIE | PEIE | TMR0IE | INTE | IOCIE | TMR0IF | INTF | IOCIF | 86 |
| PIE1 | TMR1GIE | ADIE | RCIE | TXIE | SSP1IE | CCP1IE | TMR2IE | TMR1IE | 87 |
| PIR1 | TMR1GIF | ADIF | RCIF | TXIF | SSP1IF | CCP1IF | TMR2IF | TMR1IF | 90 |
| RC1REG | EUSART Receive Data Register | | | | | | | | 342* |
| RC1STA | SPEN | RX9 | SREN | CREN | ADDEN | FERR | OERR | RX9D | 348 |
| RxyPPS | — | — | — | RxyPPS<4:0> | | | | | 143 |
| SP1BRGL | BRG<7:0> | | | | | | | | 350 |
| SP1BRGH | BRG<15:8> | | | | | | | | 350 |
| TRISA | — | — | TRISA5 | TRISA4 | —(3) | TRISA2 | TRISA1 | TRISA0 | 124 |
| TRISB(1) | TRISB7 | TRISB6 | TRISB5 | TRISB4 | — | — | — | — | 130 |
| TRISC | TRISC7(1) | TRISC6(1) | TRISC5 | TRISC4 | TRISC3 | TRISC2 | TRISC1 | TRISA0 | 135 |
| TX1STA | CSRC | TX9 | TXEN | SYNC | SENDB | BRGH | TRMT | TX9D | 347 |

**Legend:** — = unimplemented location, read as '0'. Shaded cells are not used for asynchronous reception.
* Page provides register information.

**Note 1:** PIC16(L)F1708 only.
**2:** PIC16(L)F1704 only.
**3:** Unimplemented, read as '1'.

chanhvinh.com



## 29.2 Clock Accuracy with Asynchronous Operation

The factory calibrates the internal oscillator block output (INTOSC). However, the INTOSC frequency may drift as $V_{DD}$ or temperature changes, and this directly affects the asynchronous baud rate. Two methods may be used to adjust the baud rate clock, but both require a reference clock source of some kind.

The first (preferred) method uses the OSCTUNE register to adjust the INTOSC output. Adjusting the value in the OSCTUNE register allows for fine resolution changes to the system clock source. See **Section 6.2.2.3 "Internal Oscillator Frequency Adjustment"** for more information.

The other method adjusts the value in the Baud Rate Generator. This can be done automatically with the Auto-Baud Detect feature (see **Section 29.4.1 "Auto-Baud Detect"**). There may not be fine enough resolution when adjusting the Baud Rate Generator to compensate for a gradual change in the peripheral clock frequency.

 © 2013 Microchip Technology Inc.

chanhvinh.com



## 29.3 Register Definitions: EUSART Control

### REGISTER 29-1: TX1STA: TRANSMIT STATUS AND CONTROL REGISTER

| R/W-/0 | R/W-0/0 | R/W-0/0 | R/W-0/0 | R/W-0/0 | R/W-0/0 | R-1/1 | R/W-0/0 |
|---|---|---|---|---|---|---|---|
| CSRC | TX9 | TXEN(1) | SYNC | SENDB | BRGH | TRMT | TX9D |
| bit 7 | | | | | | | bit 0 |

| Legend: | | |
|---|---|---|
| R = Readable bit | W = Writable bit | U = Unimplemented bit, read as '0' |
| u = Bit is unchanged | x = Bit is unknown | -n/n = Value at POR and BOR/Value at all other Resets |
| '1' = Bit is set | '0' = Bit is cleared | |

bit 7 **CSRC:** Clock Source Select bit
Asynchronous mode:
Don't care
Synchronous mode:
1 = Master mode (clock generated internally from BRG)
0 = Slave mode (clock from external source)

bit 6 **TX9:** 9-bit Transmit Enable bit
1 = Selects 9-bit transmission
0 = Selects 8-bit transmission

bit 5 **TXEN:** Transmit Enable bit(1)
1 = Transmit enabled
0 = Transmit disabled

bit 4 **SYNC:** EUSART Mode Select bit
1 = Synchronous mode
0 = Asynchronous mode

bit 3 **SENDB:** Send Break Character bit
Asynchronous mode:
1 = Send Sync Break on next transmission (cleared by hardware upon completion)
0 = Sync Break transmission completed
Synchronous mode:
Don't care

bit 2 **BRGH:** High Baud Rate Select bit
Asynchronous mode:
1 = High speed
0 = Low speed
Synchronous mode:
Unused in this mode

bit 1 **TRMT:** Transmit Shift Register Status bit
1 = TSR empty
0 = TSR full

bit 0 **TX9D:** Ninth bit of Transmit Data
Can be address/data bit or a parity bit.

**Note 1:** SREN/CREN overrides TXEN in Sync mode.

chanhvinh.com



**REGISTER 29-2: RC1STA: RECEIVE STATUS AND CONTROL REGISTER**

| R/W-0/0 | R/W-0/0 | R/W-0/0 | R/W-0/0 | R/W-0/0 | R-0/0 | R-0/0 | R-0/0 |
|---|---|---|---|---|---|---|---|
| SPEN | RX9 | SREN | CREN | ADDEN | FERR | OERR | RX9D |
| bit 7 | | | | | | | bit 0 |

| **Legend:** | | |
|---|---|---|
| R = Readable bit | W = Writable bit | U = Unimplemented bit, read as '0' |
| u = Bit is unchanged | x = Bit is unknown | -n/n = Value at POR and BOR/Value at all other Resets |
| '1' = Bit is set | '0' = Bit is cleared | |

bit 7 **SPEN:** Serial Port Enable bit
1 = Serial port enabled
0 = Serial port disabled (held in Reset)

bit 6 **RX9:** 9-Bit Receive Enable bit
1 = Selects 9-bit reception
0 = Selects 8-bit reception

bit 5 **SREN:** Single Receive Enable bit
Asynchronous mode:
Don't care
Synchronous mode – Master:
1 = Enables single receive
0 = Disables single receive
This bit is cleared after reception is complete.
Synchronous mode – Slave
Don't care

bit 4 **CREN:** Continuous Receive Enable bit
Asynchronous mode:
1 = Enables receiver
0 = Disables receiver
Synchronous mode:
1 = Enables continuous receive until enable bit CREN is cleared (CREN overrides SREN)
0 = Disables continuous receive

bit 3 **ADDEN:** Address Detect Enable bit
Asynchronous mode 9-bit (RX9 = 1):
1 = Enables address detection, enable interrupt and load the receive buffer when RSR<8> is set
0 = Disables address detection, all bytes are received and ninth bit can be used as parity bit
Asynchronous mode 8-bit (RX9 = 0):
Don't care

bit 2 **FERR:** Framing Error bit
1 = Framing error (can be updated by reading RCREG register and receive next valid byte)
0 = No framing error

bit 1 **OERR:** Overrun Error bit
1 = Overrun error (can be cleared by clearing bit CREN)
0 = No overrun error

bit 0 **RX9D:** Ninth bit of Received Data
This can be address/data bit or a parity bit and must be calculated by user firmware.

 © 2013 Microchip Technology Inc.

chanhvinh.com



**REGISTER 29-3: BAUD1CON: BAUD RATE CONTROL REGISTER**

| R-0/0 | R-1/1 | U-0 | R/W-0/0 | R/W-0/0 | U-0 | R/W-0/0 | R/W-0/0 |
|---|---|---|---|---|---|---|---|
| ABDOVF | RCIDL | — | SCKP | BRG16 | — | WUE | ABDEN |
| bit 7 | | | | | | | bit 0 |

| **Legend:** | | |
|---|---|---|
| R = Readable bit | W = Writable bit | U = Unimplemented bit, read as '0' |
| u = Bit is unchanged | x = Bit is unknown | -n/n = Value at POR and BOR/Value at all other Resets |
| '1' = Bit is set | '0' = Bit is cleared | |

bit 7 **ABDOVF:** Auto-Baud Detect Overflow bit
Asynchronous mode:
1 = Auto-baud timer overflowed
0 = Auto-baud timer did not overflow
Synchronous mode:
Don't care

bit 6 **RCIDL**: Receive Idle Flag bit
Asynchronous mode:
1 = Receiver is Idle
0 = Start bit has been received and the receiver is receiving
Synchronous mode:
Don't care

bit 5 **Unimplemented:** Read as '0'

bit 4 **SCKP**: Synchronous Clock Polarity Select bit
Asynchronous mode:
1 = Transmit inverted data to the TX/CK pin
0 = Transmit non-inverted data to the TX/CK pin
Synchronous mode:
1 = Data is clocked on rising edge of the clock
0 = Data is clocked on falling edge of the clock

bit 3 **BRG16:** 16-bit Baud Rate Generator bit
1 = 16-bit Baud Rate Generator is used
0 = 8-bit Baud Rate Generator is used

bit 2 **Unimplemented:** Read as '0'

bit 1 **WUE:** Wake-up Enable bit
Asynchronous mode:
1 = Receiver is waiting for a falling edge. No character will be received, byte RCIF will be set. WUE will automatically clear after RCIF is set.
0 = Receiver is operating normally
Synchronous mode:
Don't care

bit 0 **ABDEN**: Auto-Baud Detect Enable bit
Asynchronous mode:
1 = Auto-Baud Detect mode is enabled (clears when auto-baud is complete)
0 = Auto-Baud Detect mode is disabled
Synchronous mode:
Don't care

chanhvinh.com



## 29.4 EUSART Baud Rate Generator (BRG)

The Baud Rate Generator (BRG) is an 8-bit or 16-bit timer that is dedicated to the support of both the asynchronous and synchronous EUSART operation. By default, the BRG operates in 8-bit mode. Setting the BRG16 bit of the BAUDCON register selects 16-bit mode.

The SPBRGH, SPBRGL register pair determines the period of the free running baud rate timer. In Asynchronous mode the multiplier of the baud rate period is determined by both the BRGH bit of the TXSTA register and the BRG16 bit of the BAUDCON register. In Synchronous mode, the BRGH bit is ignored.

Table 29-3 contains the formulas for determining the baud rate. Example 29-1 provides a sample calculation for determining the baud rate and baud rate error.

Typical baud rates and error values for various asynchronous modes have been computed for your convenience and are shown in Table 29-5. It may be advantageous to use the high baud rate (BRGH = 1), or the 16-bit BRG (BRG16 = 1) to reduce the baud rate error. The 16-bit BRG mode is used to achieve slow baud rates for fast oscillator frequencies.

Writing a new value to the SPBRGH, SPBRGL register pair causes the BRG timer to be reset (or cleared). This ensures that the BRG does not wait for a timer overflow before outputting the new baud rate.

If the system clock is changed during an active receive operation, a receive error or data loss may result. To avoid this problem, check the status of the RCIDL bit to make sure that the receive operation is idle before changing the system clock.

### EXAMPLE 29-1: CALCULATING BAUD RATE ERROR

For a device with FOSC of 16 MHz, desired baud rate of 9600, Asynchronous mode, 8-bit BRG:

$$Desired\ Baud\ Rate = \frac{FOSC}{64([SPBRGH:SPBRGL] + 1)}$$

Solving for SPBRGH:SPBRGL:

$$X = \frac{\frac{FOSC}{Desired\ Baud\ Rate}}{64} - 1$$

$$= \frac{\frac{16000000}{9600}}{64} - 1$$

$$= [25.042] = 25$$

$$Calculated\ Baud\ Rate = \frac{16000000}{64(25 + 1)}$$

$$= 9615$$

$$Error = \frac{Calc.\ Baud\ Rate - Desired\ Baud\ Rate}{Desired\ Baud\ Rate}$$

$$= \frac{(9615 - 9600)}{9600} = 0.16\%$$

 © 2013 Microchip Technology Inc.

chanhvinh.com



**TABLE 29-3: BAUD RATE FORMULAS**

| Configuration Bits | | | BRG/EUSART Mode | Baud Rate Formula |
|---|---|---|---|---|
| SYNC | BRG16 | BRGH | | |
| 0 | 0 | 0 | 8-bit/Asynchronous | Fosc/[64 (n+1)] |
| 0 | 0 | 1 | 8-bit/Asynchronous | Fosc/[16 (n+1)] |
| 0 | 1 | 0 | 16-bit/Asynchronous | |
| 0 | 1 | 1 | 16-bit/Asynchronous | Fosc/[4 (n+1)] |
| 1 | 0 | x | 8-bit/Synchronous | |
| 1 | 1 | x | 16-bit/Synchronous | |

**Legend:** x = Don't care, n = value of SPBRGH, SPBRGL register pair.

**TABLE 29-4: SUMMARY OF REGISTERS ASSOCIATED WITH THE BAUD RATE GENERATOR**

| Name | Bit 7 | Bit 6 | Bit 5 | Bit 4 | Bit 3 | Bit 2 | Bit 1 | Bit 0 | Register on Page |
|---|---|---|---|---|---|---|---|---|---|
| BAUD1CON | ABDOVF | RCIDL | — | SCKP | BRG16 | — | WUE | ABDEN | 349 |
| RC1STA | SPEN | RX9 | SREN | CREN | ADDEN | FERR | OERR | RX9D | 348 |
| SP1BRGL | BRG<7:0> | | | | | | | | 350 |
| SP1BRGH | BRG<15:8> | | | | | | | | 350 |
| TX1STA | CSRC | TX9 | TXEN | SYNC | SENDB | BRGH | TRMT | TX9D | 347 |

**Legend:** — = unimplemented location, read as '0'. Shaded cells are not used for the Baud Rate Generator.

* Page provides register information.

chanhvinh.com



**TABLE 29-5: BAUD RATES FOR ASYNCHRONOUS MODES**

| BAUD RATE | SYNC = 0, BRGH = 0, BRG16 = 0 | | | | | | | | | | | |
|---|---|---|---|---|---|---|---|---|---|---|---|---|
| | Fosc = 32.000 MHz | | | Fosc = 20.000 MHz | | | Fosc = 18.432 MHz | | | Fosc = 11.0592 MHz | | |
| | Actual Rate | % Error | SPBRG value (decimal) | Actual Rate | % Error | SPBRG value (decimal) | Actual Rate | % Error | SPBRG value (decimal) | Actual Rate | % Error | SPBRG value (decimal) |
| 300 | — | — | — | — | — | — | — | — | — | — | — | — |
| 1200 | — | — | — | 1221 | 1.73 | 255 | 1200 | 0.00 | 239 | 1200 | 0.00 | 143 |
| 2400 | 2404 | 0.16 | 207 | 2404 | 0.16 | 129 | 2400 | 0.00 | 119 | 2400 | 0.00 | 71 |
| 9600 | 9615 | 0.16 | 51 | 9470 | -1.36 | 32 | 9600 | 0.00 | 29 | 9600 | 0.00 | 17 |
| 10417 | 10417 | 0.00 | 47 | 10417 | 0.00 | 29 | 10286 | -1.26 | 27 | 10165 | -2.42 | 16 |
| 19.2k | 19.23k | 0.16 | 25 | 19.53k | 1.73 | 15 | 19.20k | 0.00 | 14 | 19.20k | 0.00 | 8 |
| 57.6k | 55.55k | -3.55 | 3 | — | — | — | 57.60k | 0.00 | 7 | 57.60k | 0.00 | 2 |
| 115.2k | — | — | — | — | — | — | — | — | — | — | — | — |

| BAUD RATE | SYNC = 0, BRGH = 0, BRG16 = 0 | | | | | | | | | | | |
|---|---|---|---|---|---|---|---|---|---|---|---|---|
| | Fosc = 8.000 MHz | | | Fosc = 4.000 MHz | | | Fosc = 3.6864 MHz | | | Fosc = 1.000 MHz | | |
| | Actual Rate | % Error | SPBRG value (decimal) | Actual Rate | % Error | SPBRG value (decimal) | Actual Rate | % Error | SPBRG value (decimal) | Actual Rate | % Error | SPBRG value (decimal) |
| 300 | — | — | — | 300 | 0.16 | 207 | 300 | 0.00 | 191 | 300 | 0.16 | 51 |
| 1200 | 1202 | 0.16 | 103 | 1202 | 0.16 | 51 | 1200 | 0.00 | 47 | 1202 | 0.16 | 12 |
| 2400 | 2404 | 0.16 | 51 | 2404 | 0.16 | 25 | 2400 | 0.00 | 23 | — | — | — |
| 9600 | 9615 | 0.16 | 12 | — | — | — | 9600 | 0.00 | 5 | — | — | — |
| 10417 | 10417 | 0.00 | 11 | 10417 | 0.00 | 5 | — | — | — | — | — | — |
| 19.2k | — | — | — | — | — | — | 19.20k | 0.00 | 2 | — | — | — |
| 57.6k | — | — | — | — | — | — | 57.60k | 0.00 | 0 | — | — | — |
| 115.2k | — | — | — | — | — | — | — | — | — | — | — | — |

| BAUD RATE | SYNC = 0, BRGH = 1, BRG16 = 0 | | | | | | | | | | | |
|---|---|---|---|---|---|---|---|---|---|---|---|---|
| | Fosc = 32.000 MHz | | | Fosc = 20.000 MHz | | | Fosc = 18.432 MHz | | | Fosc = 11.0592 MHz | | |
| | Actual Rate | % Error | SPBRG value (decimal) | Actual Rate | % Error | SPBRG value (decimal) | Actual Rate | % Error | SPBRG value (decimal) | Actual Rate | % Error | SPBRG value (decimal) |
| 300 | — | — | — | — | — | — | — | — | — | — | — | — |
| 1200 | — | — | — | — | — | — | — | — | — | — | — | — |
| 2400 | — | — | — | — | — | — | — | — | — | — | — | — |
| 9600 | 9615 | 0.16 | 207 | 9615 | 0.16 | 129 | 9600 | 0.00 | 119 | 9600 | 0.00 | 71 |
| 10417 | 10417 | 0.00 | 191 | 10417 | 0.00 | 119 | 10378 | -0.37 | 110 | 10473 | 0.53 | 65 |
| 19.2k | 19.23k | 0.16 | 103 | 19.23k | 0.16 | 64 | 19.20k | 0.00 | 59 | 19.20k | 0.00 | 35 |
| 57.6k | 57.14k | -0.79 | 34 | 56.82k | -1.36 | 21 | 57.60k | 0.00 | 19 | 57.60k | 0.00 | 11 |
| 115.2k | 117.64k | 2.12 | 16 | 113.64k | -1.36 | 10 | 115.2k | 0.00 | 9 | 115.2k | 0.00 | 5 |

 © 2013 Microchip Technology Inc.

chanhvinh.com



**TABLE 29-5: BAUD RATES FOR ASYNCHRONOUS MODES (CONTINUED)**

| BAUD RATE | SYNC = 0, BRGH = 1, BRG16 = 0 | | | | | | | | | | | |
|---|---|---|---|---|---|---|---|---|---|---|---|---|
| | Fosc = 8.000 MHz | | | Fosc = 4.000 MHz | | | Fosc = 3.6864 MHz | | | Fosc = 1.000 MHz | | |
| | Actual Rate | % Error | SPBRG value (decimal) | Actual Rate | % Error | SPBRG value (decimal) | Actual Rate | % Error | SPBRG value (decimal) | Actual Rate | % Error | SPBRG value (decimal) |
| 300 | — | — | — | — | — | — | — | — | — | 300 | 0.16 | 207 |
| 1200 | — | — | — | 1202 | 0.16 | 207 | 1200 | 0.00 | 191 | 1202 | 0.16 | 51 |
| 2400 | 2404 | 0.16 | 207 | 2404 | 0.16 | 103 | 2400 | 0.00 | 95 | 2404 | 0.16 | 25 |
| 9600 | 9615 | 0.16 | 51 | 9615 | 0.16 | 25 | 9600 | 0.00 | 23 | — | — | — |
| 10417 | 10417 | 0.00 | 47 | 10417 | 0.00 | 23 | 10473 | 0.53 | 21 | 10417 | 0.00 | 5 |
| 19.2k | 19231 | 0.16 | 25 | 19.23k | 0.16 | 12 | 19.2k | 0.00 | 11 | — | — | — |
| 57.6k | 55556 | -3.55 | 8 | — | — | — | 57.60k | 0.00 | 3 | — | — | — |
| 115.2k | — | — | — | — | — | — | 115.2k | 0.00 | 1 | — | — | — |

| BAUD RATE | SYNC = 0, BRGH = 0, BRG16 = 1 | | | | | | | | | | | |
|---|---|---|---|---|---|---|---|---|---|---|---|---|
| | Fosc = 32.000 MHz | | | Fosc = 20.000 MHz | | | Fosc = 18.432 MHz | | | Fosc = 11.0592 MHz | | |
| | Actual Rate | % Error | SPBRG value (decimal) | Actual Rate | % Error | SPBRG value (decimal) | Actual Rate | % Error | SPBRG value (decimal) | Actual Rate | % Error | SPBRG value (decimal) |
| 300 | 300.0 | 0.00 | 6666 | 300.0 | -0.01 | 4166 | 300.0 | 0.00 | 3839 | 300.0 | 0.00 | 2303 |
| 1200 | 1200 | -0.02 | 3332 | 1200 | -0.03 | 1041 | 1200 | 0.00 | 959 | 1200 | 0.00 | 575 |
| 2400 | 2401 | -0.04 | 832 | 2399 | -0.03 | 520 | 2400 | 0.00 | 479 | 2400 | 0.00 | 287 |
| 9600 | 9615 | 0.16 | 207 | 9615 | 0.16 | 129 | 9600 | 0.00 | 119 | 9600 | 0.00 | 71 |
| 10417 | 10417 | 0.00 | 191 | 10417 | 0.00 | 119 | 10378 | -0.37 | 110 | 10473 | 0.53 | 65 |
| 19.2k | 19.23k | 0.16 | 103 | 19.23k | 0.16 | 64 | 19.20k | 0.00 | 59 | 19.20k | 0.00 | 35 |
| 57.6k | 57.14k | -0.79 | 34 | 56.818 | -1.36 | 21 | 57.60k | 0.00 | 19 | 57.60k | 0.00 | 11 |
| 115.2k | 117.6k | 2.12 | 16 | 113.636 | -1.36 | 10 | 115.2k | 0.00 | 9 | 115.2k | 0.00 | 5 |

| BAUD RATE | SYNC = 0, BRGH = 0, BRG16 = 1 | | | | | | | | | | | |
|---|---|---|---|---|---|---|---|---|---|---|---|---|
| | Fosc = 8.000 MHz | | | Fosc = 4.000 MHz | | | Fosc = 3.6864 MHz | | | Fosc = 1.000 MHz | | |
| | Actual Rate | % Error | SPBRG value (decimal) | Actual Rate | % Error | SPBRG value (decimal) | Actual Rate | % Error | SPBRG value (decimal) | Actual Rate | % Error | SPBRG value (decimal) |
| 300 | 299.9 | -0.02 | 1666 | 300.1 | 0.04 | 832 | 300.0 | 0.00 | 767 | 300.5 | 0.16 | 207 |
| 1200 | 1199 | -0.08 | 416 | 1202 | 0.16 | 207 | 1200 | 0.00 | 191 | 1202 | 0.16 | 51 |
| 2400 | 2404 | 0.16 | 207 | 2404 | 0.16 | 103 | 2400 | 0.00 | 95 | 2404 | 0.16 | 25 |
| 9600 | 9615 | 0.16 | 51 | 9615 | 0.16 | 25 | 9600 | 0.00 | 23 | — | — | — |
| 10417 | 10417 | 0.00 | 47 | 10417 | 0.00 | 23 | 10473 | 0.53 | 21 | 10417 | 0.00 | 5 |
| 19.2k | 19.23k | 0.16 | 25 | 19.23k | 0.16 | 12 | 19.20k | 0.00 | 11 | — | — | — |
| 57.6k | 55556 | -3.55 | 8 | — | — | — | 57.60k | 0.00 | 3 | — | — | — |
| 115.2k | — | — | — | — | — | — | 115.2k | 0.00 | 1 | — | — | — |

chanhvinh.com



**TABLE 29-5: BAUD RATES FOR ASYNCHRONOUS MODES (CONTINUED)**

| BAUD RATE | SYNC = 0, BRGH = 1, BRG16 = 1 or SYNC = 1, BRG16 = 1 | | | | | | | | | | | |
|---|---|---|---|---|---|---|---|---|---|---|---|---|
| | Fosc = 32.000 MHz | | | Fosc = 20.000 MHz | | | Fosc = 18.432 MHz | | | Fosc = 11.0592 MHz | | |
| | Actual Rate | % Error | SPBRG value (decimal) | Actual Rate | % Error | SPBRG value (decimal) | Actual Rate | % Error | SPBRG value (decimal) | Actual Rate | % Error | SPBRG value (decimal) |
| 300 | 300.0 | 0.00 | 26666 | 300.0 | 0.00 | 16665 | 300.0 | 0.00 | 15359 | 300.0 | 0.00 | 9215 |
| 1200 | 1200 | 0.00 | 6666 | 1200 | -0.01 | 4166 | 1200 | 0.00 | 3839 | 1200 | 0.00 | 2303 |
| 2400 | 2400 | 0.01 | 3332 | 2400 | 0.02 | 2082 | 2400 | 0.00 | 1919 | 2400 | 0.00 | 1151 |
| 9600 | 9604 | 0.04 | 832 | 9597 | -0.03 | 520 | 9600 | 0.00 | 479 | 9600 | 0.00 | 287 |
| 10417 | 10417 | 0.00 | 767 | 10417 | 0.00 | 479 | 10425 | 0.08 | 441 | 10433 | 0.16 | 264 |
| 19.2k | 19.18k | -0.08 | 416 | 19.23k | 0.16 | 259 | 19.20k | 0.00 | 239 | 19.20k | 0.00 | 143 |
| 57.6k | 57.55k | -0.08 | 138 | 57.47k | -0.22 | 86 | 57.60k | 0.00 | 79 | 57.60k | 0.00 | 47 |
| 115.2k | 115.9k | 0.64 | 68 | 116.3k | 0.94 | 42 | 115.2k | 0.00 | 39 | 115.2k | 0.00 | 23 |

| BAUD RATE | SYNC = 0, BRGH = 1, BRG16 = 1 or SYNC = 1, BRG16 = 1 | | | | | | | | | | | |
|---|---|---|---|---|---|---|---|---|---|---|---|---|
| | Fosc = 8.000 MHz | | | Fosc = 4.000 MHz | | | Fosc = 3.6864 MHz | | | Fosc = 1.000 MHz | | |
| | Actual Rate | % Error | SPBRG value (decimal) | Actual Rate | % Error | SPBRG value (decimal) | Actual Rate | % Error | SPBRG value (decimal) | Actual Rate | % Error | SPBRG value (decimal) |
| 300 | 300.0 | 0.00 | 6666 | 300.0 | 0.01 | 3332 | 300.0 | 0.00 | 3071 | 300.1 | 0.04 | 832 |
| 1200 | 1200 | -0.02 | 1666 | 1200 | 0.04 | 832 | 1200 | 0.00 | 767 | 1202 | 0.16 | 207 |
| 2400 | 2401 | 0.04 | 832 | 2398 | 0.08 | 416 | 2400 | 0.00 | 383 | 2404 | 0.16 | 103 |
| 9600 | 9615 | 0.16 | 207 | 9615 | 0.16 | 103 | 9600 | 0.00 | 95 | 9615 | 0.16 | 25 |
| 10417 | 10417 | 0 | 191 | 10417 | 0.00 | 95 | 10473 | 0.53 | 87 | 10417 | 0.00 | 23 |
| 19.2k | 19.23k | 0.16 | 103 | 19.23k | 0.16 | 51 | 19.20k | 0.00 | 47 | 19.23k | 0.16 | 12 |
| 57.6k | 57.14k | -0.79 | 34 | 58.82k | 2.12 | 16 | 57.60k | 0.00 | 15 | — | — | — |
| 115.2k | 117.6k | 2.12 | 16 | 111.1k | -3.55 | 8 | 115.2k | 0.00 | 7 | — | — | — |

 © 2013 Microchip Technology Inc.

chanhvinh.com



### 29.4.1 AUTO-BAUD DETECT

The EUSART module supports automatic detection and calibration of the baud rate.

In the Auto-Baud Detect (ABD) mode, the clock to the BRG is reversed. Rather than the BRG clocking the incoming RX signal, the RX signal is timing the BRG. The Baud Rate Generator is used to time the period of a received 55h (ASCII "U") which is the Sync character for the LIN bus. The unique feature of this character is that it has five rising edges including the Stop bit edge.

Setting the ABDEN bit of the BAUDCON register starts the auto-baud calibration sequence. While the ABD sequence takes place, the EUSART state machine is held in Idle. On the first rising edge of the receive line, after the Start bit, the SPBRG begins counting up using the BRG counter clock as shown in Figure 29-6. The fifth rising edge will occur on the RX pin at the end of the eighth bit period. At that time, an accumulated value totaling the proper BRG period is left in the SPBRGH, SPBRGL register pair, the ABDEN bit is automatically cleared and the RCIF interrupt flag is set. The value in the RCREG needs to be read to clear the RCIF interrupt. RCREG content should be discarded. When calibrating for modes that do not use the SPBRGH register the user can verify that the SPBRGL register did not overflow by checking for 00h in the SPBRGH register.

The BRG auto-baud clock is determined by the BRG16 and BRGH bits as shown in Table 29-6. During ABD, both the SPBRGH and SPBRGL registers are used as a 16-bit counter, independent of the BRG16 bit setting. While calibrating the baud rate period, the SPBRGH and SPBRGL registers are clocked at 1/8th the BRG base clock rate. The resulting byte measurement is the average bit time when clocked at full speed.

**Note 1:** If the WUE bit is set with the ABDEN bit, auto-baud detection will occur on the byte following the Break character (see **Section 29.4.3 "Auto-Wake-up on Break"**).

**2:** It is up to the user to determine that the incoming character baud rate is within the range of the selected BRG clock source. Some combinations of oscillator frequency and EUSART baud rates are not possible.

**3:** During the auto-baud process, the auto-baud counter starts counting at one. Upon completion of the auto-baud sequence, to achieve maximum accuracy, subtract 1 from the SPBRGH:SPBRGL register pair.

**TABLE 29-6: BRG COUNTER CLOCK RATES**

| BRG16 | BRGH | BRG Base Clock | BRG ABD Clock |
|---|---|---|---|
| 0 | 0 | FOSC/64 | FOSC/512 |
| 0 | 1 | FOSC/16 | FOSC/128 |
| 1 | 0 | FOSC/16 | FOSC/128 |
| 1 | 1 | FOSC/4 | FOSC/32 |

**Note:** During the ABD sequence, SPBRGL and SPBRGH registers are both used as a 16-bit counter, independent of the BRG16 setting.

**FIGURE 29-6: AUTOMATIC BAUD RATE CALIBRATION**

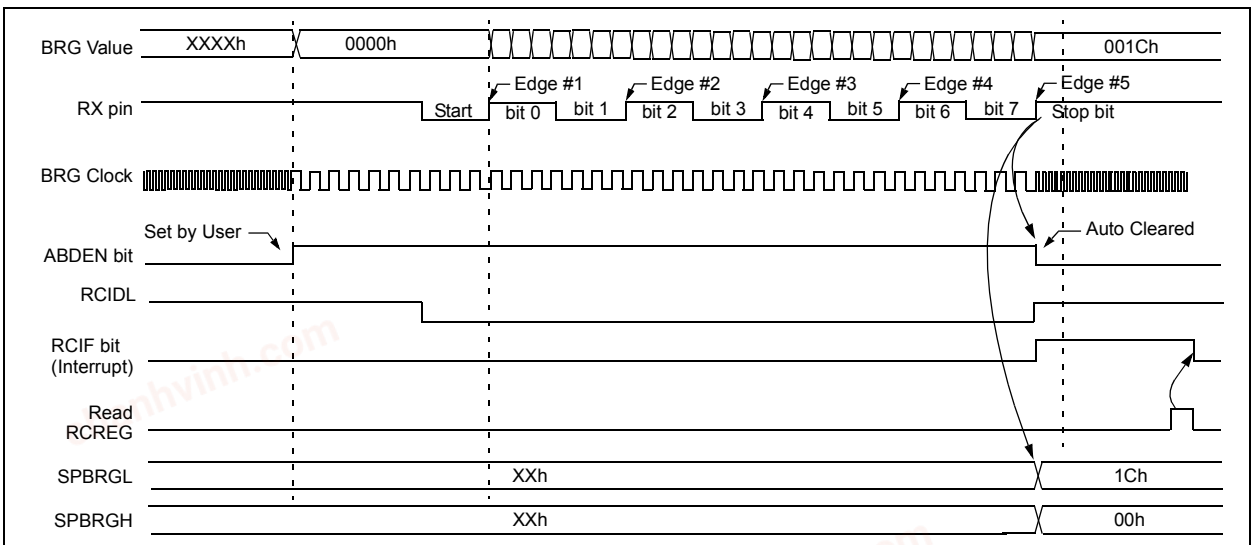


**Note 1:** The ABD sequence requires the **EUSART** module to be configured in Asynchronous mode.

chanhvinh.com



### 29.4.2 AUTO-BAUD OVERFLOW

During the course of automatic baud detection, the ABDOVF bit of the BAUDCON register will be set if the baud rate counter overflows before the fifth rising edge is detected on the RX pin. The ABDOVF bit indicates that the counter has exceeded the maximum count that can fit in the 16 bits of the SPBRGH:SPBRGL register pair. After the ABDOVF bit has been set, the counter continues to count until the fifth rising edge is detected on the RX pin. Upon detecting the fifth RX edge, the hardware will set the RCIF interrupt flag and clear the ABDEN bit of the BAUDCON register. The RCIF flag can be subsequently cleared by reading the RCREG register. The ABDOVF flag of the BAUDCON register can be cleared by software directly.

To terminate the auto-baud process before the RCIF flag is set, clear the ABDEN bit then clear the ABDOVF bit of the BAUDCON register. The ABDOVF bit will remain set if the ABDEN bit is not cleared first.

### 29.4.3 AUTO-WAKE-UP ON BREAK

During Sleep mode, all clocks to the EUSART are suspended. Because of this, the Baud Rate Generator is inactive and a proper character reception cannot be performed. The Auto-Wake-up feature allows the controller to wake-up due to activity on the RX/DT line. This feature is available only in Asynchronous mode.

The Auto-Wake-up feature is enabled by setting the WUE bit of the BAUDCON register. Once set, the normal receive sequence on RX/DT is disabled, and the EUSART remains in an Idle state, monitoring for a wake-up event independent of the CPU mode. A wake-up event consists of a high-to-low transition on the RX/DT line. (This coincides with the start of a Sync Break or a wake-up signal character for the LIN protocol.)

The EUSART module generates an RCIF interrupt coincident with the wake-up event. The interrupt is generated synchronously to the Q clocks in normal CPU operating modes (Figure 29-7), and asynchronously if the device is in Sleep mode (Figure 29-8). The interrupt condition is cleared by reading the RCREG register.

The WUE bit is automatically cleared by the low-to-high transition on the RX line at the end of the Break. This signals to the user that the Break event is over. At this point, the EUSART module is in Idle mode waiting to receive the next character.

#### 29.4.3.1 Special Considerations

Break Character

To avoid character errors or character fragments during a wake-up event, the wake-up character must be all zeros.

When the wake-up is enabled the function works independent of the low time on the data stream. If the WUE bit is set and a valid non-zero character is received, the low time from the Start bit to the first rising edge will be interpreted as the wake-up event. The remaining bits in the character will be received as a fragmented character and subsequent characters can result in framing or overrun errors.

Therefore, the initial character in the transmission must be all '0's. This must be ten or more bit times, 13-bit times recommended for LIN bus, or any number of bit times for standard RS-232 devices.

Oscillator Start-up Time

Oscillator start-up time must be considered, especially in applications using oscillators with longer start-up intervals (i.e., LP, XT or HS/PLL mode). The Sync Break (or wake-up signal) character must be of sufficient length, and be followed by a sufficient interval, to allow enough time for the selected oscillator to start and provide proper initialization of the EUSART.

WUE Bit

The wake-up event causes a receive interrupt by setting the RCIF bit. The WUE bit is cleared in hardware by a rising edge on RX/DT. The interrupt condition is then cleared in software by reading the RCREG register and discarding its contents.

To ensure that no actual data is lost, check the RCIDL bit to verify that a receive operation is not in process before setting the WUE bit. If a receive operation is not occurring, the WUE bit may then be set just prior to entering the Sleep mode.

 © 2013 Microchip Technology Inc.

chanhvinh.com



**FIGURE 29-7: AUTO-WAKE-UP BIT (WUE) TIMING DURING NORMAL OPERATION**

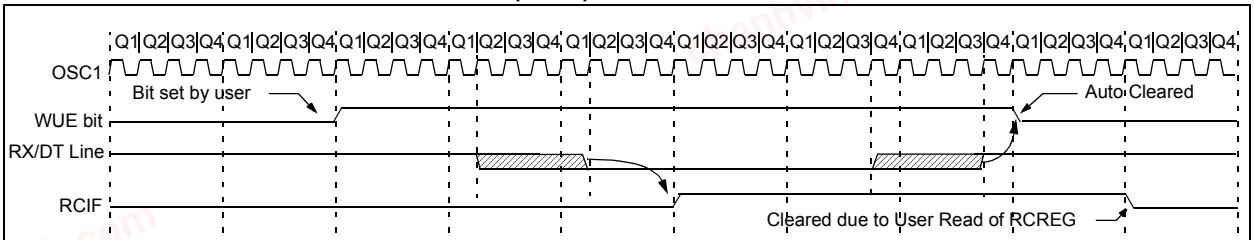


**Note 1:** The **EUSART** remains in Idle while the WUE bit is set.

**FIGURE 29-8: AUTO-WAKE-UP BIT (WUE) TIMINGS DURING SLEEP**

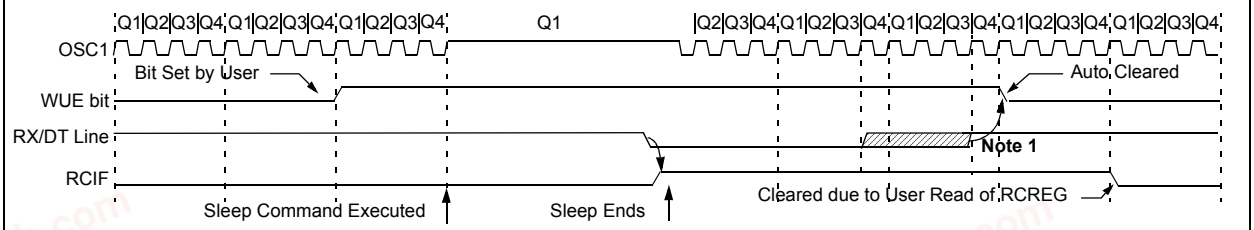


**Note 1:** If the wake-up event requires long oscillator warm-up time, the automatic clearing of the WUE bit can occur while the `stposc` signal is still active. This sequence should not depend on the presence of Q clocks.

**2:** The **EUSART** remains in Idle while the WUE bit is set.

chanhvinh.com



### 29.4.4 BREAK CHARACTER SEQUENCE

The EUSART module has the capability of sending the special Break character sequences that are required by the LIN bus standard. A Break character consists of a Start bit, followed by 12 '0' bits and a Stop bit.

To send a Break character, set the SENDB and TXEN bits of the TXSTA register. The Break character transmission is then initiated by a write to the TXREG. The value of data written to TXREG will be ignored and all '0's will be transmitted.

The SENDB bit is automatically reset by hardware after the corresponding Stop bit is sent. This allows the user to preload the transmit FIFO with the next transmit byte following the Break character (typically, the Sync character in the LIN specification).

The TRMT bit of the TXSTA register indicates when the transmit operation is active or idle, just as it does during normal transmission. See Figure 29-9 for the timing of the Break character sequence.

#### 29.4.4.1 Break and Sync Transmit Sequence

The following sequence will start a message frame header made up of a Break, followed by an auto-baud Sync byte. This sequence is typical of a LIN bus master.

1. Configure the EUSART for the desired mode.
2. Set the TXEN and SENDB bits to enable the Break sequence.
3. Load the TXREG with a dummy character to initiate transmission (the value is ignored).
4. Write '55h' to TXREG to load the Sync character into the transmit FIFO buffer.
5. After the Break has been sent, the SENDB bit is reset by hardware and the Sync character is then transmitted.

When the TXREG becomes empty, as indicated by the TXIF, the next data byte can be written to TXREG.

### 29.4.5 RECEIVING A BREAK CHARACTER

The Enhanced EUSART module can receive a Break character in two ways.

The first method to detect a Break character uses the FERR bit of the RCSTA register and the received data as indicated by RCREG. The Baud Rate Generator is assumed to have been initialized to the expected baud rate.

A Break character has been received when;

- RCIF bit is set
- FERR bit is set
- RCREG = 00h

The second method uses the Auto-Wake-up feature described in **Section 29.4.3 "Auto-Wake-up on Break"**. By enabling this feature, the EUSART will sample the next two transitions on RX/DT, cause an RCIF interrupt, and receive the next data byte followed by another interrupt.

Note that following a Break character, the user will typically want to enable the Auto-Baud Detect feature. For both methods, the user can set the ABDEN bit of the BAUDCON register before placing the EUSART in Sleep mode.

**FIGURE 29-9: SEND BREAK CHARACTER SEQUENCE**

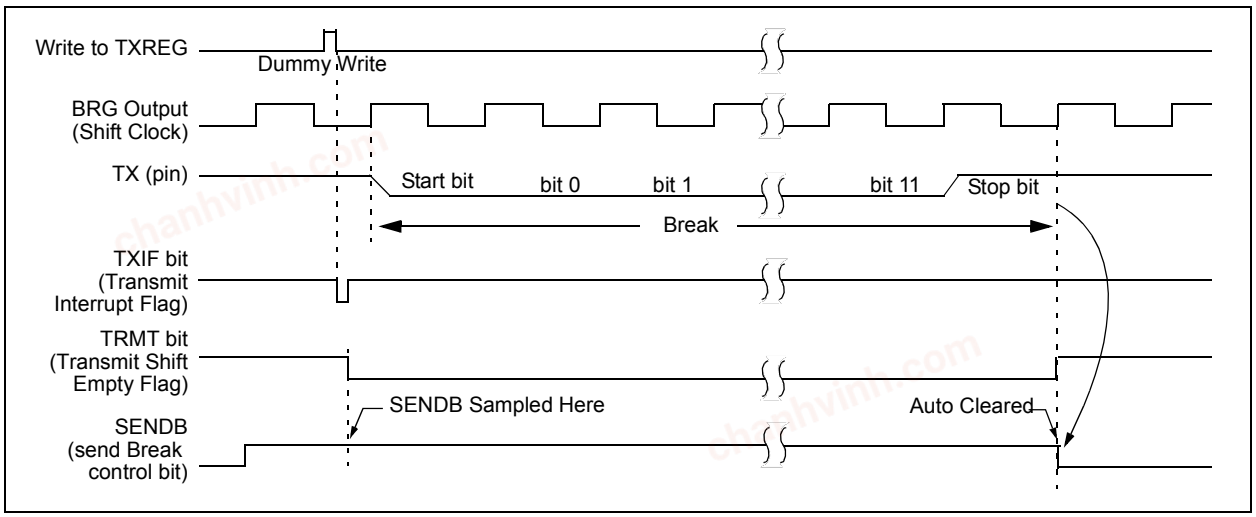


 © 2013 Microchip Technology Inc.

chanhvinh.com



## 29.5 EUSART Synchronous Mode

Synchronous serial communications are typically used in systems with a single master and one or more slaves. The master device contains the necessary circuitry for baud rate generation and supplies the clock for all devices in the system. Slave devices can take advantage of the master clock by eliminating the internal clock generation circuitry.

There are two signal lines in Synchronous mode: a bidirectional data line and a clock line. Slaves use the external clock supplied by the master to shift the serial data into and out of their respective receive and transmit shift registers. Since the data line is bidirectional, synchronous operation is half-duplex only. Half-duplex refers to the fact that master and slave devices can receive and transmit data but not both simultaneously. The EUSART can operate as either a master or slave device.

Start and Stop bits are not used in synchronous transmissions.

### 29.5.1 SYNCHRONOUS MASTER MODE

The following bits are used to configure the EUSART for synchronous master operation:

- SYNC = 1
- CSRC = 1
- SREN = 0 (for transmit); SREN = 1 (for receive)
- CREN = 0 (for transmit); CREN = 1 (for receive)
- SPEN = 1

Setting the SYNC bit of the TXSTA register configures the device for synchronous operation. Setting the CSRC bit of the TXSTA register configures the device as a master. Clearing the SREN and CREN bits of the RCSTA register ensures that the device is in the Transmit mode, otherwise the device will be configured to receive. Setting the SPEN bit of the RCSTA register enables the EUSART.

#### 29.5.1.1 Master Clock

Synchronous data transfers use a separate clock line, which is synchronous with the data. A device configured as a master transmits the clock on the TX/CK line. The TX/CK pin output driver is automatically enabled when the EUSART is configured for synchronous transmit or receive operation. Serial data bits change on the leading edge to ensure they are valid at the trailing edge of each clock. One clock cycle is generated for each data bit. Only as many clock cycles are generated as there are data bits.

#### 29.5.1.2 Clock Polarity

A clock polarity option is provided for Microwire compatibility. Clock polarity is selected with the SCKP bit of the BAUDCON register. Setting the SCKP bit sets the clock Idle state as high. When the SCKP bit is set, the data changes on the falling edge of each clock. Clearing the SCKP bit sets the Idle state as low. When the SCKP bit is cleared, the data changes on the rising edge of each clock.

#### 29.5.1.3 Synchronous Master Transmission

Data is transferred out of the device on the RX/DT pin. The RX/DT and TX/CK pin output drivers are automatically enabled when the EUSART is configured for synchronous master transmit operation.

A transmission is initiated by writing a character to the TXREG register. If the TSR still contains all or part of a previous character the new character data is held in the TXREG until the last bit of the previous character has been transmitted. If this is the first character, or the previous character has been completely flushed from the TSR, the data in the TXREG is immediately transferred to the TSR. The transmission of the character commences immediately following the transfer of the data to the TSR from the TXREG.

Each data bit changes on the leading edge of the master clock and remains valid until the subsequent leading clock edge.

| **Note:** | The TSR register is not mapped in data memory, so it is not available to the user. |
|---|---|

#### 29.5.1.4 Synchronous Master Transmission Set-up:

1. Initialize the SPBRGH, SPBRGL register pair and the BRGH and BRG16 bits to achieve the desired baud rate (see **Section 29.4 "EUSART Baud Rate Generator (BRG)"**).
2. Enable the synchronous master serial port by setting bits SYNC, SPEN and CSRC.
3. Disable Receive mode by clearing bits SREN and CREN.
4. Enable Transmit mode by setting the TXEN bit.
5. If 9-bit transmission is desired, set the TX9 bit.
6. If interrupts are desired, set the TXIE bit of the PIE1 register and the GIE and PEIE bits of the INTCON register.
7. If 9-bit transmission is selected, the ninth bit should be loaded in the TX9D bit.
8. Start transmission by loading data to the TXREG register.

chanhvinh.com



**FIGURE 29-10: SYNCHRONOUS TRANSMISSION**

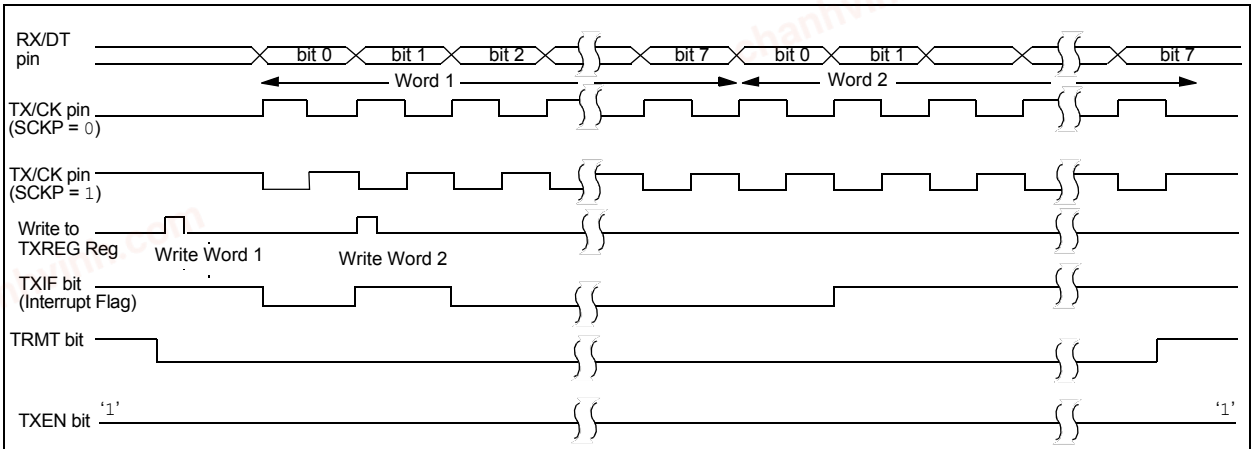


**Note:** Sync Master mode, SPBRGL = 0, continuous transmission of two 8-bit words.

**FIGURE 29-11: SYNCHRONOUS TRANSMISSION (THROUGH TXEN)**

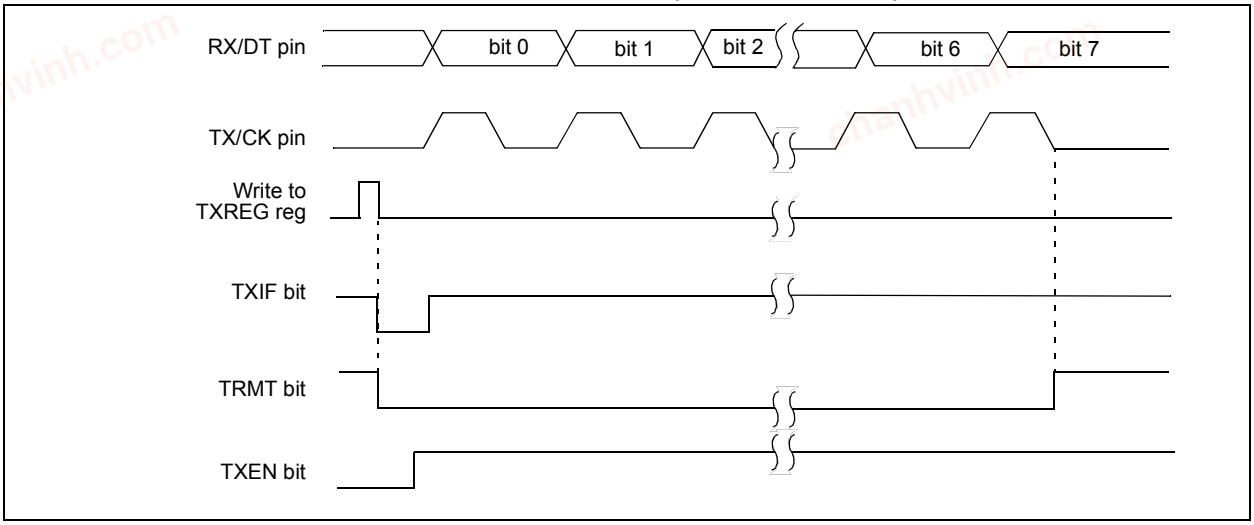



© 2013 Microchip Technology Inc.

chanhvinh.com



**TABLE 29-7: SUMMARY OF REGISTERS ASSOCIATED WITH SYNCHRONOUS MASTER TRANSMISSION**

| Name | Bit 7 | Bit 6 | Bit 5 | Bit 4 | Bit 3 | Bit 2 | Bit 1 | Bit 0 | Register on Page |
|---|---|---|---|---|---|---|---|---|---|
| ANSELA | — | — | — | ANSA4 | — | ANSA2 | ANSA1 | ANSA0 | 125 |
| ANSELB(1) | — | — | ANSB5 | ANSB4 | — | — | — | — | 131 |
| ANSELC | ANSC7(1) | ANSC6(1) | ANSC5(2) | ANSC4(2) | ANSC3 | ANSC2 | ANSC1 | ANSC0 | 136 |
| BAUD1CON | ABDOVF | RCIDL | — | SCKP | BRG16 | — | WUE | ABDEN | 349 |
| INTCON | GIE | PEIE | TMR0IE | INTE | IOCIE | TMR0IF | INTF | IOCIF | 86 |
| PIE1 | TMR1GIE | ADIE | RCIE | TXIE | SSP1IE | CCP1IE | TMR2IE | TMR1IE | 87 |
| PIR1 | TMR1GIF | ADIF | RCIF | TXIF | SSP1IF | CCP1IF | TMR2IF | TMR1IF | 90 |
| RC1STA | SPEN | RX9 | SREN | CREN | ADDEN | FERR | OERR | RX9D | 348 |
| RxyPPS | — | — | — | RxyPPS<4:0> | | | | | 143 |
| SP1BRGL | BRG<7:0> | | | | | | | | 350 |
| SP1BRGH | BRG<15:8> | | | | | | | | 350 |
| TRISA | — | — | TRISA5 | TRISA4 | —(3) | TRISA2 | TRISA1 | TRISA0 | 124 |
| TRISB(1) | TRISB7 | TRISB6 | TRISB5 | TRISB4 | — | — | — | — | 130 |
| TRISC | TRISC7(1) | TRISC6(1) | TRISC5 | TRISC4 | TRISC3 | TRISC2 | TRISC1 | TRISA0 | 135 |
| TX1REG | EUSART Transmit Data Register | | | | | | | | 339* |
| TX1STA | CSRC | TX9 | TXEN | SYNC | SENDB | BRGH | TRMT | TX9D | 347 |

**Legend:** — = unimplemented location, read as '0'. Shaded cells are not used for synchronous master transmission.
* Page provides register information.

**Note 1:** PIC16(L)F1708 only.
**2:** PIC16(L)F1704 only.
**3:** Unimplemented, read as '1'.

chanhvinh.com



#### 29.5.1.5 Synchronous Master Reception

Data is received at the RX/DT pin. The RX/DT pin output driver is automatically disabled when the EUSART is configured for synchronous master receive operation.

In Synchronous mode, reception is enabled by setting either the Single Receive Enable bit (SREN of the RCSTA register) or the Continuous Receive Enable bit (CREN of the RCSTA register).

When SREN is set and CREN is clear, only as many clock cycles are generated as there are data bits in a single character. The SREN bit is automatically cleared at the completion of one character. When CREN is set, clocks are continuously generated until CREN is cleared. If CREN is cleared in the middle of a character the CK clock stops immediately and the partial character is discarded. If SREN and CREN are both set, then SREN is cleared at the completion of the first character and CREN takes precedence.

To initiate reception, set either SREN or CREN. Data is sampled at the RX/DT pin on the trailing edge of the TX/CK clock pin and is shifted into the Receive Shift Register (RSR). When a complete character is received into the RSR, the RCIF bit is set and the character is automatically transferred to the two character receive FIFO. The Least Significant eight bits of the top character in the receive FIFO are available in RCREG. The RCIF bit remains set as long as there are unread characters in the receive FIFO.

| | |
|---|---|
| **Note:** | If the RX/DT function is on an analog pin, the corresponding ANSEL bit must be cleared for the receiver to function. |

#### 29.5.1.6 Slave Clock

Synchronous data transfers use a separate clock line, which is synchronous with the data. A device configured as a slave receives the clock on the TX/CK line. The TX/CK pin output driver is automatically disabled when the device is configured for synchronous slave transmit or receive operation. Serial data bits change on the leading edge to ensure they are valid at the trailing edge of each clock. One data bit is transferred for each clock cycle. Only as many clock cycles should be received as there are data bits.

| | |
|---|---|
| **Note:** | If the device is configured as a slave and the TX/CK function is on an analog pin, the corresponding ANSEL bit must be cleared. |

#### 29.5.1.7 Receive Overrun Error

The receive FIFO buffer can hold two characters. An overrun error will be generated if a third character, in its entirety, is received before RCREG is read to access the FIFO. When this happens the OERR bit of the RCSTA register is set. Previous data in the FIFO will not be overwritten. The two characters in the FIFO buffer can be read, however, no additional characters will be received until the error is cleared. The OERR bit can only be cleared by clearing the overrun condition. If the overrun error occurred when the SREN bit is set and CREN is clear then the error is cleared by reading RCREG. If the overrun occurred when the CREN bit is set then the error condition is cleared by either clearing the CREN bit of the RCSTA register or by clearing the SPEN bit which resets the EUSART.

#### 29.5.1.8 Receiving 9-bit Characters

The EUSART supports 9-bit character reception. When the RX9 bit of the RCSTA register is set the EUSART will shift nine bits into the RSR for each character received. The RX9D bit of the RCSTA register is the ninth, and Most Significant, data bit of the top unread character in the receive FIFO. When reading 9-bit data from the receive FIFO buffer, the RX9D data bit must be read before reading the eight Least Significant bits from the RCREG.

#### 29.5.1.9 Synchronous Master Reception Set-up:

1. Initialize the SPBRGH, SPBRGL register pair for the appropriate baud rate. Set or clear the BRGH and BRG16 bits, as required, to achieve the desired baud rate.
2. Clear the ANSEL bit for the RX pin (if applicable).
3. Enable the synchronous master serial port by setting bits SYNC, SPEN and CSRC.
4. Ensure bits CREN and SREN are clear.
5. If interrupts are desired, set the RCIE bit of the PIE1 register and the GIE and PEIE bits of the INTCON register.
6. If 9-bit reception is desired, set bit RX9.
7. Start reception by setting the SREN bit or for continuous reception, set the CREN bit.
8. Interrupt flag bit RCIF will be set when reception of a character is complete. An interrupt will be generated if the enable bit RCIE was set.
9. Read the RCSTA register to get the ninth bit (if enabled) and determine if any error occurred during reception.
10. Read the 8-bit received data by reading the RCREG register.
11. If an overrun error occurs, clear the error by either clearing the CREN bit of the RCSTA register or by clearing the SPEN bit which resets the EUSART.

 © 2013 Microchip Technology Inc.

chanhvinh.com



**FIGURE 29-12: SYNCHRONOUS RECEPTION (MASTER MODE, SREN)**

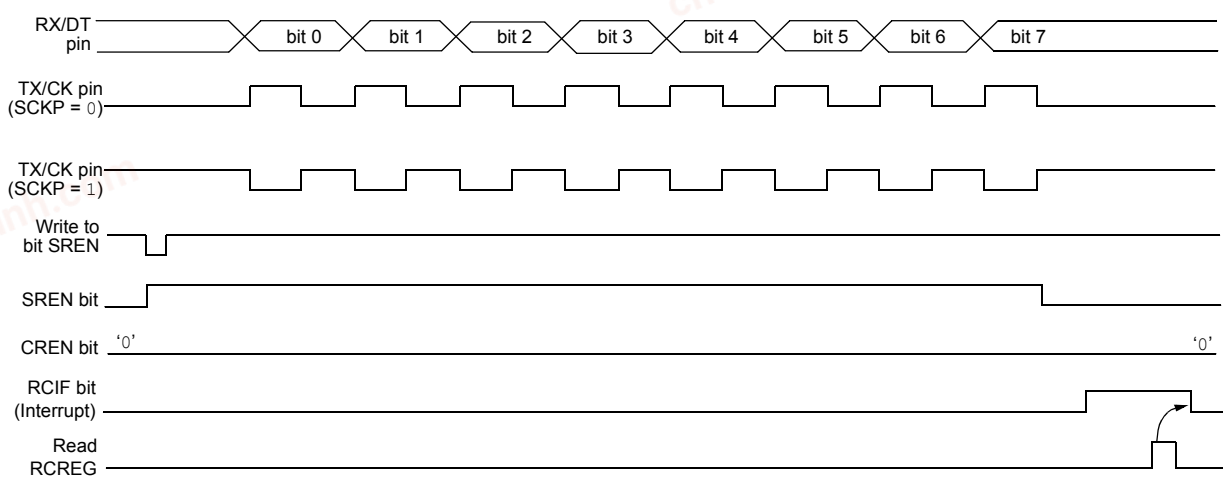


**Note:** Timing diagram demonstrates Sync Master mode with bit SREN = 1 and bit BRGH = 0.

**TABLE 29-8: SUMMARY OF REGISTERS ASSOCIATED WITH SYNCHRONOUS MASTER RECEPTION**

| Name | Bit 7 | Bit 6 | Bit 5 | Bit 4 | Bit 3 | Bit 2 | Bit 1 | Bit 0 | Register on Page |
|---|---|---|---|---|---|---|---|---|---|
| ANSELA | — | — | — | ANSA4 | — | ANSA2 | ANSA1 | ANSA0 | 125 |
| ANSELB(1) | — | — | ANSB5 | ANSB4 | — | — | — | — | 131 |
| ANSELC | ANSC7(1) | ANSC6(1) | ANSC5(2) | ANSC4(2) | ANSC3 | ANSC2 | ANSC1 | ANSC0 | 136 |
| BAUD1CON | ABDOVF | RCIDL | — | SCKP | BRG16 | — | WUE | ABDEN | 349 |
| CKPPS | — | — | — | CKPPS<4:0> | | | | | 141, 142 |
| INTCON | GIE | PEIE | TMR0IE | INTE | IOCIE | TMR0IF | INTF | IOCIF | 86 |
| PIE1 | TMR1GIE | ADIE | RCIE | TXIE | SSP1IE | CCP1IE | TMR2IE | TMR1IE | 87 |
| PIR1 | TMR1GIF | ADIF | RCIF | TXIF | SSP1IF | CCP1IF | TMR2IF | TMR1IF | 90 |
| RC1REG | EUSART Receive Data Register | | | | | | | | 342* |
| RC1STA | SPEN | RX9 | SREN | CREN | ADDEN | FERR | OERR | RX9D | 348 |
| RXPPS | — | — | — | RXPPS<4:0> | | | | | 141, 142 |
| RxyPPS | — | — | — | RxyPPS<4:0> | | | | | 143 |
| SP1BRGL | BRG<7:0> | | | | | | | | 350* |
| SP1BRGH | BRG<15:8> | | | | | | | | 350* |
| TRISA | — | — | TRISA5 | TRISA4 | —(3) | TRISA2 | TRISA1 | TRISA0 | 124 |
| TRISB(1) | TRISB7 | TRISB6 | TRISB5 | TRISB4 | — | — | — | — | 130 |
| TRISC | TRISC7(1) | TRISC6(1) | TRISC5 | TRISC4 | TRISC3 | TRISC2 | TRISC1 | TRISA0 | 135 |
| TX1STA | CSRC | TX9 | TXEN | SYNC | SENDB | BRGH | TRMT | TX9D | 347 |

**Legend:** — = unimplemented location, read as '0'. Shaded cells are not used for synchronous master reception.
* Page provides register information.

**Note 1:** PIC16(L)F1708 only.
**2:** PIC16(L)F1704 only.
**3:** Unimplemented, read as '1'.

chanhvinh.com



### 29.5.2 SYNCHRONOUS SLAVE MODE

The following bits are used to configure the EUSART for synchronous slave operation:

- SYNC = 1
- CSRC = 0
- SREN = 0 (for transmit); SREN = 1 (for receive)
- CREN = 0 (for transmit); CREN = 1 (for receive)
- SPEN = 1

Setting the SYNC bit of the TXSTA register configures the device for synchronous operation. Clearing the CSRC bit of the TXSTA register configures the device as a slave. Clearing the SREN and CREN bits of the RCSTA register ensures that the device is in the Transmit mode, otherwise the device will be configured to receive. Setting the SPEN bit of the RCSTA register enables the EUSART.

#### 29.5.2.1 EUSART Synchronous Slave Transmit

The operation of the Synchronous Master and Slave modes are identical (see **Section 29.5.1.3 "Synchronous Master Transmission"**), except in the case of the Sleep mode.

If two words are written to the TXREG and then the SLEEP instruction is executed, the following will occur:

1. The first character will immediately transfer to the TSR register and transmit.
2. The second word will remain in the TXREG register.
3. The TXIF bit will not be set.
4. After the first character has been shifted out of TSR, the TXREG register will transfer the second character to the TSR and the TXIF bit will now be set.
5. If the PEIE and TXIE bits are set, the interrupt will wake the device from Sleep and execute the next instruction. If the GIE bit is also set, the program will call the Interrupt Service Routine.

#### 29.5.2.2 Synchronous Slave Transmission Set-up:

1. Set the SYNC and SPEN bits and clear the CSRC bit.
2. Clear the ANSEL bit for the CK pin (if applicable).
3. Clear the CREN and SREN bits.
4. If interrupts are desired, set the TXIE bit of the PIE1 register and the GIE and PEIE bits of the INTCON register.
5. If 9-bit transmission is desired, set the TX9 bit.
6. Enable transmission by setting the TXEN bit.
7. If 9-bit transmission is selected, insert the Most Significant bit into the TX9D bit.
8. Start transmission by writing the Least Significant eight bits to the TXREG register.

 © 2013 Microchip Technology Inc.

chanhvinh.com



**TABLE 29-9: SUMMARY OF REGISTERS ASSOCIATED WITH SYNCHRONOUS SLAVE TRANSMISSION**

| Name | Bit 7 | Bit 6 | Bit 5 | Bit 4 | Bit 3 | Bit 2 | Bit 1 | Bit 0 | Register on Page |
|---|---|---|---|---|---|---|---|---|---|
| ANSELA | — | — | — | ANSA4 | — | ANSA2 | ANSA1 | ANSA0 | 125 |
| ANSELB(1) | — | — | ANSB5 | ANSB4 | — | — | — | — | 131 |
| ANSELC | ANSC7(1) | ANSC6(1) | ANSC5(2) | ANSC4(2) | ANSC3 | ANSC2 | ANSC1 | ANSC0 | 136 |
| BAUD1CON | ABDOVF | RCIDL | — | SCKP | BRG16 | — | WUE | ABDEN | 349 |
| CKPPS | — | — | — | CKPPS<4:0> | | | | | 141, 142 |
| INTCON | GIE | PEIE | TMR0IE | INTE | IOCIE | TMR0IF | INTF | IOCIF | 86 |
| PIE1 | TMR1GIE | ADIE | RCIE | TXIE | SSP1IE | CCP1IE | TMR2IE | TMR1IE | 87 |
| PIR1 | TMR1GIF | ADIF | RCIF | TXIF | SSP1IF | CCP1IF | TMR2IF | TMR1IF | 90 |
| RC1STA | SPEN | RX9 | SREN | CREN | ADDEN | FERR | OERR | RX9D | 348 |
| RXPPS | — | — | — | RXPPS<4:0> | | | | | 141, 142 |
| RxyPPS | — | — | — | RxyPPS<4:0> | | | | | 143 |
| TRISA | — | — | TRISA5 | TRISA4 | —(3) | TRISA2 | TRISA1 | TRISA0 | 124 |
| TRISB(1) | TRISB7 | TRISB6 | TRISB5 | TRISB4 | — | — | — | — | 130 |
| TRISC | TRISC7(1) | TRISC6(1) | TRISC5 | TRISC4 | TRISC3 | TRISC2 | TRISC1 | TRISA0 | 135 |
| TX1REG | EUSART Transmit Data Register | | | | | | | | 339* |
| TX1STA | CSRC | TX9 | TXEN | SYNC | SENDB | BRGH | TRMT | TX9D | 347 |

**Legend:** — = unimplemented location, read as '0'. Shaded cells are not used for synchronous slave transmission.

* Page provides register information.

**Note 1:** PIC16(L)F1708 only.

**2:** PIC16(L)F1704 only.

**3:** Unimplemented, read as '1'.

chanhvinh.com



### 29.5.2.3 EUSART Synchronous Slave Reception

The operation of the Synchronous Master and Slave modes is identical (**Section 29.5.1.5 "Synchronous Master Reception"**), with the following exceptions:

- Sleep
- CREN bit is always set, therefore the receiver is never idle
- SREN bit, which is a "don't care" in Slave mode

A character may be received while in Sleep mode by setting the CREN bit prior to entering Sleep. Once the word is received, the RSR register will transfer the data to the RCREG register. If the RCIE enable bit is set, the interrupt generated will wake the device from Sleep and execute the next instruction. If the GIE bit is also set, the program will branch to the interrupt vector.

### 29.5.2.4 Synchronous Slave Reception Set-up:

1. Set the SYNC and SPEN bits and clear the CSRC bit.
2. Clear the ANSEL bit for both the CK and DT pins (if applicable).
3. If interrupts are desired, set the RCIE bit of the PIE1 register and the GIE and PEIE bits of the INTCON register.
4. If 9-bit reception is desired, set the RX9 bit.
5. Set the CREN bit to enable reception.
6. The RCIF bit will be set when reception is complete. An interrupt will be generated if the RCIE bit was set.
7. If 9-bit mode is enabled, retrieve the Most Significant bit from the RX9D bit of the RCSTA register.
8. Retrieve the eight Least Significant bits from the receive FIFO by reading the RCREG register.
9. If an overrun error occurs, clear the error by either clearing the CREN bit of the RCSTA register or by clearing the SPEN bit which resets the EUSART.

**TABLE 29-10: SUMMARY OF REGISTERS ASSOCIATED WITH SYNCHRONOUS SLAVE RECEPTION**

| Name | Bit 7 | Bit 6 | Bit 5 | Bit 4 | Bit 3 | Bit 2 | Bit 1 | Bit 0 | Register on Page |
|---|---|---|---|---|---|---|---|---|---|
| ANSELA | — | — | — | ANSA4 | — | ANSA2 | ANSA1 | ANSA0 | 125 |
| ANSELB(1) | — | — | ANSB5 | ANSB4 | — | — | — | — | 131 |
| ANSELC | ANSC7(1) | ANSC6(1) | ANSC5(2) | ANSC4(2) | ANSC3 | ANSC2 | ANSC1 | ANSC0 | 136 |
| BAUD1CON | ABDOVF | RCIDL | — | SCKP | BRG16 | — | WUE | ABDEN | 349 |
| CKPPS | — | — | — | CKPPS<4:0> | | | | | 141, 142 |
| INTCON | GIE | PEIE | TMR0IE | INTE | IOCIE | TMR0IF | INTF | IOCIF | 86 |
| PIE1 | TMR1GIE | ADIE | RCIE | TXIE | SSP1IE | CCP1IE | TMR2IE | TMR1IE | 87 |
| PIR1 | TMR1GIF | ADIF | RCIF | TXIF | SSP1IF | CCP1IF | TMR2IF | TMR1IF | 90 |
| RC1REG | EUSART Receive Data Register | | | | | | | | 342* |
| RC1STA | SPEN | RX9 | SREN | CREN | ADDEN | FERR | OERR | RX9D | 348 |
| RXPPS | — | — | — | RXPPS<4:0> | | | | | 141, 142 |
| TRISA | — | — | TRISA5 | TRISA4 | —(3) | TRISA2 | TRISA1 | TRISA0 | 124 |
| TRISB(1) | TRISB7 | TRISB6 | TRISB5 | TRISB4 | — | — | — | — | 130 |
| TRISC | TRISC7(1) | TRISC6(1) | TRISC5 | TRISC4 | TRISC3 | TRISC2 | TRISC1 | TRISA0 | 135 |
| TX1STA | CSRC | TX9 | TXEN | SYNC | SENDB | BRGH | TRMT | TX9D | 347 |

**Legend:** — = unimplemented location, read as '0'. Shaded cells are not used for synchronous slave reception.
* Page provides register information.

**Note 1:** PIC16(L)F1708 only.
**2:** PIC16(L)F1704 only.
**3:** Unimplemented, read as '1'.

 © 2013 Microchip Technology Inc.

chanhvinh.com



## 29.6 EUSART Operation During Sleep

The EUSART will remain active during Sleep only in the Synchronous Slave mode. All other modes require the system clock and therefore cannot generate the necessary signals to run the Transmit or Receive Shift registers during Sleep.

Synchronous Slave mode uses an externally generated clock to run the Transmit and Receive Shift registers.

### 29.6.1 SYNCHRONOUS RECEIVE DURING SLEEP

To receive during Sleep, all the following conditions must be met before entering Sleep mode:

- RCSTA and TXSTA Control registers must be configured for Synchronous Slave Reception (see **Section 29.5.2.4 "Synchronous Slave Reception Set-up:"**).
- If interrupts are desired, set the RCIE bit of the PIE1 register and the GIE and PEIE bits of the INTCON register.
- The RCIF interrupt flag must be cleared by reading RCREG to unload any pending characters in the receive buffer.

Upon entering Sleep mode, the device will be ready to accept data and clocks on the RX/DT and TX/CK pins, respectively. When the data word has been completely clocked in by the external device, the RCIF interrupt flag bit of the PIR1 register will be set. Thereby, waking the processor from Sleep.

Upon waking from Sleep, the instruction following the `SLEEP` instruction will be executed. If the Global Interrupt Enable (GIE) bit of the INTCON register is also set, then the Interrupt Service Routine at address 004h will be called.

### 29.6.2 SYNCHRONOUS TRANSMIT DURING SLEEP

To transmit during Sleep, all the following conditions must be met before entering Sleep mode:

- The RCSTA and TXSTA Control registers must be configured for synchronous slave transmission (see **Section 29.5.2.2 "Synchronous Slave Transmission Set-up:"**).
- The TXIF interrupt flag must be cleared by writing the output data to the TXREG, thereby filling the TSR and transmit buffer.
- If interrupts are desired, set the TXIE bit of the PIE1 register and the PEIE bit of the INTCON register.
- Interrupt enable bits TXIE of the PIE1 register and PEIE of the INTCON register must set.

Upon entering Sleep mode, the device will be ready to accept clocks on TX/CK pin and transmit data on the RX/DT pin. When the data word in the TSR has been completely clocked out by the external device, the pending byte in the TXREG will transfer to the TSR and the TXIF flag will be set. Thereby, waking the processor from Sleep. At this point, the TXREG is available to accept another character for transmission, which will clear the TXIF flag.

Upon waking from Sleep, the instruction following the `SLEEP` instruction will be executed. If the Global Interrupt Enable (GIE) bit is also set then the Interrupt Service Routine at address 0004h will be called.

chanhvinh.com



**NOTES:**

chanhvinh.com

 © 2013 Microchip Technology Inc.

chanhvinh.com



## 30.0 IN-CIRCUIT SERIAL PROGRAMMING™ (ICSP™)

ICSP™ programming allows customers to manufacture circuit boards with unprogrammed devices. Programming can be done after the assembly process, allowing the device to be programmed with the most recent firmware or a custom firmware. Five pins are needed for ICSP™ programming:

- ICSPCLK
- ICSPDAT
- $\overline{\text{MCLR}}$/VPP
- VDD
- VSS

In Program/Verify mode the program memory, user IDs and the Configuration Words are programmed through serial communications. The ICSPDAT pin is a bidirectional I/O used for transferring the serial data and the ICSPCLK pin is the clock input. For more information on ICSP™ refer to the **"***PIC16(L)F170X Memory Programming Specification***"** (DS41683).

## 30.1 High-Voltage Programming Entry Mode

The device is placed into High-Voltage Programming Entry mode by holding the ICSPCLK and ICSPDAT pins low then raising the voltage on $\overline{\text{MCLR}}$/VPP to VIHH.

## 30.2 Low-Voltage Programming Entry Mode

The Low-Voltage Programming Entry mode allows the PIC® Flash MCUs to be programmed using VDD only, without high voltage. When the LVP bit of Configuration Words is set to '1', the low-voltage ICSP programming entry is enabled. To disable the Low-Voltage ICSP mode, the LVP bit must be programmed to '0'.

Entry into the Low-Voltage Programming Entry mode requires the following steps:

1. $\overline{\text{MCLR}}$ is brought to VIL.
2. A 32-bit key sequence is presented on ICSPDAT, while clocking ICSPCLK.

Once the key sequence is complete, $\overline{\text{MCLR}}$ must be held at VIL for as long as Program/Verify mode is to be maintained.

If low-voltage programming is enabled (LVP = 1), the $\overline{\text{MCLR}}$ Reset function is automatically enabled and cannot be disabled. See **Section 5.5 "MCLR"** for more information.

The LVP bit can only be reprogrammed to '0' by using the High-Voltage Programming mode.

## 30.3 Common Programming Interfaces

Connection to a target device is typically done through an ICSP™ header. A commonly found connector on development tools is the RJ-11 in the 6P6C (6-pin, 6-connector) configuration. See Figure 30-1.

**FIGURE 30-1: ICD RJ-11 STYLE CONNECTOR INTERFACE**

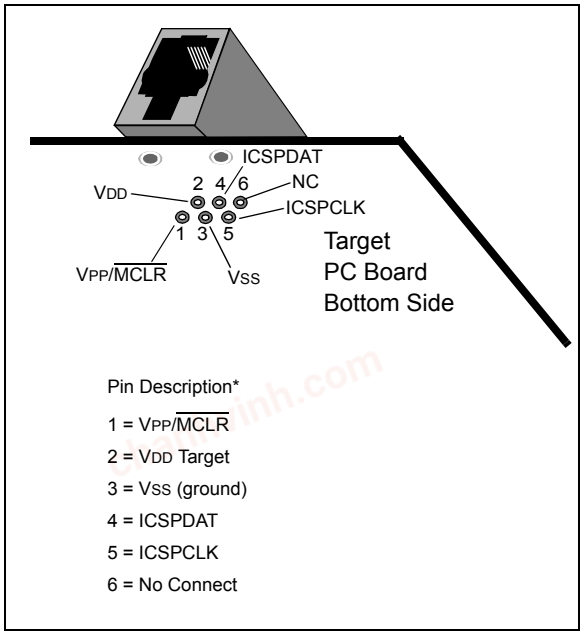


Another connector often found in use with the PICkit™ programmers is a standard 6-pin header with 0.1 inch spacing. Refer to Figure 30-2.

For additional interface recommendations, refer to your specific device programmer manual prior to PCB design.

It is recommended that isolation devices be used to separate the programming pins from other circuitry. The type of isolation is highly dependent on the specific application and may include devices such as resistors, diodes, or even jumpers. See Figure 30-3 for more information.

chanhvinh.com



**FIGURE 30-2: PICkit™ PROGRAMMER STYLE CONNECTOR INTERFACE**

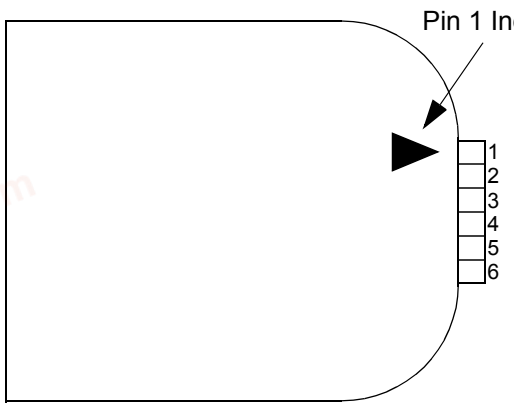


Pin Description*

1 = VPP/$\overline{\text{MCLR}}$
2 = VDD Target
3 = VSS (ground)
4 = ICSPDAT
5 = ICSPCLK
6 = No Connect

* The 6-pin header (0.100" spacing) accepts 0.025" square pins.

**FIGURE 30-3: TYPICAL CONNECTION FOR ICSP™ PROGRAMMING**

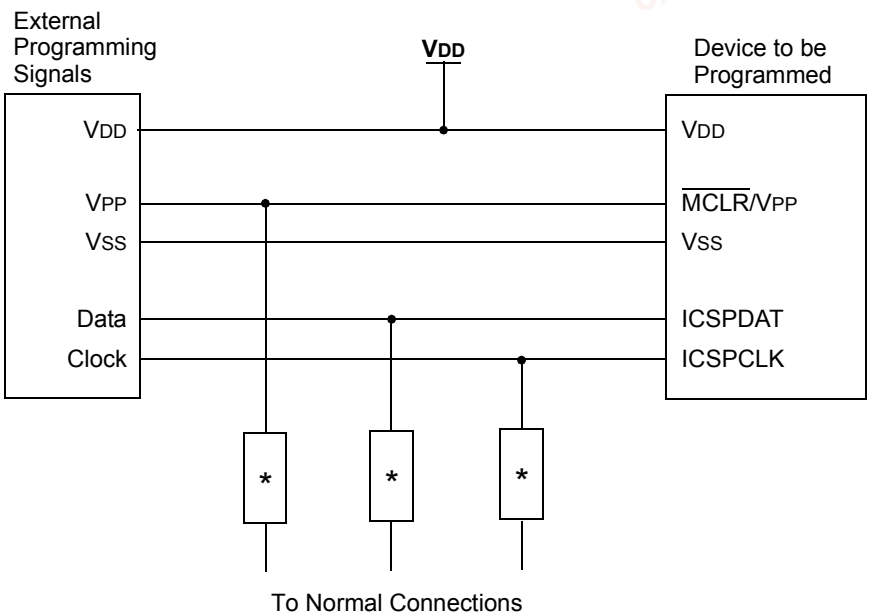


* Isolation devices (as required).

 © 2013 Microchip Technology Inc.

chanhvinh.com



## 31.0 INSTRUCTION SET SUMMARY

Each instruction is a 14-bit word containing the operation code (opcode) and all required operands. The opcodes are broken into three broad categories.

- Byte Oriented
- Bit Oriented
- Literal and Control

The literal and control category contains the most varied instruction word format.

Table 31-3 lists the instructions recognized by the MPASM™ assembler.

All instructions are executed within a single instruction cycle, with the following exceptions, which may take two or three cycles:

- Subroutine takes two cycles (CALL, CALLW)
- Returns from interrupts or subroutines take two cycles (RETURN, RETLW, RETFIE)
- Program branching takes two cycles (GOTO, BRA, BRW, BTFSS, BTFSC, DECFSZ, INCSFZ)
- One additional instruction cycle will be used when any instruction references an indirect file register and the file select register is pointing to program memory.

One instruction cycle consists of 4 oscillator cycles; for an oscillator frequency of 4 MHz, this gives a nominal instruction execution rate of 1 MHz.

All instruction examples use the format '0xhh' to represent a hexadecimal number, where 'h' signifies a hexadecimal digit.

### 31.1 Read-Modify-Write Operations

Any instruction that specifies a file register as part of the instruction performs a Read-Modify-Write (R-M-W) operation. The register is read, the data is modified, and the result is stored according to either the instruction, or the destination designator 'd'. A read operation is performed on a register even if the instruction writes to that register.

**TABLE 31-1: OPCODE FIELD DESCRIPTIONS**

| Field | Description |
|---|---|
| f | Register file address (0x00 to 0x7F) |
| W | Working register (accumulator) |
| b | Bit address within an 8-bit file register |
| k | Literal field, constant data or label |
| x | Don't care location (= 0 or 1).<br>The assembler will generate code with x = 0.<br>It is the recommended form of use for compatibility with all Microchip software tools. |
| d | Destination select; d = 0: store result in W,<br>d = 1: store result in file register f.<br>Default is d = 1. |
| n | FSR or INDF number. (0-1) |
| mm | Pre-post increment-decrement mode selection |

**TABLE 31-2: ABBREVIATION DESCRIPTIONS**

| Field | Description |
|---|---|
| PC | Program Counter |
| $\overline{TO}$ | Time-Out bit |
| C | Carry bit |
| DC | Digit Carry bit |
| Z | Zero bit |
| $\overline{PD}$ | Power-Down bit |

chanhvinh.com



**FIGURE 31-1: GENERAL FORMAT FOR INSTRUCTIONS**

**Byte-oriented file register operations**

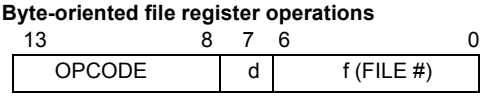


d = 0 for destination W
d = 1 for destination f
f = 7-bit file register address

**Bit-oriented file register operations**

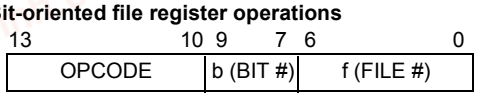


b = 3-bit bit address
f = 7-bit file register address

**Literal and control operations**

General

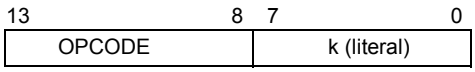


k = 8-bit immediate value

CALL and GOTO instructions only

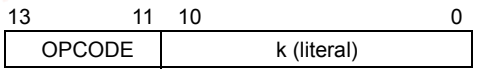


k = 11-bit immediate value

MOVLP instruction only

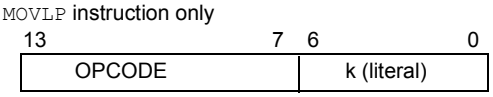


k = 7-bit immediate value

MOVLB instruction only

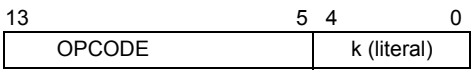


k = 5-bit immediate value

BRA instruction only

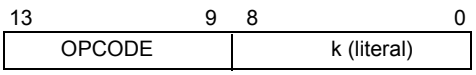


k = 9-bit immediate value

FSR Offset instructions

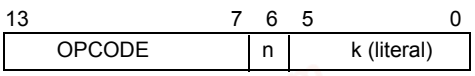


n = appropriate FSR
k = 6-bit immediate value

FSR Increment instructions

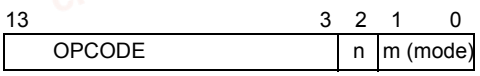


n = appropriate FSR
m = 2-bit mode value

OPCODE only

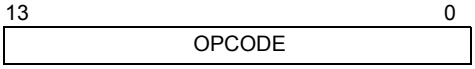


 © 2013 Microchip Technology Inc.

chanhvinh.com



**TABLE 31-3: PIC16(L)F1704/8 INSTRUCTION SET**

| Mnemonic, Operands | | Description | Cycles | 14-Bit Opcode MSb | | | LSb | Status Affected | Notes |
|---|---|---|---|---|---|---|---|---|---|
| **BYTE-ORIENTED FILE REGISTER OPERATIONS** | | | | | | | | | |
| ADDWF | f, d | Add W and f | 1 | 00 | 0111 | dfff | ffff | C, DC, Z | 2 |
| ADDWFC | f, d | Add with Carry W and f | 1 | 11 | 1101 | dfff | ffff | C, DC, Z | 2 |
| ANDWF | f, d | AND W with f | 1 | 00 | 0101 | dfff | ffff | Z | 2 |
| ASRF | f, d | Arithmetic Right Shift | 1 | 11 | 0111 | dfff | ffff | C, Z | 2 |
| LSLF | f, d | Logical Left Shift | 1 | 11 | 0101 | dfff | ffff | C, Z | 2 |
| LSRF | f, d | Logical Right Shift | 1 | 11 | 0110 | dfff | ffff | C, Z | 2 |
| CLRF | f | Clear f | 1 | 00 | 0001 | lfff | ffff | Z | 2 |
| CLRW | – | Clear W | 1 | 00 | 0001 | 0000 | 00xx | Z | |
| COMF | f, d | Complement f | 1 | 00 | 1001 | dfff | ffff | Z | 2 |
| DECF | f, d | Decrement f | 1 | 00 | 0011 | dfff | ffff | Z | 2 |
| INCF | f, d | Increment f | 1 | 00 | 1010 | dfff | ffff | Z | 2 |
| IORWF | f, d | Inclusive OR W with f | 1 | 00 | 0100 | dfff | ffff | Z | 2 |
| MOVF | f, d | Move f | 1 | 00 | 1000 | dfff | ffff | Z | 2 |
| MOVWF | f | Move W to f | 1 | 00 | 0000 | 1fff | ffff | | 2 |
| RLF | f, d | Rotate Left f through Carry | 1 | 00 | 1101 | dfff | ffff | C | 2 |
| RRF | f, d | Rotate Right f through Carry | 1 | 00 | 1100 | dfff | ffff | C | 2 |
| SUBWF | f, d | Subtract W from f | 1 | 00 | 0010 | dfff | ffff | C, DC, Z | 2 |
| SUBWFB | f, d | Subtract with Borrow W from f | 1 | 11 | 1011 | dfff | ffff | C, DC, Z | 2 |
| SWAPF | f, d | Swap nibbles in f | 1 | 00 | 1110 | dfff | ffff | | 2 |
| XORWF | f, d | Exclusive OR W with f | 1 | 00 | 0110 | dfff | ffff | Z | 2 |
| **BYTE ORIENTED SKIP OPERATIONS** | | | | | | | | | |
| DECFSZ | f, d | Decrement f, Skip if 0 | 1(2) | 00 | 1011 | dfff | ffff | | 1, 2 |
| INCFSZ | f, d | Increment f, Skip if 0 | 1(2) | 00 | 1111 | dfff | ffff | | 1, 2 |
| **BIT-ORIENTED FILE REGISTER OPERATIONS** | | | | | | | | | |
| BCF | f, b | Bit Clear f | 1 | 01 | 00bb | bfff | ffff | | 2 |
| BSF | f, b | Bit Set f | 1 | 01 | 01bb | bfff | ffff | | 2 |
| **BIT-ORIENTED SKIP OPERATIONS** | | | | | | | | | |
| BTFSC | f, b | Bit Test f, Skip if Clear | 1 (2) | 01 | 10bb | bfff | ffff | | 1, 2 |
| BTFSS | f, b | Bit Test f, Skip if Set | 1 (2) | 01 | 11bb | bfff | ffff | | 1, 2 |
| **LITERAL OPERATIONS** | | | | | | | | | |
| ADDLW | k | Add literal and W | 1 | 11 | 1110 | kkkk | kkkk | C, DC, Z | |
| ANDLW | k | AND literal with W | 1 | 11 | 1001 | kkkk | kkkk | Z | |
| IORLW | k | Inclusive OR literal with W | 1 | 11 | 1000 | kkkk | kkkk | Z | |
| MOVLB | k | Move literal to BSR | 1 | 00 | 0000 | 001k | kkkk | | |
| MOVLP | k | Move literal to PCLATH | 1 | 11 | 0001 | 1kkk | kkkk | | |
| MOVLW | k | Move literal to W | 1 | 11 | 0000 | kkkk | kkkk | | |
| SUBLW | k | Subtract W from literal | 1 | 11 | 1100 | kkkk | kkkk | C, DC, Z | |
| XORLW | k | Exclusive OR literal with W | 1 | 11 | 1010 | kkkk | kkkk | Z | |

**Note 1:** If the Program Counter (PC) is modified, or a conditional test is true, the instruction requires two cycles. The second cycle is executed as a NOP.

**2:** If this instruction addresses an INDF register and the MSb of the corresponding FSR is set, this instruction will require one additional instruction cycle.

chanhvinh.com



**TABLE 31-3: PIC16(L)F1704/8 INSTRUCTION SET (CONTINUED)**

| Mnemonic, Operands | | Description | Cycles | 14-Bit Opcode MSb LSb | Status Affected | Notes |
|---|---|---|---|---|---|---|
| **CONTROL OPERATIONS** | | | | | | |
| BRA | k | Relative Branch | 2 | 11 001k kkkk kkkk | | |
| BRW | – | Relative Branch with W | 2 | 00 0000 0000 1011 | | |
| CALL | k | Call Subroutine | 2 | 10 0kkk kkkk kkkk | | |
| CALLW | – | Call Subroutine with W | 2 | 00 0000 0000 1010 | | |
| GOTO | k | Go to address | 2 | 10 1kkk kkkk kkkk | | |
| RETFIE | k | Return from interrupt | 2 | 00 0000 0000 1001 | | |
| RETLW | k | Return with literal in W | 2 | 11 0100 kkkk kkkk | | |
| RETURN | – | Return from Subroutine | 2 | 00 0000 0000 1000 | | |
| **INHERENT OPERATIONS** | | | | | | |
| CLRWDT | – | Clear Watchdog Timer | 1 | 00 0000 0110 0100 | $\overline{TO}$, $\overline{PD}$ | |
| NOP | – | No Operation | 1 | 00 0000 0000 0000 | | |
| OPTION | – | Load OPTION_REG register with W | 1 | 00 0000 0110 0010 | | |
| RESET | – | Software device Reset | 1 | 00 0000 0000 0001 | | |
| SLEEP | – | Go into Standby mode | 1 | 00 0000 0110 0011 | $\overline{TO}$, $\overline{PD}$ | |
| TRIS | f | Load TRIS register with W | 1 | 00 0000 0110 0fff | | |
| **C-COMPILER OPTIMIZED** | | | | | | |
| ADDFSR | n, k | Add Literal k to FSRn | 1 | 11 0001 0nkk kkkk | | |
| MOVIW | n mm | Move Indirect FSRn to W with pre/post inc/dec modifier, mm | 1 | 00 0000 0001 0nmm | Z | **2, 3** |
| | k[n] | Move INDFn to W, Indexed Indirect. | 1 | 11 1111 0nkk kkkk | Z | **2** |
| MOVWI | n mm | Move W to Indirect FSRn with pre/post inc/dec modifier, mm | 1 | 00 0000 0001 1nmm | | **2, 3** |
| | k[n] | Move W to INDFn, Indexed Indirect. | 1 | 11 1111 1nkk kkkk | | **2** |

**Note 1:** If the Program Counter (PC) is modified, or a conditional test is true, the instruction requires two cycles. The second cycle is executed as a NOP.

**2:** If this instruction addresses an INDF register and the MSb of the corresponding FSR is set, this instruction will require one additional instruction cycle.

**3:** See Table in the MOVIW and MOVWI instruction descriptions.

 © 2013 Microchip Technology Inc.

chanhvinh.com



## 31.2 Instruction Descriptions

**ADDFSR — Add Literal to FSRn**

Syntax: [ *label* ] ADDFSR FSRn, k

Operands: -32 ≤ k ≤ 31
n ∈ [ 0, 1]

Operation: FSR(n) + k → FSR(n)

Status Affected: None

Description: The signed 6-bit literal 'k' is added to the contents of the FSRnH:FSRnL register pair.

FSRn is limited to the range 0000h-FFFFh. Moving beyond these bounds will cause the FSR to wrap-around.

**ADDLW — Add literal and W**

Syntax: [ *label* ] ADDLW k

Operands: 0 ≤ k ≤ 255

Operation: (W) + k → (W)

Status Affected: C, DC, Z

Description: The contents of the W register are added to the 8-bit literal 'k' and the result is placed in the W register.

**ADDWF — Add W and f**

Syntax: [ *label* ] ADDWF f,d

Operands: 0 ≤ f ≤ 127
d ∈ [0,1]

Operation: (W) + (f) → (destination)

Status Affected: C, DC, Z

Description: Add the contents of the W register with register 'f'. If 'd' is '0', the result is stored in the W register. If 'd' is '1', the result is stored back in register 'f'.

**ADDWFC — ADD W and CARRY bit to f**

Syntax: [ *label* ] ADDWFC f {,d}

Operands: 0 ≤ f ≤ 127
d ∈ [0,1]

Operation: (W) + (f) + (C) → dest

Status Affected: C, DC, Z

Description: Add W, the Carry flag and data memory location 'f'. If 'd' is '0', the result is placed in W. If 'd' is '1', the result is placed in data memory location 'f'.

**ANDLW — AND literal with W**

Syntax: [ *label* ] ANDLW k

Operands: 0 ≤ k ≤ 255

Operation: (W) .AND. (k) → (W)

Status Affected: Z

Description: The contents of W register are AND'ed with the 8-bit literal 'k'. The result is placed in the W register.

**ANDWF — AND W with f**

Syntax: [ *label* ] ANDWF f,d

Operands: 0 ≤ f ≤ 127
d ∈ [0,1]

Operation: (W) .AND. (f) → (destination)

Status Affected: Z

Description: AND the W register with register 'f'. If 'd' is '0', the result is stored in the W register. If 'd' is '1', the result is stored back in register 'f'.

**ASRF — Arithmetic Right Shift**

Syntax: [ *label* ] ASRF f {,d}

Operands: 0 ≤ f ≤ 127
d ∈ [0,1]

Operation: (f<7>)→ dest<7>
(f<7:1>) → dest<6:0>,
(f<0>) → C,

Status Affected: C, Z

Description: The contents of register 'f' are shifted one bit to the right through the Carry flag. The MSb remains unchanged. If 'd' is '0', the result is placed in W. If 'd' is '1', the result is stored back in register 'f'.

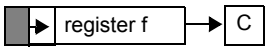

chanhvinh.com



**BCF** **Bit Clear f**

| | |
|---|---|
| Syntax: | [ *label* ] BCF f,b |
| Operands: | 0 ≤ f ≤ 127<br>0 ≤ b ≤ 7 |
| Operation: | 0 → (f<b>) |
| Status Affected: | None |
| Description: | Bit 'b' in register 'f' is cleared. |

**BRA** **Relative Branch**

| | |
|---|---|
| Syntax: | [ *label* ] BRA label<br>[ *label* ] BRA $+k |
| Operands: | -256 ≤ label - PC + 1 ≤ 255<br>-256 ≤ k ≤ 255 |
| Operation: | (PC) + 1 + k → PC |
| Status Affected: | None |
| Description: | Add the signed 9-bit literal 'k' to the PC. Since the PC will have incremented to fetch the next instruction, the new address will be PC + 1 + k. This instruction is a 2-cycle instruction. This branch has a limited range. |

**BRW** **Relative Branch with W**

| | |
|---|---|
| Syntax: | [ *label* ] BRW |
| Operands: | None |
| Operation: | (PC) + (W) → PC |
| Status Affected: | None |
| Description: | Add the contents of W (unsigned) to the PC. Since the PC will have incremented to fetch the next instruction, the new address will be PC + 1 + (W). This instruction is a 2-cycle instruction. |

**BSF** **Bit Set f**

| | |
|---|---|
| Syntax: | [ *label* ] BSF f,b |
| Operands: | 0 ≤ f ≤ 127<br>0 ≤ b ≤ 7 |
| Operation: | 1 → (f<b>) |
| Status Affected: | None |
| Description: | Bit 'b' in register 'f' is set. |

**BTFSC** **Bit Test f, Skip if Clear**

| | |
|---|---|
| Syntax: | [ *label* ] BTFSC f,b |
| Operands: | 0 ≤ f ≤ 127<br>0 ≤ b ≤ 7 |
| Operation: | skip if (f<b>) = 0 |
| Status Affected: | None |
| Description: | If bit 'b' in register 'f' is '1', the next instruction is executed.<br>If bit 'b', in register 'f', is '0', the next instruction is discarded, and a NOP is executed instead, making this a 2-cycle instruction. |

**BTFSS** **Bit Test f, Skip if Set**

| | |
|---|---|
| Syntax: | [ *label* ] BTFSS f,b |
| Operands: | 0 ≤ f ≤ 127<br>0 ≤ b < 7 |
| Operation: | skip if (f<b>) = 1 |
| Status Affected: | None |
| Description: | If bit 'b' in register 'f' is '0', the next instruction is executed.<br>If bit 'b' is '1', then the next instruction is discarded and a NOP is executed instead, making this a 2-cycle instruction. |

 © 2013 Microchip Technology Inc.

chanhvinh.com



**CALL** **Call Subroutine**

| | |
|---|---|
| Syntax: | [ *label* ] CALL k |
| Operands: | 0 ≤ k ≤ 2047 |
| Operation: | (PC)+ 1→ TOS,<br>k → PC<10:0>,<br>(PCLATH<6:3>) → PC<14:11> |
| Status Affected: | None |
| Description: | Call Subroutine. First, return address (PC + 1) is pushed onto the stack. The 11-bit immediate address is loaded into PC bits <10:0>. The upper bits of the PC are loaded from PCLATH. CALL is a 2-cycle instruction. |

**CALLW** **Subroutine Call With W**

| | |
|---|---|
| Syntax: | [ *label* ] CALLW |
| Operands: | None |
| Operation: | (PC) +1 → TOS,<br>(W) → PC<7:0>,<br>(PCLATH<6:0>) → PC<14:8> |
| Status Affected: | None |
| Description: | Subroutine call with W. First, the return address (PC + 1) is pushed onto the return stack. Then, the contents of W is loaded into PC<7:0>, and the contents of PCLATH into PC<14:8>. CALLW is a 2-cycle instruction. |

**CLRF** **Clear f**

| | |
|---|---|
| Syntax: | [ *label* ] CLRF f |
| Operands: | 0 ≤ f ≤ 127 |
| Operation: | 00h → (f)<br>1 → Z |
| Status Affected: | Z |
| Description: | The contents of register ‘f’ are cleared and the Z bit is set. |

**CLRW** **Clear W**

| | |
|---|---|
| Syntax: | [ *label* ] CLRW |
| Operands: | None |
| Operation: | 00h → (W)<br>1 → Z |
| Status Affected: | Z |
| Description: | W register is cleared. Zero bit (Z) is set. |

**CLRWDT** **Clear Watchdog Timer**

| | |
|---|---|
| Syntax: | [ *label* ] CLRWDT |
| Operands: | None |
| Operation: | 00h → WDT<br>0 → WDT prescaler,<br>1 → $\overline{TO}$<br>1 → $\overline{PD}$ |
| Status Affected: | $\overline{TO}$, $\overline{PD}$ |
| Description: | CLRWDT instruction resets the Watchdog Timer. It also resets the prescaler of the WDT. Status bits $\overline{TO}$ and $\overline{PD}$ are set. |

**COMF** **Complement f**

| | |
|---|---|
| Syntax: | [ *label* ] COMF f,d |
| Operands: | 0 ≤ f ≤ 127<br>d ∈ [0,1] |
| Operation: | ($\bar{f}$) → (destination) |
| Status Affected: | Z |
| Description: | The contents of register ‘f’ are complemented. If ‘d’ is ‘0’, the result is stored in W. If ‘d’ is ‘1’, the result is stored back in register ‘f’. |

**DECF** **Decrement f**

| | |
|---|---|
| Syntax: | [ *label* ] DECF f,d |
| Operands: | 0 ≤ f ≤ 127<br>d ∈ [0,1] |
| Operation: | (f) - 1 → (destination) |
| Status Affected: | Z |
| Description: | Decrement register ‘f’. If ‘d’ is ‘0’, the result is stored in the W register. If ‘d’ is ‘1’, the result is stored back in register ‘f’. |

chanhvinh.com



**DECFSZ** **Decrement f, Skip if 0**

| | |
|---|---|
| Syntax: | [ *label* ] DECFSZ f,d |
| Operands: | 0 ≤ f ≤ 127<br>d ∈ [0,1] |
| Operation: | (f) - 1 → (destination);<br>skip if result = 0 |
| Status Affected: | None |
| Description: | The contents of register 'f' are decremented. If 'd' is '0', the result is placed in the W register. If 'd' is '1', the result is placed back in register 'f'.<br>If the result is '1', the next instruction is executed. If the result is '0', then a NOP is executed instead, making it a 2-cycle instruction. |

**GOTO** **Unconditional Branch**

| | |
|---|---|
| Syntax: | [ *label* ] GOTO k |
| Operands: | 0 ≤ k ≤ 2047 |
| Operation: | k → PC<10:0><br>PCLATH<6:3> → PC<14:11> |
| Status Affected: | None |
| Description: | GOTO is an unconditional branch. The 11-bit immediate value is loaded into PC bits <10:0>. The upper bits of PC are loaded from PCLATH<4:3>. GOTO is a 2-cycle instruction. |

**INCF** **Increment f**

| | |
|---|---|
| Syntax: | [ *label* ] INCF f,d |
| Operands: | 0 ≤ f ≤ 127<br>d ∈ [0,1] |
| Operation: | (f) + 1 → (destination) |
| Status Affected: | Z |
| Description: | The contents of register 'f' are incremented. If 'd' is '0', the result is placed in the W register. If 'd' is '1', the result is placed back in register 'f'. |

**INCFSZ** **Increment f, Skip if 0**

| | |
|---|---|
| Syntax: | [ *label* ] INCFSZ f,d |
| Operands: | 0 ≤ f ≤ 127<br>d ∈ [0,1] |
| Operation: | (f) + 1 → (destination),<br>skip if result = 0 |
| Status Affected: | None |
| Description: | The contents of register 'f' are incremented. If 'd' is '0', the result is placed in the W register. If 'd' is '1', the result is placed back in register 'f'.<br>If the result is '1', the next instruction is executed. If the result is '0', a NOP is executed instead, making it a 2-cycle instruction. |

**IORLW** **Inclusive OR literal with W**

| | |
|---|---|
| Syntax: | [ *label* ] IORLW k |
| Operands: | 0 ≤ k ≤ 255 |
| Operation: | (W) .OR. k → (W) |
| Status Affected: | Z |
| Description: | The contents of the W register are OR'ed with the 8-bit literal 'k'. The result is placed in the W register. |

**IORWF** **Inclusive OR W with f**

| | |
|---|---|
| Syntax: | [ *label* ] IORWF f,d |
| Operands: | 0 ≤ f ≤ 127<br>d ∈ [0,1] |
| Operation: | (W) .OR. (f) → (destination) |
| Status Affected: | Z |
| Description: | Inclusive OR the W register with register 'f'. If 'd' is '0', the result is placed in the W register. If 'd' is '1', the result is placed back in register 'f'. |

 © 2013 Microchip Technology Inc.

chanhvinh.com



**LSLF** **Logical Left Shift**

Syntax: [ *label* ] LSLF f {,d}

Operands: $0 \le f \le 127$
$d \in [0,1]$

Operation: (f<7>) → C
(f<6:0>) → dest<7:1>
0 → dest<0>

Status Affected: C, Z

Description: The contents of register 'f' are shifted one bit to the left through the Carry flag. A '0' is shifted into the LSb. If 'd' is '0', the result is placed in W. If 'd' is '1', the result is stored back in register 'f'.

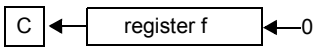


**LSRF** **Logical Right Shift**

Syntax: [ *label* ] LSRF f {,d}

Operands: $0 \le f \le 127$
$d \in [0,1]$

Operation: 0 → dest<7>
(f<7:1>) → dest<6:0>,
(f<0>) → C,

Status Affected: C, Z

Description: The contents of register 'f' are shifted one bit to the right through the Carry flag. A '0' is shifted into the MSb. If 'd' is '0', the result is placed in W. If 'd' is '1', the result is stored back in register 'f'.

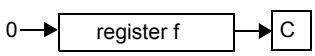


**MOVF** **Move f**

Syntax: [ *label* ] MOVF f,d

Operands: $0 \le f \le 127$
$d \in [0,1]$

Operation: (f) → (dest)

Status Affected: Z

Description: The contents of register f is moved to a destination dependent upon the status of d. If d = 0, destination is W register. If d = 1, the destination is file register f itself. d = 1 is useful to test a file register since status flag Z is affected.

Words: 1

Cycles: 1

Example:

```
MOVF    FSR, 0
```

After Instruction
W = value in FSR register
Z = 1

chanhvinh.com



### MOVIW — Move INDFn to W

Syntax: [ *label* ] MOVIW ++FSRn
[ *label* ] MOVIW --FSRn
[ *label* ] MOVIW FSRn++
[ *label* ] MOVIW FSRn--
[ *label* ] MOVIW k[FSRn]

Operands: n ∈ [0,1]
mm ∈ [00,01, 10, 11]
-32 ≤ k ≤ 31

Operation: INDFn → W
Effective address is determined by
- FSR + 1 (preincrement)
- FSR - 1 (predecrement)
- FSR + k (relative offset)

After the Move, the FSR value will be either:
- FSR + 1 (all increments)
- FSR - 1 (all decrements)
- Unchanged

Status Affected: Z

| Mode | Syntax | mm |
|---|---|---|
| Preincrement | ++FSRn | 00 |
| Predecrement | --FSRn | 01 |
| Postincrement | FSRn++ | 10 |
| Postdecrement | FSRn-- | 11 |

Description: This instruction is used to move data between W and one of the indirect registers (INDFn). Before/after this move, the pointer (FSRn) is updated by pre/post incrementing/decrementing it.

**Note:** The INDFn registers are not physical registers. Any instruction that accesses an INDFn register actually accesses the register at the address specified by the FSRn.

FSRn is limited to the range 0000h - FFFFh. Incrementing/decrementing it beyond these bounds will cause it to wrap-around.

### MOVLB — Move literal to BSR

Syntax: [ *label* ] MOVLB k

Operands: 0 ≤ k ≤ 31

Operation: k → BSR

Status Affected: None

Description: The 5-bit literal 'k' is loaded into the Bank Select Register (BSR).

### MOVLP — Move literal to PCLATH

Syntax: [ *label* ] MOVLP k

Operands: 0 ≤ k ≤ 127

Operation: k → PCLATH

Status Affected: None

Description: The 7-bit literal 'k' is loaded into the PCLATH register.

### MOVLW — Move literal to W

Syntax: [ *label* ] MOVLW k

Operands: 0 ≤ k ≤ 255

Operation: k → (W)

Status Affected: None

Description: The 8-bit literal 'k' is loaded into W register. The "don't cares" will assemble as '0's.

Words: 1

Cycles: 1

Example:
```
MOVLW   0x5A
```
After Instruction
W = 0x5A

### MOVWF — Move W to f

Syntax: [ *label* ] MOVWF f

Operands: 0 ≤ f ≤ 127

Operation: (W) → (f)

Status Affected: None

Description: Move data from W register to register 'f'.

Words: 1

Cycles: 1

Example:
```
MOVWF   OPTION_REG
```
Before Instruction
OPTION_REG = 0xFF
W = 0x4F
After Instruction
OPTION_REG = 0x4F
W = 0x4F

 © 2013 Microchip Technology Inc.

chanhvinh.com



**MOVWI** **Move W to INDFn**

Syntax:
[ *label* ] MOVWI ++FSRn
[ *label* ] MOVWI --FSRn
[ *label* ] MOVWI FSRn++
[ *label* ] MOVWI FSRn--
[ *label* ] MOVWI k[FSRn]

Operands:
n ∈ [0,1]
mm ∈ [00,01, 10, 11]
-32 ≤ k ≤ 31

Operation:
W → INDFn
Effective address is determined by
- FSR + 1 (preincrement)
- FSR - 1 (predecrement)
- FSR + k (relative offset)

After the Move, the FSR value will be either:
- FSR + 1 (all increments)
- FSR - 1 (all decrements)

Unchanged

Status Affected: None

| Mode | Syntax | mm |
|---|---|---|
| Preincrement | ++FSRn | 00 |
| Predecrement | --FSRn | 01 |
| Postincrement | FSRn++ | 10 |
| Postdecrement | FSRn-- | 11 |

Description: This instruction is used to move data between W and one of the indirect registers (INDFn). Before/after this move, the pointer (FSRn) is updated by pre/post incrementing/decrementing it.

**Note:** The INDFn registers are not physical registers. Any instruction that accesses an INDFn register actually accesses the register at the address specified by the FSRn.

FSRn is limited to the range 0000h-FFFFh. Incrementing/decrementing it beyond these bounds will cause it to wrap-around.

The increment/decrement operation on FSRn WILL NOT affect any Status bits.

**NOP** **No Operation**

Syntax: [ *label* ] NOP
Operands: None
Operation: No operation
Status Affected: None
Description: No operation.
Words: 1
Cycles: 1
Example:

```
NOP
```

**OPTION** **Load OPTION_REG Register with W**

Syntax: [ *label* ] OPTION
Operands: None
Operation: (W) → OPTION_REG
Status Affected: None
Description: Move data from W register to OPTION_REG register.
Words: 1
Cycles: 1
Example:

```
OPTION
```

Before Instruction
OPTION_REG = 0xFF
W = 0x4F
After Instruction
OPTION_REG = 0x4F
W = 0x4F

**RESET** **Software Reset**

Syntax: [ *label* ] RESET
Operands: None
Operation: Execute a device Reset. Resets the $\overline{RI}$ flag of the PCON register.
Status Affected: None
Description: This instruction provides a way to execute a hardware Reset by software.

chanhvinh.com



**RETFIE** **Return from Interrupt**

Syntax: [ *label* ] RETFIE k

Operands: None

Operation: TOS → PC,
1 → GIE

Status Affected: None

Description: Return from Interrupt. Stack is POPed and Top-of-Stack (TOS) is loaded in the PC. Interrupts are enabled by setting Global Interrupt Enable bit, GIE (INTCON<7>). This is a 2-cycle instruction.

Words: 1

Cycles: 2

Example:

```
RETFIE
```

After Interrupt
PC = TOS
GIE = 1

**RETLW** **Return with literal in W**

Syntax: [ *label* ] RETLW k

Operands: 0 ≤ k ≤ 255

Operation: k → (W);
TOS → PC

Status Affected: None

Description: The W register is loaded with the 8-bit literal 'k'. The program counter is loaded from the top of the stack (the return address). This is a 2-cycle instruction.

Words: 1

Cycles: 2

Example:

```
CALL TABLE;W contains table
    ;offset value
•   ;W now has table value
•
•
•
ADDWF PC  ;W = offset
RETLW k1  ;Begin table
RETLW k2  ;
•
•
•
RETLW kn  ; End of table
```

```
TABLE
```

Before Instruction
W = 0x07
After Instruction
W = value of k8

**RETURN** **Return from Subroutine**

Syntax: [ *label* ] RETURN

Operands: None

Operation: TOS → PC

Status Affected: None

Description: Return from subroutine. The stack is POPed and the top of the stack (TOS) is loaded into the program counter. This is a 2-cycle instruction.

**RLF** **Rotate Left f through Carry**

Syntax: [ *label* ] RLF f,d

Operands: 0 ≤ f ≤ 127
d ∈ [0,1]

Operation: See description below

Status Affected: C

Description: The contents of register 'f' are rotated one bit to the left through the Carry flag. If 'd' is '0', the result is placed in the W register. If 'd' is '1', the result is stored back in register 'f'.

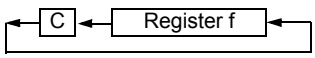


Words: 1

Cycles: 1

Example:

```
RLF     REG1,0
```

Before Instruction
REG1 = 1110 0110
C = 0
After Instruction
REG1 = 1110 0110
W = 1100 1100
C = 1

 © 2013 Microchip Technology Inc.

chanhvinh.com



**RRF** **Rotate Right f through Carry**

Syntax: [ *label* ] RRF f,d

Operands: 0 ≤ f ≤ 127
d ∈ [0,1]

Operation: See description below

Status Affected: C

Description: The contents of register 'f' are rotated one bit to the right through the Carry flag. If 'd' is '0', the result is placed in the W register. If 'd' is '1', the result is placed back in register 'f'.

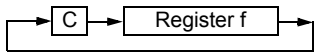


**SLEEP** **Enter Sleep mode**

Syntax: [ *label* ] SLEEP

Operands: None

Operation: 00h → WDT,
0 → WDT prescaler,
1 → $\overline{TO}$,
0 → $\overline{PD}$

Status Affected: $\overline{TO}$, $\overline{PD}$

Description: The power-down Status bit, $\overline{PD}$ is cleared. Time-out Status bit, $\overline{TO}$ is set. Watchdog Timer and its prescaler are cleared.
The processor is put into Sleep mode with the oscillator stopped.

**SUBLW** **Subtract W from literal**

Syntax: [ *label* ] SUBLW k

Operands: 0 ≤ k ≤ 255

Operation: k - (W) → (W)

Status Affected: C, DC, Z

Description: The W register is subtracted (2's complement method) from the 8-bit literal 'k'. The result is placed in the W register.

| | |
|---|---|
| C = 0 | W > k |
| C = 1 | W ≤ k |
| DC = 0 | W<3:0> > k<3:0> |
| DC = 1 | W<3:0> ≤ k<3:0> |

**SUBWF** **Subtract W from f**

Syntax: [ *label* ] SUBWF f,d

Operands: 0 ≤ f ≤ 127
d ∈ [0,1]

Operation: (f) - (W) → (destination)

Status Affected: C, DC, Z

Description: Subtract (2's complement method) W register from register 'f'. If 'd' is '0', the result is stored in the W register. If 'd' is '1', the result is stored back in register 'f.

| | |
|---|---|
| C = 0 | W > f |
| C = 1 | W ≤ f |
| DC = 0 | W<3:0> > f<3:0> |
| DC = 1 | W<3:0> ≤ f<3:0> |

**SUBWFB** **Subtract W from f with Borrow**

Syntax: SUBWFB f {,d}

Operands: 0 ≤ f ≤ 127
d ∈ [0,1]

Operation: (f) – (W) – ($\overline{B}$) → dest

Status Affected: C, DC, Z

Description: Subtract W and the BORROW flag (CARRY) from register 'f' (2's complement method). If 'd' is '0', the result is stored in W. If 'd' is '1', the result is stored back in register 'f'.

chanhvinh.com



**SWAPF** **Swap Nibbles in f**

| | |
|---|---|
| Syntax: | [ *label* ] SWAPF f,d |
| Operands: | 0 ≤ f ≤ 127<br>d ∈ [0,1] |
| Operation: | (f<3:0>) → (destination<7:4>),<br>(f<7:4>) → (destination<3:0>) |
| Status Affected: | None |
| Description: | The upper and lower nibbles of register 'f' are exchanged. If 'd' is '0', the result is placed in the W register. If 'd' is '1', the result is placed in register 'f'. |

**TRIS** **Load TRIS Register with W**

| | |
|---|---|
| Syntax: | [ *label* ] TRIS f |
| Operands: | 5 ≤ f ≤ 7 |
| Operation: | (W) → TRIS register 'f' |
| Status Affected: | None |
| Description: | Move data from W register to TRIS register.<br>When 'f' = 5, TRISA is loaded.<br>When 'f' = 6, TRISB is loaded.<br>When 'f' = 7, TRISC is loaded. |

**XORLW** **Exclusive OR literal with W**

| | |
|---|---|
| Syntax: | [ *label* ] XORLW k |
| Operands: | 0 ≤ k ≤ 255 |
| Operation: | (W) .XOR. k → (W) |
| Status Affected: | Z |
| Description: | The contents of the W register are XOR'ed with the 8-bit literal 'k'. The result is placed in the W register. |

**XORWF** **Exclusive OR W with f**

| | |
|---|---|
| Syntax: | [ *label* ] XORWF f,d |
| Operands: | 0 ≤ f ≤ 127<br>d ∈ [0,1] |
| Operation: | (W) .XOR. (f) → (destination) |
| Status Affected: | Z |
| Description: | Exclusive OR the contents of the W register with register 'f'. If 'd' is '0', the result is stored in the W register. If 'd' is '1', the result is stored back in register 'f'. |

 © 2013 Microchip Technology Inc.

chanhvinh.com



# 32.0 ELECTRICAL SPECIFICATIONS

## 32.1 Absolute Maximum Ratings(†)

Ambient temperature under bias ..... -40°C to +125°C
Storage temperature ..... -65°C to +150°C
Voltage on pins with respect to VSS
- on VDD pin
  - PIC16F1704/8 ..... -0.3V to +6.5V
  - PIC16LF1704/8 ..... -0.3V to +4.0V
- on $\overline{MCLR}$ pin ..... -0.3V to +9.0V
- on all other pins ..... -0.3V to (VDD + 0.3V)

Maximum current
- on VSS pin(1)
  - -40°C ≤ TA ≤ +85°C ..... 170 mA
  - -40°C ≤ TA ≤ +125°C ..... 70 mA
- on VDD pin(1)
  - -40°C ≤ TA ≤ +85°C ..... 170 mA
  - -40°C ≤ TA ≤ +125°C ..... 70 mA
- on any I/O pin ..... ±25 mA

Clamp current, IK (VPIN < 0 or VPIN > VDD) ..... ±20 mA
Total power dissipation(2) ..... 800 mW

**Note 1:** Maximum current rating requires even load distribution across I/O pins. Maximum current rating may be limited by the device package power dissipation characterizations, see Table 32-6: Thermal Characteristics to calculate device specifications.

**2:** Power dissipation is calculated as follows:

Pdis = VDD* {Idd- ΣIoh} + Σ{VDD-Voh)*Ioh} + Σ(Vol*Iol).

† NOTICE: Stresses above those listed under "Absolute Maximum Ratings" may cause permanent damage to the device. This is a stress rating only and functional operation of the device at those or any other conditions above those indicated in the operation listings of this specification is not implied. Exposure above maximum rating conditions for extended periods may affect device reliability.

PRELIMINARY

chanhvinh.com



## 32.2 Standard Operating Conditions

The standard operating conditions for any device are defined as:

Operating Voltage: $V_{DDMIN} \le V_{DD} \le V_{DDMAX}$
Operating Temperature: $T_{A_MIN} \le T_A \le T_{A_MAX}$

**$V_{DD}$ — Operating Supply Voltage(1)**

PIC16LF1704/8

- $V_{DDMIN}$ (Fosc ≤ 16 MHz) ..... +1.8V
- $V_{DDMIN}$ (Fosc > 16 MHz) ..... +2.5V
- $V_{DDMAX}$ ..... +3.6V

PIC16F1704/8

- $V_{DDMIN}$ (Fosc ≤ 16 MHz) ..... +2.3V
- $V_{DDMIN}$ (> 16 MHz) ..... +2.5V
- $V_{DDMAX}$ ..... +5.5V

**$T_A$ — Operating Ambient Temperature Range**

Industrial Temperature

- $T_{A_MIN}$ ..... -40°C
- $T_{A_MAX}$ ..... +85°C

Extended Temperature

- $T_{A_MIN}$ ..... -40°C
- $T_{A_MAX}$ ..... +125°C

**Note 1:** See Parameter D001, DS Characteristics: Supply Voltage

PRELIMINARY

 © 2013 Microchip Technology Inc.

chanhvinh.com



**FIGURE 32-1: VOLTAGE FREQUENCY GRAPH, -40°C ≤ TA ≤ +125°C, PIC16F1704/8 ONLY**

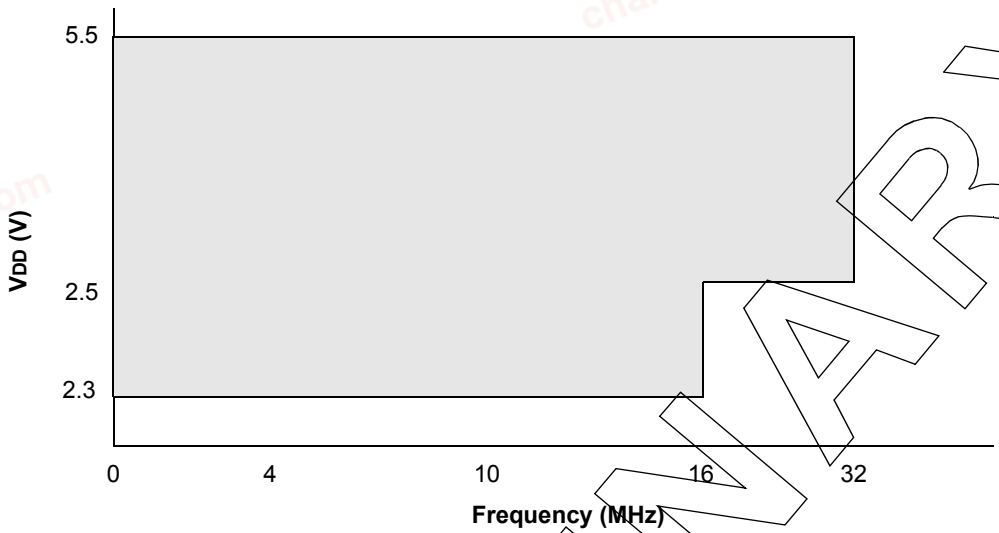


**Note 1:** The shaded region indicates the permissible combinations of voltage and frequency.
**2:** Refer to Table 32-7 for each Oscillator mode's supported frequencies.

**FIGURE 32-2: VOLTAGE FREQUENCY GRAPH, -40°C ≤ TA ≤ +125°C, PIC16LF1704/8 ONLY**

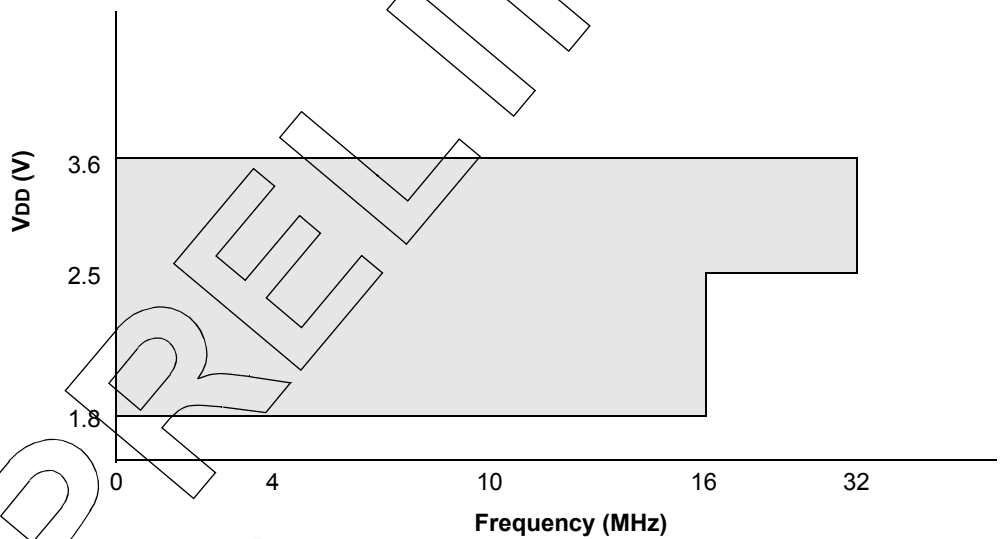


**Note 1:** The shaded region indicates the permissible combinations of voltage and frequency.
**2:** Refer to Table 32-7 for each Oscillator mode's supported frequencies.

PRELIMINARY

chanhvinh.com



## 32.3 DC Characteristics

### TABLE 32-1: SUPPLY VOLTAGE

| PIC16LF1704/8 | | | Standard Operating Conditions (unless otherwise stated) | | | | |
|---|---|---|---|---|---|---|---|
| PIC16F1704/8 | | | | | | | |
| Param. No. | Sym. | Characteristic | Min. | Typ† | Max. | Units | Conditions |
| D001 | VDD | **Supply Voltage** | | | | | |
| | | | VDDMIN<br>1.8<br>2.5 | | VDDMAX<br>3.6<br>3.6 | V<br>V | FOSC ≤ 16 MHz<br>FOSC ≤ 32 MHz (**Note 2**) |
| D001 | | PIC16F1704/8 | 2.3<br>2.5 | — | 5.5<br>5.5 | V<br>V | FOSC ≤ 16 MHz:<br>FOSC ≤ 32 MHz (**Note 2**) |
| D002* | VDR | **RAM Data Retention Voltage(1)** | | | | | |
| | | | 1.5 | — | — | V | Device in Sleep mode |
| D002* | | | 1.7 | — | — | V | Device in Sleep mode |
| D002A* | VPOR | **Power-on Reset Release Voltage(3)** | | | | | |
| | | | — | 1.6 | — | V | |
| D002A* | | | — | 1.6 | — | V | |
| D002B* | VPORR* | **Power-on Reset Rearm Voltage(3)** | | | | | |
| | | | — | 0.8 | — | V | |
| D002B* | | | — | 1.5 | — | V | |
| D003 | VFVR | **Fixed Voltage Reference Voltage(4)** | -4 | — | +4 | % | 1.024, VDD ≥ 2.5V<br>2.048, VDD ≥ 2.5V |
| | | | -5 | — | +5 | % | 4.096, VDD ≥ 4.75V |
| D004* | SVDD | **VDD Rise Rate(2)** | 0.05 | — | — | V/ms | Ensures that the Power-on Reset signal is released properly. |

* These parameters are characterized but not tested.

† Data in "Typ" column is at 3.0V, 25°C unless otherwise stated. These parameters are for design guidance only and are not tested.

**Note 1:** This is the limit to which VDD can be lowered in Sleep mode without losing RAM data.

**2:** PLL required for 32 MHz operation.

**3:** See Figure 32-3: POR and POR Rearm with Slow Rising VDD.

**4:** Industrial temperature range only.

PRELIM

 © 2013 Microchip Technology Inc.

chanhvinh.com



**FIGURE 32-3: POR AND POR REARM WITH SLOW RISING VDD**

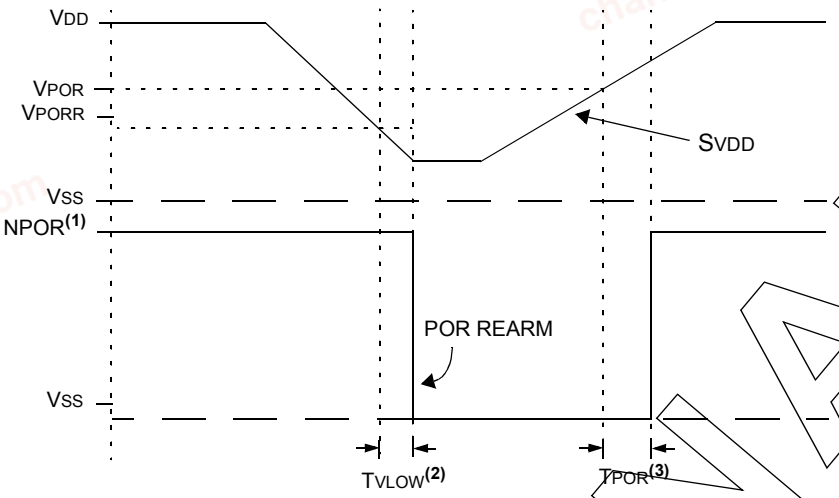


**Note 1:** When NPOR is low, the device is held in Reset.
**2:** TPOR 1 µs typical.
**3:** TVLOW 2.7 µs typical.

PRELIMINARY

chanhvinh.com



**TABLE 32-2: SUPPLY CURRENT ($I_{DD}$)(1,2)**

| PIC16LF1704/8 | Standard Operating Conditions (unless otherwise stated) | | | | | |
|---|---|---|---|---|---|---|
| **PIC16F1704/8** | | | | | | |
| **Param No.** | **Device Characteristics** | **Min.** | **Typ†** | **Max.** | **Units** | **Conditions** |
| | | | | | | **$V_{DD}$** / **Note** |
| D009 | LDO Regulator | — | 75 | — | µA | — / High Power mode, normal operation |
| | | — | 15 | — | µA | — / Sleep, VREGCON<1> = 0 |
| | | — | 0.3 | — | µA | — / Sleep, VREGCON<1> = 1 |
| D010 | | — | 8 | — | µA | 1.8 / $F_{OSC}$ = 32 kHz, LP Oscillator mode, -40°C ≤ $T_A$ ≤ +85°C |
| | | — | 12 | — | µA | 3.0 |
| D010 | | — | 15 | — | µA | 2.3 / $F_{OSC}$ = 32 kHz, LP Oscillator mode (**Note 4**), -40°C ≤ $T_A$ ≤ +85°C |
| | | — | 17 | — | µA | 3.0 |
| | | — | 21 | — | µA | 5.0 |
| D012 | | — | 140 | — | µA | 1.8 / $F_{OSC}$ = 4 MHz, XT Oscillator mode |
| | | — | 250 | — | µA | 3.0 |
| D012 | | — | 210 | — | µA | 2.3 / $F_{OSC}$ = 4 MHz, XT Oscillator mode |
| | | — | 280 | — | µA | 3.0 |
| | | — | 340 | — | µA | 5.0 |
| D014 | | — | 115 | — | µA | 1.8 / $F_{OSC}$ = 4 MHz, External Clock (ECM), Medium-Power mode |
| | | — | 210 | — | µA | 3.0 |
| D014 | | — | 180 | — | µA | 2.3 / $F_{OSC}$ = 4 MHz, External Clock (ECM), Medium-Power mode |
| | | — | 240 | — | µA | 3.0 |
| | | — | 300 | — | µA | 5.0 |
| D015 | | — | 2.1 | — | mA | 3.0 / $F_{OSC}$ = 32 MHz, External Clock (ECH), High-Power mode (**Note 5**) |
| | | — | 2.5 | — | mA | 3.6 |
| D015 | | — | 2.1 | — | mA | 3.0 / $F_{OSC}$ = 32 MHz, External Clock (ECH), High-Power mode (**Note 5**) |
| | | — | 2.2 | — | mA | 5.0 |

† Data in "Typ" column is at 3.0V, 25°C unless otherwise stated. These parameters are for design guidance only and are not tested.

**Note 1:** The test conditions for all $I_{DD}$ measurements in active operation mode are: OSC1 = external square wave, from rail-to-rail; all I/O pins tri-stated, pulled to $V_{DD}$; $\overline{MCLR}$ = $V_{DD}$; WDT disabled.

**2:** The supply current is mainly a function of the operating voltage and frequency. Other factors, such as I/O pin loading and switching rate, oscillator type, internal code execution pattern and temperature, also have an impact on the current consumption.

**3:** For EXTRC oscillator configurations, current through $R_{EXT}$ is not included. The current through the resistor can be extended by the formula $I_R = V_{DD}/2R_{EXT}$ (mA) with $R_{EXT}$ in kΩ.

**4:** FVR and BOR are disabled.

**5:** 8 MHz clock with 4x PLL enabled.

 © 2013 Microchip Technology Inc.

chanhvinh.com



**TABLE 32-2: SUPPLY CURRENT ($I_{DD}$)(1,2) (CONTINUED)**

| PIC16LF1704/8 | | Standard Operating Conditions (unless otherwise stated) | | | | | |
|---|---|---|---|---|---|---|---|
| PIC16F1704/8 | | | | | | | |
| Param No. | Device Characteristics | Min. | Typ† | Max. | Units | Conditions | |
| | | | | | | $V_{DD}$ | Note |
| D017 | | — | 130 | — | µA | 1.8 | $F_{OSC}$ = 500 kHz, MFINTOSC mode |
| | | — | 150 | — | µA | 3.0 | |
| D017 | | — | 150 | — | µA | 2.3 | $F_{OSC}$ = 500 kHz, MFINTOSC mode |
| | | — | 170 | — | µA | 3.0 | |
| | | — | 220 | — | µA | 5.0 | |
| D019 | | — | 0.8 | — | mA | 1.8 | $F_{OSC}$ = 16 MHz, HFINTOSC mode |
| | | — | 1.2 | — | mA | 3.0 | |
| D019 | | — | 1.0 | — | mA | 2.3 | $F_{OSC}$ = 16 MHz, HFINTOSC mode |
| | | — | 1.3 | — | mA | 3.0 | |
| | | — | 1.4 | — | mA | 5.0 | |
| D020 | | — | 2.1 | — | mA | 3.0 | $F_{OSC}$ = 32 MHz, HFINTOSC mode (**Note 5**) |
| | | — | 2.5 | — | mA | 3.6 | |
| D020 | | — | 2.1 | — | mA | 3.0 | $F_{OSC}$ = 32 MHz, HFINTOSC mode (**Note 5**) |
| | | — | 2.2 | — | mA | 5.0 | |
| D022 | | — | 2.1 | — | mA | 3.0 | $F_{OSC}$ = 32 MHz, HS Oscillator mode (**Note 5**) |
| | | — | 2.5 | — | mA | 3.6 | |
| D022 | | — | 2.1 | — | mA | 3.0 | $F_{OSC}$ = 32 MHz HS Oscillator mode (**Note 5**) |
| | | — | 2.2 | — | mA | 5.0 | |

† Data in "Typ" column is at 3.0V, 25°C unless otherwise stated. These parameters are for design guidance only and are not tested.

**Note 1:** The test conditions for all $I_{DD}$ measurements in active operation mode are: OSC1 = external square wave, from rail-to-rail; all I/O pins tri-stated, pulled to $V_{DD}$; $\overline{MCLR}$ = $V_{DD}$; WDT disabled.

**2:** The supply current is mainly a function of the operating voltage and frequency. Other factors, such as I/O pin loading and switching rate, oscillator type, internal code execution pattern and temperature, also have an impact on the current consumption.

**3:** For EXTRC oscillator configurations, current through $R_{EXT}$ is not included. The current through the resistor can be extended by the formula $I_R = V_{DD}/2R_{EXT}$ (mA) with $R_{EXT}$ in kΩ.

**4:** FVR and BOR are disabled.

**5:** 8 MHz clock with 4x PLL enabled.

PRELIMINARY

chanhvinh.com



0

**TABLE 32-3: POWER-DOWN CURRENTS ($I_{PD}$)(1,2)**

| PIC16LF1704/8 | | | Operating Conditions: (unless otherwise stated) Low-Power Sleep Mode | | | | | |
|---|---|---|---|---|---|---|---|---|
| PIC16F1704/8 | | | Low-Power Sleep Mode, VREGPM = 1 | | | | | |
| Param No. | Device Characteristics | Min. | Typ† | Max. +85°C | Max. +125°C | Units | Conditions | |
| | | | | | | | $V_{DD}$ | Note |
| D023 | Base $I_{PD}$ | — | 0.05 | 1.0 | 8.0 | µA | 1.8 | WDT, BOR, FVR, and SOSC disabled, all Peripherals Inactive |
| | | — | 0.08 | 2.0 | 9.0 | µA | 3.0 | |
| D023 | Base $I_{PD}$ | — | 0.3 | 3 | 11 | µA | 2.3 | WDT, BOR, FVR, and SOSC disabled, all Peripherals Inactive, Low-Power Sleep mode |
| | | — | 0.4 | 4 | 12 | µA | 3.0 | |
| | | — | 0.5 | 6 | 15 | µA | 5.0 | |
| D023A | Base $I_{PD}$ | — | 9.8 | 16 | 18 | µA | 2.3 | WDT, BOR, FVR and SOSC disabled, all Peripherals inactive, Normal-Power Sleep mode VREGPM = 0 |
| | | — | 10.3 | 18 | 20 | µA | 3.0 | |
| | | — | 11.5 | 21 | 26 | µA | 5.0 | |
| D024 | | — | 0.5 | 6 | 14 | µA | 1.8 | WDT Current |
| | | — | 0.8 | 7 | 17 | µA | 3.0 | |
| D024 | | — | 0.8 | 6 | 15 | µA | 2.3 | WDT Current |
| | | — | 0.9 | 7 | 20 | µA | 3.0 | |
| | | — | 1.0 | 8 | 22 | µA | 5.0 | |
| D025 | | — | 15 | 28 | 30 | µA | 1.8 | FVR Current |
| | | — | 18 | 30 | 33 | µA | 3.0 | |
| D025 | | — | 18 | 33 | 35 | µA | 2.3 | FVR Current |
| | | — | 19 | 35 | 37 | µA | 3.0 | |
| | | — | 20 | 37 | 39 | µA | 5.0 | |
| D026 | | — | 7.5 | 25 | 28 | µA | 3.0 | BOR Current |
| D026 | | — | 10 | 25 | 28 | µA | 3.0 | BOR Current |
| | | — | 12 | 28 | 31 | µA | 5.0 | |
| D027 | | — | 0.5 | 4 | 10 | µA | 3.0 | LPBOR Current |
| D027 | | — | 0.8 | 6 | 14 | µA | 3.0 | LPBOR Current |
| | | — | 1 | 8 | 17 | µA | 5.0 | |
| D028 | | — | 0.5 | 5 | 9 | µA | 1.8 | SOSC Current |
| | | — | 0.8 | 8.5 | 12 | µA | 3.0 | |
| D028 | | — | 1.1 | 6 | 10 | µA | 2.3 | SOSC Current |
| | | — | 1.3 | 8.5 | 20 | µA | 3.0 | |
| | | — | 1.4 | 10 | 25 | µA | 5.0 | |
| D029 | | — | 0.05 | 2 | 9 | µA | 1.8 | ADC Current **(Note 3)**, no conversion in progress |
| | | — | 0.08 | 3 | 10 | µA | 3.0 | |
| D029 | | — | 0.3 | 4 | 12 | µA | 2.3 | ADC Current **(Note 3)**, no conversion in progress |
| | | — | 0.4 | 5 | 13 | µA | 3.0 | |
| | | — | 0.5 | 7 | 16 | µA | 5.0 | |

* These parameters are characterized but not tested.

† Data in "Typ" column is at 3.0V, 25°C unless otherwise stated. These parameters are for design guidance only and are not tested.

**Note 1:** The peripheral current is the sum of the base $I_{PD}$ and the additional current consumed when this peripheral is enabled. The peripheral Δ current can be determined by subtracting the base $I_{DD}$ or $I_{PD}$ current from this limit. Max values should be used when calculating total current consumption.

**2:** The power-down current in Sleep mode does not depend on the oscillator type. Power-down current is measured with the part in Sleep mode, with all I/O pins in high-impedance state and tied to $V_{SS}$.

**3:** ADC clock source is FRC.

 © 2013 Microchip Technology Inc.

chanhvinh.com



**TABLE 32-3: POWER-DOWN CURRENTS ($I_{PD}$)(1,2) (CONTINUED)**

| PIC16LF1704/8 | | | Operating Conditions: (unless otherwise stated)<br>Low-Power Sleep Mode | | | | | |
|---|---|---|---|---|---|---|---|---|
| PIC16F1704/8 | | | Low-Power Sleep Mode, VREGPM = 1 | | | | | |
| Param No. | Device Characteristics | Min. | Typ† | Max. +85°C | Max. +125°C | Units | Conditions | |
| | | | | | | | $V_{DD}$ | Note |
| D030 | | — | 250 | — | — | µA | 1.8 | ADC Current **(Note 3)**, conversion in progress |
| | | — | 280 | — | — | µA | 3.0 | |
| D030 | | — | 230 | — | — | µA | 2.3 | ADC Current **(Note 3)**, conversion in progress |
| | | — | 250 | — | — | µA | 3.0 | |
| | | — | 350 | — | — | µA | 5.0 | |
| D031 | | — | 250 | 650 | — | µA | 3.0 | Op Amp (High-power) |
| D031 | | — | 250 | 650 | — | µA | 3.0 | Op Amp (High-power) |
| | | — | 350 | 650 | — | µA | 5.0 | |
| D032 | | — | 250 | 600 | — | µA | 1.8 | Comparator, CxSP = 0 |
| | | — | 300 | 650 | — | µA | 3.0 | |
| D032 | | — | 280 | 600 | — | µA | 2.3 | Comparator, CxSP = 0 VREGPM = 0 |
| | | — | 300 | 650 | — | µA | 3.0 | |
| | | — | 310 | 650 | — | µA | 5.0 | |

* These parameters are characterized but not tested.

† Data in "Typ" column is at 3.0V, 25°C unless otherwise stated. These parameters are for design guidance only and are not tested.

**Note 1:** The peripheral current is the sum of the base $I_{PD}$ and the additional current consumed when this peripheral is enabled. The peripheral Δ current can be determined by subtracting the base $I_{DD}$ or $I_{PD}$ current from this limit. Max values should be used when calculating total current consumption.

**2:** The power-down current in Sleep mode does not depend on the oscillator type. Power-down current is measured with the part in Sleep mode, with all I/O pins in high-impedance state and tied to $V_{SS}$.

**3:** ADC clock source is FRC.

PRELIMINARY

chanhvinh.com



**TABLE 32-4: I/O PORTS**

| Standard Operating Conditions (unless otherwise stated) | | | | | | | |
|---|---|---|---|---|---|---|---|
| **Param No.** | **Sym.** | **Characteristic** | **Min.** | **Typ†** | **Max.** | **Units** | **Conditions** |
| | VIL | **Input Low Voltage** | | | | | |
| | | I/O PORT: | | | | | |
| D034 | | with TTL buffer | — | — | 0.8 | V | 4.5V ≤ VDD ≤ 5.5V |
| D034A | | | — | — | 0.15 VDD | V | 1.8V ≤ VDD ≤ 4.5V |
| D035 | | with Schmitt Trigger buffer | — | — | 0.2 VDD | V | 2.0V ≤ VDD ≤ 5.5V |
| | | with I²C™ levels | — | — | 0.3 VDD | V | |
| | | with SMBus levels | — | — | 0.8 | V | 2.7V ≤ VDD ≤ 5.5V |
| D036 | | $\overline{MCLR}$, OSC1 (EXTRC mode) | — | — | 0.2 VDD | V | **(Note 1)** |
| D036A | | OSC1 (HS mode) | — | — | 0.3 VDD | V | |
| | VIH | **Input High Voltage** | | | | | |
| | | I/O ports: | | | | | |
| D040 | | with TTL buffer | 2.0 | — | — | V | 4.5V ≤ VDD ≤ 5.5V |
| D040A | | | 0.25 VDD + 0.8 | — | — | V | 1.8V ≤ VDD ≤ 4.5V |
| D041 | | with Schmitt Trigger buffer | 0.8 VDD | — | — | V | 2.0V ≤ VDD ≤ 5.5V |
| | | with I²C™ levels | 0.7 VDD | — | — | V | |
| | | with SMBus levels | 2.1 | — | — | V | 2.7V ≤ VDD ≤ 5.5V |
| D042 | | $\overline{MCLR}$ | 0.8 VDD | — | — | V | |
| D043A | | OSC1 (HS mode) | 0.7 VDD | — | — | V | |
| D043B | | OSC1 (EXTRC oscillator) | 0.9 VDD | — | — | V | VDD > 2.0V**(Note 1)** |
| | IIL | **Input Leakage Current(2)** | | | | | |
| D060 | | I/O Ports | — | ± 5 | ± 125 | nA | VSS ≤ VPIN ≤ VDD, Pin at high-impedance, 85°C |
| | | | — | ± 5 | ± 1000 | nA | VSS ≤ VPIN ≤ VDD, Pin at high-impedance, 125°C |
| D061 | | $\overline{MCLR}$(3) | — | ± 50 | ± 200 | nA | VSS ≤ VPIN ≤ VDD, Pin at high-impedance, 85°C |
| | IPUR | **Weak Pull-up Current** | | | | | |
| D070* | | | 25 | 100 | 200 | µA | VDD = 3.3V, VPIN = VSS |
| | | | 25 | 140 | 300 | µA | VDD = 5.0V, VPIN = VSS |
| | VOL | **Output Low Voltage(4)** | | | | | |
| D080 | | I/O ports | — | — | 0.6 | V | IOL = 8mA, VDD = 5V<br>IOL = 6mA, VDD = 3.3V<br>IOL = 1.8mA, VDD = 1.8V |
| | VOH | **Output High Voltage(4)** | | | | | |
| D090 | | I/O ports | VDD - 0.7 | — | — | V | IOH = 3.5mA, VDD = 5V<br>IOH = 3mA, VDD = 3.3V<br>IOH = 1mA, VDD = 1.8V |
| | | **Capacitive Loading Specs on Output Pins** | | | | | |
| D101* | COSC2 | OSC2 pin | — | — | 15 | pF | In XT, HS and LP modes when external clock is used to drive OSC1 |
| D101A* | CIO | All I/O pins | — | — | 50 | pF | |

* These parameters are characterized but not tested.

† Data in "Typ" column is at 3.0V, 25°C unless otherwise stated. These parameters are for design guidance only and are not tested.

**Note 1:** In EXTRC oscillator configuration, the OSC1/CLKIN pin is a Schmitt Trigger input. It is not recommended to use an external clock in EXTRC mode.

**2:** Negative current is defined as current sourced by the pin.

**3:** The leakage current on the $\overline{MCLR}$ pin is strongly dependent on the applied voltage level. The specified levels represent normal operating conditions. Higher leakage current may be measured at different input voltages.

**4:** Including OSC2 in CLKOUT mode.

PRELIMINARY

 © 2013 Microchip Technology Inc.

chanhvinh.com



**TABLE 32-5: MEMORY PROGRAMMING SPECIFICATIONS**

| Standard Operating Conditions (unless otherwise stated) | | | | | | | |
|---|---|---|---|---|---|---|---|
| **Param No.** | **Sym.** | **Characteristic** | **Min.** | **Typ†** | **Max.** | **Units** | **Conditions** |
| | | **Program Memory Programming Specifications** | | | | | |
| D110 | VIHH | Voltage on $\overline{MCLR}$/VPP pin | 8.0 | — | 9.0 | V | **(Note 2)** |
| D111 | IDDP | Supply Current during Programming | — | — | 10 | mA | |
| D112 | VBE | VDD for Bulk Erase | 2.7 | — | VDDMAX | V | |
| D113 | VPEW | VDD for Write or Row Erase | VDDMIN | — | VDDMAX | V | |
| D114 | IPPPGM | Current on $\overline{MCLR}$/VPP during Erase/Write | — | 1.0 | — | mA | |
| D115 | IDDPGM | Current on VDD during Erase/Write | — | 5.0 | — | mA | |
| | | **Program Flash Memory** | | | | | |
| D121 | EP | Cell Endurance | 10K | — | — | E/W | -40°C ≤ TA ≤ +85°C (**Note 1**) |
| D122 | VPRW | VDD for Read/Write | VDDMIN | — | VDDMAX | V | |
| D123 | TIW | Self-timed Write Cycle Time | — | 2 | 2.5 | ms | |
| D124 | TRETD | Characteristic Retention | — | 40 | — | Year | Provided no other specifications are violated |
| D125 | EHEFC | High-Endurance Flash Cell | 100K | — | — | E/W | -0°C ≤ TA ≤ +60°C, Lower byte last 128 addresses |

† Data in "Typ" column is at 3.0V, 25°C unless otherwise stated. These parameters are for design guidance only and are not tested.

**Note 1:** Self-write and Block Erase.

**2:** Required only if single-supply programming is disabled.

PRELIMINARY

chanhvinh.com



**TABLE 32-6: THERMAL CHARACTERISTICS**

| Standard Operating Conditions (unless otherwise stated) | | | | | |
|---|---|---|---|---|---|
| **Param No.** | **Sym.** | **Characteristic** | **Typ.** | **Units** | **Conditions** |
| TH01 | θJA | Thermal Resistance Junction to Ambient | 70.0 | °C/W | 14-pin PDIP package |
| | | | 95.3 | °C/W | 14-pin SOIC package |
| | | | 100.0 | °C/W | 14-pin TSSOP package |
| | | | 51.5 | °C/W | 16-pin QFN 4x4mm package |
| | | | 62.2 | °C/W | 20-pin PDIP package |
| | | | 87.3 | °C/W | 20-pin SSOP |
| | | | 77.7 | °C/W | 20-pin SOIC package |
| | | | 43.0 | °C/W | 20-pin QFN 4x4mm package |
| TH02 | θJC | Thermal Resistance Junction to Case | 32.75 | °C/W | 14-pin PDIP package |
| | | | 31.0 | °C/W | 14-pin SOIC package |
| | | | 24.4 | °C/W | 14-pin TSSOP package |
| | | | 5.4 | °C/W | 16-pin QFN 4x4mm package |
| | | | 27.5 | °C/W | 20-pin PDIP package |
| | | | 31.1 | °C/W | 20-pin SSOP |
| | | | 23.1 | °C/W | 20-pin SOIC package |
| | | | 5.3 | °C/W | 20-pin QFN 4x4mm package |
| TH03 | TJMAX | Maximum Junction Temperature | 150 | °C | |
| TH04 | PD | Power Dissipation | — | W | PD = PINTERNAL + PI/O |
| TH05 | PINTERNAL | Internal Power Dissipation | — | W | PINTERNAL = IDD x VDD(1) |
| TH06 | PI/O | I/O Power Dissipation | — | W | PI/O = Σ (IOL * VOL) + Σ (IOH * (VDD - VOH)) |
| TH07 | PDER | Derated Power | — | W | PDER = PDMAX (TJ - TA)/θJA(2) |

**Note 1:** IDD is current to run the chip alone without driving any load on the output pins.
**2:** TA = Ambient Temperature, TJ = Junction Temperature

PRELIMINARY

 © 2013 Microchip Technology Inc.

chanhvinh.com



## 32.4 AC Characteristics

Timing Parameter Symbology has been created with one of the following formats:

1. TppS2ppS
2. TppS

| T | | | |
|---|---|---|---|
| F | Frequency | T | Time |

Lowercase letters (pp) and their meanings:

| pp | | | |
|---|---|---|---|
| cc | CCP1 | osc | OSC1 |
| ck | CLKOUT | rd | $\overline{RD}$ |
| cs | $\overline{CS}$ | rw | $\overline{RD}$ or $\overline{WR}$ |
| di | SDI | sc | SCK |
| do | SDO | ss | $\overline{SS}$ |
| dt | Data in | t0 | T0CKI |
| io | I/O PORT | t1 | T1CKI |
| mc | $\overline{MCLR}$ | wr | $\overline{WR}$ |

Uppercase letters and their meanings:

| S | | | |
|---|---|---|---|
| F | Fall | P | Period |
| H | High | R | Rise |
| I | Invalid (High-impedance) | V | Valid |
| L | Low | Z | High-impedance |

**FIGURE 32-4: LOAD CONDITIONS**

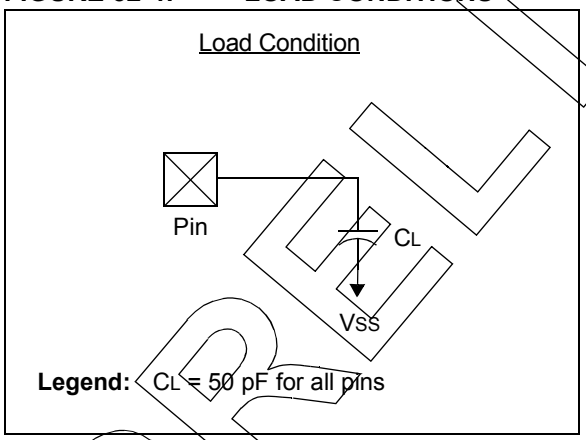


PRELIMINARY

chanhvinh.com



**FIGURE 32-5: CLOCK TIMING**

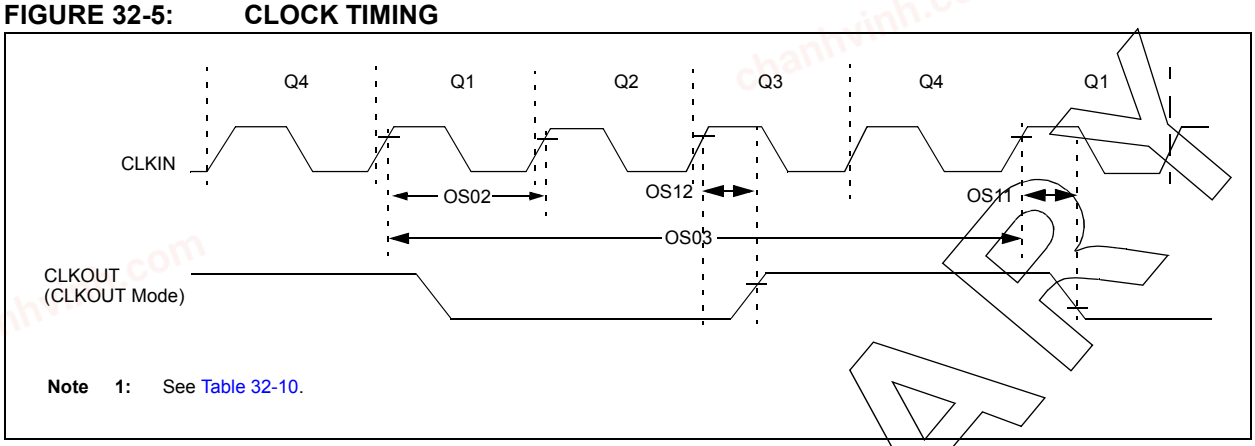


**Note 1:** See Table 32-10.

**TABLE 32-7: CLOCK OSCILLATOR TIMING REQUIREMENTS**

**Standard Operating Conditions (unless otherwise stated)**

| Param No. | Sym. | Characteristic | Min. | Typ† | Max. | Units | Conditions |
|---|---|---|---|---|---|---|---|
| OS01 | FOSC | External CLKIN Frequency(1) | DC | — | 0.5 | MHz | External Clock (ECL) |
| | | | DC | — | 4 | MHz | External Clock (ECM) |
| | | | DC | — | 20 | MHz | External Clock (ECH) |
| | | Oscillator Frequency(1) | — | 32.768 | — | kHz | LP Oscillator |
| | | | 0.1 | — | 4 | MHz | XT Oscillator |
| | | | 1 | — | 4 | MHz | HS Oscillator |
| | | | 1 | — | 20 | MHz | HS Oscillator, VDD > 2.3V |
| | | | DC | — | 4 | MHz | EXTRC, VDD > 2.0V |
| OS02 | TOSC | External CLKIN Period(1) | 27 | — | ∞ | µs | LP Oscillator |
| | | | 250 | — | ∞ | ns | XT Oscillator |
| | | | 50 | — | ∞ | ns | HS Oscillator |
| | | | 50 | — | ∞ | ns | External Clock (EC) |
| | | Oscillator Period(1) | — | 30.5 | — | µs | LP Oscillator |
| | | | 250 | — | 10,000 | ns | XT Oscillator |
| | | | 50 | — | 1,000 | ns | HS Oscillator |
| | | | 250 | — | — | ns | EXTRC |
| OS03 | TCY | Instruction Cycle Time(1) | 125 | TCY | DC | ns | TCY = 4/FOSC |
| OS04* | TosH, TosL | External CLKIN High, External CLKIN Low | 2 | — | — | µs | LP Oscillator |
| | | | 100 | — | — | ns | XT Oscillator |
| | | | 20 | — | — | ns | HS Oscillator |
| OS05* | TosR, TosF | External CLKIN Rise, External CLKIN Fall | 0 | — | ∞ | ns | LP Oscillator |
| | | | 0 | — | ∞ | ns | XT Oscillator |
| | | | 0 | — | ∞ | ns | HS Oscillator |

* These parameters are characterized but not tested.

† Data in "Typ" column is at 3.0V, 25°C unless otherwise stated. These parameters are for design guidance only and are not tested.

**Note 1:** Instruction cycle period (TCY) equals four times the input oscillator time base period. All specified values are based on characterization data for that particular oscillator type under standard operating conditions with the device executing code. Exceeding these specified limits may result in an unstable oscillator operation and/or higher than expected current consumption. All devices are tested to operate at "min" values with an external clock applied to OSC1 pin. When an external clock input is used, the "max" cycle time limit is "DC" (no clock) for all devices.

PRELIMINARY

 © 2013 Microchip Technology Inc.

chanhvinh.com



**TABLE 32-8: OSCILLATOR PARAMETERS**

| Standard Operating Conditions (unless otherwise stated) | | | | | | | | |
|---|---|---|---|---|---|---|---|---|
| Param No. | Sym. | Characteristic | Freq. Tolerance | Min. | Typ† | Max. | Units | Conditions |
| OS08 | HFOSC | Internal Calibrated HFINTOSC Frequency(1) | ±2% | — | 16.0 | — | MHz | VDD = 3.0V, TA = 25°C, **(Note 2)** |
| OS08A | MFOSC | Internal Calibrated MFINTOSC Frequency(1) | ±2% | — | 500 | — | kHz | VDD = 3.0V, TA = 25°C, **(Note 2)** |
| OS09 | LFOSC | Internal LFINTOSC Frequency | — | — | 31 | — | kHz | -40°C ≤ TA ≤ +125°C |
| OS10* | TIOSC ST | HFINTOSC Wake-up from Sleep Start-up Time | — | — | 3.2 | 8 | µs | |
| | | MFINTOSC Wake-up from Sleep Start-up Time | — | — | 24 | 35 | µs | |
| OS10A* | TLFOSC ST | LFINTOSC Wake-up from Sleep Start-up Time | — | — | 0.5 | — | ms | -40°C ≤ TA ≤ +125°C |

* These parameters are characterized but not tested.

† Data in "Typ" column is at 3.0V, 25°C unless otherwise stated. These parameters are for design guidance only and are not tested.

**Note 1:** To ensure these oscillator frequency tolerances, VDD and VSS must be capacitively decoupled as close to the device as possible. 0.1 µF and 0.01 µF values in parallel are recommended.

**2:** See Figure 32-6: HFINTOSC Frequency Accuracy Over Device VDD and Temperature, Figure 33-22: HFINTOSC Accuracy Over Temperature, VDD = 1.8V, PIC16LF1704/8 Only, and Figure 33-23: HFINTOSC Accuracy Over Temperature, 2.3V ≤ VDD ≤ 5.5V.

**3:** See Figure 33-20: LFINTOSC Frequency Over VDD and Temperature, PIC16LF1704/8 Only, and Figure 33-21: LFINTOSC Frequency Over VDD and Temperature, PIC16F1704/8 Only.

**FIGURE 32-6: HFINTOSC FREQUENCY ACCURACY OVER DEVICE VDD AND TEMPERATURE**

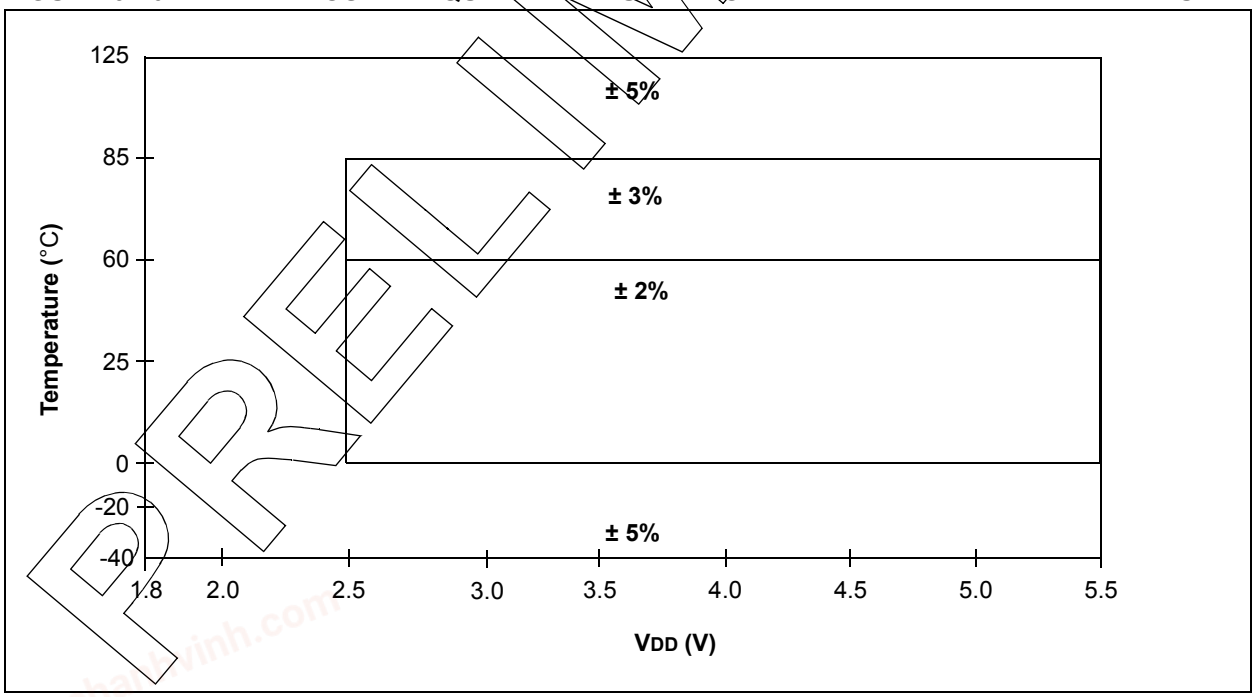


PRELIMINARY

chanhvinh.com



**TABLE 32-9: PLL CLOCK TIMING SPECIFICATIONS**

| Standard Operating Conditions (unless otherwise stated) | | | | | | | |
|---|---|---|---|---|---|---|---|
| **Param No.** | **Sym.** | **Characteristic** | **Min.** | **Typ†** | **Max.** | **Units** | **Conditions** |
| F10 | FOSC | Oscillator Frequency Range | 4 | — | 8 | MHz | |
| F11 | FSYS | On-Chip VCO System Frequency | 16 | — | 32 | MHz | |
| F12 | TRC | PLL Start-up Time (Lock Time) | — | — | 2 | ms | |
| F13* | ΔCLK | CLKOUT Stability (Jitter) | -0.25% | — | +0.25% | % | |

* These parameters are characterized but not tested.

† Data in “Typ” column is at 5V, 25°C unless otherwise stated. These parameters are for design guidance only and are not tested.

PRELIMINARY

 © 2013 Microchip Technology Inc.

chanhvinh.com



**FIGURE 32-7: CLKOUT AND I/O TIMING**

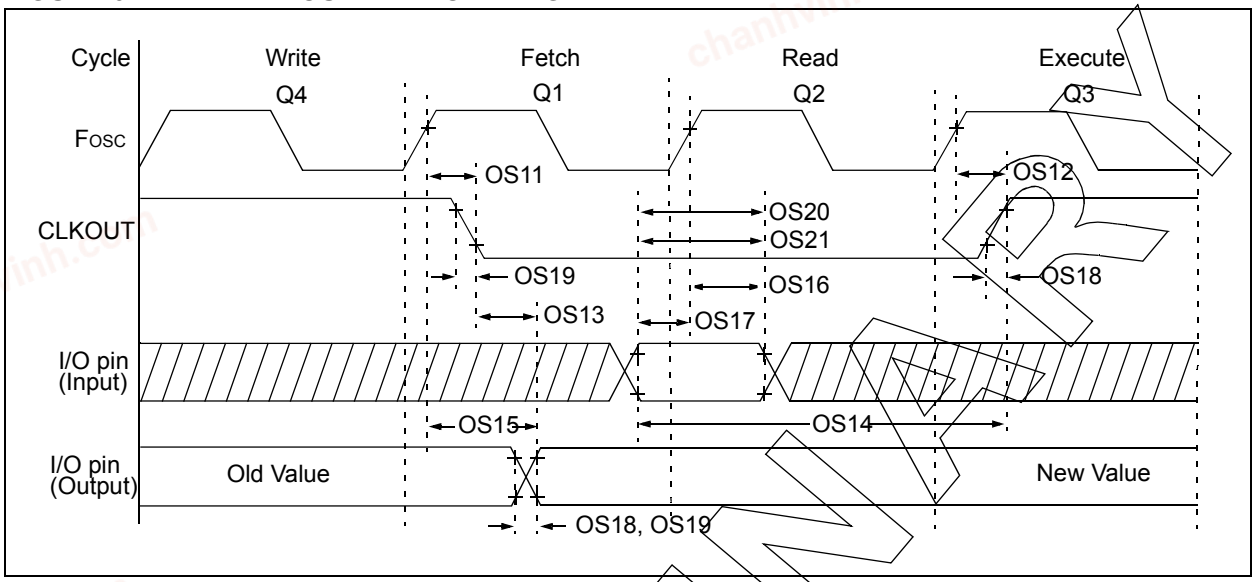


**TABLE 32-10: CLKOUT AND I/O TIMING PARAMETERS**

| Standard Operating Conditions (unless otherwise stated) | | | | | | | |
|---|---|---|---|---|---|---|---|
| **Param No.** | **Sym.** | **Characteristic** | **Min.** | **Typ†** | **Max.** | **Units** | **Conditions** |
| OS11 | TosH2ckL | FOSC↑ to CLKOUT↓ (1) | — | — | 70 | ns | 3.3V ≤ VDD ≤ 5.0V |
| OS12 | TosH2ckH | FOSC↑ to CLKOUT↑ (1) | — | — | 72 | ns | 3.3V ≤ VDD ≤ 5.0V |
| OS13 | TckL2ioV | CLKOUT↓ to Port out valid (1) | — | — | 20 | ns | |
| OS14 | TioV2ckH | Port input valid before CLKOUT↑ (1) | TOSC + 200 ns | — | — | ns | |
| OS15 | TosH2ioV | Fosc↑ (Q1 cycle) to Port out valid | — | 50 | 70* | ns | 3.3V ≤ VDD ≤ 5.0V |
| OS16 | TosH2ioI | Fosc↑ (Q2 cycle) to Port input invalid (I/O in hold time) | 50 | — | — | ns | 3.3V ≤ VDD ≤ 5.0V |
| OS17 | TioV2osH | Port input valid to Fosc↑ (Q2 cycle) (I/O in setup time) | 20 | — | — | ns | |
| OS18* | TioR | Port output rise time | —<br>— | 40<br>15 | 72<br>32 | ns | VDD = 1.8V<br>3.3V ≤ VDD ≤ 5.0V |
| OS19* | TioF | Port output fall time | —<br>— | 28<br>15 | 55<br>30 | ns | VDD = 1.8V<br>3.3V ≤ VDD ≤ 5.0V |
| OS20* | Tinp | INT pin input high or low time | 25 | — | — | ns | |
| OS21* | Tioc | Interrupt-on-change new input level time | 25 | — | — | ns | |

* These parameters are characterized but not tested.

† Data in "Typ" column is at 3.0V, 25°C unless otherwise stated.

**Note 1:** Measurements are taken in EXTRC mode where CLKOUT output is 4 x TOSC.

PRELIMINARY

chanhvinh.com



**FIGURE 32-8: RESET, WATCHDOG TIMER, OSCILLATOR START-UP TIMER AND POWER-UP TIMER TIMING**

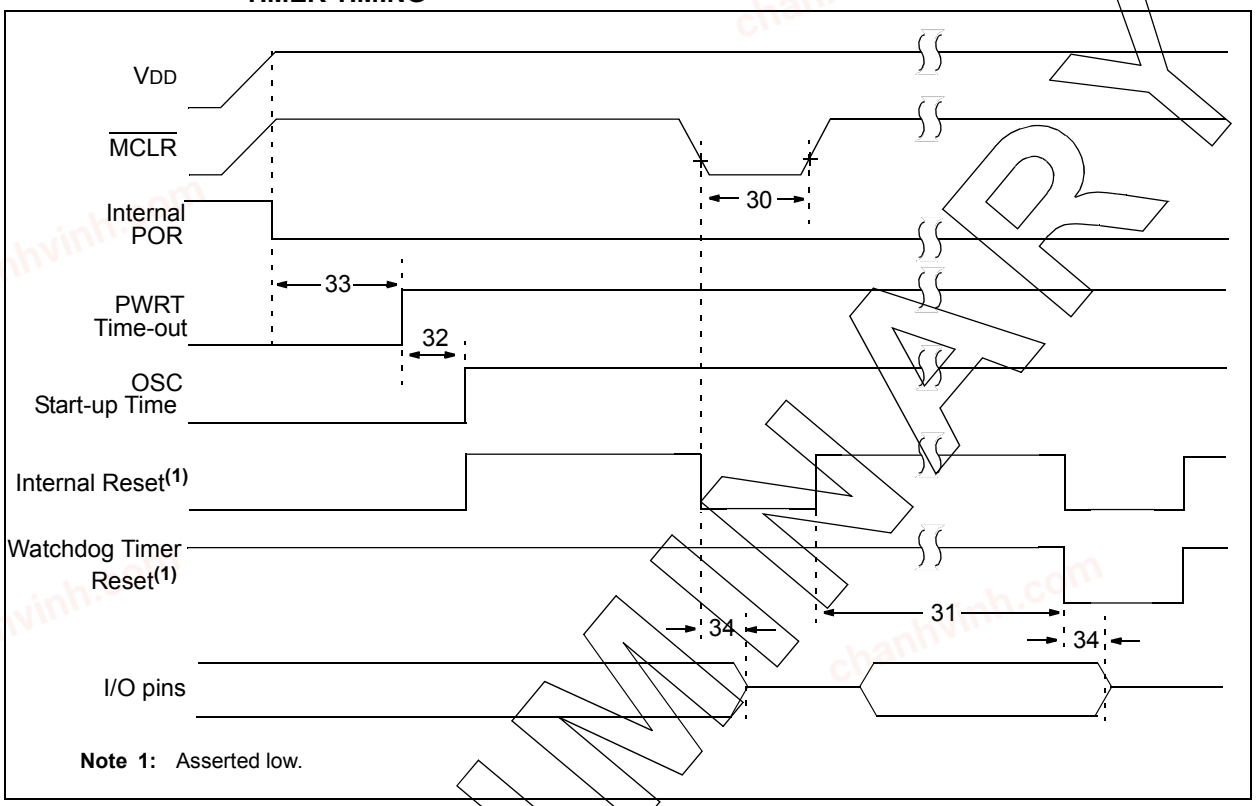


**Note 1:** Asserted low.

PRELIMINARY

 © 2013 Microchip Technology Inc.

chanhvinh.com



**TABLE 32-11: RESET, WATCHDOG TIMER, OSCILLATOR START-UP TIMER, POWER-UP TIMER AND BROWN-OUT RESET PARAMETERS**

| Standard Operating Conditions (unless otherwise stated) | | | | | | | |
|---|---|---|---|---|---|---|---|
| **Param No.** | **Sym.** | **Characteristic** | **Min.** | **Typ†** | **Max.** | **Units** | **Conditions** |
| 30 | TMCL | $\overline{MCLR}$ Pulse Width (low) | 2 | — | — | µs | |
| 31 | TWDTLP | Low-Power Watchdog Timer Time-out Period | 10 | 16 | 27 | ms | VDD = 3.3V-5V 1:16 Prescaler used |
| 32 | TOST | Oscillator Start-up Timer Period(1) | — | 1024 | — | Tosc | |
| 33* | TPWRT | Power-up Timer Period, $\overline{PWRTE}$ = 0 | 40 | 65 | 140 | ms | |
| 34* | TIOZ | I/O high-impedance from $\overline{MCLR}$ Low or Watchdog Timer Reset | — | — | 2.0 | µs | |
| 35 | VBOR | Brown-out Reset Voltage(2) | 2.55 | 2.70 | 2.85 | V | BORV = 0 |
| | | | 2.30 | 2.45 | 2.60 | V | BORV = 1 (PIC16F1704/8) |
| | | | 1.80 | 1.90 | 2.10 | V | BORV = 1 (PIC16LF1704/8) |
| 35A | VLPBOR | Low-Power Brown-out | 1.8 | 2.1 | 2.5 | V | LPBOR = 1 |
| 36* | VHYST | Brown-out Reset Hysteresis | 0 | 25 | 75 | mV | -40°C ≤ TA ≤ +85°C |
| 37* | TBORDC | Brown-out Reset DC Response Time | 1 | 3 | 35 | µs | VDD ≤ VBOR |

* These parameters are characterized but not tested.

† Data in "Typ" column is at 3.0V, 25°C unless otherwise stated. These parameters are for design guidance only and are not tested.

**Note 1:** By design, the Oscillator Start-up Timer (OST) counts the first 1024 cycles, independent of frequency.

**2:** To ensure these voltage tolerances, VDD and VSS must be capacitively decoupled as close to the device as possible. 0.1 µF and 0.01 µF values in parallel are recommended.

PRELIMINARY

chanhvinh.com



**FIGURE 32-9: TIMER0 AND TIMER1 EXTERNAL CLOCK TIMINGS**

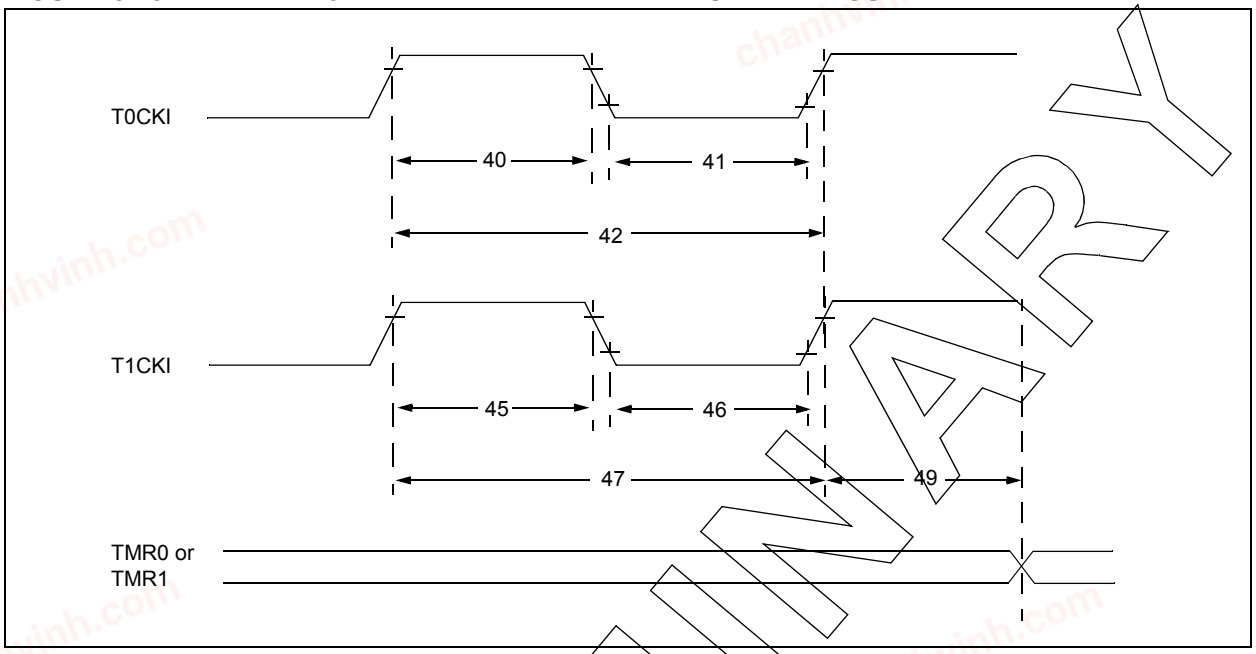


**FIGURE 32-10: BROWN-OUT RESET TIMING AND CHARACTERISTICS**

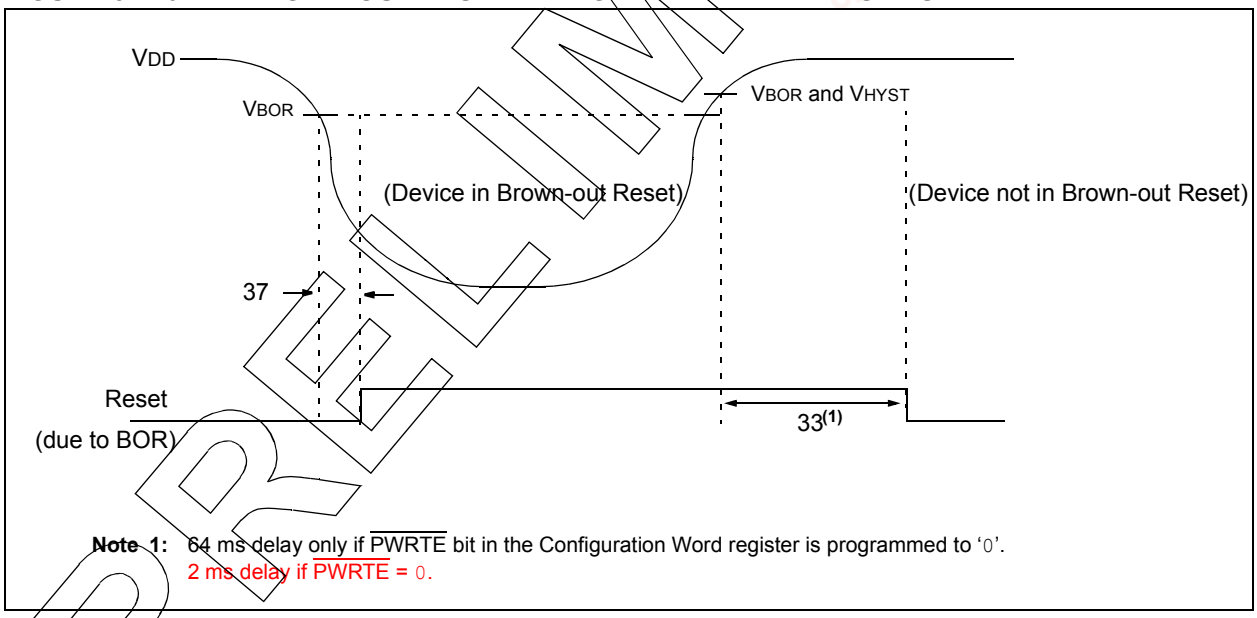


**Note 1:** 64 ms delay only if $\overline{\text{PWRTE}}$ bit in the Configuration Word register is programmed to '0'. 2 ms delay if $\overline{\text{PWRTE}}$ = 0.

PRELIMINARY

 © 2013 Microchip Technology Inc.

chanhvinh.com



**TABLE 32-12: TIMER0 AND TIMER1 EXTERNAL CLOCK REQUIREMENTS**

| Standard Operating Conditions (unless otherwise stated)<br>Operating Temperature -40°C ≤ TA ≤ +125°C | | | | | | | | | |
|---|---|---|---|---|---|---|---|---|---|
| **Param No.** | **Sym.** | **Characteristic** | | **Min.** | **Typ†** | **Max.** | **Units** | **Conditions** |
| 40* | TT0H | T0CKI High Pulse Width | No Prescaler | 0.5 TCY + 20 | — | — | ns | |
| | | | With Prescaler | 10 | — | — | ns | |
| 41* | TT0L | T0CKI Low Pulse Width | No Prescaler | 0.5 TCY + 20 | — | — | ns | |
| | | | With Prescaler | 10 | — | — | ns | |
| 42* | TT0P | T0CKI Period | | Greater of: 20 or $\frac{T_{CY} + 40}{N}$ | — | — | ns | N = prescale value |
| 45* | TT1H | T1CKI High Time | Synchronous, No Prescaler | 0.5 TCY + 20 | — | — | ns | |
| | | | Synchronous, with Prescaler | 15 | — | — | ns | |
| | | | Asynchronous | 30 | — | — | ns | |
| 46* | TT1L | T1CKI Low Time | Synchronous, No Prescaler | 0.5 TCY + 20 | — | — | ns | |
| | | | Synchronous, with Prescaler | 15 | — | — | ns | |
| | | | Asynchronous | 30 | — | — | ns | |
| 47* | TT1P | T1CKI Input Period | Synchronous | Greater of: 30 or $\frac{T_{CY} + 40}{N}$ | — | — | ns | N = prescale value |
| | | | Asynchronous | 60 | — | — | ns | |
| 48 | FT1 | Secondary Oscillator Input Frequency Range (oscillator enabled by setting bit T1OSCEN) | | 32.4 | 32.768 | 33.1 | kHz | |
| 49* | TCKEZTMR1 | Delay from External Clock Edge to Timer Increment | | 2 TOSC | — | 7 TOSC | — | Timers in Sync mode |

* These parameters are characterized but not tested.

† Data in "Typ" column is at 3.0V, 25°C unless otherwise stated. These parameters are for design guidance only and are not tested.

PRELIMINARY

chanhvinh.com



**FIGURE 32-11: CAPTURE/COMPARE/PWM TIMINGS (CCP)**

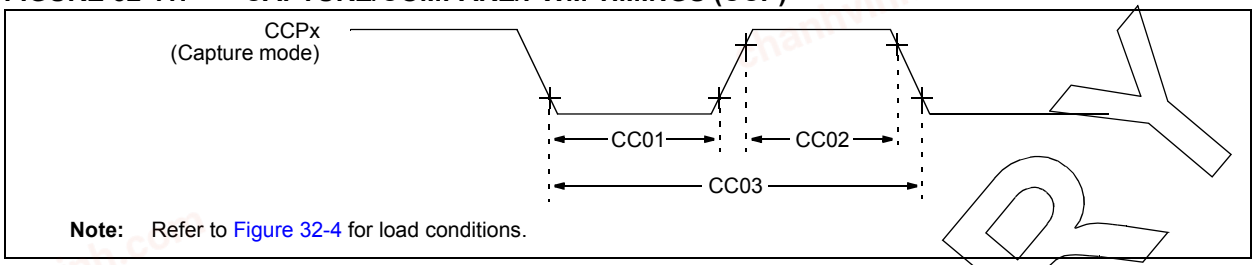


**Note:** Refer to Figure 32-4 for load conditions.

**TABLE 32-13: CAPTURE/COMPARE/PWM REQUIREMENTS (CCP)**

| **Standard Operating Conditions (unless otherwise stated)**<br>Operating Temperature -40°C ≤ TA ≤ +125°C | | | | | | | | |
|---|---|---|---|---|---|---|---|---|
| **Param No.** | **Sym.** | **Characteristic** | | **Min.** | **Typ†** | **Max.** | **Units** | **Conditions** |
| CC01* | TccL | CCPx Input Low Time | No Prescaler | 0.5TCY + 20 | — | — | ns | |
| | | | With Prescaler | 20 | — | — | ns | |
| CC02* | TccH | CCPx Input High Time | No Prescaler | 0.5TCY + 20 | — | — | ns | |
| | | | With Prescaler | 20 | — | — | ns | |
| CC03* | TccP | CCPx Input Period | | $\frac{3T_{CY} + 40}{N}$ | — | — | ns | N = prescale value |

* These parameters are characterized but not tested.

† Data in "Typ" column is at 3.0V, 25°C unless otherwise stated. These parameters are for design guidance only and are not tested.

PRELIMINARY

 © 2013 Microchip Technology Inc.

chanhvinh.com



**FIGURE 32-12: CLC PROPAGATION TIMING**

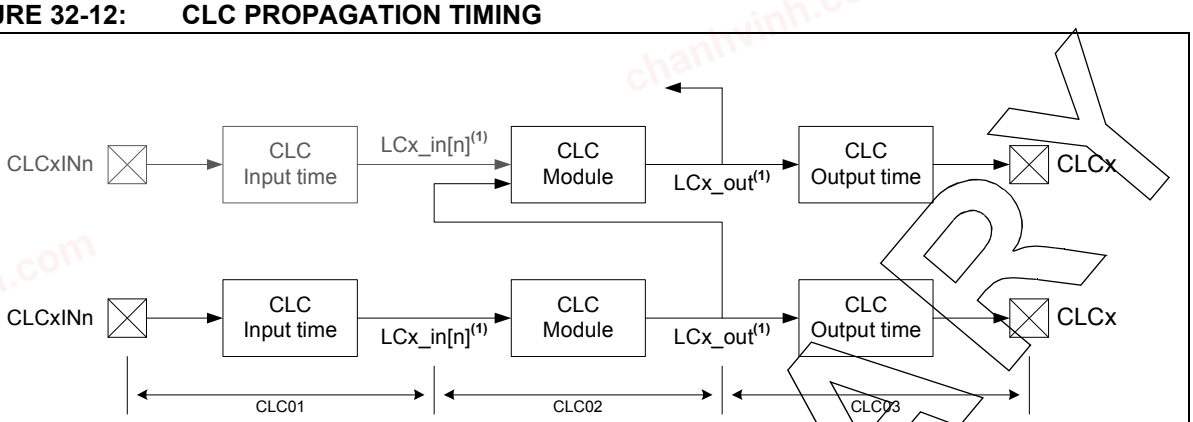


**Note 1:** See Figure 19-1 to identify specific CLC signals.

**TABLE 32-14: CONFIGURATION LOGIC CELL (CLC) CHARACTERISTICS**

| **Standard Operating Conditions (unless otherwise stated)**<br>Operating temperature -40°C ≤ TA ≤ +125°C | | | | | | | |
|---|---|---|---|---|---|---|---|
| **Param. No.** | **Sym.** | **Characteristic** | **Min.** | **Typ†** | **Max.** | **Units** | **Conditions** |
| CLC01* | TCLCIN | CLC input time | — | 7 | OS17 | ns | **(Note 1)** |
| CLC02* | TCLC | CLC module input to output propagation time | —<br>— | 24<br>12 | —<br>— | ns<br>ns | VDD = 1.8V<br>VDD > 3.6V |
| CLC03* | TCLCOUT | CLC output time Rise Time | — | OS18 | — | — | **(Note 1)** |
| | | Fall Time | — | OS19 | — | — | **(Note 1)** |
| CLC04* | FCLCMAX | CLC maximum switching frequency | — | 45 | — | MHz | |

* These parameters are characterized but not tested.

† Data in "Typ" column is at 3.0V, 25°C unless otherwise stated. These parameters are for design guidance only and are not tested.

**Note 1:** See Table 32-10 for OS17, OS18 and OS19 rise and fall times.

PRELIMINARY

chanhvinh.com



**TABLE 32-15: ANALOG-TO-DIGITAL CONVERTER (ADC) CHARACTERISTICS(1,2,3,4).**

| **Operating Conditions (unless otherwise stated)**<br>VDD = 3.0V, TA = 25°C, Single-ended, 2 µs TAD, VREF+ = 3V, VREF- = VSS | | | | | | | |
|---|---|---|---|---|---|---|---|
| **Param No.** | **Sym.** | **Characteristic** | **Min.** | **Typ†** | **Max.** | **Units** | **Conditions** |
| AD01 | NR | Resolution | — | — | 10 | bit | |
| AD02 | EIL | Integral Error | — | — | ±1.7 | LSb | VREF = 3.0V |
| AD03 | EDL | Differential Error | — | — | ±1 | LSb | No missing codes, VREF = 3.0V |
| AD04 | EOFF | Offset Error | — | — | ±2.5 | LSb | VREF = 3.0V |
| AD05 | EGN | Gain Error | — | — | ±2.0 | LSb | VREF = 3.0V |
| AD06 | VREF | Reference Voltage | 1.8 | — | VDD | V | VREF = (VREF+ minus VREF-) |
| AD07 | VAIN | Full-Scale Range | VSS | — | VREF | V | |
| AD08 | ZAIN | Recommended Impedance of Analog Voltage Source | — | — | 10 | kΩ | Can go higher if external 0.01µF capacitor is present on input pin. |

* These parameters are characterized but not tested.

† Data in "Typ" column is at 3.0V, 25°C unless otherwise stated. These parameters are for design guidance only and are not tested.

**Note 1:** Total Absolute Error includes integral, differential, offset and gain errors.

**2:** The ADC conversion result never decreases with an increase in the input voltage and has no missing codes.

**3:** ADC VREF is from external VREF+ pin, VDD pin or FVR, whichever is selected as reference input.

**4:** See **Section 33.0 "DC and AC Characteristics Graphs and Charts"** for operating characterization.

**TABLE 32-16: ADC CONVERSION REQUIREMENTS**

| **Standard Operating Conditions (unless otherwise stated)** | | | | | | | |
|---|---|---|---|---|---|---|---|
| **Param No.** | **Sym.** | **Characteristic** | **Min.** | **Typ†** | **Max.** | **Units** | **Conditions** |
| AD130* | TAD | ADC Clock Period (TADC) | 1.0 | — | 9.0 | µs | FOSC-based |
| | | ADC Internal FRC Oscillator Period (TFRC) | 1.0 | 2.5 | 6.0 | µs | ADCS<1:0> = 11 (ADC FRC mode) |
| AD131 | TCNV | Conversion Time (not including Acquisition Time)(1) | — | 13 | — | TAD | Set GO/$\overline{\text{DONE}}$ bit to conversion complete |
| AD132* | TACQ | Acquisition Time | — | 5.0 | — | µs | |
| AD133* | THCD | Holding Capacitor Disconnect Time | — | 1/2 TAD | — | | ADCS<2:0> ≠ x11 (FOSC based) |
| | | | — | 1/2 TAD + 1TCY | — | | ADCS<2:0> = x11 (FRC based) |

* These parameters are characterized but not tested.

† Data in "Typ" column is at 3.0V, 25°C unless otherwise stated. These parameters are for design guidance only and are not tested.

**Note 1:** The ADRES register may be read on the following TCY cycle.

PRELIMINARY

 © 2013 Microchip Technology Inc.

chanhvinh.com



**FIGURE 32-13: ADC CONVERSION TIMING (ADC CLOCK Fosc-BASED)**

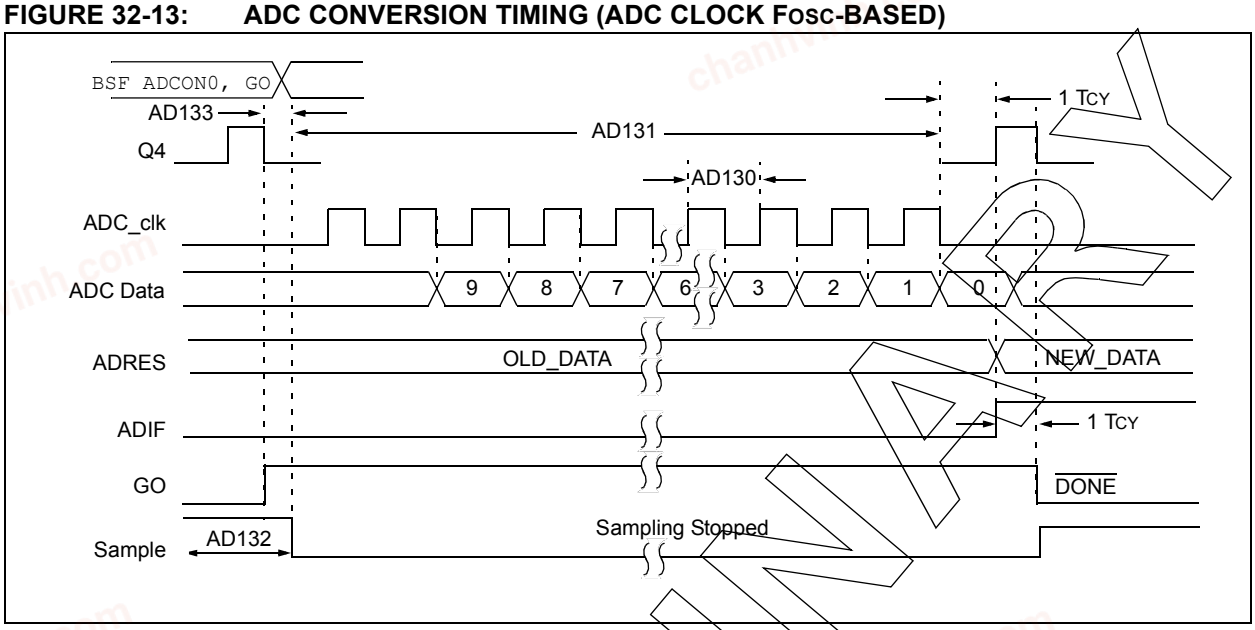


**FIGURE 32-14: ADC CONVERSION TIMING (ADC CLOCK FROM FRC)**

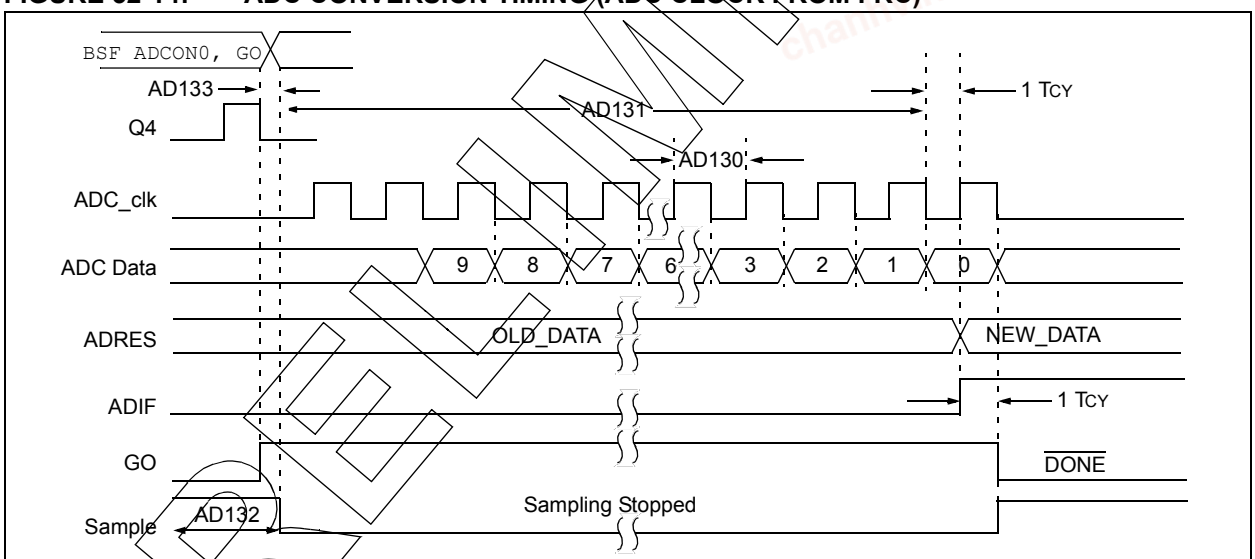


**Note 1:** If the ADC clock source is selected as FRC, a time of TCY is added before the ADC clock starts. This allows the SLEEP instruction to be executed.

PRELIMINARY

chanhvinh.com



**TABLE 32-17: OPERATIONAL AMPLIFIER (OPA)**

| Operating Conditions (unless otherwise stated)<br>VDD = 3.0V, TA = 25°C, OPAxSP = 1 (High GBWP mode) | | | | | | | |
|---|---|---|---|---|---|---|---|
| **Param No.** | **Symbol** | **Parameters** | **Min.** | **Typ.** | **Max.** | **Units** | **Conditions** |
| OPA01* | GBWP | Gain Bandwidth Product | — | 2 | — | MHz | |
| OPA02* | TON | Turn on Time | — | 10 | — | µs | |
| OPA03* | PM | Phase Margin | — | 40 | — | degrees | |
| OPA04* | SR | Slew Rate | — | 3 | — | V/µs | |
| OPA05 | OFF | Offset | — | ±3 | ±9 | mV | |
| OPA06 | CMRR | Common Mode Rejection Ratio | 52 | 70 | — | dB | |
| OPA07* | AOL | Open Loop Gain | — | 90 | — | dB | |
| OPA08 | VICM | Input Common Mode Voltage | 0 | — | VDD | V | VDD > 2.5V |
| OPA09* | PSRR | Power Supply Rejection Ratio | — | 80 | — | dB | |

* These parameters are characterized but not tested.

**TABLE 32-18: COMPARATOR SPECIFICATIONS**

| Operating Conditions (unless otherwise stated)<br>VDD = 3.0V, TA = 25°C<br>See **Section 33.0 "DC and AC Characteristics Graphs and Charts"** for operating characterization. | | | | | | | |
|---|---|---|---|---|---|---|---|
| **Param No.** | **Sym.** | **Characteristics** | **Min.** | **Typ.** | **Max.** | **Units** | **Comments** |
| CM01 | VIOFF | Input Offset Voltage | — | ±2.5 | ±5 | mV | CxSP = 1,<br>VICM = VDD/2 |
| CM02 | VICM | Input Common Mode Voltage | 0 | — | VDD | V | |
| CM03 | CMRR | Common Mode Rejection Ratio | 40 | 50 | — | dB | |
| CM04A | TRESP(1) | Response Time Rising Edge | — | 60 | 85 | ns | CxSP = 1 |
| CM04B | | Response Time Falling Edge | — | 60 | 90 | ns | CxSP = 1 |
| CM04C | | Response Time Rising Edge | — | 85 | — | ns | CxSP = 0 |
| CM04D | | Response Time Falling Edge | — | 85 | — | ns | CxSP = 0 |
| CM05* | TMC2OV | Comparator Mode Change to Output Valid* | — | — | 10 | µs | |
| CM06 | CHYSTER | Comparator Hysteresis | 20 | 45 | 75 | mV | CxHYS = 1,<br>CxSP = 1 |

* These parameters are characterized but not tested.

**Note 1:** Response time measured with one comparator input at VDD/2, while the other input transitions from VSS to VDD.

PRELIMINARY

 © 2013 Microchip Technology Inc.

chanhvinh.com



**TABLE 32-19: DIGITAL-TO-ANALOG CONVERTER (DAC) SPECIFICATIONS**

| **Operating Conditions (unless otherwise stated)**<br>VDD = 3.0V, TA = 25°C<br>See **Section 33.0 "DC and AC Characteristics Graphs and Charts"** for operating characterization. | | | | | | | |
|---|---|---|---|---|---|---|---|
| **Param No.** | **Sym.** | **Characteristics** | **Min.** | **Typ.** | **Max.** | **Units** | **Comments** |
| DAC01* | CLSB | Step Size | — | VDD/256 | — | V | |
| DAC02* | CACC | Absolute Accuracy | — | — | ± 1.5 | LSb | |
| DAC03* | CR | Unit Resistor Value (R) | — | 600 | — | Ω | |
| DAC04* | CST | Settling Time(1) | — | — | 10 | µs | |

* These parameters are characterized but not tested.

**Note 1:** Settling time measured while DACR<7:0> transitions from '0x00' to '0xFF'.

**TABLE 32-20: ZERO CROSS PIN SPECIFICATIONS**

| **Operating Conditions (unless otherwise stated)**<br>VDD = 3.0V, TA = 25°C | | | | | | | |
|---|---|---|---|---|---|---|---|
| **Param. No.** | **Sym.** | **Characteristics** | **Min.** | **Typ.** | **Max.** | **Units** | **Comments** |
| ZC01 | ZCPINV | Voltage on Zero Cross Pin | — | 1 | — | V | |
| ZC02 | ZCSRC | Source current | — | 300 | — | µA | |
| ZC03 | ZCSNK | Sink current | — | 300 | — | µA | |
| ZC04 | ZCISW | Response Time Rising Edge | — | 1 | — | µs | |
| | | Response Time Falling Edge | — | 1 | — | µs | |
| ZC05 | ZCOUT | Response Time Rising Edge | — | 1 | — | µs | |
| | | Response Time Falling Edge | — | 1 | — | µs | |

* These parameters are characterized but not tested.

PRELIMINARY

chanhvinh.com



**FIGURE 32-15: USART SYNCHRONOUS TRANSMISSION (MASTER/SLAVE) TIMING**

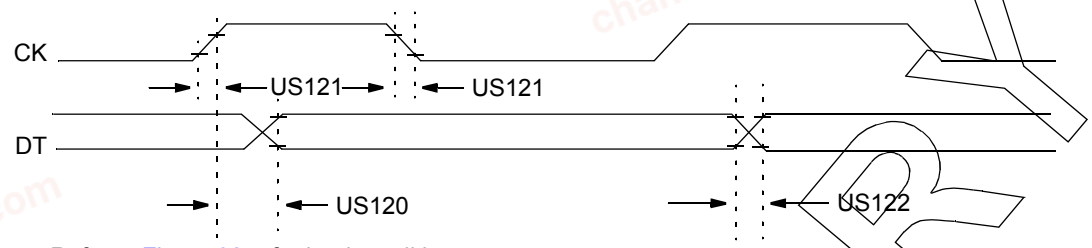


**Note:** Refer to Figure 32-4 for load conditions.

**TABLE 32-21: USART SYNCHRONOUS TRANSMISSION REQUIREMENTS**

| Standard Operating Conditions (unless otherwise stated) | | | | | | |
|---|---|---|---|---|---|---|
| **Param. No.** | **Symbol** | **Characteristic** | **Min.** | **Max.** | **Units** | **Conditions** |
| US120 | TCKH2DTV | SYNC XMIT (Master and Slave) Clock high to data-out valid | — | 80 | ns | 3.0V ≤ VDD ≤ 5.5V |
| | | | — | 100 | ns | 1.8V ≤ VDD ≤ 5.5V |
| US121 | TCKRF | Clock out rise time and fall time (Master mode) | — | 45 | ns | 3.0V ≤ VDD ≤ 5.5V |
| | | | — | 50 | ns | 1.8V ≤ VDD ≤ 5.5V |
| US122 | TDTRF | Data-out rise time and fall time | — | 45 | ns | 3.0V ≤ VDD ≤ 5.5V |
| | | | — | 50 | ns | 1.8V ≤ VDD ≤ 5.5V |

**FIGURE 32-16: USART SYNCHRONOUS RECEIVE (MASTER/SLAVE) TIMING**

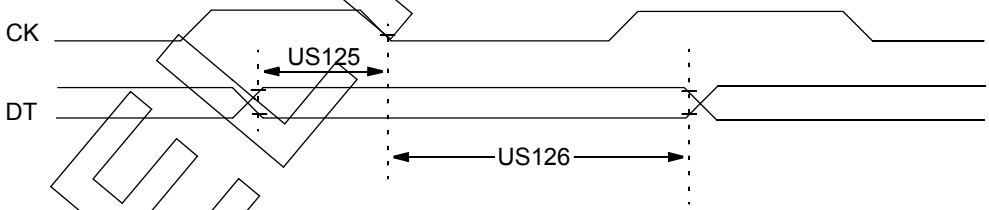


**Note:** Refer to Figure 32-4 for load conditions.

**TABLE 32-22: USART SYNCHRONOUS RECEIVE REQUIREMENTS**

| Standard Operating Conditions (unless otherwise stated) | | | | | | |
|---|---|---|---|---|---|---|
| **Param. No.** | **Symbol** | **Characteristic** | **Min.** | **Max.** | **Units** | **Conditions** |
| US125 | TDTV2CKL | SYNC RCV (Master and Slave) Data-setup before CK ↓ (DT hold time) | 10 | — | ns | |
| US126 | TCKL2DTL | Data-hold after CK ↓ (DT hold time) | 15 | — | ns | |

PRELIMINARY

 © 2013 Microchip Technology Inc.

chanhvinh.com



**FIGURE 32-17: SPI MASTER MODE TIMING (CKE = 0, SMP = 0)**

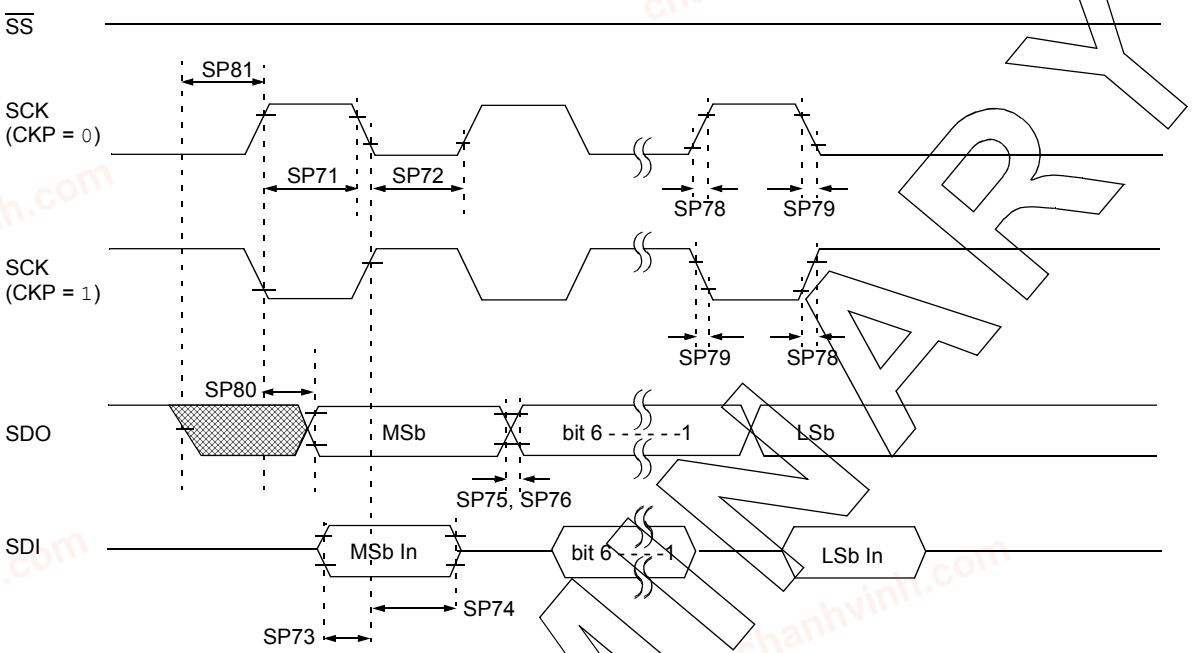


**Note:** Refer to Figure 32-4 for load conditions.

**FIGURE 32-18: SPI MASTER MODE TIMING (CKE = 1, SMP = 1)**

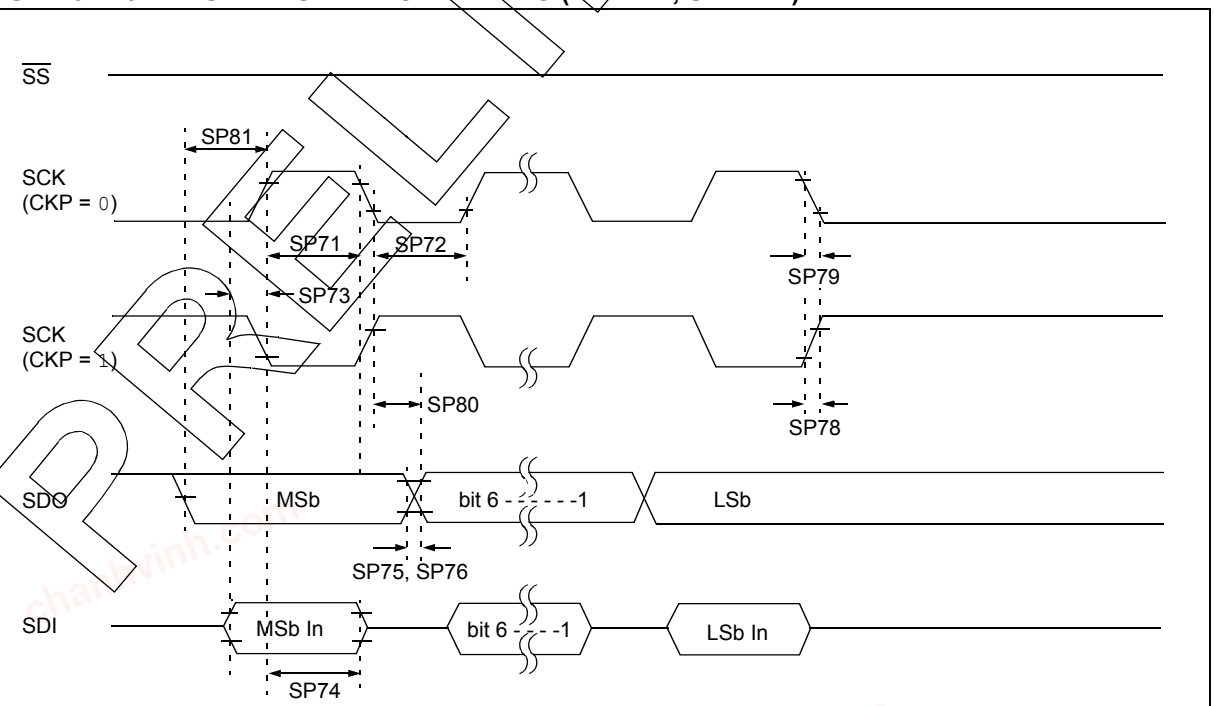


**Note:** Refer to Figure 32-4 for load conditions.

PRELIMINARY

chanhvinh.com



**FIGURE 32-19: SPI SLAVE MODE TIMING (CKE = 0)**

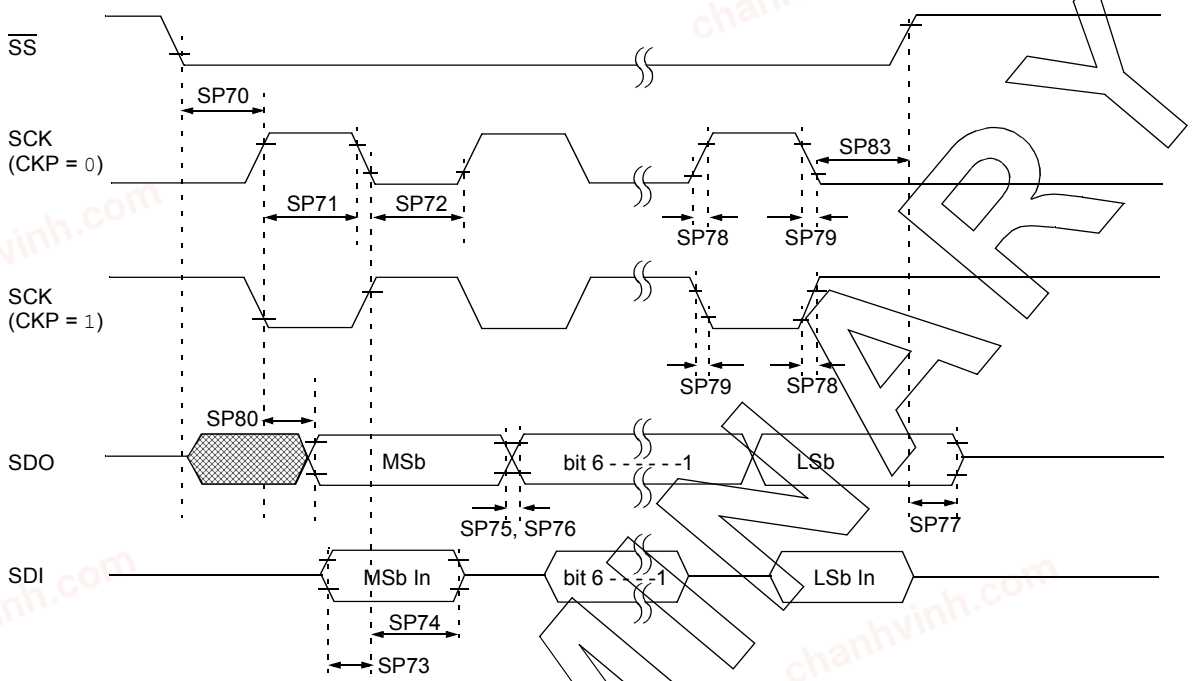


**Note:** Refer to Figure 32-4 for load conditions.

**FIGURE 32-20: SPI SLAVE MODE TIMING (CKE = 1)**

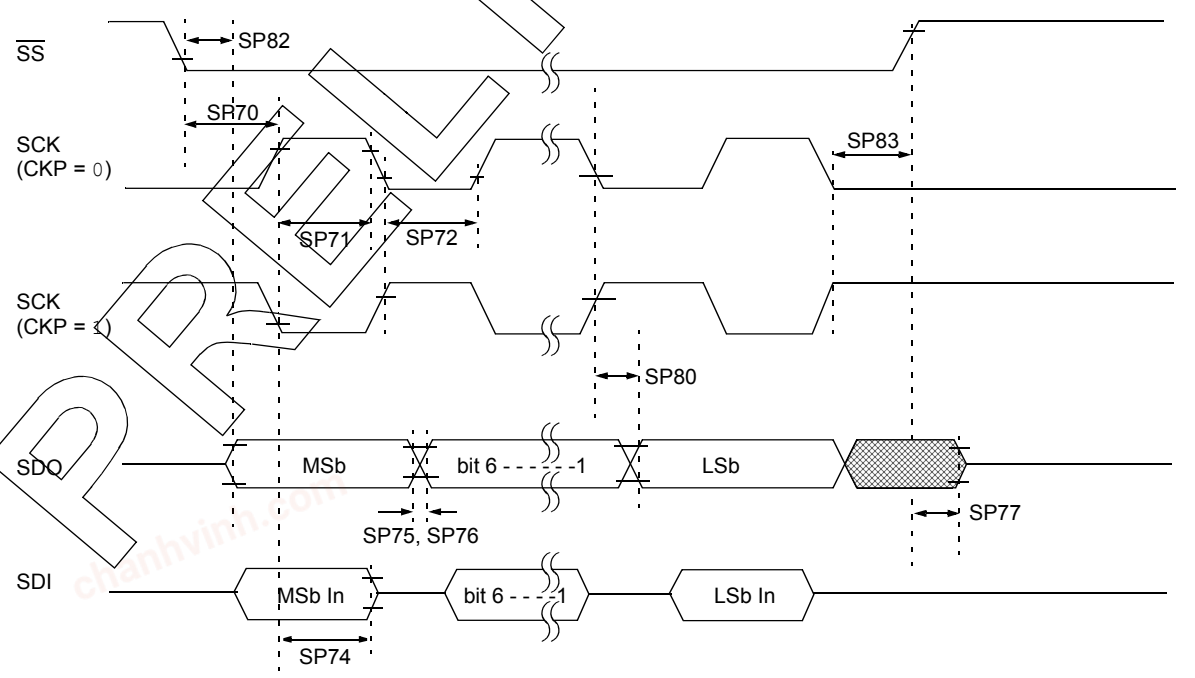


**Note:** Refer to Figure 32-4 for load conditions.

PRELIMINARY

 © 2013 Microchip Technology Inc.

chanhvinh.com



**TABLE 32-23: SPI MODE REQUIREMENTS**

| Standard Operating Conditions (unless otherwise stated) | | | | | | | |
|---|---|---|---|---|---|---|---|
| **Param No.** | **Symbol** | **Characteristic** | **Min.** | **Typ†** | **Max.** | **Units** | **Conditions** |
| SP70* | TssL2scH, TssL2scL | $\overline{SS}$↓ to SCK↓ or SCK↑ input | Tcy | — | — | ns | |
| SP71* | TscH | SCK input high time (Slave mode) | Tcy + 20 | — | — | ns | |
| SP72* | TscL | SCK input low time (Slave mode) | Tcy + 20 | — | — | ns | |
| SP73* | TdiV2scH, TdiV2scL | Setup time of SDI data input to SCK edge | 100 | — | — | ns | |
| SP74* | TscH2diL, TscL2diL | Hold time of SDI data input to SCK edge | 100 | — | — | ns | |
| SP75* | TdoR | SDO data output rise time | — | 10 | 25 | ns | 3.0V ≤ VDD ≤ 5.5V |
| | | | — | 25 | 50 | ns | 1.8V ≤ VDD ≤ 5.5V |
| SP76* | TdoF | SDO data output fall time | — | 10 | 25 | ns | |
| SP77* | TssH2doZ | $\overline{SS}$↑ to SDO output high-impedance | 10 | — | 50 | ns | |
| SP78* | TscR | SCK output rise time (Master mode) | — | 10 | 25 | ns | 3.0V ≤ VDD ≤ 5.5V |
| | | | — | 25 | 50 | ns | 1.8V ≤ VDD ≤ 5.5V |
| SP79* | TscF | SCK output fall time (Master mode) | — | 10 | 25 | ns | |
| SP80* | TscH2doV, TscL2doV | SDO data output valid after SCK edge | — | — | 50 | ns | 3.0V ≤ VDD ≤ 5.5V |
| | | | — | — | 145 | ns | 1.8V ≤ VDD ≤ 5.5V |
| SP81* | TdoV2scH, TdoV2scL | SDO data output setup to SCK edge | 1 Tcy | — | — | ns | |
| SP82* | TssL2doV | SDO data output valid after $\overline{SS}$↓ edge | — | — | 50 | ns | |
| SP83* | TscH2ssH, TscL2ssH | $\overline{SS}$ ↑ after SCK edge | 1.5 Tcy + 40 | — | — | ns | |

* These parameters are characterized but not tested.

† Data in "Typ" column is at 3.0V, 25°C unless otherwise stated. These parameters are for design guidance only and are not tested.

PRELIMINARY

chanhvinh.com



**FIGURE 32-21: I²C™ BUS START/STOP BITS TIMING**

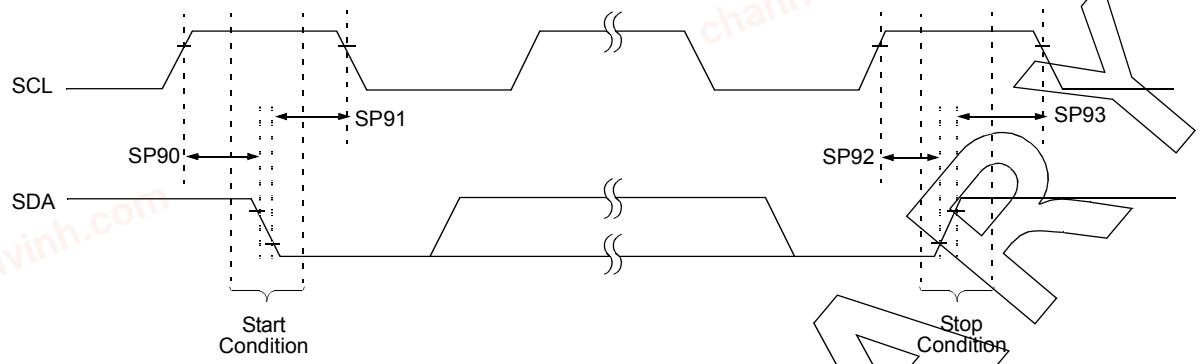


**Note**: Refer to Figure 32-4 for load conditions.

**TABLE 32-24: I²C™ BUS START/STOP BITS REQUIREMENTS**

**Standard Operating Conditions (unless otherwise stated)**

| Param No. | Symbol | Characteristic | | Min. | Typ | Max. | Units | Conditions |
|---|---|---|---|---|---|---|---|---|
| SP90* | TSU:STA | Start condition Setup time | 100 kHz mode | 4700 | — | — | ns | Only relevant for Repeated Start condition |
| | | | 400 kHz mode | 600 | — | — | | |
| SP91* | THD:STA | Start condition Hold time | 100 kHz mode | 4000 | — | — | ns | After this period, the first clock pulse is generated |
| | | | 400 kHz mode | 600 | — | — | | |
| SP92* | TSU:STO | Stop condition Setup time | 100 kHz mode | 4700 | — | — | ns | |
| | | | 400 kHz mode | 600 | — | — | | |
| SP93 | THD:STO | Stop condition Hold time | 100 kHz mode | 4000 | — | — | ns | |
| | | | 400 kHz mode | 600 | — | — | | |

* These parameters are characterized but not tested.

**FIGURE 32-22: I²C™ BUS DATA TIMING**

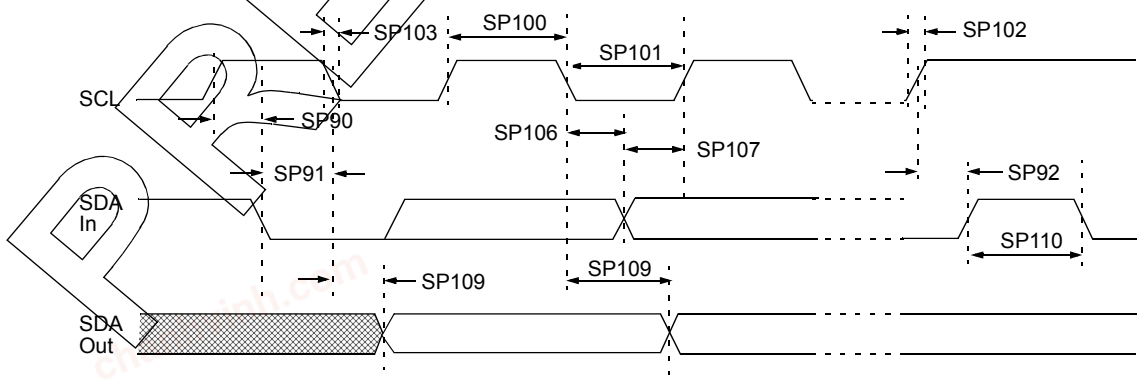


**Note:** Refer to Figure 32-4 for load conditions.

 © 2013 Microchip Technology Inc.

chanhvinh.com



**TABLE 32-25: I²C™ BUS DATA REQUIREMENTS**

| Standard Operating Conditions (unless otherwise stated) | | | | | | | |
|---|---|---|---|---|---|---|---|
| **Param. No.** | **Symbol** | **Characteristic** | | **Min.** | **Max.** | **Units** | **Conditions** |
| SP100* | THIGH | Clock high time | 100 kHz mode | 4.0 | — | µs | Device must operate at a minimum of 1.5 MHz |
| | | | 400 kHz mode | 0.6 | — | µs | Device must operate at a minimum of 10 MHz |
| | | | SSP module | 1.5TCY | — | | |
| SP101* | TLOW | Clock low time | 100 kHz mode | 4.7 | — | µs | Device must operate at a minimum of 1.5 MHz |
| | | | 400 kHz mode | 1.3 | — | µs | Device must operate at a minimum of 10 MHz |
| | | | SSP module | 1.5TCY | — | | |
| SP102* | TR | SDA and SCL rise time | 100 kHz mode | — | 1000 | ns | |
| | | | 400 kHz mode | 20 + 0.1CB | 300 | ns | CB is specified to be from 10-400 pF |
| SP103* | TF | SDA and SCL fall time | 100 kHz mode | — | 250 | ns | |
| | | | 400 kHz mode | 20 + 0.1CB | 250 | ns | CB is specified to be from 10-400 pF |
| SP106* | THD:DAT | Data input hold time | 100 kHz mode | 0 | — | ns | |
| | | | 400 kHz mode | 0 | 0.9 | µs | |
| SP107* | TSU:DAT | Data input setup time | 100 kHz mode | 250 | — | ns | **(Note 2)** |
| | | | 400 kHz mode | 100 | — | ns | |
| SP109* | TAA | Output valid from clock | 100 kHz mode | — | 3500 | ns | **(Note 1)** |
| | | | 400 kHz mode | — | — | ns | |
| SP110* | TBUF | Bus free time | 100 kHz mode | 4.7 | — | µs | Time the bus must be free before a new transmission can start |
| | | | 400 kHz mode | 1.3 | — | µs | |
| SP111 | CB | Bus capacitive loading | | — | 400 | pF | |

* These parameters are characterized but not tested.

**Note 1:** As a transmitter, the device must provide this internal minimum delay time to bridge the undefined region (min. 300 ns) of the falling edge of SCL to avoid unintended generation of Start or Stop conditions.

**2:** A Fast mode (400 kHz) I²C™ bus device can be used in a Standard mode (100 kHz) I²C bus system, but the requirement TSU:DAT ≥ 250 ns must then be met. This will automatically be the case if the device does not stretch the low period of the SCL signal. If such a device does stretch the low period of the SCL signal, it must output the next data bit to the SDA line TR max. + TSU:DAT = 1000 + 250 = 1250 ns (according to the Standard mode I²C bus specification), before the SCL line is released.

chanhvinh.com



**NOTES:**

chanhvinh.com

 © 2013 Microchip Technology Inc.

chanhvinh.com



## 33.0 DC AND AC CHARACTERISTICS GRAPHS AND CHARTS

The graphs and tables provided in this section are for **design guidance** and are **not tested**.

In some graphs or tables, the data presented are **outside specified operating range** (i.e., outside specified $V_{DD}$ range). This is for **information only** and devices are ensured to operate properly only within the specified range.

Unless otherwise noted, all graphs apply to both the L and LF devices.

| | |
|---|---|
| **Note:** | The graphs and tables provided following this note are a statistical summary based on a limited number of samples and are provided for informational purposes only. The performance characteristics listed herein are not tested or guaranteed. In some graphs or tables, the data presented may be outside the specified operating range (e.g., outside specified power supply range) and therefore, outside the warranted range. |

**"Typical" represents the mean of the distribution at 25°C. "MAXIMUM", "Max.", "MINIMUM" or "Min." represents (mean + 3σ) or (mean - 3σ) respectively, where σ is a standard deviation, over each temperature range.**

chanhvinh.com



**FIGURE 33-1: $V_{OH}$ vs. $I_{OH}$ OVER TEMPERATURE, $V_{DD}$ = 5.5V, PIC16F1704/8 ONLY**

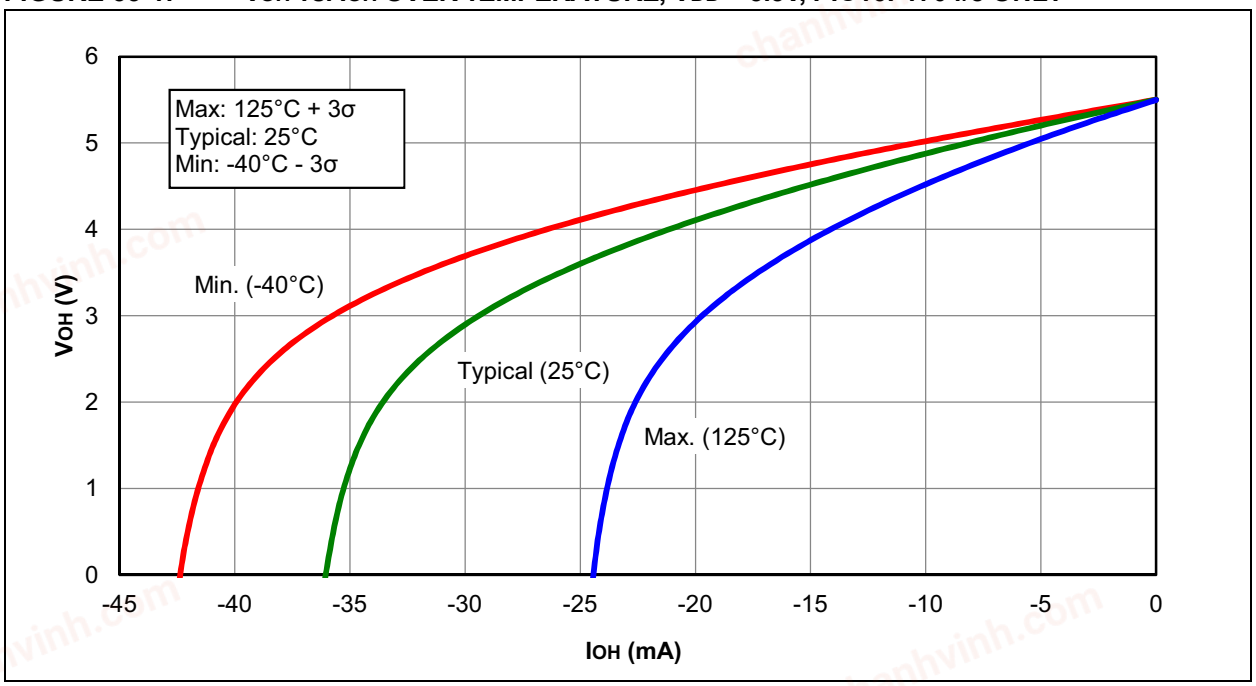


**FIGURE 33-2: $V_{OL}$ vs. $I_{OL}$ OVER TEMPERATURE, $V_{DD}$ = 5.5V, PIC16F1704/8 ONLY**

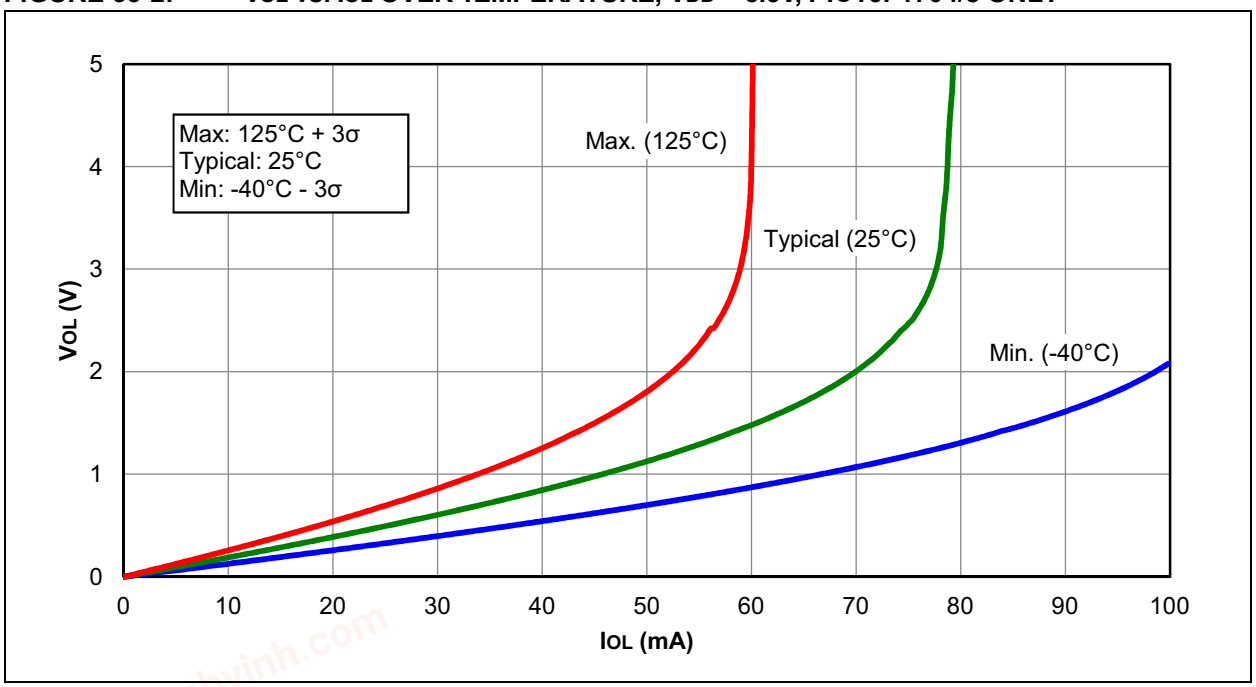


 © 2013 Microchip Technology Inc.

chanhvinh.com



**FIGURE 33-3: VOH vs. IOH OVER TEMPERATURE, VDD = 3.0V**

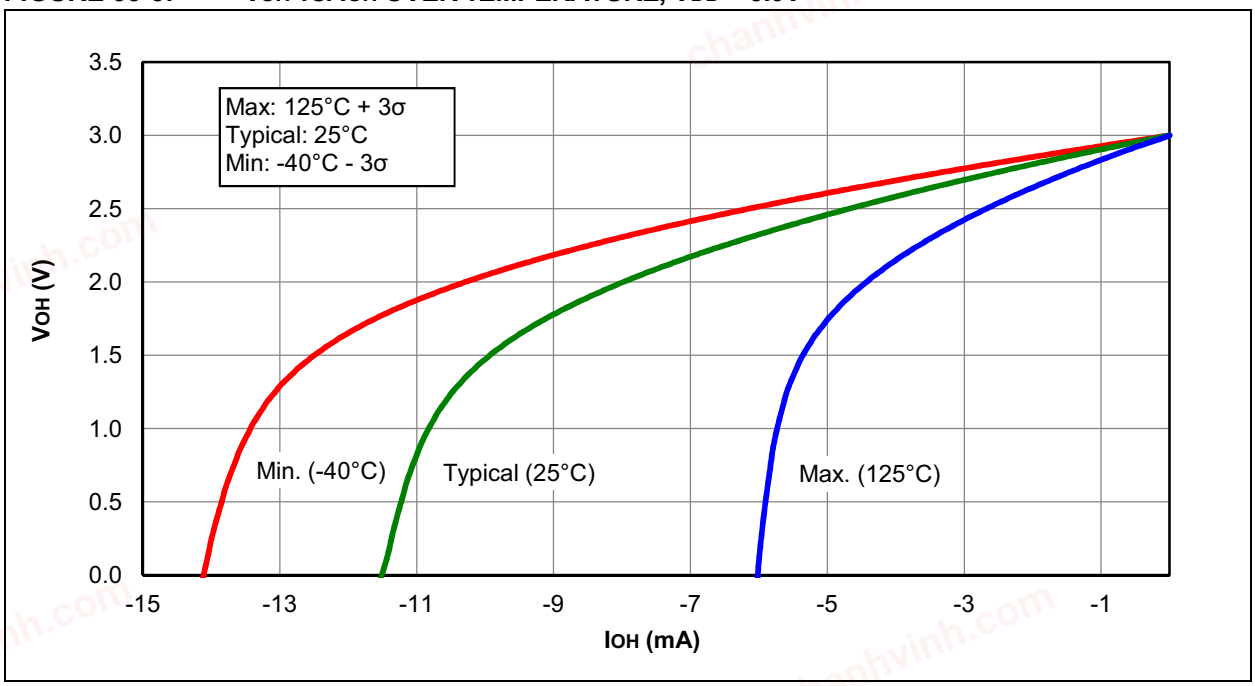


**FIGURE 33-4: VOL vs. IOL OVER TEMPERATURE, VDD = 3.0V**

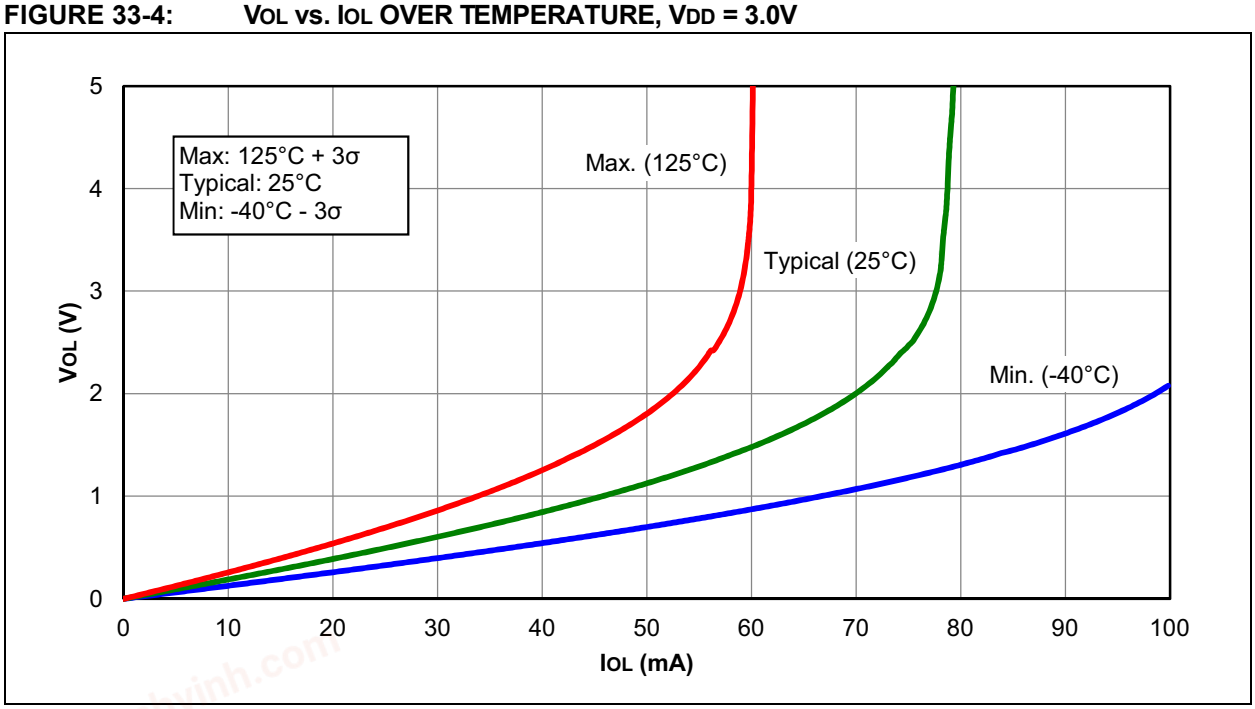

chanhvinh.com



**FIGURE 33-5: $V_{OH}$ vs. $I_{OH}$ OVER TEMPERATURE, $V_{DD}$ = 1.8V, PIC16LF1704/8 ONLY**

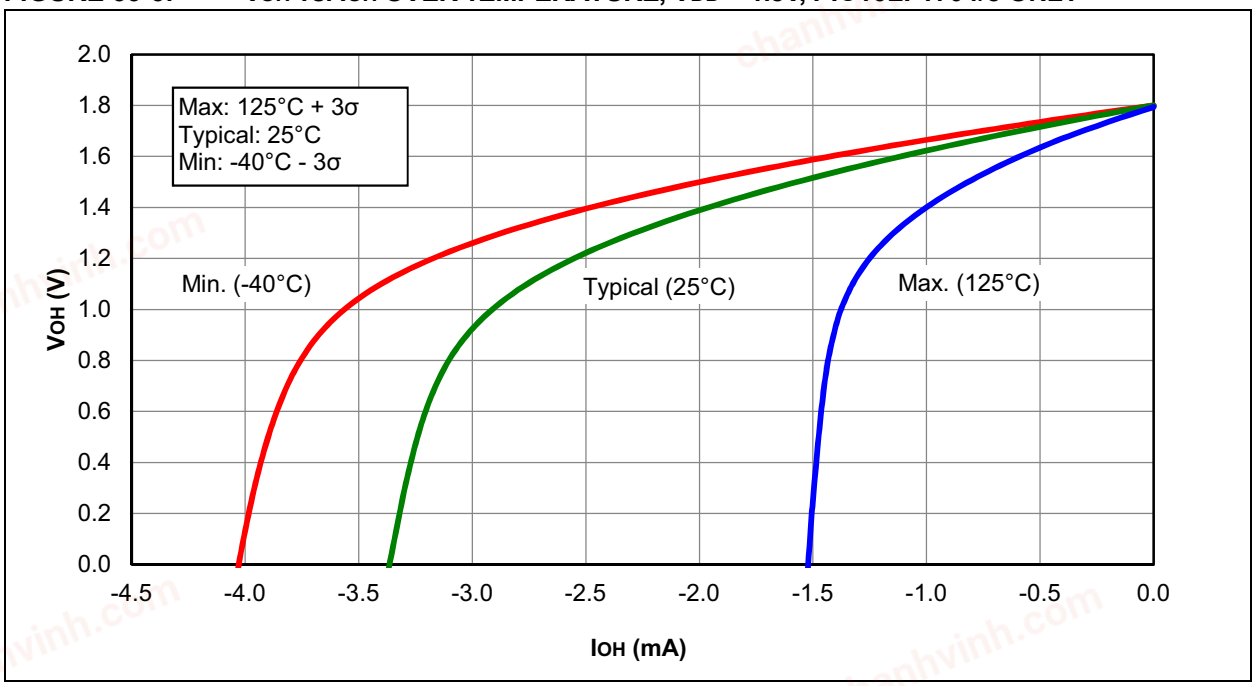


**FIGURE 33-6: $V_{OL}$ vs. $I_{OL}$ OVER TEMPERATURE, $V_{DD}$ = 1.8V, PIC16LF1704/8 ONLY**

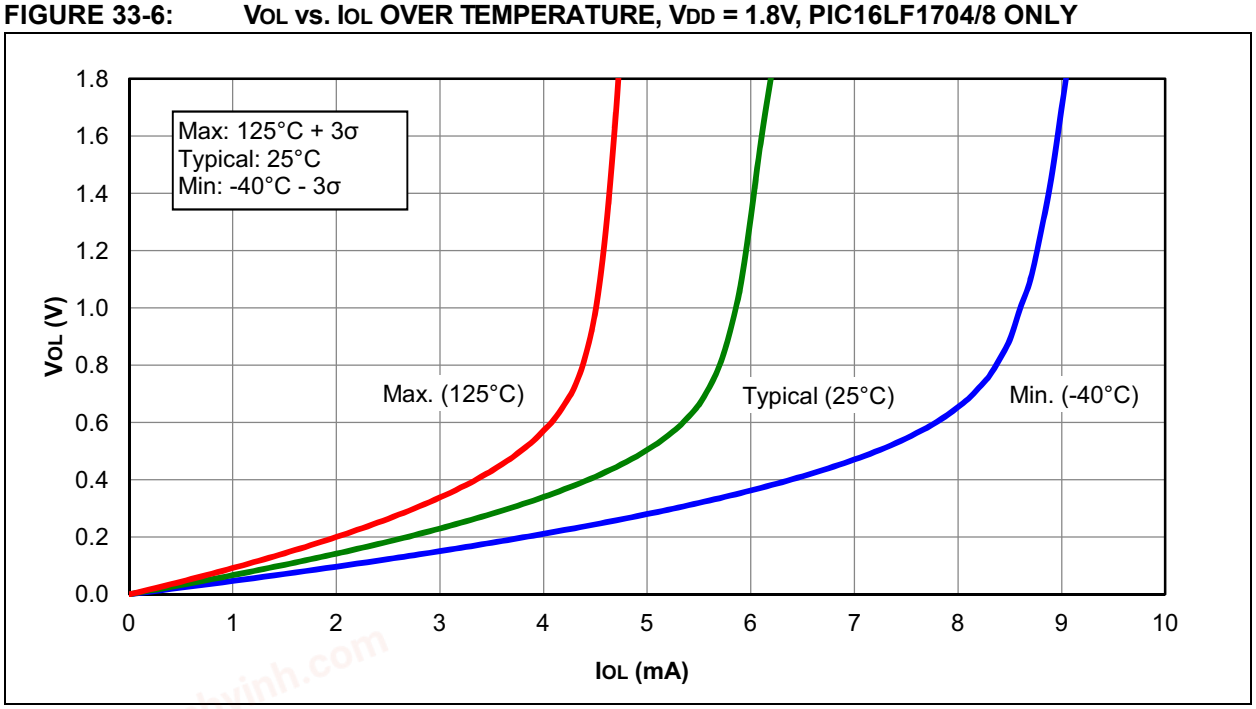


 © 2013 Microchip Technology Inc.

chanhvinh.com



**FIGURE 33-7: POR RELEASE VOLTAGE**

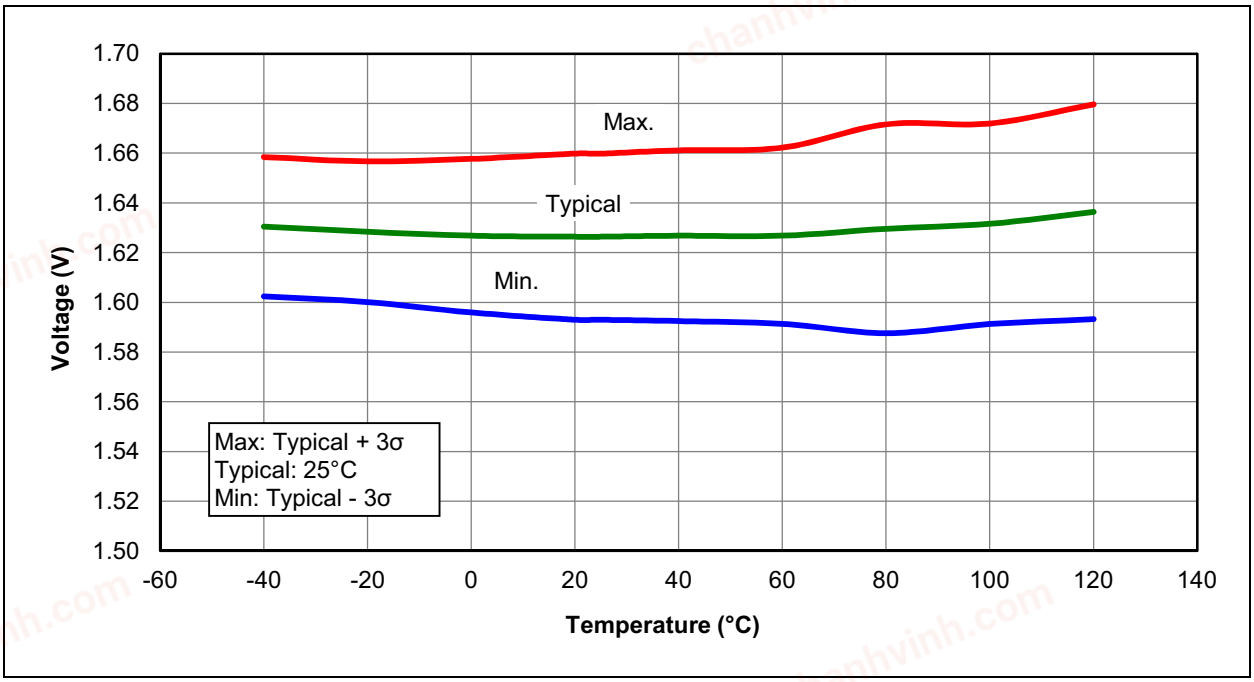


**FIGURE 33-8: POR REARM VOLTAGE, PIC16F1704/8 ONLY**

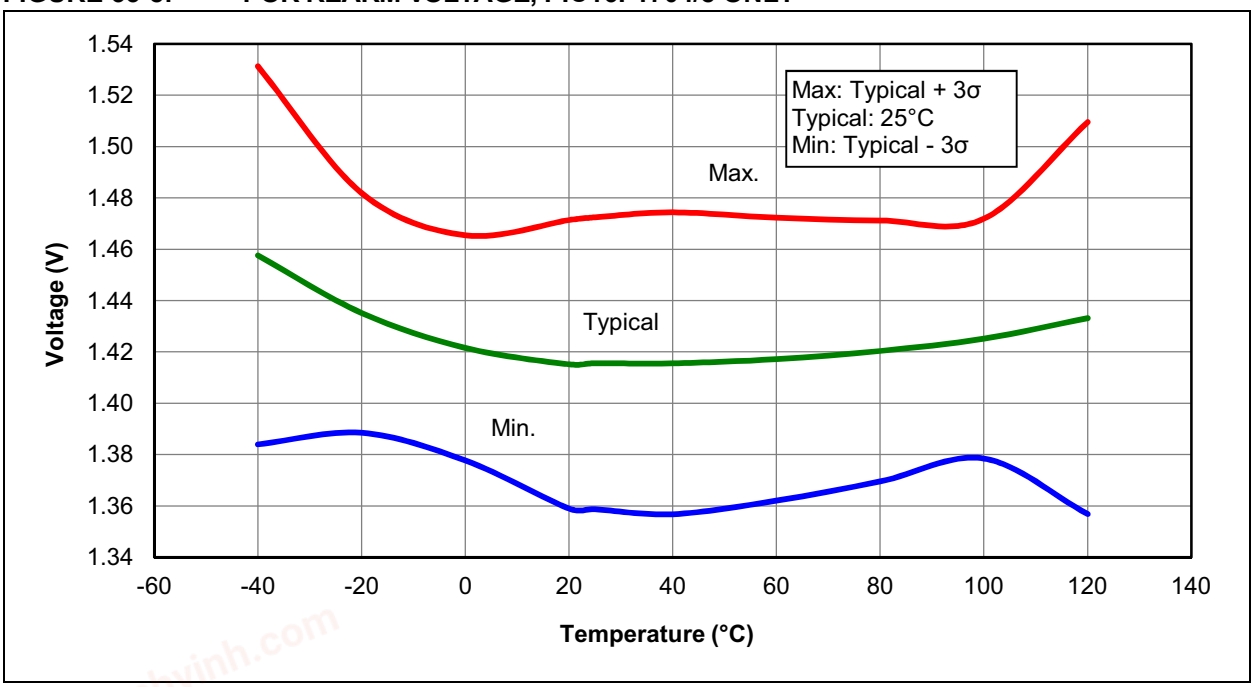

chanhvinh.com



**FIGURE 33-9: BROWN-OUT RESET VOLTAGE, BORV = 1, PIC16LF1704/8 ONLY**

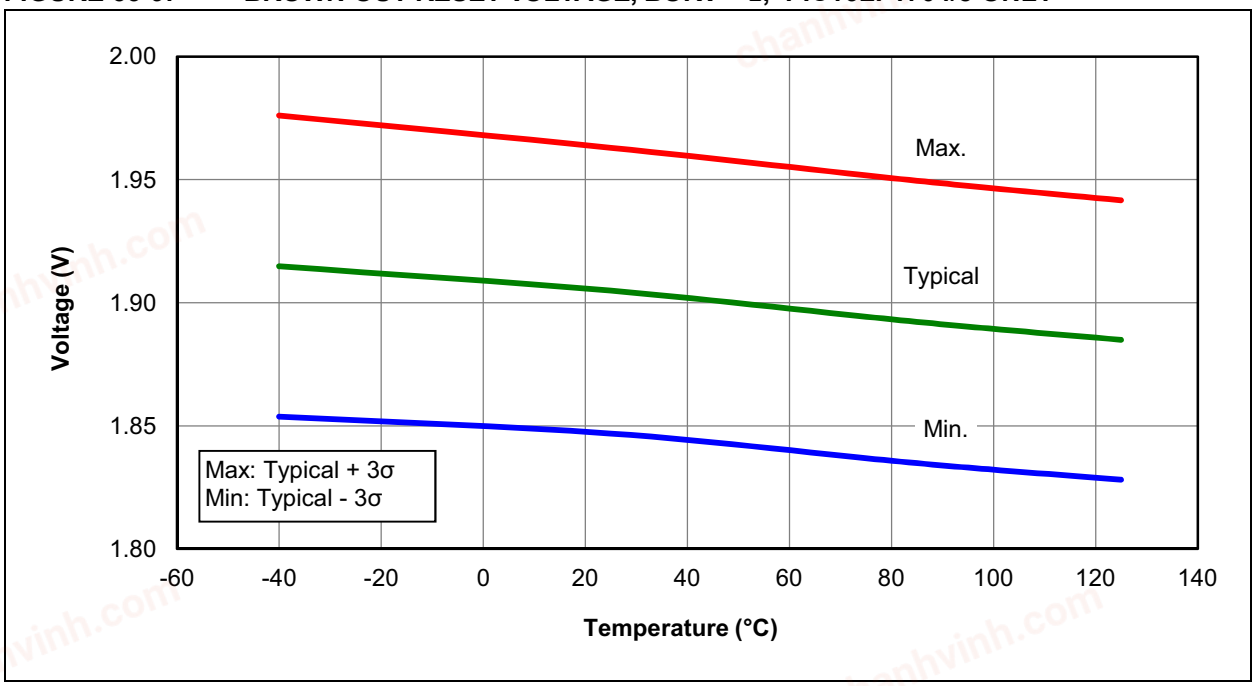


**FIGURE 33-10: BROWN-OUT RESET HYSTERESIS, BORV = 1, PIC16LF1704/8 ONLY**

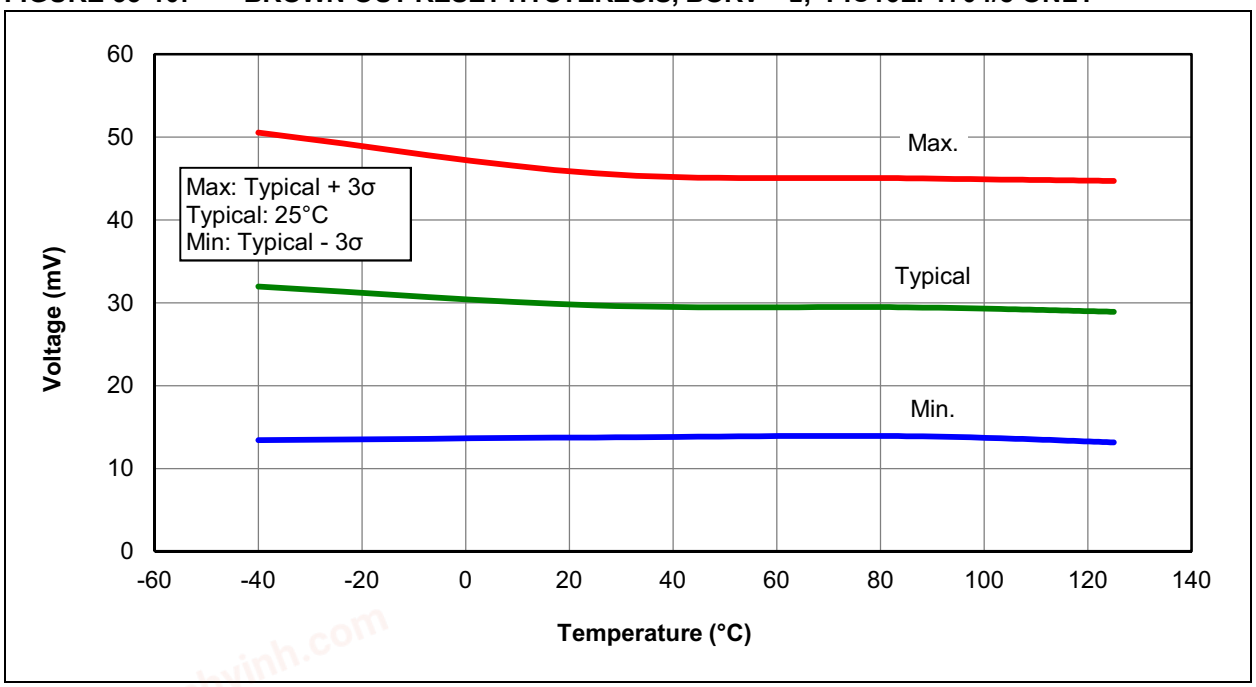


 © 2013 Microchip Technology Inc.

chanhvinh.com



**FIGURE 33-11: BROWN-OUT RESET VOLTAGE, BORV = 1, PIC16F1704/8 ONLY**

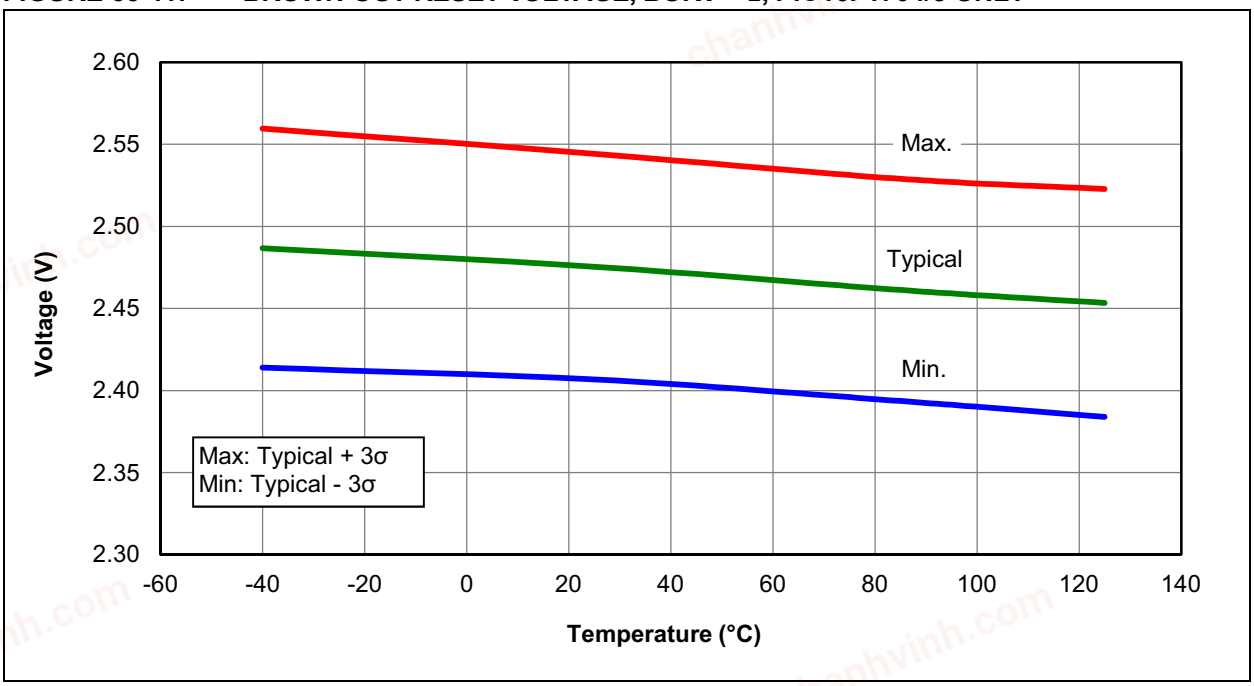


**FIGURE 33-12: BROWN-OUT RESET HYSTERESIS, BORV = 1, PIC16F1704/8 ONLY**

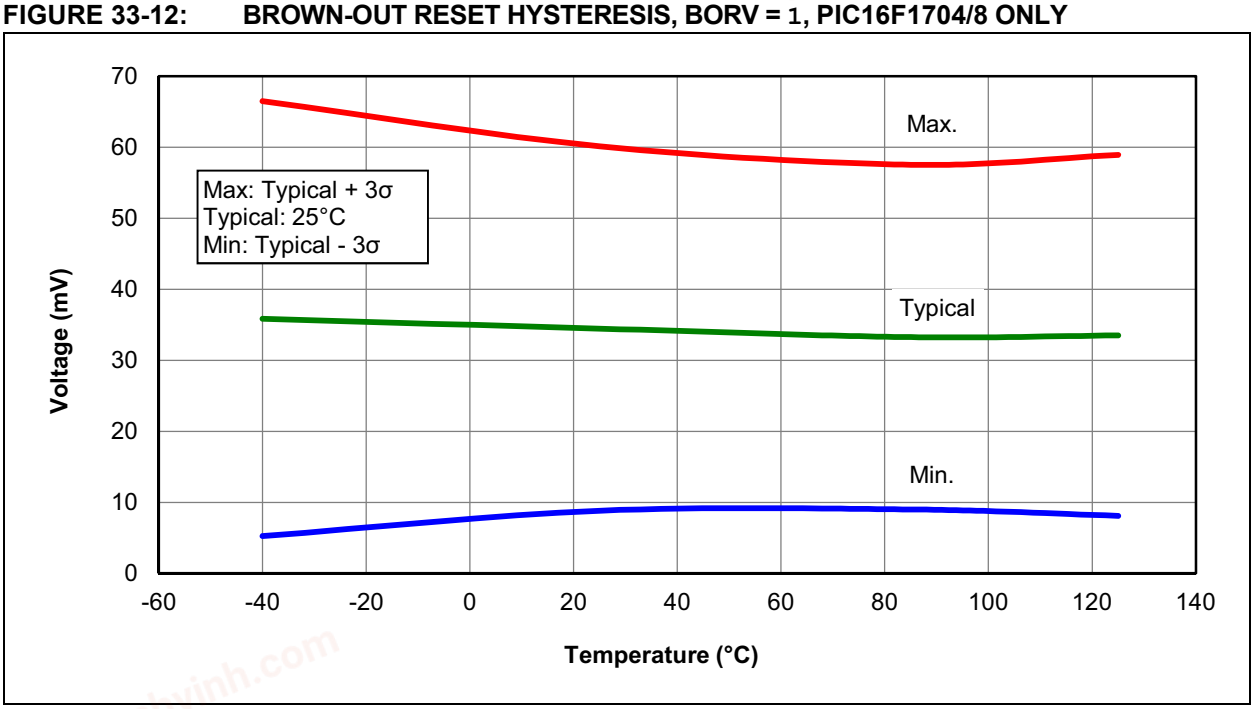

chanhvinh.com



**FIGURE 33-13: BROWN-OUT RESET VOLTAGE, BORV = 0**

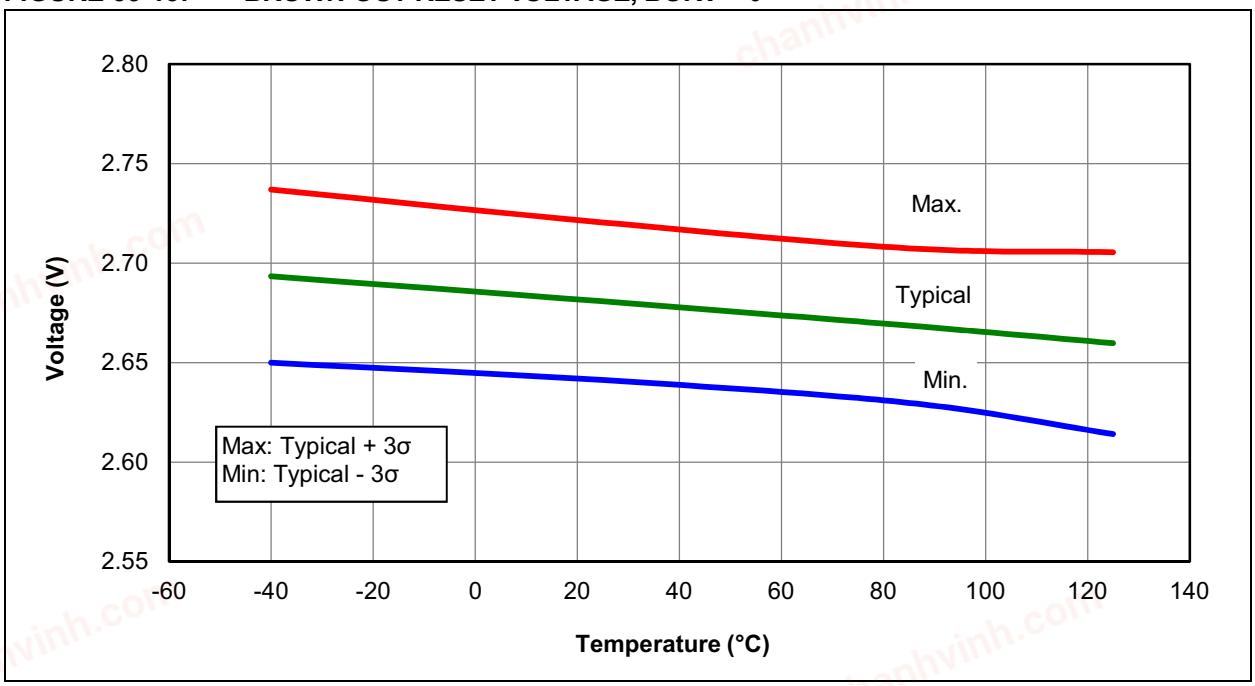


**FIGURE 33-14: BROWN-OUT RESET HYSTERESIS, BORV = 0**

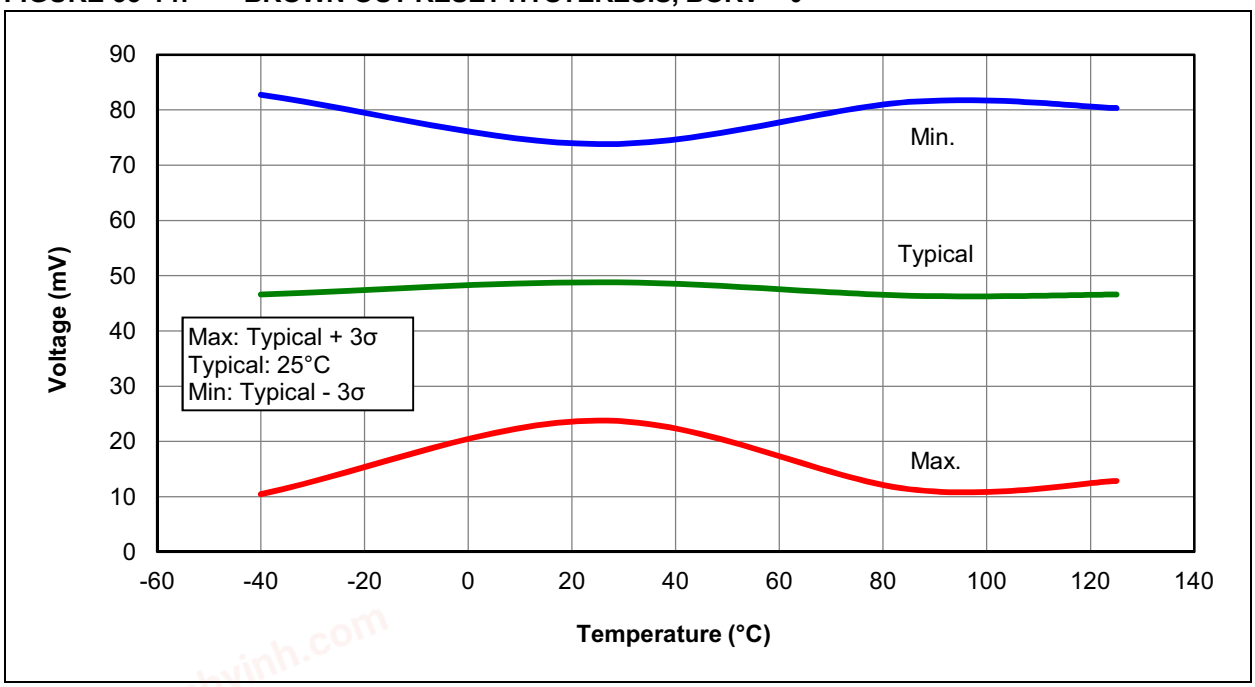


 © 2013 Microchip Technology Inc.

chanhvinh.com



**FIGURE 33-15: LOW-POWER BROWN-OUT RESET VOLTAGE, LPBOR = 0**

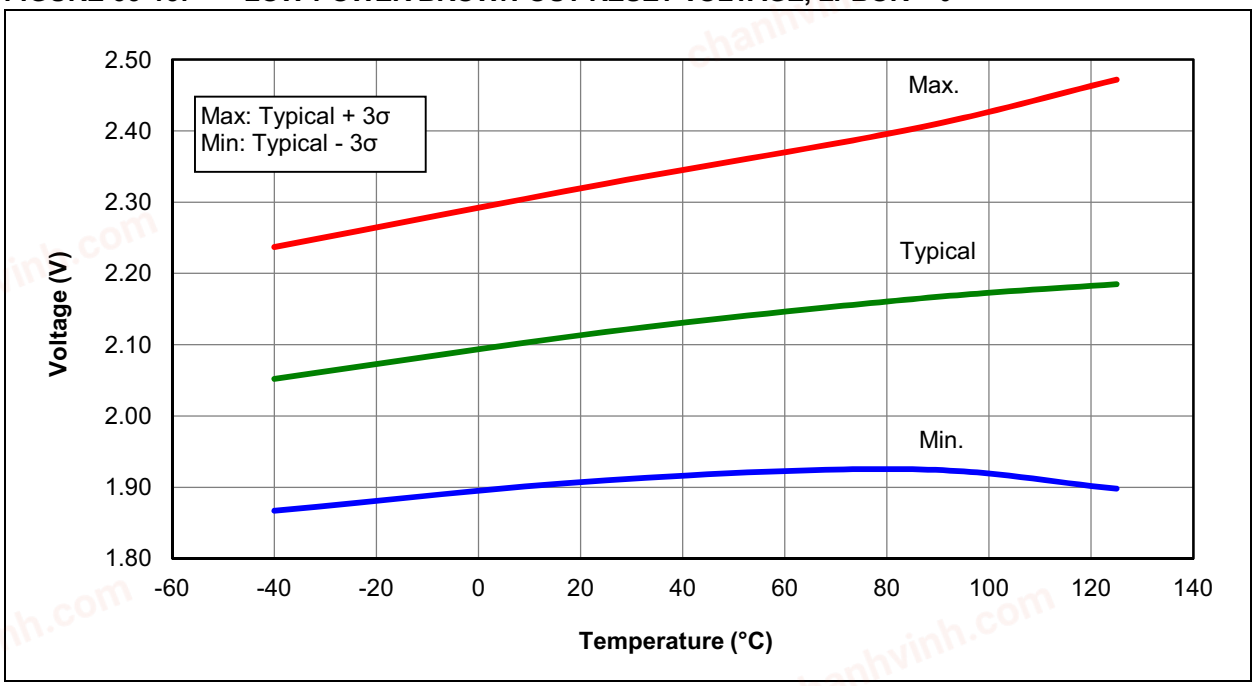


**FIGURE 33-16: LOW-POWER BROWN-OUT RESET HYSTERESIS, LPBOR = 0**

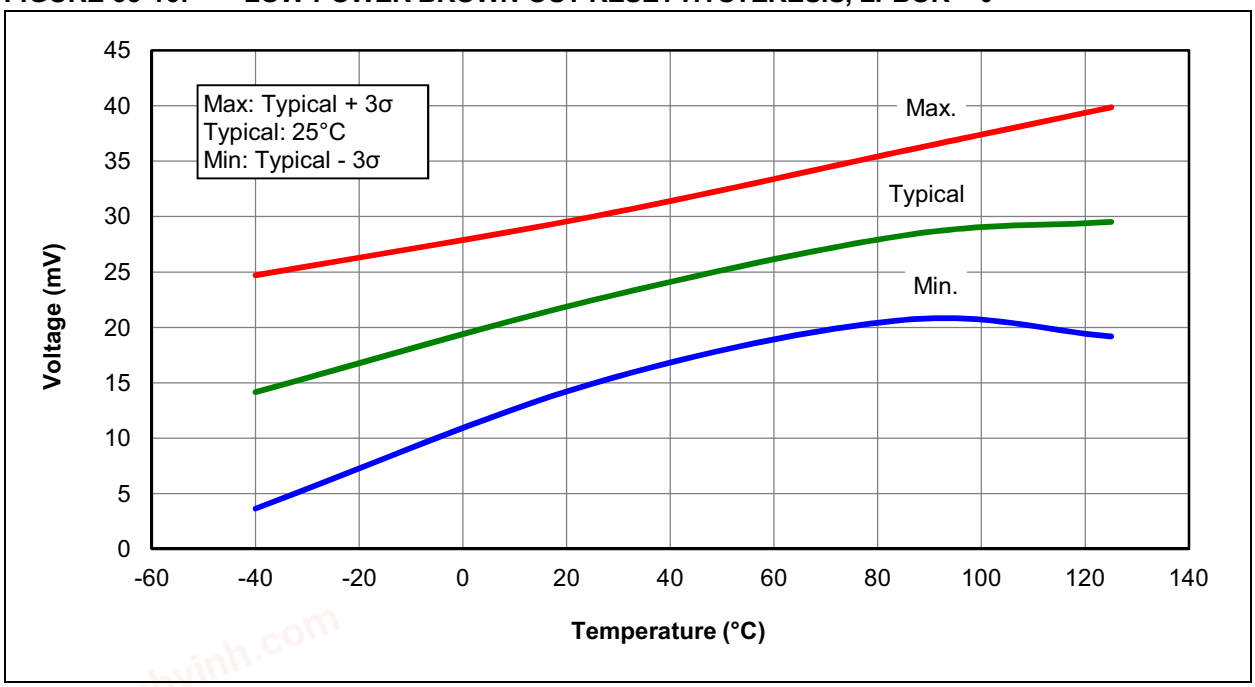

chanhvinh.com



**FIGURE 33-17: WDT TIME-OUT PERIOD**

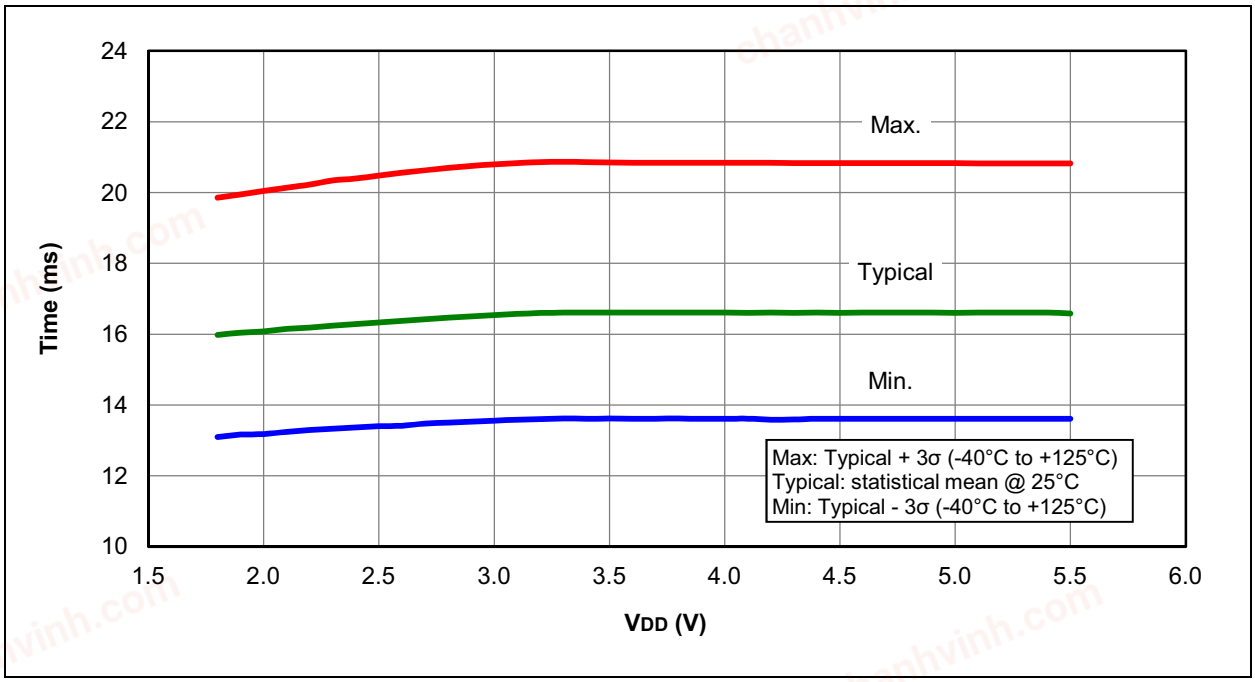


**FIGURE 33-18: PWRT PERIOD**

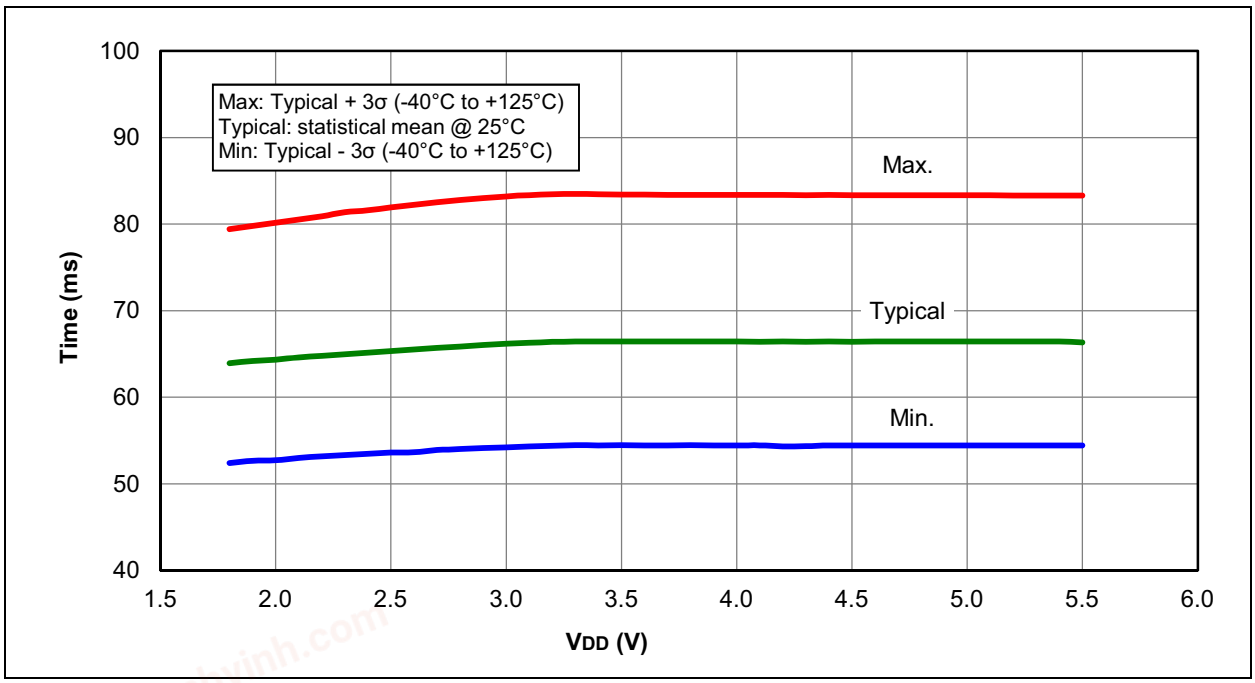


 © 2013 Microchip Technology Inc.

chanhvinh.com



**FIGURE 33-19: FVR STABILIZATION PERIOD**

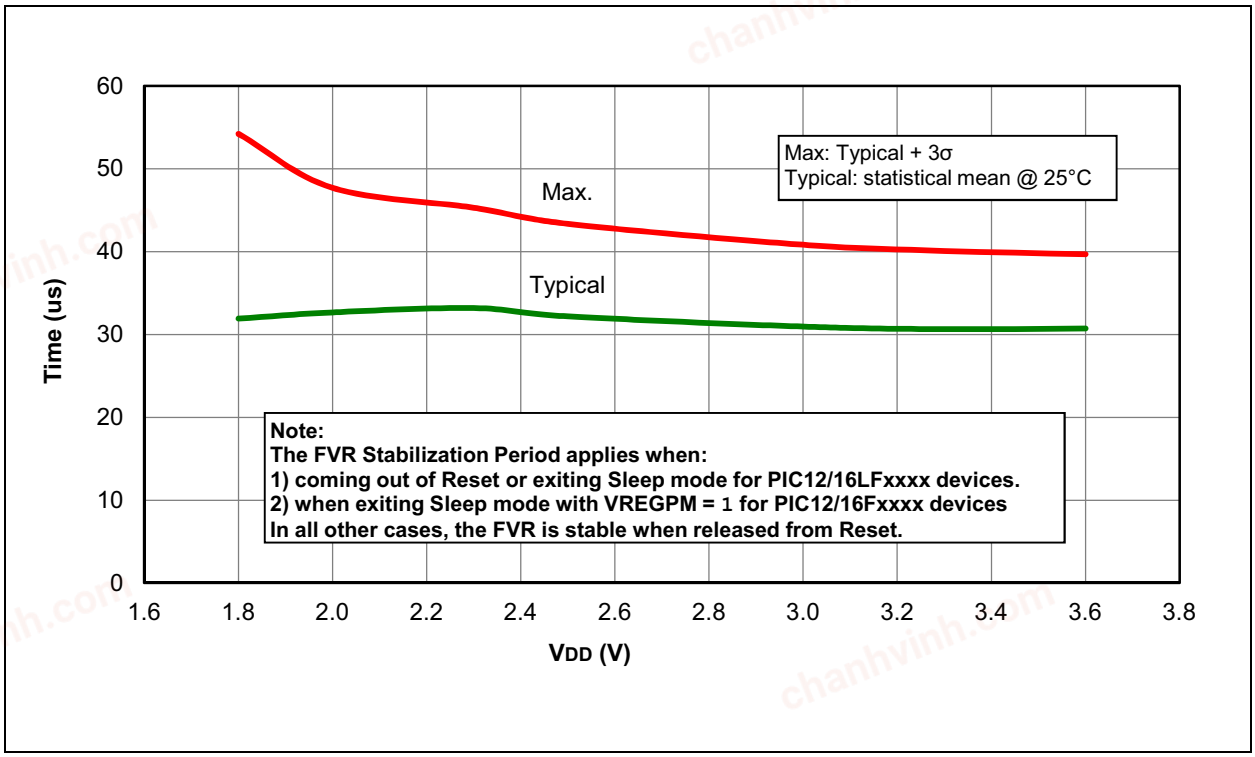

chanhvinh.com



**FIGURE 33-20: LFINTOSC FREQUENCY OVER VDD AND TEMPERATURE, PIC16LF1704/8 ONLY**

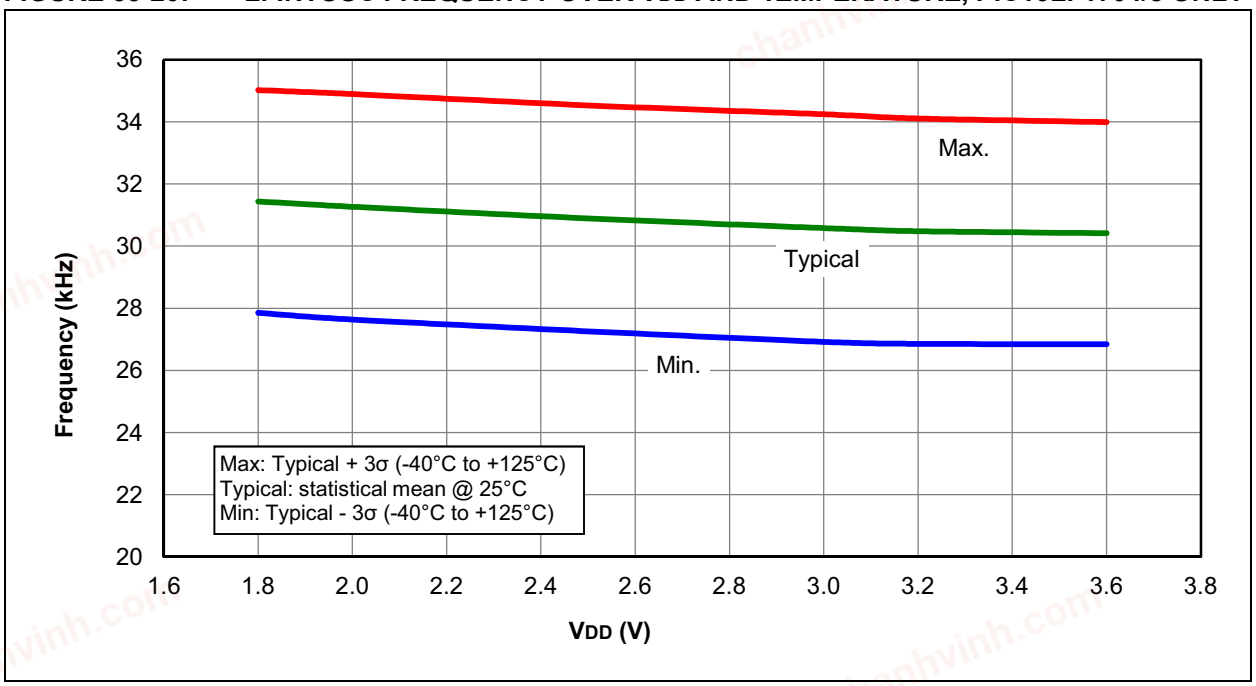


**FIGURE 33-21: LFINTOSC FREQUENCY OVER VDD AND TEMPERATURE, PIC16F1704/8 ONLY**

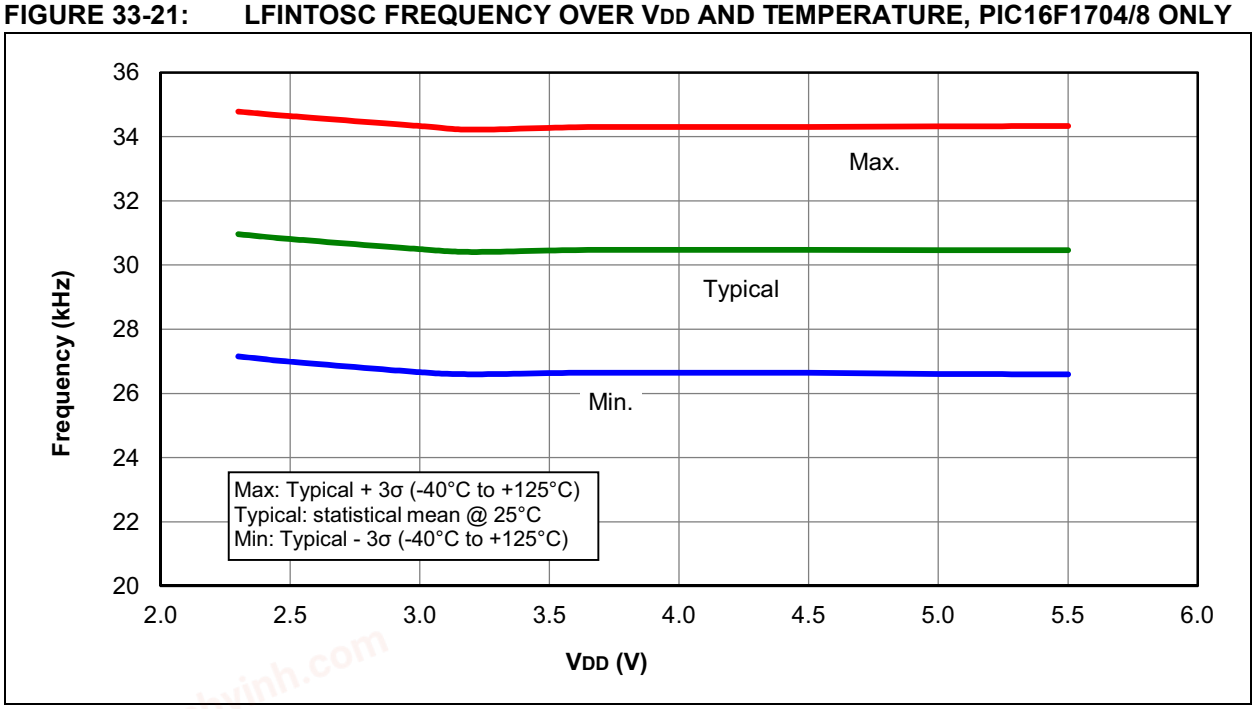


 © 2013 Microchip Technology Inc.

chanhvinh.com



**FIGURE 33-22: HFINTOSC ACCURACY OVER TEMPERATURE, VDD = 1.8V, PIC16LF1704/8 ONLY**

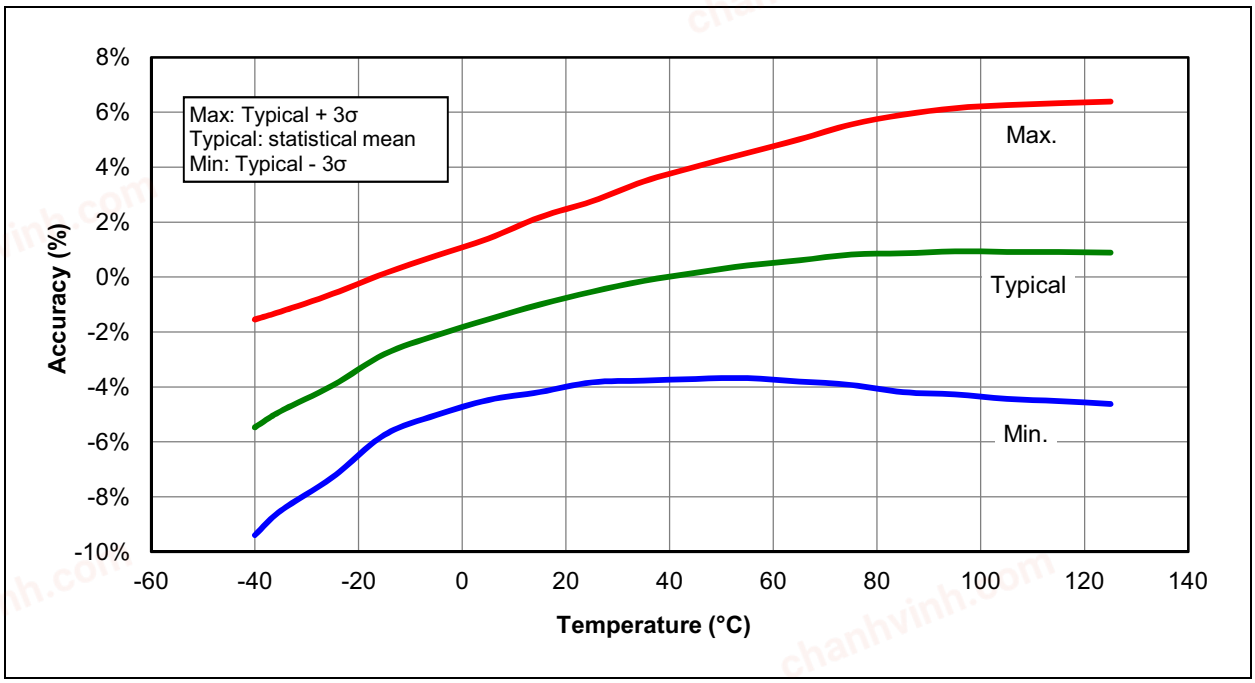


**FIGURE 33-23: HFINTOSC ACCURACY OVER TEMPERATURE, 2.3V ≤ VDD ≤ 5.5V**

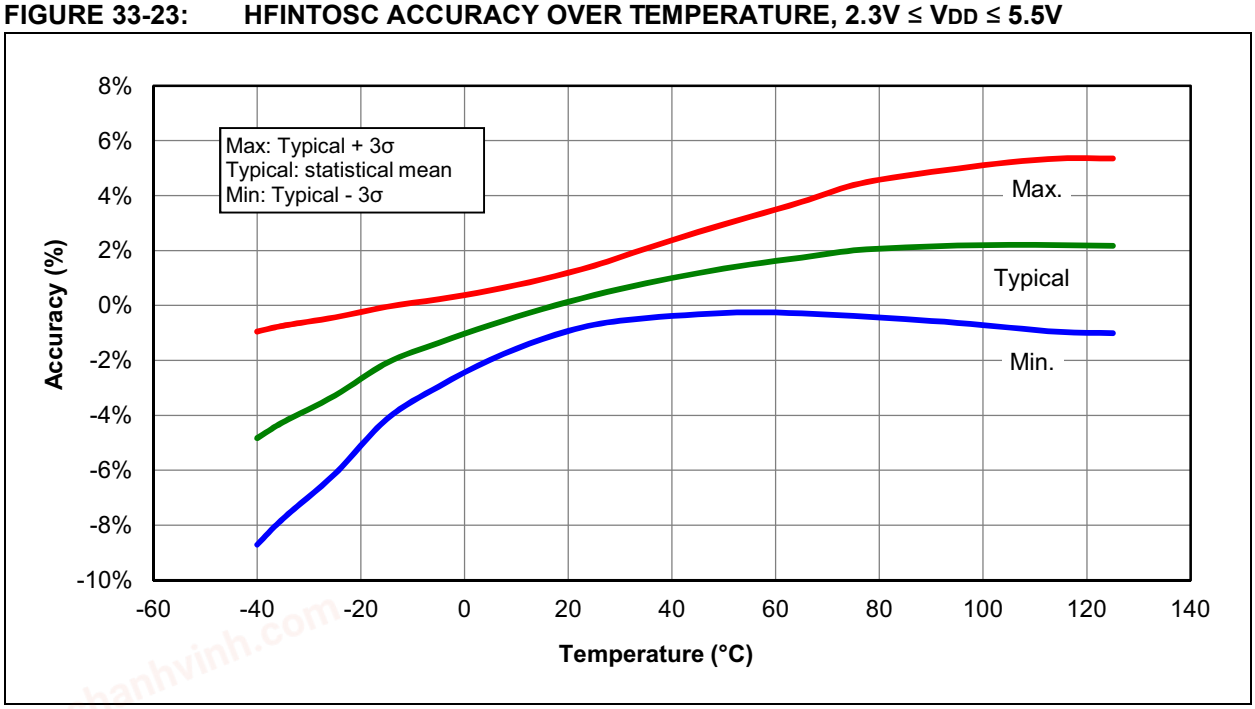

chanhvinh.com



**FIGURE 33-24: SLEEP MODE, WAKE PERIOD WITH HFINTOSC SOURCE, PIC16LF1704/8 ONLY**

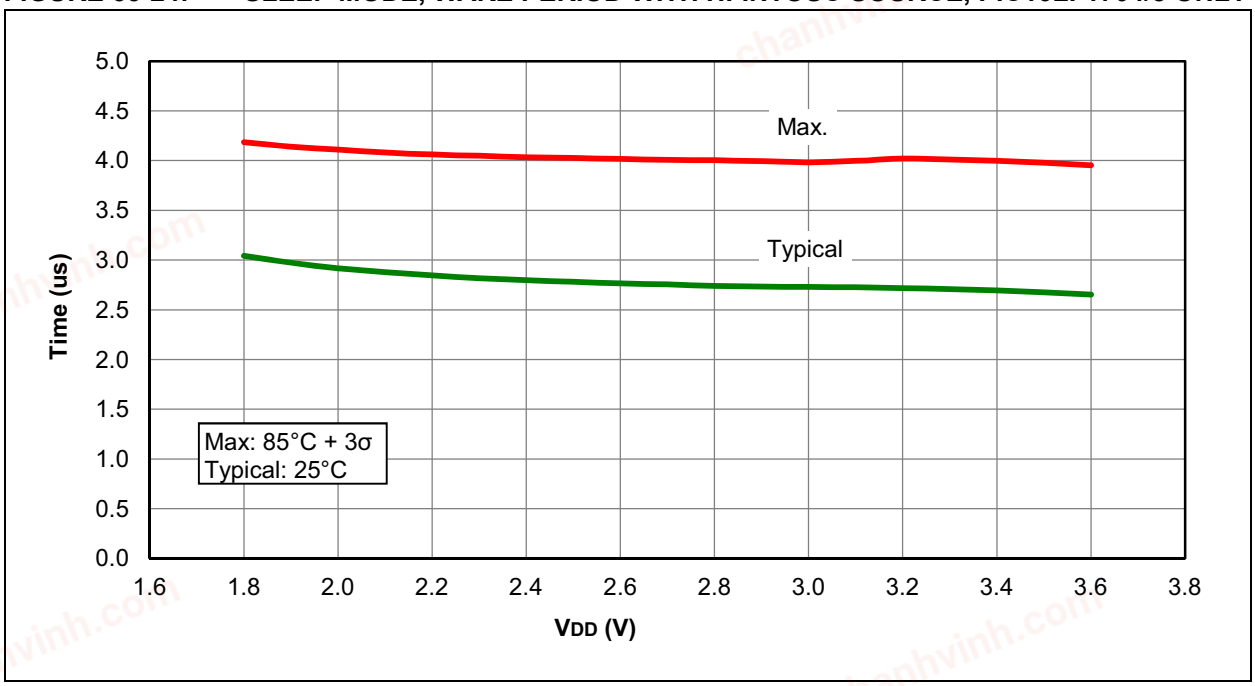


 © 2013 Microchip Technology Inc.

chanhvinh.com



**FIGURE 33-25: LOW-POWER SLEEP MODE, WAKE PERIOD WITH HFINTOSC SOURCE, VREGPM = 1, PIC16F1704/8 ONLY**

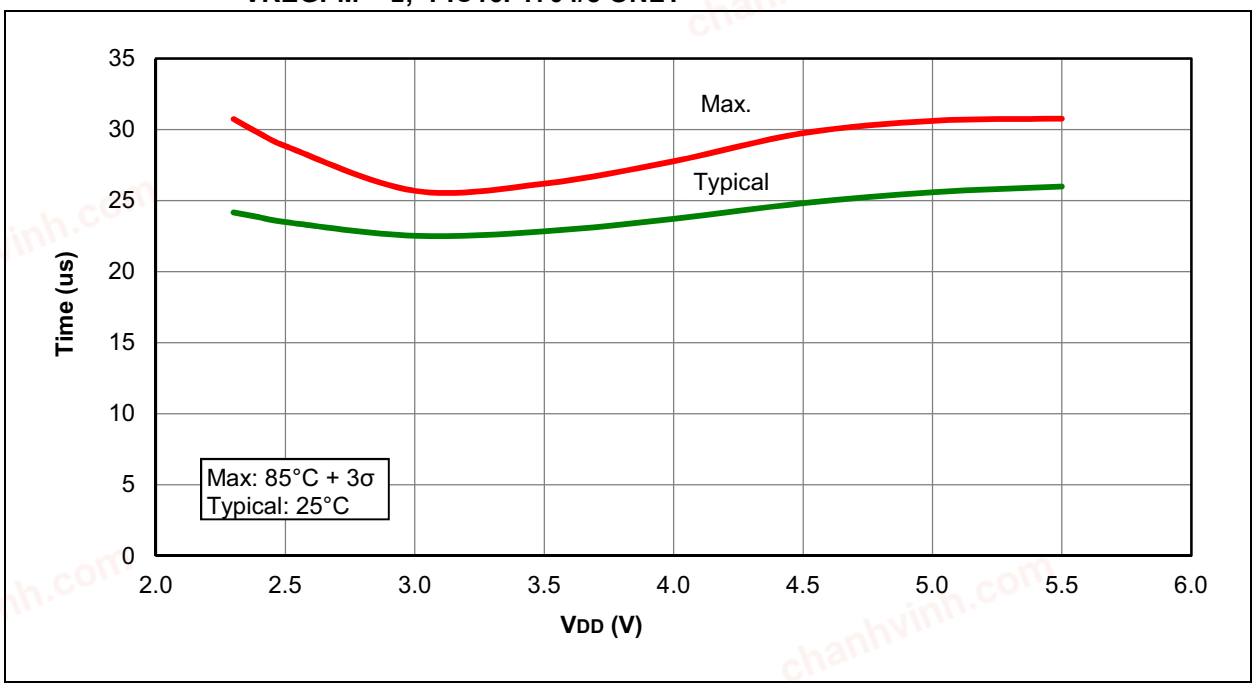


**FIGURE 33-26: SLEEP MODE, WAKE PERIOD WITH HFINTOSC SOURCE, VREGPM = 0, PIC16F1704/8 ONLY**

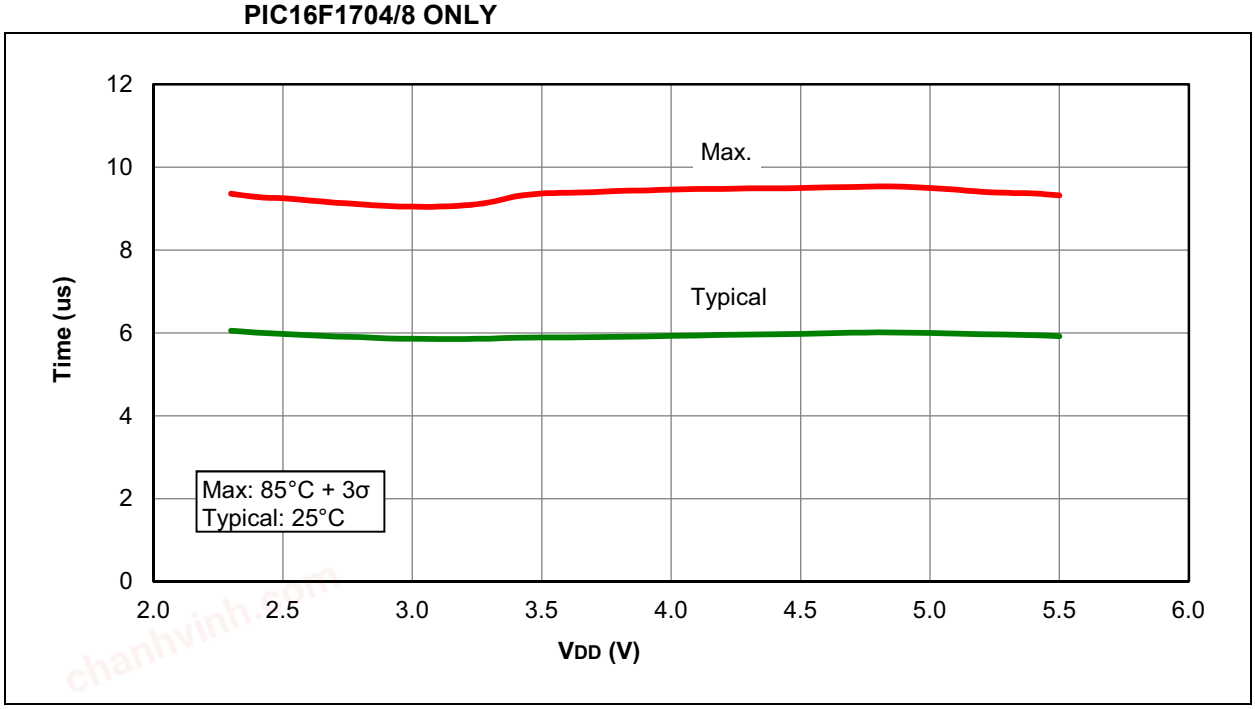

chanhvinh.com



**NOTES:**

chanhvinh.com

 © 2013 Microchip Technology Inc.

chanhvinh.com



## 34.0 DEVELOPMENT SUPPORT

The PIC® microcontrollers (MCU) and dsPIC® digital signal controllers (DSC) are supported with a full range of software and hardware development tools:

- Integrated Development Environment
  - MPLAB® X IDE Software
- Compilers/Assemblers/Linkers
  - MPLAB XC Compiler
  - MPASM™ Assembler
  - MPLINK™ Object Linker/ MPLIB™ Object Librarian
  - MPLAB Assembler/Linker/Librarian for Various Device Families
- Simulators
  - MPLAB X SIM Software Simulator
- Emulators
  - MPLAB REAL ICE™ In-Circuit Emulator
- In-Circuit Debuggers/Programmers
  - MPLAB ICD 3
  - PICkit™ 3
- Device Programmers
  - MPLAB PM3 Device Programmer
- Low-Cost Demonstration/Development Boards, Evaluation Kits and Starter Kits
- Third-party development tools

### 34.1 MPLAB X Integrated Development Environment Software

The MPLAB X IDE is a single, unified graphical user interface for Microchip and third-party software, and hardware development tool that runs on Windows®, Linux and Mac OS® X. Based on the NetBeans IDE, MPLAB X IDE is an entirely new IDE with a host of free software components and plug-ins for high-performance application development and debugging. Moving between tools and upgrading from software simulators to hardware debugging and programming tools is simple with the seamless user interface.

With complete project management, visual call graphs, a configurable watch window and a feature-rich editor that includes code completion and context menus, MPLAB X IDE is flexible and friendly enough for new users. With the ability to support multiple tools on multiple projects with simultaneous debugging, MPLAB X IDE is also suitable for the needs of experienced users.

Feature-Rich Editor:

- Color syntax highlighting
- Smart code completion makes suggestions and provides hints as you type
- Automatic code formatting based on user-defined rules
- Live parsing

User-Friendly, Customizable Interface:

- Fully customizable interface: toolbars, toolbar buttons, windows, window placement, etc.
- Call graph window

Project-Based Workspaces:

- Multiple projects
- Multiple tools
- Multiple configurations
- Simultaneous debugging sessions

File History and Bug Tracking:

- Local file history feature
- Built-in support for Bugzilla issue tracker

chanhvinh.com



## 34.2 MPLAB XC Compilers

The MPLAB XC Compilers are complete ANSI C compilers for all of Microchip's 8, 16, and 32-bit MCU and DSC devices. These compilers provide powerful integration capabilities, superior code optimization and ease of use. MPLAB XC Compilers run on Windows, Linux or MAC OS X.

For easy source level debugging, the compilers provide debug information that is optimized to the MPLAB X IDE.

The free MPLAB XC Compiler editions support all devices and commands, with no time or memory restrictions, and offer sufficient code optimization for most applications.

MPLAB XC Compilers include an assembler, linker and utilities. The assembler generates relocatable object files that can then be archived or linked with other relocatable object files and archives to create an executable file. MPLAB XC Compiler uses the assembler to produce its object file. Notable features of the assembler include:

- Support for the entire device instruction set
- Support for fixed-point and floating-point data
- Command-line interface
- Rich directive set
- Flexible macro language
- MPLAB X IDE compatibility

## 34.3 MPASM Assembler

The MPASM Assembler is a full-featured, universal macro assembler for PIC10/12/16/18 MCUs.

The MPASM Assembler generates relocatable object files for the MPLINK Object Linker, Intel® standard HEX files, MAP files to detail memory usage and symbol reference, absolute LST files that contain source lines and generated machine code, and COFF files for debugging.

The MPASM Assembler features include:

- Integration into MPLAB X IDE projects
- User-defined macros to streamline assembly code
- Conditional assembly for multipurpose source files
- Directives that allow complete control over the assembly process

## 34.4 MPLINK Object Linker/ MPLIB Object Librarian

The MPLINK Object Linker combines relocatable objects created by the MPASM Assembler. It can link relocatable objects from precompiled libraries, using directives from a linker script.

The MPLIB Object Librarian manages the creation and modification of library files of precompiled code. When a routine from a library is called from a source file, only the modules that contain that routine will be linked in with the application. This allows large libraries to be used efficiently in many different applications.

The object linker/library features include:

- Efficient linking of single libraries instead of many smaller files
- Enhanced code maintainability by grouping related modules together
- Flexible creation of libraries with easy module listing, replacement, deletion and extraction

## 34.5 MPLAB Assembler, Linker and Librarian for Various Device Families

MPLAB Assembler produces relocatable machine code from symbolic assembly language for PIC24, PIC32 and dsPIC DSC devices. MPLAB XC Compiler uses the assembler to produce its object file. The assembler generates relocatable object files that can then be archived or linked with other relocatable object files and archives to create an executable file. Notable features of the assembler include:

- Support for the entire device instruction set
- Support for fixed-point and floating-point data
- Command-line interface
- Rich directive set
- Flexible macro language
- MPLAB X IDE compatibility

 © 2013 Microchip Technology Inc.

chanhvinh.com



## 34.6 MPLAB X SIM Software Simulator

The MPLAB X SIM Software Simulator allows code development in a PC-hosted environment by simulating the PIC MCUs and dsPIC DSCs on an instruction level. On any given instruction, the data areas can be examined or modified and stimuli can be applied from a comprehensive stimulus controller. Registers can be logged to files for further run-time analysis. The trace buffer and logic analyzer display extend the power of the simulator to record and track program execution, actions on I/O, most peripherals and internal registers.

The MPLAB X SIM Software Simulator fully supports symbolic debugging using the MPLAB XC Compilers, and the MPASM and MPLAB Assemblers. The software simulator offers the flexibility to develop and debug code outside of the hardware laboratory environment, making it an excellent, economical software development tool.

## 34.7 MPLAB REAL ICE In-Circuit Emulator System

The MPLAB REAL ICE In-Circuit Emulator System is Microchip's next generation high-speed emulator for Microchip Flash DSC and MCU devices. It debugs and programs all 8, 16 and 32-bit MCU, and DSC devices with the easy-to-use, powerful graphical user interface of the MPLAB X IDE.

The emulator is connected to the design engineer's PC using a high-speed USB 2.0 interface and is connected to the target with either a connector compatible with in-circuit debugger systems (RJ-11) or with the new high-speed, noise tolerant, Low-Voltage Differential Signal (LVDS) interconnection (CAT5).

The emulator is field upgradeable through future firmware downloads in MPLAB X IDE. MPLAB REAL ICE offers significant advantages over competitive emulators including full-speed emulation, run-time variable watches, trace analysis, complex breakpoints, logic probes, a ruggedized probe interface and long (up to three meters) interconnection cables.

## 34.8 MPLAB ICD 3 In-Circuit Debugger System

The MPLAB ICD 3 In-Circuit Debugger System is Microchip's most cost-effective, high-speed hardware debugger/programmer for Microchip Flash DSC and MCU devices. It debugs and programs PIC Flash microcontrollers and dsPIC DSCs with the powerful, yet easy-to-use graphical user interface of the MPLAB IDE.

The MPLAB ICD 3 In-Circuit Debugger probe is connected to the design engineer's PC using a high-speed USB 2.0 interface and is connected to the target with a connector compatible with the MPLAB ICD 2 or MPLAB REAL ICE systems (RJ-11). MPLAB ICD 3 supports all MPLAB ICD 2 headers.

## 34.9 PICkit 3 In-Circuit Debugger/ Programmer

The MPLAB PICkit 3 allows debugging and programming of PIC and dsPIC Flash microcontrollers at a most affordable price point using the powerful graphical user interface of the MPLAB IDE. The MPLAB PICkit 3 is connected to the design engineer's PC using a full-speed USB interface and can be connected to the target via a Microchip debug (RJ-11) connector (compatible with MPLAB ICD 3 and MPLAB REAL ICE). The connector uses two device I/O pins and the Reset line to implement in-circuit debugging and In-Circuit Serial Programming™ (ICSP™).

## 34.10 MPLAB PM3 Device Programmer

The MPLAB PM3 Device Programmer is a universal, CE compliant device programmer with programmable voltage verification at $V_{DDMIN}$ and $V_{DDMAX}$ for maximum reliability. It features a large LCD display (128 x 64) for menus and error messages, and a modular, detachable socket assembly to support various package types. The ICSP cable assembly is included as a standard item. In Stand-Alone mode, the MPLAB PM3 Device Programmer can read, verify and program PIC devices without a PC connection. It can also set code protection in this mode. The MPLAB PM3 connects to the host PC via an RS-232 or USB cable. The MPLAB PM3 has high-speed communications and optimized algorithms for quick programming of large memory devices, and incorporates an MMC card for file storage and data applications.

chanhvinh.com



## 34.11 Demonstration/Development Boards, Evaluation Kits, and Starter Kits

A wide variety of demonstration, development and evaluation boards for various PIC MCUs and dsPIC DSCs allows quick application development on fully functional systems. Most boards include prototyping areas for adding custom circuitry and provide application firmware and source code for examination and modification.

The boards support a variety of features, including LEDs, temperature sensors, switches, speakers, RS-232 interfaces, LCD displays, potentiometers and additional EEPROM memory.

The demonstration and development boards can be used in teaching environments, for prototyping custom circuits and for learning about various microcontroller applications.

In addition to the PICDEM™ and dsPICDEM™ demonstration/development board series of circuits, Microchip has a line of evaluation kits and demonstration software for analog filter design, KEELOQ® security ICs, CAN, IrDA®, PowerSmart battery management, SEEVAL® evaluation system, Sigma-Delta ADC, flow rate sensing, plus many more.

Also available are starter kits that contain everything needed to experience the specified device. This usually includes a single application and debug capability, all on one board.

Check the Microchip web page (www.microchip.com) for the complete list of demonstration, development and evaluation kits.

## 34.12 Third-Party Development Tools

Microchip also offers a great collection of tools from third-party vendors. These tools are carefully selected to offer good value and unique functionality.

- Device Programmers and Gang Programmers from companies, such as SoftLog and CCS
- Software Tools from companies, such as Gimpel and Trace Systems
- Protocol Analyzers from companies, such as Saleae and Total Phase
- Demonstration Boards from companies, such as MikroElektronika, Digilent® and Olimex
- Embedded Ethernet Solutions from companies, such as EZ Web Lynx, WIZnet and IPLogika®

 © 2013 Microchip Technology Inc.

chanhvinh.com



## 35.0 PACKAGING INFORMATION

### 35.1 Package Marking Information

14-Lead PDIP (300 mil)

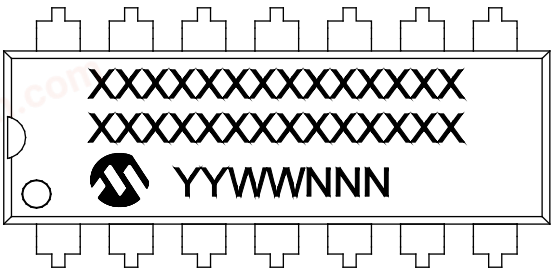


Example

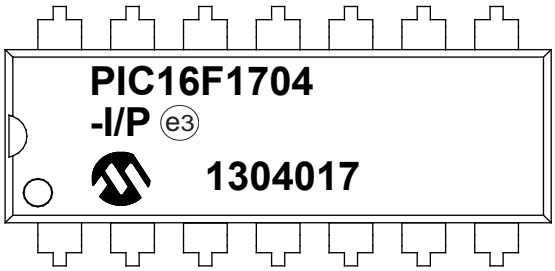


14-Lead SOIC (3.90 mm)

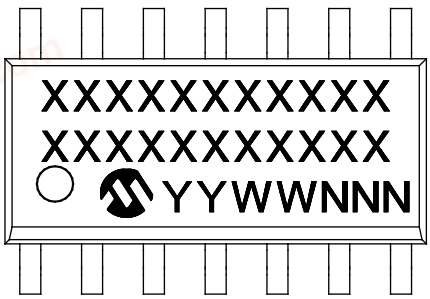


Example

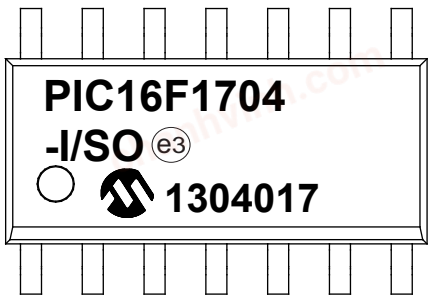


14-Lead TSSOP (4.4 mm)

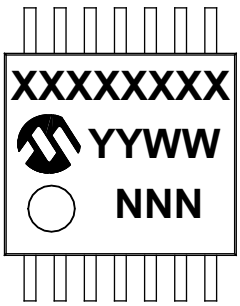


Example

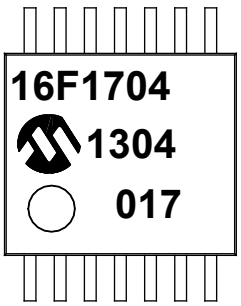


| | | |
|---|---|---|
| **Legend:** | XX...X | Customer-specific information |
| | Y | Year code (last digit of calendar year) |
| | YY | Year code (last 2 digits of calendar year) |
| | WW | Week code (week of January 1 is week ‘01’) |
| | NNN | Alphanumeric traceability code |
| | (e3) | Pb-free JEDEC designator for Matte Tin (Sn) |
| | * | This package is Pb-free. The Pb-free JEDEC designator ((e3)) can be found on the outer packaging for this package. |

**Note**: In the event the full Microchip part number cannot be marked on one line, it will be carried over to the next line, thus limiting the number of available characters for customer-specific information.

chanhvinh.com



**Package Marking Information (Continued)**

16-Lead QFN (4x4x0.9 mm)

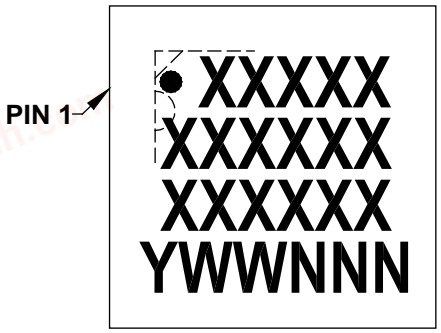


Example

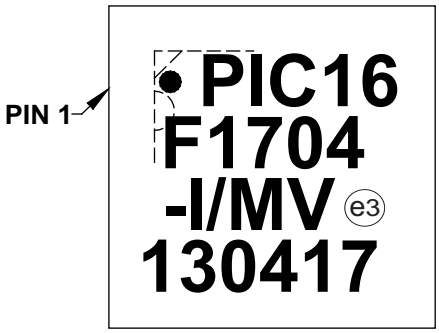


20-Lead PDIP (300 mil)

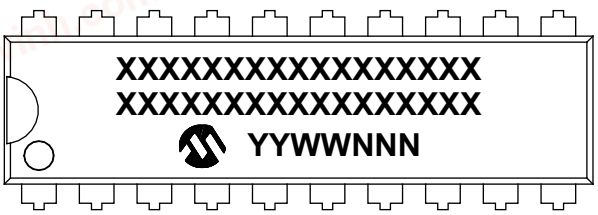


Example

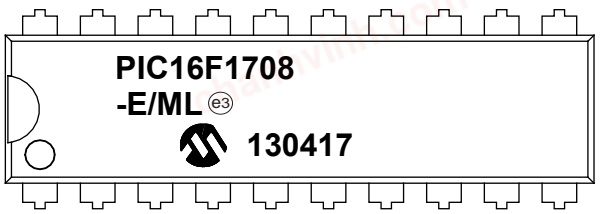


20-Lead SSOP (5.30 mm)

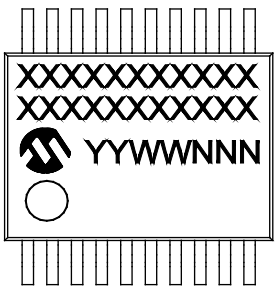


Example

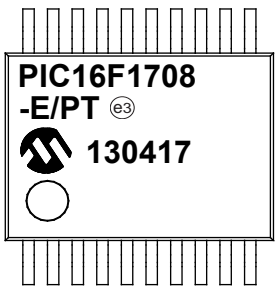


20-Lead SOIC (7.50 mm)

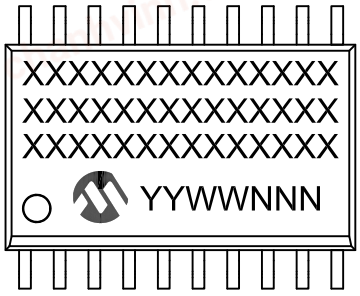


Example

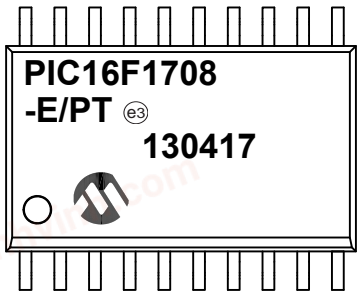



© 2013 Microchip Technology Inc.

chanhvinh.com



**Package Marking Information (Continued)**

20-Lead QFN (4x4x0.9 mm)

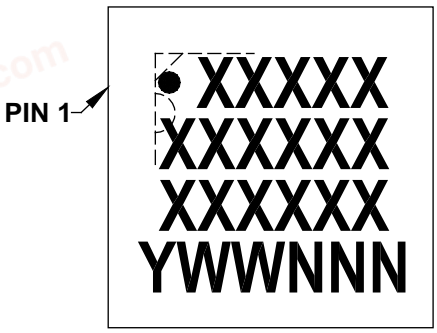


Example

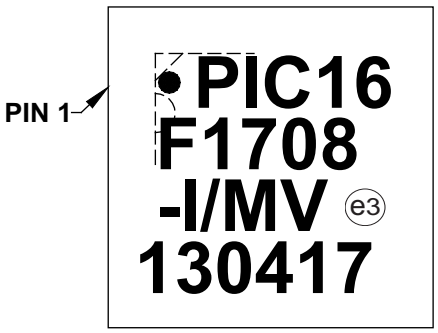

chanhvinh.com



## 35.2 Package Details

The following sections give the technical details of the packages.

### 14-Lead Plastic Dual In-Line (P) – 300 mil Body [PDIP]

**Note:** For the most current package drawings, please see the Microchip Packaging Specification located at http://www.microchip.com/packaging

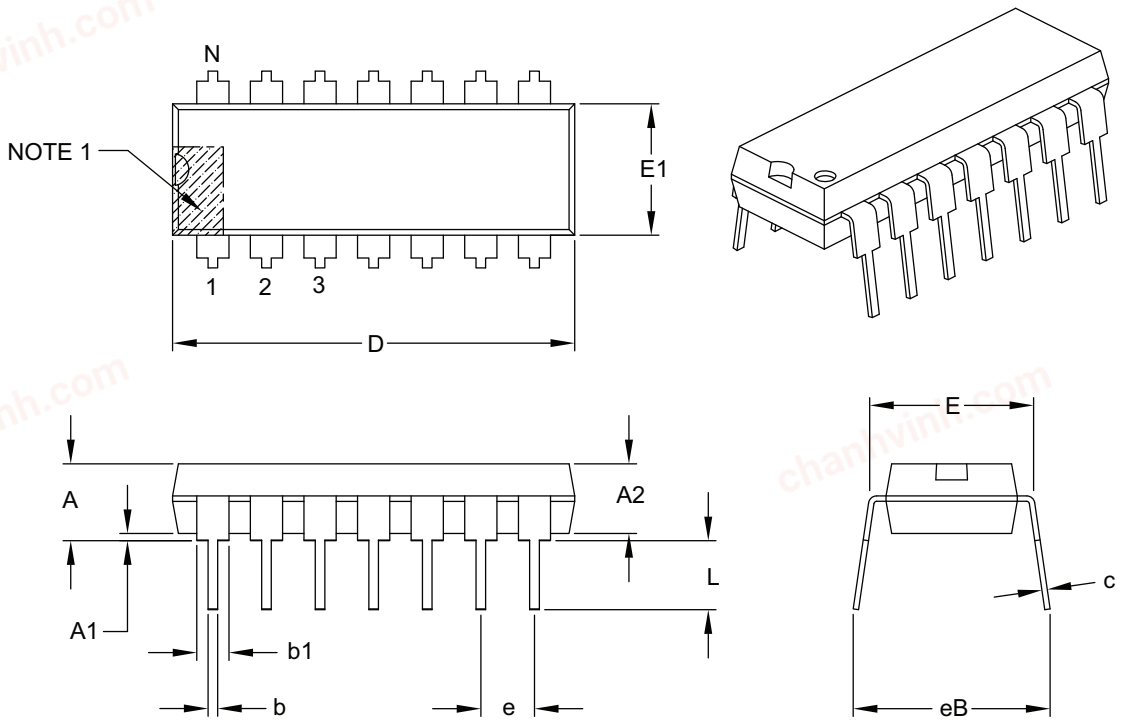


| Units | | INCHES | | |
|---|---|---|---|---|
| Dimension Limits | | MIN | NOM | MAX |
| Number of Pins | N | | 14 | |
| Pitch | e | | .100 BSC | |
| Top to Seating Plane | A | – | – | .210 |
| Molded Package Thickness | A2 | .115 | .130 | .195 |
| Base to Seating Plane | A1 | .015 | – | – |
| Shoulder to Shoulder Width | E | .290 | .310 | .325 |
| Molded Package Width | E1 | .240 | .250 | .280 |
| Overall Length | D | .735 | .750 | .775 |
| Tip to Seating Plane | L | .115 | .130 | .150 |
| Lead Thickness | c | .008 | .010 | .015 |
| Upper Lead Width | b1 | .045 | .060 | .070 |
| Lower Lead Width | b | .014 | .018 | .022 |
| Overall Row Spacing § | eB | – | – | .430 |

**Notes:**

1. Pin 1 visual index feature may vary, but must be located with the hatched area.
2. § Significant Characteristic.
3. Dimensions D and E1 do not include mold flash or protrusions. Mold flash or protrusions shall not exceed .010" per side.
4. Dimensioning and tolerancing per ASME Y14.5M.

BSC: Basic Dimension. Theoretically exact value shown without tolerances.

Microchip Technology Drawing C04-005B

 © 2013 Microchip Technology Inc.

chanhvinh.com



### 14-Lead Plastic Small Outline (SL) - Narrow, 3.90 mm Body [SOIC]

**Note:** For the most current package drawings, please see the Microchip Packaging Specification located at http://www.microchip.com/packaging

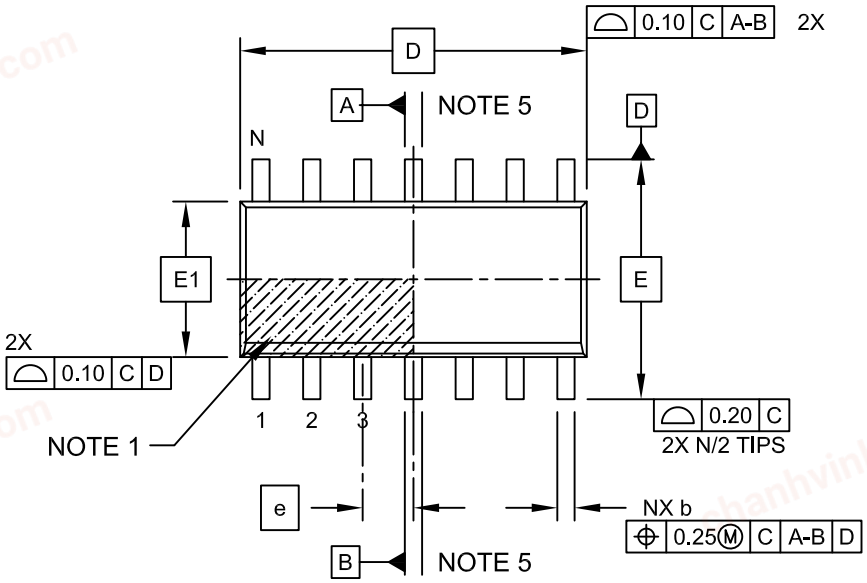


**TOP VIEW**

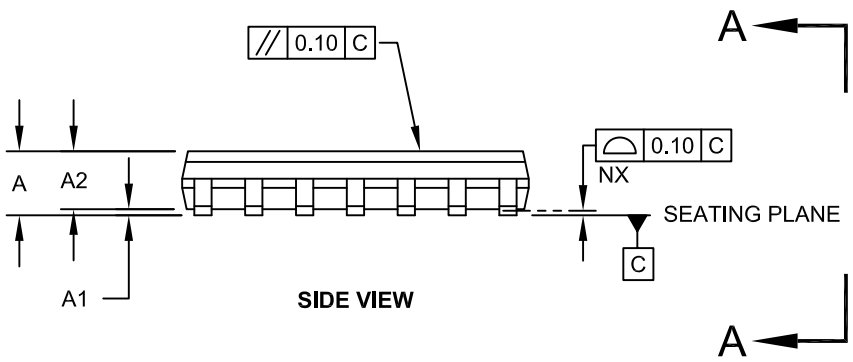


**SIDE VIEW**

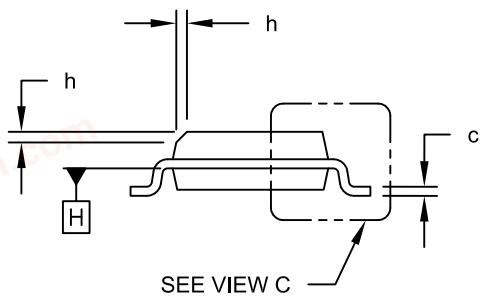


**VIEW A-A**

Microchip Technology Drawing No. C04-065C Sheet 1 of 2

chanhvinh.com



### 14-Lead Plastic Small Outline (SL) - Narrow, 3.90 mm Body [SOIC]

**Note:** For the most current package drawings, please see the Microchip Packaging Specification located at http://www.microchip.com/packaging

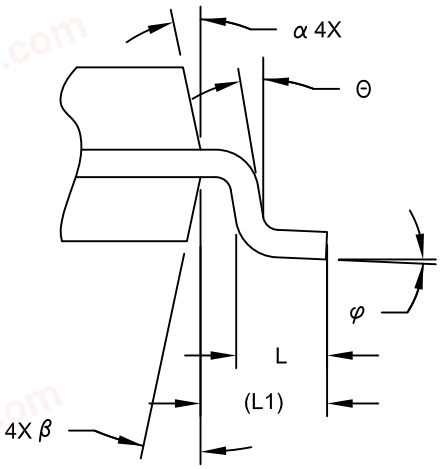


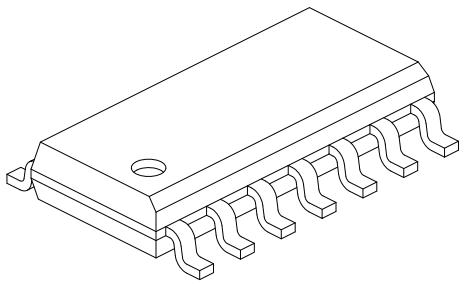

**VIEW C**

| Units | | MILLIMETERS | | |
|---|---|---|---|---|
| Dimension Limits | | MIN | NOM | MAX |
| Number of Pins | N | | 14 | |
| Pitch | e | | 1.27 BSC | |
| Overall Height | A | - | - | 1.75 |
| Molded Package Thickness | A2 | 1.25 | - | - |
| Standoff § | A1 | 0.10 | - | 0.25 |
| Overall Width | E | | 6.00 BSC | |
| Molded Package Width | E1 | | 3.90 BSC | |
| Overall Length | D | | 8.65 BSC | |
| Chamfer (Optional) | h | 0.25 | - | 0.50 |
| Foot Length | L | 0.40 | - | 1.27 |
| Footprint | L1 | | 1.04 REF | |
| Lead Angle | Θ | 0° | - | - |
| Foot Angle | φ | 0° | - | 8° |
| Lead Thickness | c | 0.10 | - | 0.25 |
| Lead Width | b | 0.31 | - | 0.51 |
| Mold Draft Angle Top | α | 5° | - | 15° |
| Mold Draft Angle Bottom | β | 5° | - | 15° |

**Notes:**

1. Pin 1 visual index feature may vary, but must be located within the hatched area.
2. § Significant Characteristic
3. Dimension D does not include mold flash, protrusions or gate burrs, which shall not exceed 0.15 mm per end. Dimension E1 does not include interlead flash or protrusion, which shall not exceed 0.25 mm per side.
4. Dimensioning and tolerancing per ASME Y14.5M
   BSC: Basic Dimension. Theoretically exact value shown without tolerances.
   REF: Reference Dimension, usually without tolerance, for information purposes only.
5. Datums A & B to be determined at Datum H.

Microchip Technology Drawing No. C04-065C Sheet 2 of 2

 © 2013 Microchip Technology Inc.

chanhvinh.com



14-Lead Plastic Small Outline (SL) - Narrow, 3.90 mm Body [SOIC]

**Note:** For the most current package drawings, please see the Microchip Packaging Specification located at http://www.microchip.com/packaging

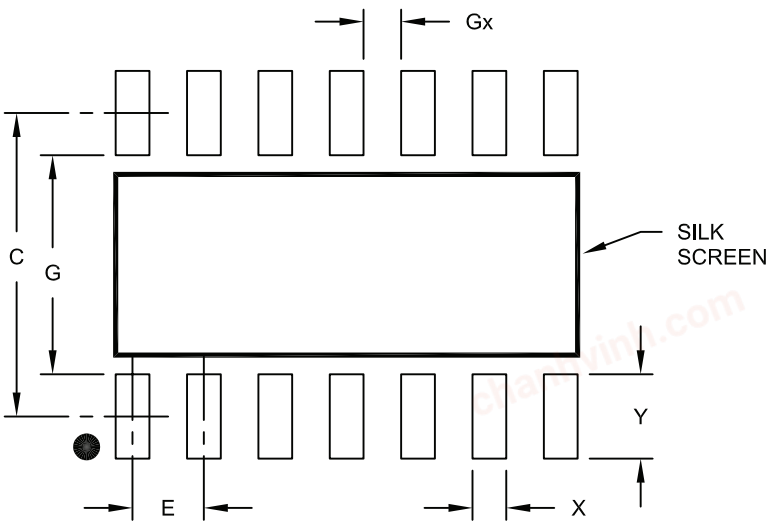


RECOMMENDED LAND PATTERN

| Units | | MILLIMETERS | | |
|---|---|---|---|---|
| Dimension Limits | | MIN | NOM | MAX |
| Contact Pitch | E | | 1.27 BSC | |
| Contact Pad Spacing | C | | 5.40 | |
| Contact Pad Width | X | | | 0.60 |
| Contact Pad Length | Y | | | 1.50 |
| Distance Between Pads | Gx | 0.67 | | |
| Distance Between Pads | G | 3.90 | | |

Notes:

1. Dimensioning and tolerancing per ASME Y14.5M

BSC: Basic Dimension. Theoretically exact value shown without tolerances.

Microchip Technology Drawing No. C04-2065A

chanhvinh.com



### 14-Lead Plastic Thin Shrink Small Outline (ST) - 4.4 mm Body [TSSOP]

**Note:** For the most current package drawings, please see the Microchip Packaging Specification located at http://www.microchip.com/packaging

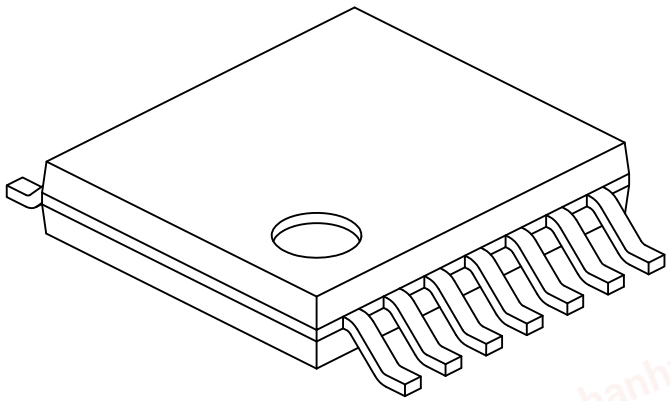

| Units | | MILLIMETERS | | |
|---|---|---|---|---|
| Dimension Limits | | MIN | NOM | MAX |
| Number of Pins | N | | 14 | |
| Pitch | e | | 0.65 BSC | |
| Overall Height | A | - | - | 1.20 |
| Molded Package Thickness | A2 | 0.80 | 1.00 | 1.05 |
| Standoff | A1 | 0.05 | - | 0.15 |
| Overall Width | E | | 6.40 BSC | |
| Molded Package Width | E1 | 4.30 | 4.40 | 4.50 |
| Molded Package Length | D | 4.90 | 5.00 | 5.10 |
| Foot Length | L | 0.45 | 0.60 | 0.75 |
| Footprint | (L1) | | 1.00 REF | |
| Foot Angle | φ | 0° | - | 8° |
| Lead Thickness | c | 0.09 | - | 0.20 |
| Lead Width | b | 0.19 | - | 0.30 |

Notes:

1. Pin 1 visual index feature may vary, but must be located within the hatched area.
2. Dimensions D and E1 do not include mold flash or protrusions. Mold flash or protrusions shall not exceed 0.15mm per side.
3. Dimensioning and tolerancing per ASME Y14.5M

BSC: Basic Dimension. Theoretically exact value shown without tolerances.
REF: Reference Dimension, usually without tolerance, for information purposes only.

Microchip Technology Drawing No. C04-087C Sheet 2 of 2

 © 2013 Microchip Technology Inc.

chanhvinh.com



### 14-Lead Plastic Thin Shrink Small Outline (ST) - 4.4 mm Body [TSSOP]

**Note:** For the most current package drawings, please see the Microchip Packaging Specification located at http://www.microchip.com/packaging

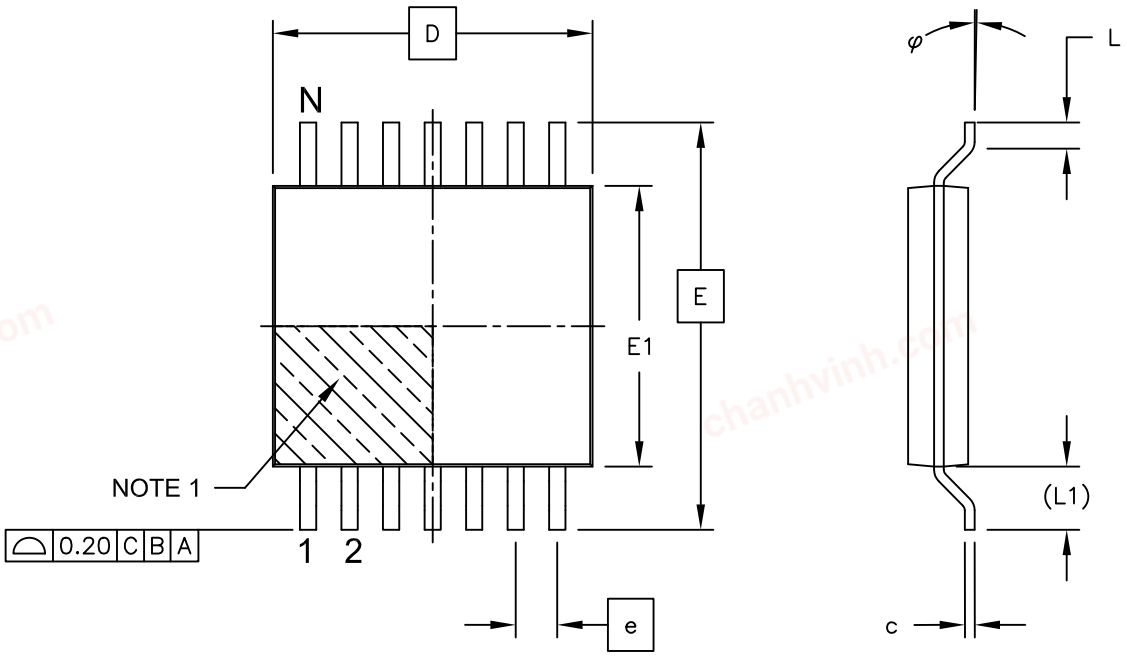


TOP VIEW

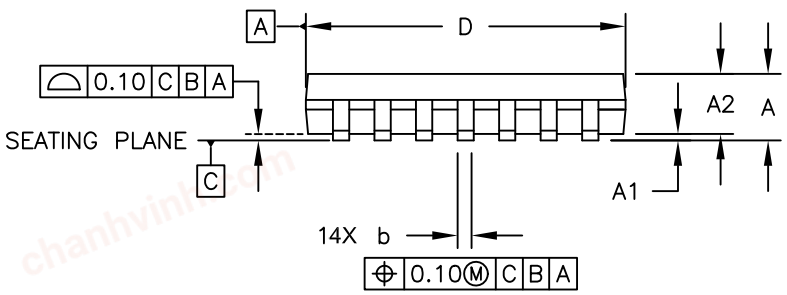


SIDE VIEW

Microchip Technology Drawing C04-087C Sheet 1 of 2

chanhvinh.com



### 16-Lead Plastic Quad Flat, No Lead Package (ML) – 4x4x0.9 mm Body [QFN]

**Note:** For the most current package drawings, please see the Microchip Packaging Specification located at http://www.microchip.com/packaging

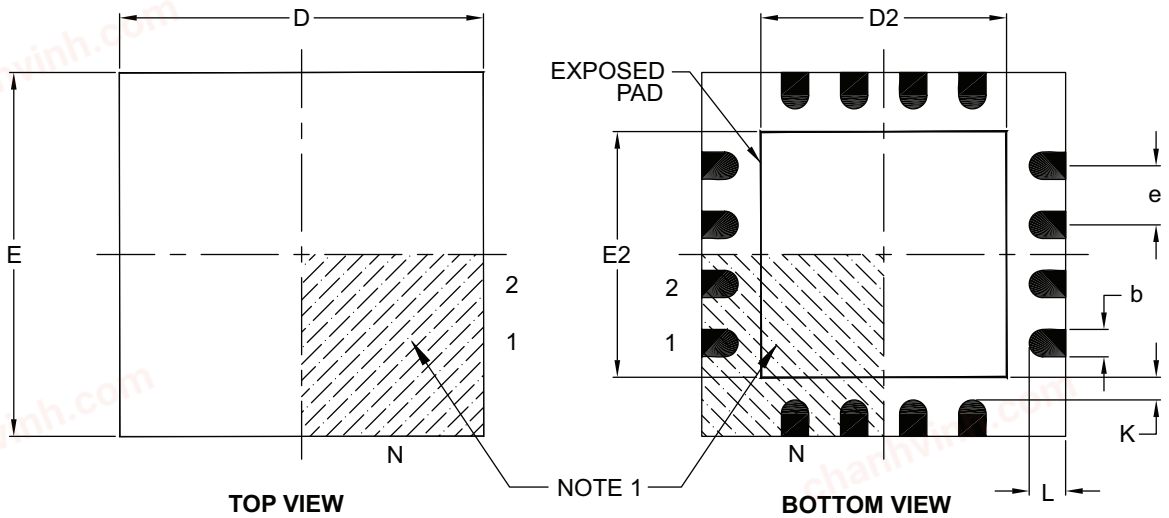


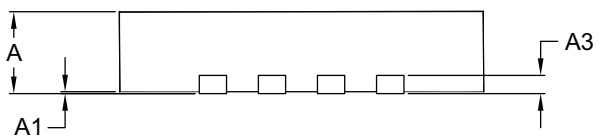


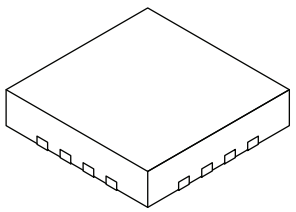

| Units | | MILLIMETERS | | |
|---|---|---|---|---|
| Dimension Limits | | MIN | NOM | MAX |
| Number of Pins | N | | 16 | |
| Pitch | e | | 0.65 BSC | |
| Overall Height | A | 0.80 | 0.90 | 1.00 |
| Standoff | A1 | 0.00 | 0.02 | 0.05 |
| Contact Thickness | A3 | | 0.20 REF | |
| Overall Width | E | | 4.00 BSC | |
| Exposed Pad Width | E2 | 2.50 | 2.65 | 2.80 |
| Overall Length | D | | 4.00 BSC | |
| Exposed Pad Length | D2 | 2.50 | 2.65 | 2.80 |
| Contact Width | b | 0.25 | 0.30 | 0.35 |
| Contact Length | L | 0.30 | 0.40 | 0.50 |
| Contact-to-Exposed Pad | K | 0.20 | – | – |

**Notes:**

1. Pin 1 visual index feature may vary, but must be located within the hatched area.
2. Package is saw singulated.
3. Dimensioning and tolerancing per ASME Y14.5M.

BSC: Basic Dimension. Theoretically exact value shown without tolerances.
REF: Reference Dimension, usually without tolerance, for information purposes only.

Microchip Technology Drawing C04-127B

 © 2013 Microchip Technology Inc.

chanhvinh.com



### 16-Lead Plastic Quad Flat, No Lead Package (ML) - 4x4x0.9mm Body [QFN]

**Note:** For the most current package drawings, please see the Microchip Packaging Specification located at http://www.microchip.com/packaging

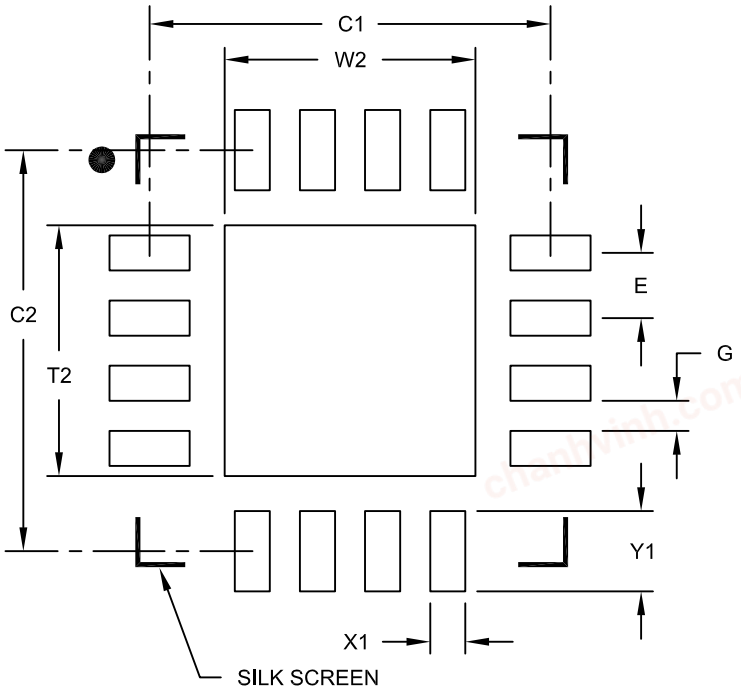


RECOMMENDED LAND PATTERN

| Units | | MILLIMETERS | | |
|---|---|---|---|---|
| Dimension Limits | | MIN | NOM | MAX |
| Contact Pitch | E | | 0.65 BSC | |
| Optional Center Pad Width | W2 | | | 2.50 |
| Optional Center Pad Length | T2 | | | 2.50 |
| Contact Pad Spacing | C1 | | 4.00 | |
| Contact Pad Spacing | C2 | | 4.00 | |
| Contact Pad Width (X16) | X1 | | | 0.35 |
| Contact Pad Length (X16) | Y1 | | | 0.80 |
| Distance Between Pads | G | 0.30 | | |

Notes:

1. Dimensioning and tolerancing per ASME Y14.5M

BSC: Basic Dimension. Theoretically exact value shown without tolerances.

Microchip Technology Drawing No. C04-2127A

chanhvinh.com



### 20-Lead Plastic Dual In-Line (P) – 300 mil Body [PDIP]

**Note:** For the most current package drawings, please see the Microchip Packaging Specification located at http://www.microchip.com/packaging

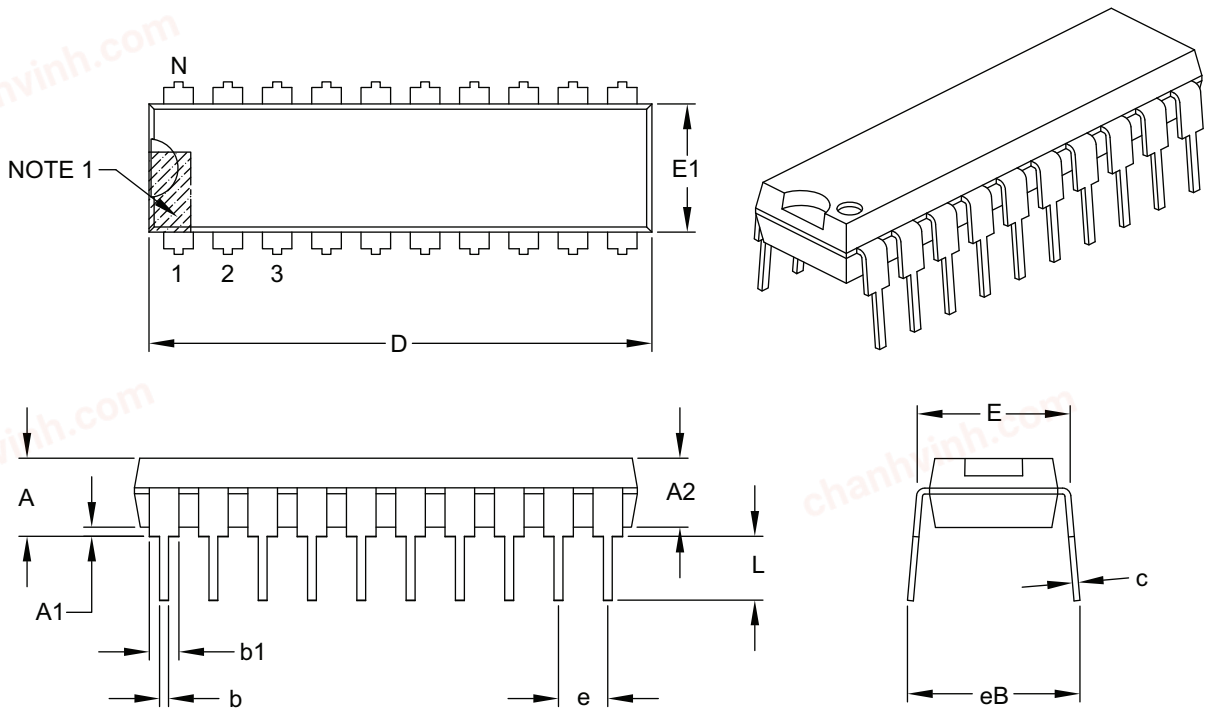


| Units | | INCHES | | |
|---|---|---|---|---|
| Dimension Limits | | MIN | NOM | MAX |
| Number of Pins | N | | 20 | |
| Pitch | e | | .100 BSC | |
| Top to Seating Plane | A | – | – | .210 |
| Molded Package Thickness | A2 | .115 | .130 | .195 |
| Base to Seating Plane | A1 | .015 | – | – |
| Shoulder to Shoulder Width | E | .300 | .310 | .325 |
| Molded Package Width | E1 | .240 | .250 | .280 |
| Overall Length | D | .980 | 1.030 | 1.060 |
| Tip to Seating Plane | L | .115 | .130 | .150 |
| Lead Thickness | c | .008 | .010 | .015 |
| Upper Lead Width | b1 | .045 | .060 | .070 |
| Lower Lead Width | b | .014 | .018 | .022 |
| Overall Row Spacing § | eB | – | – | .430 |

**Notes:**

1. Pin 1 visual index feature may vary, but must be located within the hatched area.
2. § Significant Characteristic.
3. Dimensions D and E1 do not include mold flash or protrusions. Mold flash or protrusions shall not exceed .010" per side.
4. Dimensioning and tolerancing per ASME Y14.5M.

BSC: Basic Dimension. Theoretically exact value shown without tolerances.

Microchip Technology Drawing C04-019B

 © 2013 Microchip Technology Inc.

chanhvinh.com



## 20-Lead Plastic Shrink Small Outline (SS) – 5.30 mm Body [SSOP]

**Note:** For the most current package drawings, please see the Microchip Packaging Specification located at http://www.microchip.com/packaging

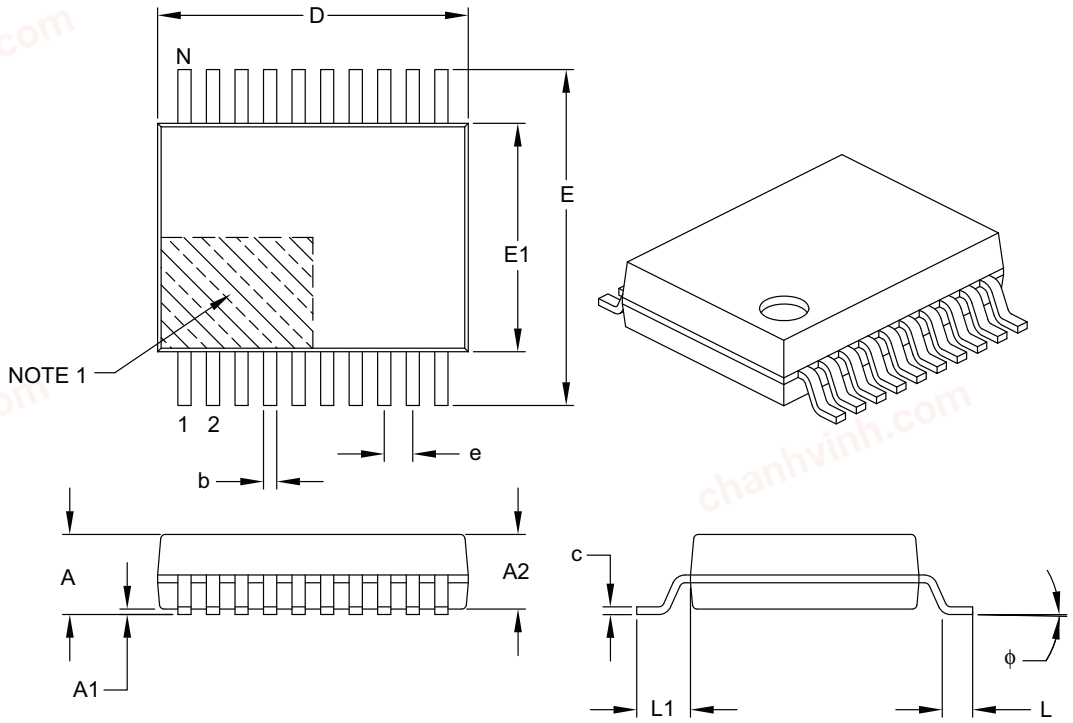


| Units | | MILLIMETERS | | |
|---|---|---|---|---|
| Dimension Limits | | MIN | NOM | MAX |
| Number of Pins | N | | 20 | |
| Pitch | e | | 0.65 BSC | |
| Overall Height | A | – | – | 2.00 |
| Molded Package Thickness | A2 | 1.65 | 1.75 | 1.85 |
| Standoff | A1 | 0.05 | – | – |
| Overall Width | E | 7.40 | 7.80 | 8.20 |
| Molded Package Width | E1 | 5.00 | 5.30 | 5.60 |
| Overall Length | D | 6.90 | 7.20 | 7.50 |
| Foot Length | L | 0.55 | 0.75 | 0.95 |
| Footprint | L1 | | 1.25 REF | |
| Lead Thickness | c | 0.09 | – | 0.25 |
| Foot Angle | ϕ | 0° | 4° | 8° |
| Lead Width | b | 0.22 | – | 0.38 |

**Notes:**

1. Pin 1 visual index feature may vary, but must be located within the hatched area.
2. Dimensions D and E1 do not include mold flash or protrusions. Mold flash or protrusions shall not exceed 0.20 mm per side.
3. Dimensioning and tolerancing per ASME Y14.5M.

BSC: Basic Dimension. Theoretically exact value shown without tolerances.
REF: Reference Dimension, usually without tolerance, for information purposes only.

Microchip Technology Drawing C04-072B

chanhvinh.com



20-Lead Plastic Shrink Small Outline (SS) - 5.30 mm Body [SSOP]

**Note:** For the most current package drawings, please see the Microchip Packaging Specification located at http://www.microchip.com/packaging

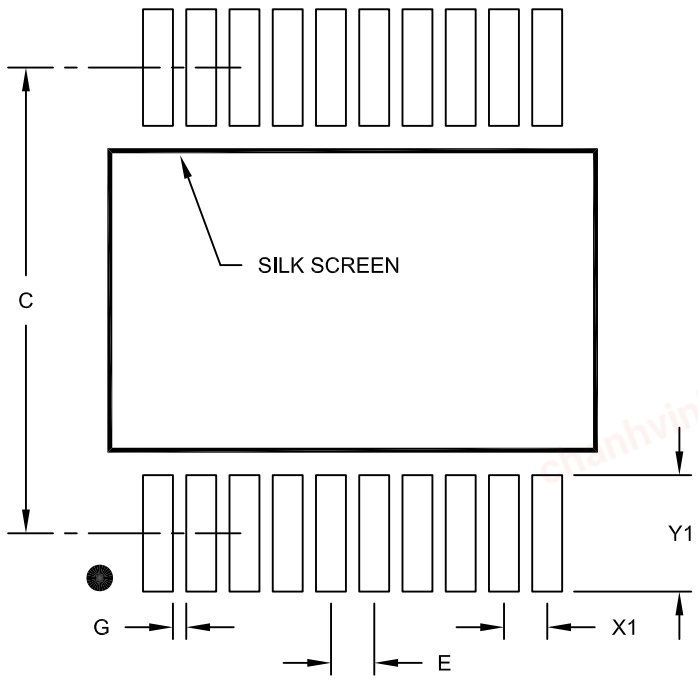


RECOMMENDED LAND PATTERN

| Units | | MILLIMETERS | | |
|---|---|---|---|---|
| Dimension Limits | | MIN | NOM | MAX |
| Contact Pitch | E | | 0.65 BSC | |
| Contact Pad Spacing | C | | 7.20 | |
| Contact Pad Width (X20) | X1 | | | 0.45 |
| Contact Pad Length (X20) | Y1 | | | 1.75 |
| Distance Between Pads | G | 0.20 | | |

Notes:

1. Dimensioning and tolerancing per ASME Y14.5M

BSC: Basic Dimension. Theoretically exact value shown without tolerances.

Microchip Technology Drawing No. C04-2072A

 © 2013 Microchip Technology Inc.

chanhvinh.com



### 20-Lead Plastic Small Outline (SO) - Wide, 7.50 mm Body [SOIC]

**Note:** For the most current package drawings, please see the Microchip Packaging Specification located at http://www.microchip.com/packaging

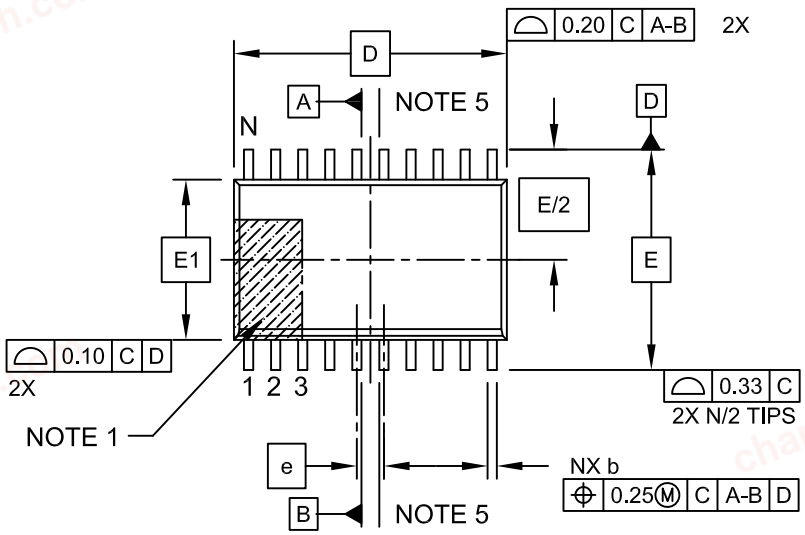


**TOP VIEW**

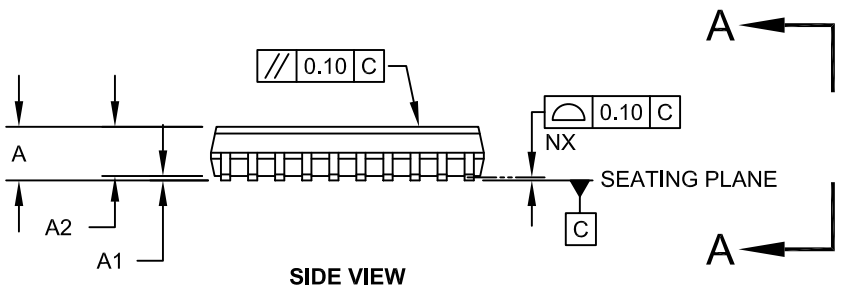


**SIDE VIEW**

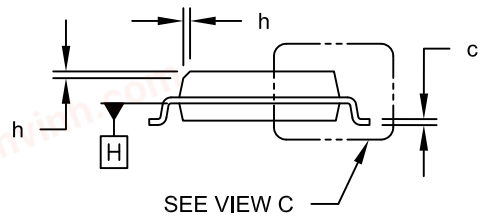


**VIEW A-A**

Microchip Technology Drawing C04-094C Sheet 1 of 2

chanhvinh.com



### 20-Lead Plastic Small Outline (SO) - Wide, 7.50 mm Body [SOIC]

**Note:** For the most current package drawings, please see the Microchip Packaging Specification located at http://www.microchip.com/packaging

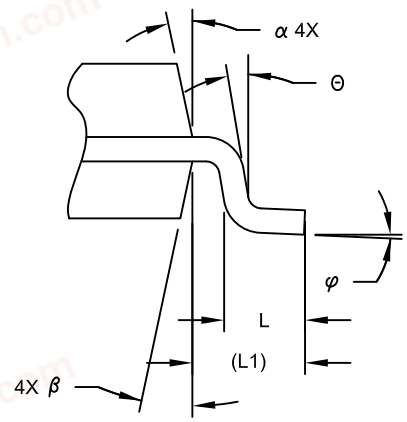


VIEW C

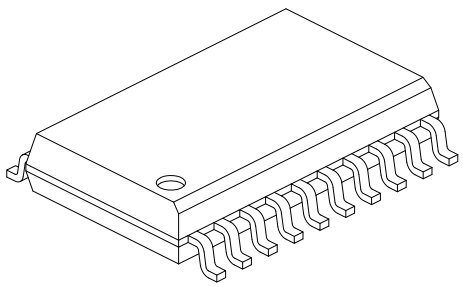

| Units | | MILLIMETERS | | |
|---|---|---|---|---|
| Dimension Limits | | MIN | NOM | MAX |
| Number of Pins | N | | 20 | |
| Pitch | e | | 1.27 BSC | |
| Overall Height | A | - | - | 2.65 |
| Molded Package Thickness | A2 | 2.05 | - | - |
| Standoff § | A1 | 0.10 | - | 0.30 |
| Overall Width | E | | 10.30 BSC | |
| Molded Package Width | E1 | | 7.50 BSC | |
| Overall Length | D | | 12.80 BSC | |
| Chamfer (Optional) | h | 0.25 | - | 0.75 |
| Foot Length | L | 0.40 | - | 1.27 |
| Footprint | L1 | | 1.40 REF | |
| Lead Angle | Θ | 0° | - | - |
| Foot Angle | φ | 0° | - | 8° |
| Lead Thickness | c | 0.20 | - | 0.33 |
| Lead Width | b | 0.31 | - | 0.51 |
| Mold Draft Angle Top | α | 5° | - | 15° |
| Mold Draft Angle Bottom | β | 5° | - | 15° |

**Notes:**

1. Pin 1 visual index feature may vary, but must be located within the hatched area.
2. § Significant Characteristic
3. Dimension D does not include mold flash, protrusions or gate burrs, which shall not exceed 0.15 mm per end. Dimension E1 does not include interlead flash or protrusion, which shall not exceed 0.25 mm per side.
4. Dimensioning and tolerancing per ASME Y14.5M
   BSC: Basic Dimension. Theoretically exact value shown without tolerances.
   REF: Reference Dimension, usually without tolerance, for information purposes only.
5. Datums A & B to be determined at Datum H.

Microchip Technology Drawing No. C04-094C Sheet 2 of 2

 © 2013 Microchip Technology Inc.

chanhvinh.com



20-Lead Plastic Small Outline (SO) - Wide, 7.50 mm Body [SOIC]

**Note:** For the most current package drawings, please see the Microchip Packaging Specification located at http://www.microchip.com/packaging

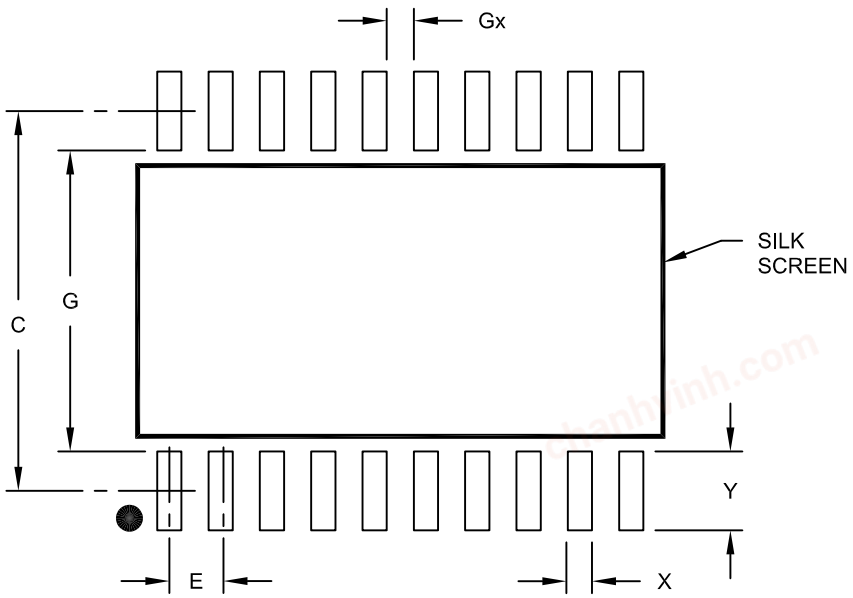


RECOMMENDED LAND PATTERN

| Units | | MILLIMETERS | | |
|---|---|---|---|---|
| Dimension Limits | | MIN | NOM | MAX |
| Contact Pitch | E | | 1.27 BSC | |
| Contact Pad Spacing | C | | 9.40 | |
| Contact Pad Width (X20) | X | | | 0.60 |
| Contact Pad Length (X20) | Y | | | 1.95 |
| Distance Between Pads | Gx | 0.67 | | |
| Distance Between Pads | G | 7.45 | | |

Notes:

1. Dimensioning and tolerancing per ASME Y14.5M

BSC: Basic Dimension. Theoretically exact value shown without tolerances.

Microchip Technology Drawing No. C04-2094A

chanhvinh.com



### 20-Lead Plastic Quad Flat, No Lead Package (ML) – 4x4x0.9 mm Body [QFN]

**Note:** For the most current package drawings, please see the Microchip Packaging Specification located at http://www.microchip.com/packaging

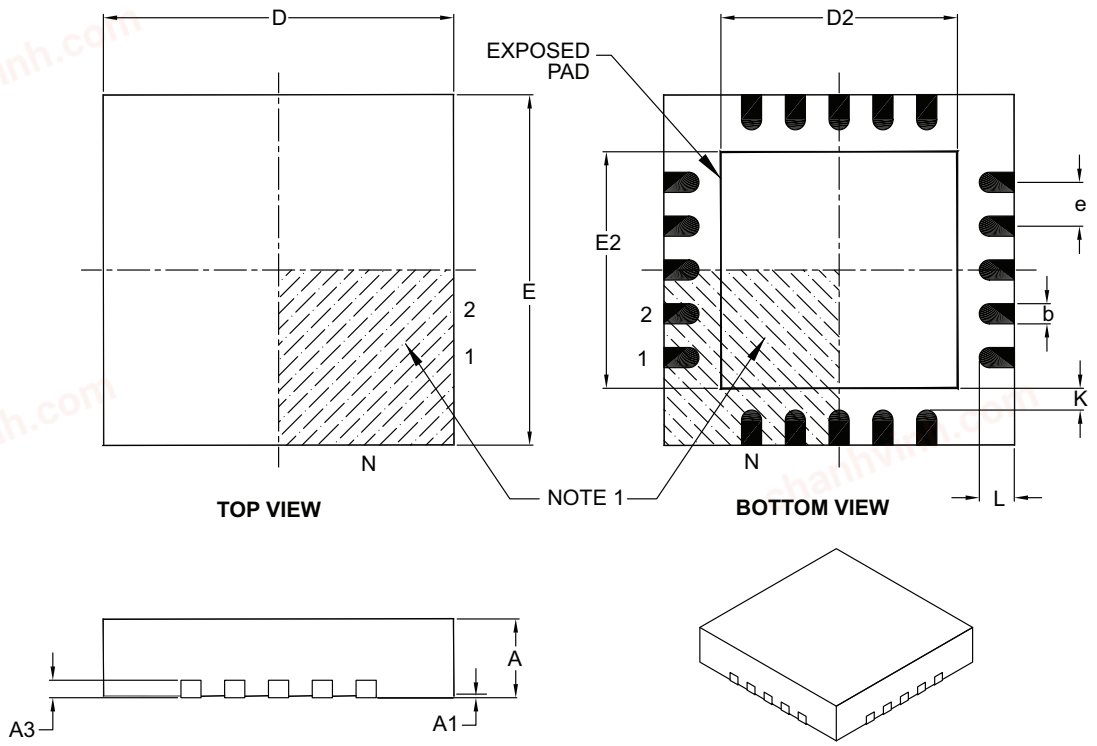





| Units | | MILLIMETERS | | |
|---|---|---|---|---|
| Dimension Limits | | MIN | NOM | MAX |
| Number of Pins | N | | 20 | |
| Pitch | e | | 0.50 BSC | |
| Overall Height | A | 0.80 | 0.90 | 1.00 |
| Standoff | A1 | 0.00 | 0.02 | 0.05 |
| Contact Thickness | A3 | | 0.20 REF | |
| Overall Width | E | | 4.00 BSC | |
| Exposed Pad Width | E2 | 2.60 | 2.70 | 2.80 |
| Overall Length | D | | 4.00 BSC | |
| Exposed Pad Length | D2 | 2.60 | 2.70 | 2.80 |
| Contact Width | b | 0.18 | 0.25 | 0.30 |
| Contact Length | L | 0.30 | 0.40 | 0.50 |
| Contact-to-Exposed Pad | K | 0.20 | – | – |

**Notes:**

1. Pin 1 visual index feature may vary, but must be located within the hatched area.
2. Package is saw singulated.
3. Dimensioning and tolerancing per ASME Y14.5M.

BSC: Basic Dimension. Theoretically exact value shown without tolerances.
REF: Reference Dimension, usually without tolerance, for information purposes only.

Microchip Technology Drawing C04-126B

 © 2013 Microchip Technology Inc.

chanhvinh.com



20-Lead Plastic Quad Flat, No Lead Package (ML) - 4x4 mm Body [QFN]
With 0.40 mm Contact Length

**Note:** For the most current package drawings, please see the Microchip Packaging Specification located at http://www.microchip.com/packaging

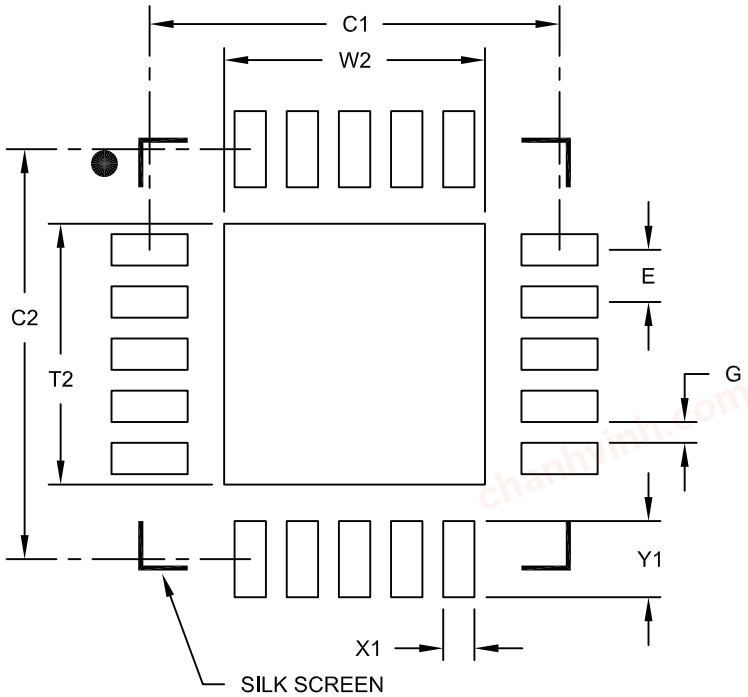


RECOMMENDED LAND PATTERN

| Units | | MILLIMETERS | | |
|---|---|---|---|---|
| Dimension Limits | | MIN | NOM | MAX |
| Contact Pitch | E | | 0.50 BSC | |
| Optional Center Pad Width | W2 | | | 2.50 |
| Optional Center Pad Length | T2 | | | 2.50 |
| Contact Pad Spacing | C1 | | 3.93 | |
| Contact Pad Spacing | C2 | | 3.93 | |
| Contact Pad Width | X1 | | | 0.30 |
| Contact Pad Length | Y1 | | | 0.73 |
| Distance Between Pads | G | 0.20 | | |

Notes:

1. Dimensioning and tolerancing per ASME Y14.5M

BSC: Basic Dimension. Theoretically exact value shown without tolerances.

Microchip Technology Drawing No. C04-2126A

chanhvinh.com



**NOTES:**

chanhvinh.com

 © 2013 Microchip Technology Inc.

chanhvinh.com



## APPENDIX A: DATA SHEET REVISION HISTORY

### Revision A (07/2013)

Initial release.

### Revision B (09/2013)

Moved Note 1 from Table 3-10 to Table 3-9; Register 4-2, Removed overbar from bit 7; Table 8-1, removed IOCBF, IOCBN, IOCBP; Register 12-3, revised bit 4-0; Revised Table 32-1, Param. D003; Revised Table 32-2, added Note 5 to D015, revised Note 5; Revised Table 32-7, OS03 Min.; Revised Table 32-17, OPA06, Min.; Revised Register 21-1, bit 6 description.

chanhvinh.com



**NOTES:**

chanhvinh.com

 © 2013 Microchip Technology Inc.

chanhvinh.com



# INDEX

## Numerics


8-Bit Digital-to-Analog Converter (DAC1) ..... 241
8-bit Digital-to-Analog Converter (DAC1)
    Effects of a Reset ..... 242


## A


A/D
    Analog-to-Digital Converter ..... 269
Absolute Maximum Ratings ..... 385
AC Characteristics
    Load Conditions ..... 397
ACKSTAT ..... 317
ACKSTAT Status Flag ..... 317
ADC ..... 223
    Acquisition Requirements ..... 234
    Associated registers ..... 236
    Block Diagram ..... 223
    Calculating Acquisition Time ..... 234
    Channel Selection ..... 224
    Configuration ..... 224
    Configuring Interrupt ..... 228
    Conversion Clock ..... 224
    Conversion Procedure ..... 228
    Internal Sampling Switch (Rss) Impedance ..... 234
    Interrupts ..... 226
    Operation ..... 227
    Operation During Sleep ..... 227
    Port Configuration ..... 224
    Reference Voltage (VREF) ..... 224
    Source Impedance ..... 234
    Special Event Trigger ..... 227
    Specifications ..... 407, 408
    Starting an ADC Conversion ..... 226
ADCON0 Register ..... 32, 229
ADCON1 Register ..... 32, 230
ADCON2 Register ..... 231
ADDFSR ..... 375
ADDWFC ..... 375
ADRESH Register ..... 32
ADRESH Register (ADFM = 0) ..... 232
ADRESH Register (ADFM = 1) ..... 233
ADRESL Register ..... 32
ADRESL Register (ADFM = 0) ..... 232
ADRESL Register (ADFM = 1) ..... 233
Analog-to-Digital Converter. *See* ADC
Assembler
    MPASM Assembler ..... 436


## B


Bank 0 ..... 32
Bank 1 ..... 32
Bank 10 ..... 35
Bank 11 ..... 36
Bank 12 ..... 36
Bank 13 ..... 36
Bank 14-27 ..... 36
Bank 2 ..... 33
Bank 28 ..... 37
Bank 29 ..... 38
Bank 3 ..... 33
Bank 30 ..... 39
Bank 4 ..... 34
Bank 5 ..... 34
Bank 6 ..... 34
Bank 7 ..... 35
Bank 8 ..... 35
Bank 9 ..... 35
BAUD1CON Register ..... 349
BF ..... 317, 319
BF Status Flag ..... 317, 319
Block Diagrams
    (CCP) Capture Mode Operation ..... 272
    ADC ..... 223
    ADC Transfer Function ..... 235
    Analog Input Model ..... 235
    CCP PWM ..... 276
    Compare ..... 274
    Digital-to-Analog Converter (DAC1) ..... 242
    EUSART Receive ..... 338
    EUSART Transmit ..... 337
    OPA Module ..... 237
    Timer0 ..... 249
    Timer1 ..... 253
    Timer1 Gate ..... 258, 259, 260
    Timer2 ..... 265
    Voltage Reference Output Buffer Example ..... 242
    Zero Cross Detection (ZCD) ..... 245
BRA ..... 376
Break Character (12-bit) Transmit and Receive ..... 358
Brown-out Reset (BOR)
    Specifications ..... 403
    Timing and Characteristics ..... 404


## C


C Compilers
    MPLAB C18 ..... 436
CALL ..... 377
CALLW ..... 377
Capture Module. *See* Capture/Compare/PWM(CCP)
Capture/Compare/PWM ..... 271
Capture/Compare/PWM (CCP) ..... 272
    Associated Registers w/ PWM ..... 279
    Capture Mode ..... 272
    CCPx Pin Configuration ..... 272
    Compare Mode ..... 274
        CCPx Pin Configuration ..... 274
        Software Interrupt Mode ..... 272, 274
        Special Event Trigger ..... 274
        Timer1 Mode Resource ..... 272, 274
    Prescaler ..... 272
    PWM Mode
        Duty Cycle ..... 277
        Effects of Reset ..... 279
        Example PWM Frequencies and Resolutions, 20 MHZ ..... 278
        Example PWM Frequencies and Resolutions, 8 MHz ..... 278
        Operation in Sleep Mode ..... 279
        Resolution ..... 278
        System Clock Frequency Changes ..... 279
    PWM Operation ..... 276
    PWM Overview ..... 276
    PWM Period ..... 277
    PWM Setup ..... 277
    Specifications ..... 406
CCP. *See* Capture/Compare/PWM
CCPTMRS Register ..... 269

chanhvinh.com




CCPTMRS0 Register ..... 269
CCPxCON (CCPx) Register ..... 280
CLCDATA Register ..... 220
CLCxCON Register ..... 213
CLCxGLS0 Register ..... 216
CLCxGLS1 Register ..... 217
CLCxGLS2 Register ..... 218
CLCxGLS3 Register ..... 219
CLCxPOL Register ..... 214
CLCxSEL0 Register ..... 215
CLCxSEL1 Register ..... 215
CLCxSEL2 Register ..... 215
CLCxSEL3 Register ..... 215
Clock Accuracy with Asynchronous Operation ..... 346
Code Examples
  ADC Conversion ..... 228
  Changing Between Capture Prescalers ..... 272
Comparator Specifications ..... 410, 411
Comparators
  C2OUT as T1 Gate ..... 255
Compare Module. *See* Capture/Compare/PWM (CCP)
Configuration as OPAMP or Comparator ..... 238
Core Function Register ..... 31
Customer Change Notification Service ..... 467
Customer Notification Service ..... 467
Customer Support ..... 467

**D**

DAC1CON0 (DAC1 Converter Control 0) Register ..... 244
DAC1CON1 (DAC1 Converter Control 1) Register ..... 244
Data Memory ..... 22
DC and AC Characteristics ..... 419
  Graphs and Tables ..... 419
DC Characteristics
  Extended and Industrial ..... 394
  Industrial and Extended ..... 388
Development Support ..... 435
Digital-to-Analog Converter (DAC)
  Specifications ..... 411
Digital-to-Analog Converter (DAC1)
  Associated Registers ..... 244

**E**

Effects of Reset
  PWM mode ..... 279
Electrical Specifications ..... 385
Enhanced Universal Synchronous Asynchronous
  Receiver Transmitter (EUSART) ..... 337
EUSART ..... 337
  Associated Registers
    Baud Rate Generator ..... 351
  Asynchronous Mode ..... 339
    12-bit Break Transmit and Receive ..... 358
    Associated Registers
      Receive ..... 345
      Transmit ..... 341
    Auto-Wake-up on Break ..... 356
    Baud Rate Generator (BRG) ..... 350
    Clock Accuracy ..... 346
    Receiver ..... 342
    Setting up 9-bit Mode with Address Detect ..... 344
    Transmitter ..... 339
  Baud Rate Generator (BRG)
    Auto Baud Rate Detect ..... 355
    Baud Rate Error, Calculating ..... 350
    Baud Rates, Asynchronous Modes ..... 352
    Formulas ..... 351
    High Baud Rate Select (BRGH Bit) ..... 350
  Synchronous Master Mode ..... 359, 364
    Associated Registers
      Receive ..... 363
      Transmit ..... 361
    Reception ..... 362
    Transmission ..... 359
  Synchronous Slave Mode
    Associated Registers
      Receive ..... 366
      Transmit ..... 365
    Reception ..... 366
    Transmission ..... 364
Extended Instruction Set
  ADDFSR ..... 375

**F**

Firmware Instructions ..... 371
FSR0H Register ..... 31
FSR0L Register ..... 31
FSR1H Register ..... 31
FSR1L Register ..... 31

**I**

$I^2C$ Mode (MSSP)
  Acknowledge Sequence Timing ..... 321
  Bus Collision
    During a Repeated Start Condition ..... 325
    During a Stop Condition ..... 326
  Effects of a Reset ..... 322
  $I^2C$ Clock Rate w/BRG ..... 328
  Master Mode
    Operation ..... 313
    Reception ..... 319
    Start Condition Timing ..... 315, 316
    Transmission ..... 317
  Multi-Master Communication, Bus Collision and
    Arbitration ..... 322
  Multi-Master Mode ..... 322
  Read/Write Bit Information (R/$\overline{W}$ Bit) ..... 298
  Slave Mode
    Transmission ..... 303
  Sleep Operation ..... 322
  Stop Condition Timing ..... 321
INDF0 Register ..... 31
INDF1 Register ..... 31
Indirect Addressing ..... 44
Instruction Format ..... 372
Instruction Set ..... 371
  ADDLW ..... 375
  ADDWF ..... 375
  ADDWFC ..... 375
  ANDLW ..... 375
  ANDWF ..... 375
  BCF ..... 376
  BRA ..... 376
  BSF ..... 376
  BTFSC ..... 376
  BTFSS ..... 376
  CALL ..... 377
  CALLW ..... 377
  CLRF ..... 377
  CLRW ..... 377
  CLRWDT ..... 377
  COMF ..... 377


 © 2013 Microchip Technology Inc.

chanhvinh.com




DECF ... 377
DECFSZ ... 378
GOTO ... 378
INCF ... 378
INCFSZ ... 378
IORLW ... 378
IORWF ... 378
LSLF ... 379
LSRF ... 379
MOVF ... 379
MOVIW ... 380
MOVLB ... 380
MOVLW ... 380
MOVWF ... 380
MOVWI ... 381
NOP ... 381
OPTION ... 381
RESET ... 381
RETFIE ... 382
RETLW ... 382
RETURN ... 382
RLF ... 382
RRF ... 383
SLEEP ... 383
SUBLW ... 383
SUBWF ... 383
SUBWFB ... 383
SWAPF ... 384
TRIS ... 384
XORLW ... 384
XORWF ... 384
Internal Oscillator Block
INTOSC
Specifications ... 399
Internal Sampling Switch (Rss) Impedance ... 234
Internet Address ... 467
Interrupts
ADC ... 228
TMR1 ... 257
INTOSC Specifications ... 399

**L**

Load Conditions ... 397
LSLF ... 379
LSRF ... 379

**M**

Master Synchronous Serial Port. *See* MSSP
Memory Organization
Data ... 22
Program ... 19
Microchip Internet Web Site ... 467
MOVIW ... 380
MOVLB ... 380
MOVWI ... 381
MPLAB ASM30 Assembler, Linker, Librarian ... 436
MPLAB Integrated Development Environment Software ... 435
MPLAB PM3 Device Programmer ... 437
MPLAB REAL ICE In-Circuit Emulator System ... 437
MPLINK Object Linker/MPLIB Object Librarian ... 436
MSSP ... 281
SPI Mode ... 284
SSP1BUF Register ... 288
SSP1SR Register ... 288
MSSPx
I²C Mode ... 293
I²C Mode Operation ... 295

**O**

OPA Module
Associated Registers ... 239
Common Mode Voltage Range ... 238
Effects of a Reset ... 238
Gain Bandwidth Product ... 238
Input Offset Voltage ... 238
Leakage Current ... 238
Open Loop Gain ... 238
OPAxCON Register ... 239
OPCODE Field Descriptions ... 371
Operational Amplifier (OPA) Module ... 237
OPTION ... 381
OPTION Register ... 251
Oscillator Parameters ... 399
Oscillator Specifications ... 398
Oscillator Start-up Timer (OST)
Specifications ... 403

**P**

Packaging ... 439
Marking ... 439, 440, 441
PDIP Details ... 441
PCL Register ... 31
PCLATH Register ... 31
PCON Register ... 32
PIE1 Register ... 32
PIE2 Register ... 32
PIE3 Register ... 32
PIR1 Register ... 32
PIR2 Register ... 32
PIR3 Register ... 32
PORTA
Configuration Word w/ PORTA ... 247
LATA Register ... 33
PORTA Register ... 32
Specifications ... 401
PORTB
LATB Register ... 33
PORTB Register ... 32
PORTC
LATC Register ... 33
PORTC Register ... 32
Specifications ... 401
Power-up Timer (PWRT)
Specifications ... 403
Precision Internal Oscillator Parameters ... 399
Program Memory ... 19
Map and Stack (Banks 0-7)(PIC16(L)F1704) ... 25
Map and Stack (Banks 0-7)(PIC16(L)F1708) ... 26
Reading Memory ... 20
Programming, Device Instructions ... 371

**R**

RC1REG Register ... 33
RC1STA Register ... 33, 348
RCREG ... 344
Read-Modify-Write Operations ... 371
Registers
ADCON0 (ADC Control 0) ... 229
ADCON1 (ADC Control 1) ... 230
ADCON2 (ADC Control 2) ... 231
ADRESH (ADC Result High) with ADFM = 0) ... 232
ADRESH (ADC Result High) with ADFM = 1) ... 233

chanhvinh.com




ADRESL (ADC Result Low) with ADFM = 0) ..... 232
ADRESL (ADC Result Low) with ADFM = 1) ..... 233
BAUD1CON (Baud Rate Control) ..... 349
CCPTMRS (CCP/PWM Timers Control) ..... 269
CCPTMRS0 (PWM Timer Selection Control 0) ..... 269
CCPxCON (CCPx Control) ..... 280
CLCDATA (Data Output) ..... 220
CLCxCON (CLCx Control) ..... 213
CLCxGLS0 (Gate 1 Logic Select) ..... 216
CLCxGLS1 (Gate 2 Logic Select) ..... 217
CLCxGLS2 (Gate 3 Logic Select) ..... 218
CLCxGLS3 (Gate 4 Logic Select) ..... 219
CLCxPOL (Signal Polarity Control) ..... 214
CLCxSEL0 (Generic CLCx Data 0 Select) ..... 215
CLCxSEL1 (Generic CLCx Data 1 Select) ..... 215
CLCxSEL2 (Generic CLCx Data 2 Select) ..... 215
CLCxSEL3 (Generic CLCx Data 3 Select) ..... 215
Core Function, Summary ..... 31
DAC1CON0 ..... 244
DAC1CON1 ..... 244
OPAMP Control Registers (OPAxCON) ..... 239
OPTION_REG (OPTION) ..... 251
RC1REG ..... 355
RC1STA (Receive Status and Control) ..... 348
SP1BRGH ..... 350
SP1BRGL ..... 350
Special Function, Summary ..... 32
SSP1ADD (MSSP Address and Baud Rate, $I^2C$ Mode) ..... 334
SSP1CON1 (MSSP Control 1) ..... 331
SSP1CON2 (SSP Control 2) ..... 332
SSP1CON3 (SSP Control 3) ..... 333
SSP1MSK (SSP Mask) ..... 334
SSP1STAT (SSP Status) ..... 329
STATUS ..... 23
T1CON (Timer1 Control) ..... 261
T1GCON (Timer1 Gate Control) ..... 262
T2CON ..... 267
TX1STA (Transmit Status and Control) ..... 347
ZCDxCON ..... 247
RESET ..... 381
Revision History ..... 459

**S**

Software Simulator (MPLAB SIM) ..... 437
SP1BRG Register ..... 33
SP1BRGH Register ..... 350
SP1BRGL Register ..... 350
Special Event Trigger ..... 227
Special Function Registers (SFRs) ..... 32
SPI Mode (MSSP)
Associated Registers ..... 292
SPI Clock ..... 288
SSP1ADD Register ..... 34, 334
SSP1BUF Register ..... 34
SSP1CON Register ..... 34
SSP1CON1 Register ..... 331
SSP1CON2 Register ..... 332
SSP1CON3 Register ..... 333
SSP1MSK Register ..... 334
SSP1STAT Register ..... 34, 329
R/$\overline{W}$ Bit ..... 298
SSPOV ..... 319
SSPOV Status Flag ..... 319
Stack ..... 42
Accessing ..... 42
Reset ..... 44
Standard Operating Conditions ..... 386
STATUS Register ..... 23
SUBWFB ..... 383

**T**

T1CON Register ..... 32, 261
T1GCON Register ..... 262
T2CON (Timer2) Register ..... 267
Thermal Considerations ..... 396
Timer0 ..... 249
Associated Registers ..... 251
Operation ..... 249
Specifications ..... 405
Timer1 ..... 253
Associated registers ..... 263
Asynchronous Counter Mode ..... 255
Reading and Writing ..... 255
Clock Source Selection ..... 254
Interrupt ..... 257
Operation ..... 254
Operation During Sleep ..... 257
Prescaler ..... 255
Secondary Oscillator ..... 255
Specifications ..... 405
Timer1 Gate
Selecting Source ..... 255
TMR1H Register ..... 253
TMR1L Register ..... 253
Timer2
Associated registers ..... 268
Timer2/4/6 ..... 265
Timers
Timer1
T1CON ..... 261
T1GCON ..... 262
Timer2
T2CON ..... 267
Timing Diagrams
Acknowledge Sequence ..... 321
ADC Conversion ..... 409
Asynchronous Reception ..... 344
Asynchronous Transmission ..... 340
Asynchronous Transmission (Back to Back) ..... 341
Auto Wake-up Bit (WUE) During Normal Operation ..... 357
Auto Wake-up Bit (WUE) During Sleep ..... 357
Automatic Baud Rate Calibration ..... 355
Baud Rate Generator with Clock Arbitration ..... 314
BRG Reset Due to SDA Arbitration During Start Condition ..... 324
Brown-out Reset (BOR) ..... 404
Bus Collision During a Repeated Start Condition (Case 1) ..... 325
Bus Collision During a Repeated Start Condition (Case 2) ..... 325
Bus Collision During a Start Condition (SCL = 0) ..... 324
Bus Collision During a Stop Condition (Case 1) ..... 326
Bus Collision During a Stop Condition (Case 2) ..... 326
Bus Collision During Start Condition (SDA only) ..... 323
Bus Collision for Transmit and Acknowledge ..... 322
Capture/Compare/PWM (CCP) ..... 406
CLC Propagation Timing ..... 407
CLKOUT and I/O ..... 401
Clock Synchronization ..... 311
Clock Timing ..... 398
First Start Bit Timing ..... 315


 © 2013 Microchip Technology Inc.

chanhvinh.com




I²C Bus Data ..... 416
I²C Bus Start/Stop Bits ..... 416
I²C Master Mode (7 or 10-Bit Transmission) ..... 318
I²C Master Mode (7-Bit Reception) ..... 320
I²C Stop Condition Receive or Transmit Mode ..... 321
Repeated Start Condition ..... 316
Reset, WDT, OST and Power-up Timer ..... 402
Send Break Character Sequence ..... 358
SPI Master Mode (CKE = 1, SMP = 1) ..... 413
SPI Mode (Master Mode) ..... 288
SPI Slave Mode (CKE = 0) ..... 414
SPI Slave Mode (CKE = 1) ..... 414
Synchronous Reception (Master Mode, SREN) ..... 363
Synchronous Transmission ..... 360
Synchronous Transmission (Through TXEN) ..... 360
Timer0 and Timer1 External Clock ..... 404
Timer1 Incrementing Edge ..... 257
USART Synchronous Receive (Master/Slave) ..... 412
USART Synchronous Transmission (Master/Slave) ..... 412
Timing Diagrams and Specifications
PLL Clock ..... 400
Timing Parameter Symbology ..... 397
Timing Requirements
I²C Bus Data ..... 417
I2C Bus Start/Stop Bits ..... 416
SPI Mode ..... 415
TMR0 Register ..... 32
TMR1H Register ..... 32
TMR1L Register ..... 32
TRIS ..... 384
TRISA Register ..... 32
TRISB Register ..... 32
TRISC Register ..... 32
TX1REG Register ..... 33
TX1STA Register ..... 33, 347
BRGH Bit ..... 350
TXREG ..... 339


## U


USART
Synchronous Master Mode
Requirements, Synchronous Receive ..... 412
Requirements, Synchronous Transmission ..... 412
Timing Diagram, Synchronous Receive ..... 412
Timing Diagram, Synchronous Transmission ..... 412


## V


VREF. *SEE* ADC Reference Voltage


## W


Wake-up on Break ..... 356
Watchdog Timer (WDT)
Specifications ..... 403
WCOL ..... 314, 317, 319, 321
WCOL Status Flag ..... 314, 317, 319, 321
WWW Address ..... 467


## Z


ZCDxCON (Zero Cross Detection) Register ..... 247
Zero Cross Detection (ZCD)
Associated Registers ..... 247
Configuration Word w/ ZCD ..... 247
Specifications ..... 411
Zero-Cross Detection (ZCD) ..... 245

chanhvinh.com



**NOTES:**

chanhvinh.com

 © 2013 Microchip Technology Inc.

chanhvinh.com



## THE MICROCHIP WEB SITE

Microchip provides online support via our WWW site at www.microchip.com. This web site is used as a means to make files and information easily available to customers. Accessible by using your favorite Internet browser, the web site contains the following information:

- **Product Support** – Data sheets and errata, application notes and sample programs, design resources, user's guides and hardware support documents, latest software releases and archived software
- **General Technical Support** – Frequently Asked Questions (FAQ), technical support requests, online discussion groups, Microchip consultant program member listing
- **Business of Microchip** – Product selector and ordering guides, latest Microchip press releases, listing of seminars and events, listings of Microchip sales offices, distributors and factory representatives

## CUSTOMER CHANGE NOTIFICATION SERVICE

Microchip's customer notification service helps keep customers current on Microchip products. Subscribers will receive e-mail notification whenever there are changes, updates, revisions or errata related to a specified product family or development tool of interest.

To register, access the Microchip web site at www.microchip.com. Under "Support", click on "Customer Change Notification" and follow the registration instructions.

## CUSTOMER SUPPORT

Users of Microchip products can receive assistance through several channels:

- Distributor or Representative
- Local Sales Office
- Field Application Engineer (FAE)
- Technical Support

Customers should contact their distributor, representative or Field Application Engineer (FAE) for support. Local sales offices are also available to help customers. A listing of sales offices and locations is included in the back of this document.

**Technical support is available through the web site at: http://microchip.com/support**

chanhvinh.com

chanhvinh.com



**NOTES:**

chanhvinh.com


© 2013 Microchip Technology Inc.

chanhvinh.com



## PRODUCT IDENTIFICATION SYSTEM

To order or obtain information, e.g., on pricing or delivery, refer to the factory or the listed sales office.

| PART NO. | [X](1) | - | X | /XX | XXX |
|---|---|---|---|---|---|
| Device | Tape and Reel Option | | Temperature Range | Package | Pattern |

| | | |
|---|---|---|
| **Device:** | PIC16F1704, PIC16LF1704, PIC16F1708, PIC16LF1708 | |
| **Tape and Reel Option:** | Blank<br>T | = Standard packaging (tube or tray)<br>= Tape and Reel(1) |
| **Temperature Range:** | I<br>E | = -40°C to +85°C (Industrial)<br>= -40°C to +125°C (Extended) |
| **Package:(2)** | ML<br>P<br>SP<br>ST<br>SL<br>SO<br>SS | = QFN<br>= PDIP<br>= SPDIP<br>= TSSOP<br>= SOIC<br>= SOIC<br>= SSOP |
| **Pattern:** | QTP, SQTP, Code or Special Requirements (blank otherwise) | |

**Examples:**

a) PIC16LF1704- I/P
Industrial temperature
PDIP package

b) PIC16F1708- E/SS
Extended temperature,
SSOP package

**Note 1:** Tape and Reel identifier only appears in the catalog part number description. This identifier is used for ordering purposes and is not printed on the device package. Check with your Microchip Sales Office for package availability with the Tape and Reel option.

**2:** Small form-factor packaging options may be available. Please check www.microchip.com/packaging for small-form factor package availability, or contact your local Sales Office.

chanhvinh.com



**NOTES:**

chanhvinh.com

 © 2013 Microchip Technology Inc.

chanhvinh.com

**Note the following details of the code protection feature on Microchip devices:**

- Microchip products meet the specification contained in their particular Microchip Data Sheet.
- Microchip believes that its family of products is one of the most secure families of its kind on the market today, when used in the intended manner and under normal conditions.
- There are dishonest and possibly illegal methods used to breach the code protection feature. All of these methods, to our knowledge, require using the Microchip products in a manner outside the operating specifications contained in Microchip's Data Sheets. Most likely, the person doing so is engaged in theft of intellectual property.
- Microchip is willing to work with the customer who is concerned about the integrity of their code.
- Neither Microchip nor any other semiconductor manufacturer can guarantee the security of their code. Code protection does not mean that we are guaranteeing the product as "unbreakable."

Code protection is constantly evolving. We at Microchip are committed to continuously improving the code protection features of our products. Attempts to break Microchip's code protection feature may be a violation of the Digital Millennium Copyright Act. If such acts allow unauthorized access to your software or other copyrighted work, you may have a right to sue for relief under that Act.

Information contained in this publication regarding device applications and the like is provided only for your convenience and may be superseded by updates. It is your responsibility to ensure that your application meets with your specifications. MICROCHIP MAKES NO REPRESENTATIONS OR WARRANTIES OF ANY KIND WHETHER EXPRESS OR IMPLIED, WRITTEN OR ORAL, STATUTORY OR OTHERWISE, RELATED TO THE INFORMATION, INCLUDING BUT NOT LIMITED TO ITS CONDITION, QUALITY, PERFORMANCE, MERCHANTABILITY OR FITNESS FOR PURPOSE. Microchip disclaims all liability arising from this information and its use. Use of Microchip devices in life support and/or safety applications is entirely at the buyer's risk, and the buyer agrees to defend, indemnify and hold harmless Microchip from any and all damages, claims, suits, or expenses resulting from such use. No licenses are conveyed, implicitly or otherwise, under any Microchip intellectual property rights.

**Trademarks**

The Microchip name and logo, the Microchip logo, dsPIC, FlashFlex, KEELOQ, KEELOQ logo, MPLAB, PIC, PICmicro, PICSTART, PIC$^{32}$ logo, rfPIC, SST, SST Logo, SuperFlash and UNI/O are registered trademarks of Microchip Technology Incorporated in the U.S.A. and other countries.

FilterLab, Hampshire, HI-TECH C, Linear Active Thermistor, MTP, SEEVAL and The Embedded Control Solutions Company are registered trademarks of Microchip Technology Incorporated in the U.S.A.

Silicon Storage Technology is a registered trademark of Microchip Technology Inc. in other countries.

Analog-for-the-Digital Age, Application Maestro, BodyCom, chipKIT, chipKIT logo, CodeGuard, dsPICDEM, dsPICDEM.net, dsPICworks, dsSPEAK, ECAN, ECONOMONITOR, FanSense, HI-TIDE, In-Circuit Serial Programming, ICSP, Mindi, MiWi, MPASM, MPF, MPLAB Certified logo, MPLIB, MPLINK, mTouch, Omniscient Code Generation, PICC, PICC-18, PICDEM, PICDEM.net, PICkit, PICtail, REAL ICE, rfLAB, Select Mode, SQI, Serial Quad I/O, Total Endurance, TSHARC, UniWinDriver, WiperLock, ZENA and Z-Scale are trademarks of Microchip Technology Incorporated in the U.S.A. and other countries.

SQTP is a service mark of Microchip Technology Incorporated in the U.S.A.

GestIC and ULPP are registered trademarks of Microchip Technology Germany II GmbH & Co. KG, a subsidiary of Microchip Technology Inc., in other countries.

All other trademarks mentioned herein are property of their respective companies.

© 2013, Microchip Technology Incorporated, Printed in the U.S.A., All Rights Reserved.

Printed on recycled paper.

ISBN: 9781620774373

**QUALITY MANAGEMENT SYSTEM**
**CERTIFIED BY DNV**
**═ ISO/TS 16949 ═**

*Microchip received ISO/TS-16949:2009 certification for its worldwide headquarters, design and wafer fabrication facilities in Chandler and Tempe, Arizona; Gresham, Oregon and design centers in California and India. The Company's quality system processes and procedures are for its PIC® MCUs and dsPIC® DSCs, KEELOQ® code hopping devices, Serial EEPROMs, microperipherals, nonvolatile memory and analog products. In addition, Microchip's quality system for the design and manufacture of development systems is ISO 9001:2000 certified.*

chanhvinh.com

# Worldwide Sales and Service

## AMERICAS

**Corporate Office**
2355 West Chandler Blvd.
Chandler, AZ 85224-6199
Tel: 480-792-7200
Fax: 480-792-7277
Technical Support:
http://www.microchip.com/support
Web Address:
www.microchip.com

**Atlanta**
Duluth, GA
Tel: 678-957-9614
Fax: 678-957-1455

**Boston**
Westborough, MA
Tel: 774-760-0087
Fax: 774-760-0088

**Chicago**
Itasca, IL
Tel: 630-285-0071
Fax: 630-285-0075

**Cleveland**
Independence, OH
Tel: 216-447-0464
Fax: 216-447-0643

**Dallas**
Addison, TX
Tel: 972-818-7423
Fax: 972-818-2924

**Detroit**
Farmington Hills, MI
Tel: 248-538-2250
Fax: 248-538-2260

**Indianapolis**
Noblesville, IN
Tel: 317-773-8323
Fax: 317-773-5453

**Los Angeles**
Mission Viejo, CA
Tel: 949-462-9523
Fax: 949-462-9608

**Santa Clara**
Santa Clara, CA
Tel: 408-961-6444
Fax: 408-961-6445

**Toronto**
Mississauga, Ontario, Canada
Tel: 905-673-0699
Fax: 905-673-6509

## ASIA/PACIFIC

**Asia Pacific Office**
Suites 3707-14, 37th Floor
Tower 6, The Gateway
Harbour City, Kowloon
Hong Kong
Tel: 852-2401-1200
Fax: 852-2401-3431

**Australia - Sydney**
Tel: 61-2-9868-6733
Fax: 61-2-9868-6755

**China - Beijing**
Tel: 86-10-8569-7000
Fax: 86-10-8528-2104

**China - Chengdu**
Tel: 86-28-8665-5511
Fax: 86-28-8665-7889

**China - Chongqing**
Tel: 86-23-8980-9588
Fax: 86-23-8980-9500

**China - Hangzhou**
Tel: 86-571-2819-3187
Fax: 86-571-2819-3189

**China - Hong Kong SAR**
Tel: 852-2943-5100
Fax: 852-2401-3431

**China - Nanjing**
Tel: 86-25-8473-2460
Fax: 86-25-8473-2470

**China - Qingdao**
Tel: 86-532-8502-7355
Fax: 86-532-8502-7205

**China - Shanghai**
Tel: 86-21-5407-5533
Fax: 86-21-5407-5066

**China - Shenyang**
Tel: 86-24-2334-2829
Fax: 86-24-2334-2393

**China - Shenzhen**
Tel: 86-755-8864-2200
Fax: 86-755-8203-1760

**China - Wuhan**
Tel: 86-27-5980-5300
Fax: 86-27-5980-5118

**China - Xian**
Tel: 86-29-8833-7252
Fax: 86-29-8833-7256

**China - Xiamen**
Tel: 86-592-2388138
Fax: 86-592-2388130

**China - Zhuhai**
Tel: 86-756-3210040
Fax: 86-756-3210049

## ASIA/PACIFIC

**India - Bangalore**
Tel: 91-80-3090-4444
Fax: 91-80-3090-4123

**India - New Delhi**
Tel: 91-11-4160-8631
Fax: 91-11-4160-8632

**India - Pune**
Tel: 91-20-3019-1500

**Japan - Osaka**
Tel: 81-6-6152-7160
Fax: 81-6-6152-9310

**Japan - Tokyo**
Tel: 81-3-6880- 3770
Fax: 81-3-6880-3771

**Korea - Daegu**
Tel: 82-53-744-4301
Fax: 82-53-744-4302

**Korea - Seoul**
Tel: 82-2-554-7200
Fax: 82-2-558-5932 or
82-2-558-5934

**Malaysia - Kuala Lumpur**
Tel: 60-3-6201-9857
Fax: 60-3-6201-9859

**Malaysia - Penang**
Tel: 60-4-227-8870
Fax: 60-4-227-4068

**Philippines - Manila**
Tel: 63-2-634-9065
Fax: 63-2-634-9069

**Singapore**
Tel: 65-6334-8870
Fax: 65-6334-8850

**Taiwan - Hsin Chu**
Tel: 886-3-5778-366
Fax: 886-3-5770-955

**Taiwan - Kaohsiung**
Tel: 886-7-213-7828
Fax: 886-7-330-9305

**Taiwan - Taipei**
Tel: 886-2-2508-8600
Fax: 886-2-2508-0102

**Thailand - Bangkok**
Tel: 66-2-694-1351
Fax: 66-2-694-1350

## EUROPE

**Austria - Wels**
Tel: 43-7242-2244-39
Fax: 43-7242-2244-393

**Denmark - Copenhagen**
Tel: 45-4450-2828
Fax: 45-4485-2829

**France - Paris**
Tel: 33-1-69-53-63-20
Fax: 33-1-69-30-90-79

**Germany - Munich**
Tel: 49-89-627-144-0
Fax: 49-89-627-144-44

**Italy - Milan**
Tel: 39-0331-742611
Fax: 39-0331-466781

**Netherlands - Drunen**
Tel: 31-416-690399
Fax: 31-416-690340

**Spain - Madrid**
Tel: 34-91-708-08-90
Fax: 34-91-708-08-91

**UK - Wokingham**
Tel: 44-118-921-5869
Fax: 44-118-921-5820

08/20/13


© 2013 Microchip Technology Inc.