chanhvinh.com

PCI12000

3-Port PCIe Switch with Integrated Programmable I/O

Highlights

- PCIe Gen 4 (8GT/s) switch fabric
- Two 1-lane PCIe Gen 4 (8GT/s) expansion ports
- I/O Multiplexer (SMBus/SPI/UART/GPIO)

Target Applications

- Industrial PCs (PCIe 3.1 with 2 downstream ports)

Features

- Integrated PCI switching fabric
  - 512byte maximum payload size
- Integrated PCIe physical interfaces
  - 2-lane (2x8GT/s) upstream port
  - Two 1-lane (1x8GT/s) downstream ports
- Two external power supplies: +3.3V, +1.1V
- Comprehensive power management features
  - PCIe 3.1 LPSS (Low Power Sub States): L2 (with aux. power supply)
- Power and I/O
  - Integrated power-on reset circuit with configurable under/over voltage protection
  - Latch-up performance exceeds 150mA per EIA/JESD78, Class II
  - JEDEC Class 3A ESD performance
- UARTs
  - RS232/RS485
  - Auto-direction control
  - Standard and advanced speed support
  - Basic or comprehensive signal support
- Additional features
  - Multifunction GPIOs
  - Programmable pin multiplexer
  - Ability to use low-cost 25MHz crystal or clock for reduced BOM
  - SPI peripheral interface
  - SMBus target interface
  - SMBus controller interface
  - PVT Sensor
  - JTAG TAP
- Packaging
  - Pb-free RoHS compliant 72-pin VQFN package
- Environmental
  - Available in commercial and industrial grades

© 2023 Microchip Technology Inc. and its subsidiaries

chanhvinh.com

TO OUR VALUED CUSTOMERS

It is our intention to provide our valued customers with the best documentation possible to ensure successful use of your Microchip products. To this end, we will continue to improve our publications to better suit your needs. Our publications will be refined and enhanced as new volumes and updates are introduced.

If you have any questions or comments regarding this publication, please contact the Marketing Communications Department via E-mail at **docerrors@microchip.com**. We welcome your feedback.

Most Current Data Sheet

To obtain the most up-to-date version of this data sheet, please register at our Worldwide Web site at:

http://www.microchip.com

You can determine the version of a data sheet by examining its literature number found on the bottom outside corner of any page. The last character of the literature number is the version number, (e.g., DS30000000A is version A of document DS30000000).

Errata

An errata sheet, describing minor operational differences from the data sheet and recommended workarounds, may exist for current devices. As device/documentation issues become known to us, we will publish an errata sheet. The errata will specify the revision of silicon and revision of document to which it applies.

To determine if an errata sheet exists for a particular device, please check with one of the following:

- Microchip's Worldwide Web site; http://www.microchip.com
- Your local Microchip sales office (see last page)

When contacting a sales office, please specify which device, revision of silicon and data sheet (include -literature number) you are using.

Customer Notification System

Register on our web site at **www.microchip.com** to receive the most current information on all of our products.

© 2023 Microchip Technology Inc. and its subsidiaries

chanhvinh.com

1.0 INTRODUCTION

1.1 General Description

The Microchip PCI12000 is a single-chip 3-port PCIe switch with an integrated programmable I/O. The integrated PCIe physical interfaces provide a 2-lane (2x8GT/s) upstream port and two 1-lane (1x8GT/s) downstream ports. The device is targeted to address customer requests for higher bandwidth PCIe sub-systems within embedded applications. The maximum line rate is 8GT/s and it is certified against the GEN4 compliance program as defined in the PCIe Revision 4.x specifications. PCIe upstream can be delivered across a single or multiple lanes to accommodate best system architecture. The PCI12000 includes a compliant PCIe implementation from external facing physical interfaces through to switch fabric and endpoint controllers.

A programmable pin multiplexer is used to map I/O functions to package pins. This enables designers to work with either a default configuration or modify signals to best fit their application. Example signals include those associated with USB operation, through to GPIO or SMBus, which are accessed via a dedicated PCIe Endpoint Controller.

Though many clocks are required for PCI12000 operation, these are generated within an integrated clock farm. Only a single-ended 25MHz clock or crystal is required externally together with a PCIe reference clock.

PCI12000 software presentation is enabled using standard abstractions to major operating systems.

The PCI12000 is available in a 72-pin VQFN package in commercial (0°C to +70°C) or industrial (-40°C to +85°C) temperature ranges.

An internal block diagram of the PCI12000 is shown in Figure 1-1.

FIGURE 1-1: INTERNAL BLOCK DIAGRAM

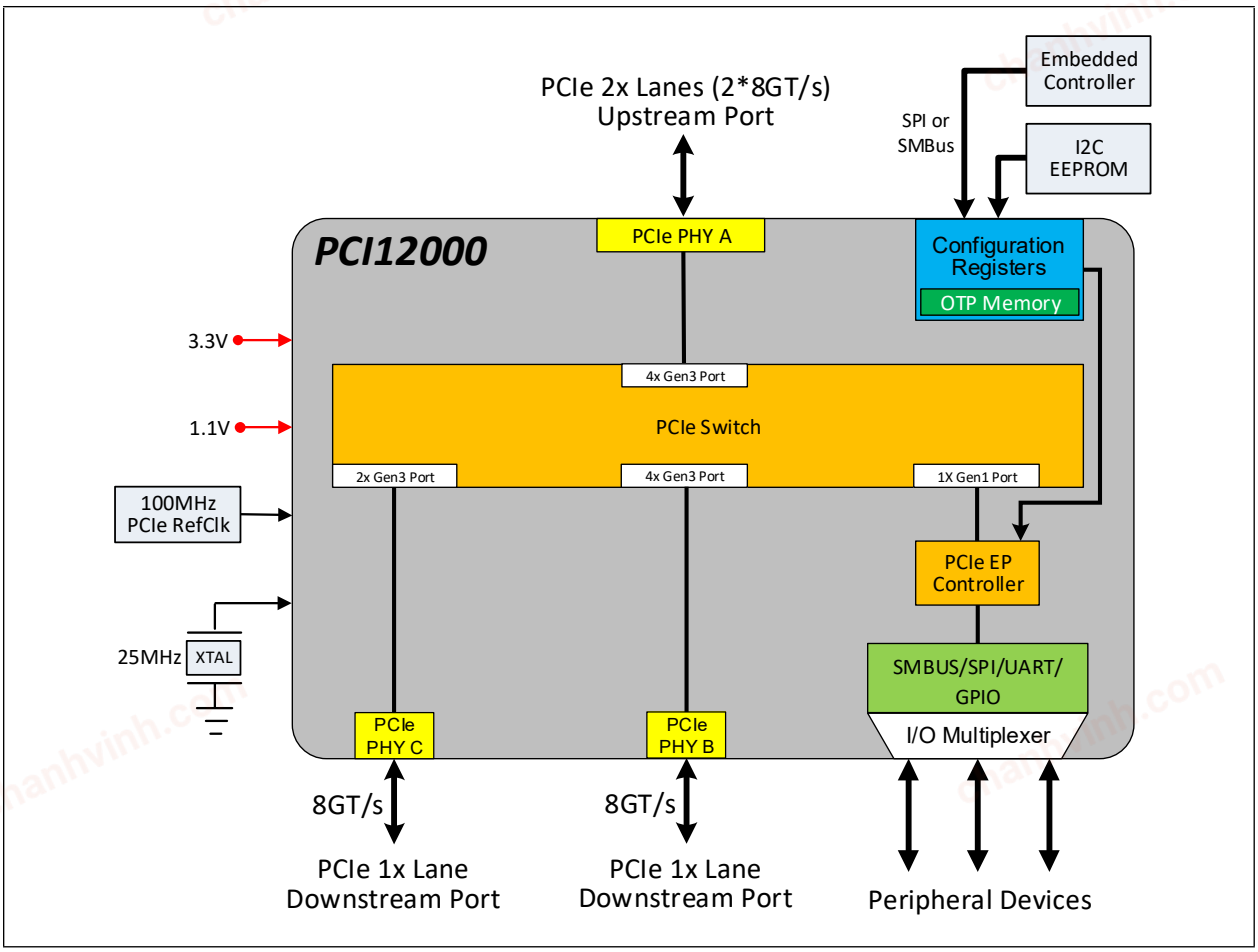

chanhvinh.com

2.0 PACKAGE INFORMATION

FIGURE 2-1: 72-VQFN PACKAGE (DRAWING)

72-Lead Very Thin Plastic Quad Flat, No Lead Package (ZUX) - 10x10x0.9 mm Body [VQFN] With 7.9 mm Exposed Pad and Stepped Wettable Flanks

Note: For the most current package drawings, please see the Microchip Packaging Specification located at http://www.microchip.com/packaging

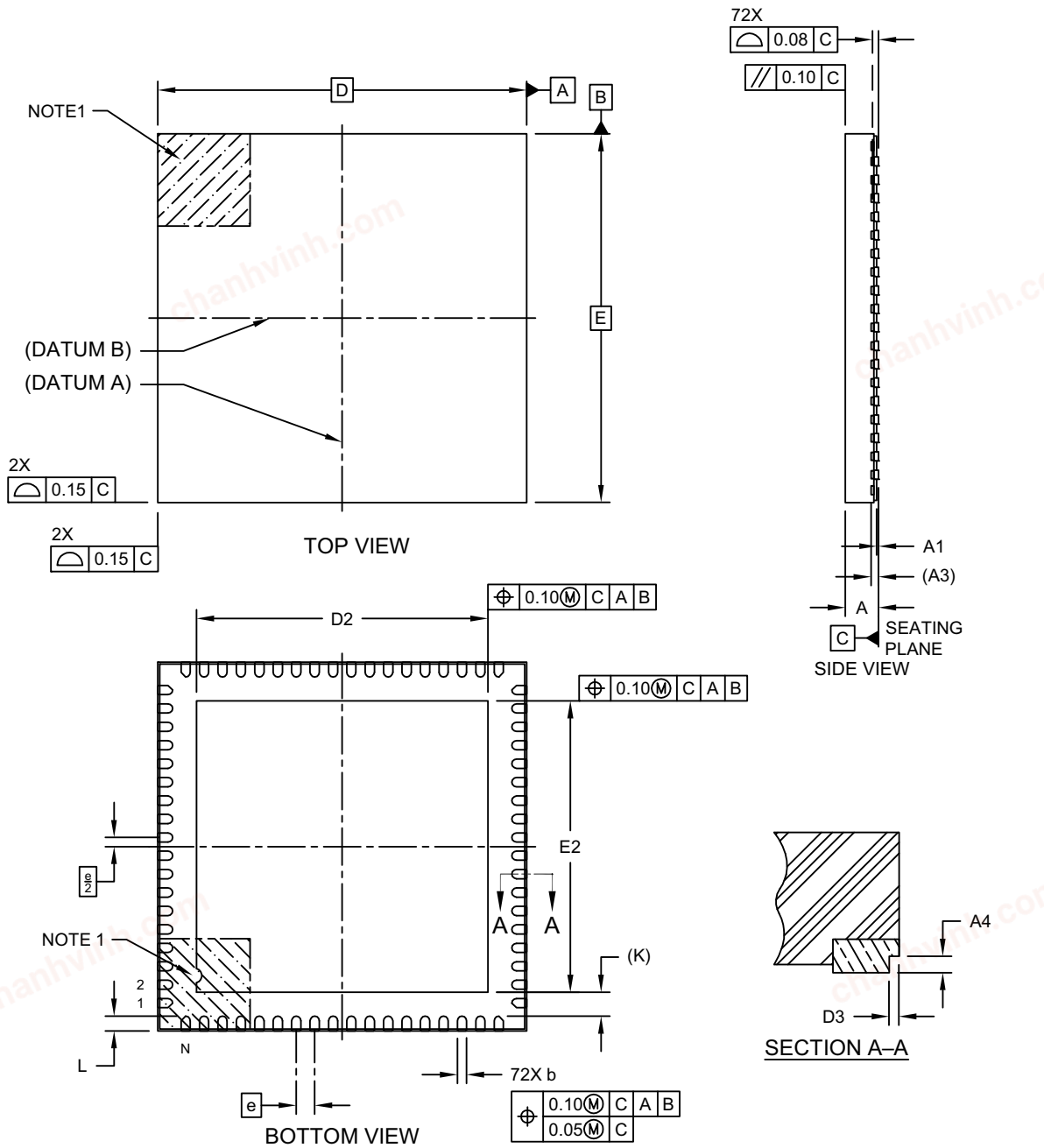

© 2023 Microchip Technology Inc. and its subsidiaries

chanhvinh.com

FIGURE 2-2: 72-VQFN PACKAGE (DIMENSIONS)

72-Lead Very Thin Plastic Quad Flat, No Lead Package (ZUX) - 10x10x0.9 mm Body [VQFN] With 7.9 mm Exposed Pad and Stepped Wettable Flanks

Note: For the most current package drawings, please see the Microchip Packaging Specification located at http://www.microchip.com/packaging

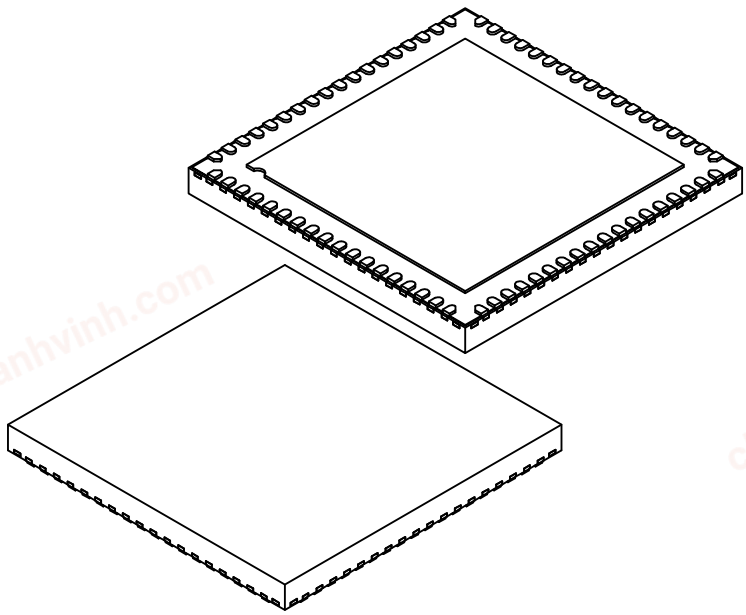

Units		MILLIMETERS		
Dimension Limits		MIN	NOM	MAX
Number of Terminals	N		72	
Pitch	e		0.50 BSC	
Overall Height	A	–	–	0.90
Standoff	A1	0.00	0.02	0.05
Terminal Thickness	A3		0.203 REF	
Overall Length	D		10.00 BSC	
Exposed Pad Length	D2	7.80	7.90	8.00
Overall Width	E		10.00 BSC	
Exposed Pad Width	E2	7.80	7.90	8.00
Terminal Width	b	0.18	0.25	0.30
Terminal Length	L	0.30	0.40	0.50
Terminal-to-Exposed-Pad	K		0.65 REF	
Wettable Flank Step Cut Length	D3	-	-	0.085
Wettable Flank Step Cut Height	A4	0.10	-	0.19

Notes:

1. Pin 1 visual index feature may vary, but must be located within the hatched area.
2. Package is saw singulated
3. Dimensioning and tolerancing per ASME Y14.5M
   BSC: Basic Dimension. Theoretically exact value shown without tolerances.
   REF: Reference Dimension, usually without tolerance, for information purposes only.

© 2023 Microchip Technology Inc. and its subsidiaries

chanhvinh.com

FIGURE 2-3: 72-VQFN PACKAGE (LAND PATTERN)

72-Lead Very Thin Plastic Quad Flat, No Lead Package (ZUX) - 10x10x0.9 mm Body [VQFN] With 7.9 mm Exposed Pad and Stepped Wettable Flanks

Note: For the most current package drawings, please see the Microchip Packaging Specification located at http://www.microchip.com/packaging

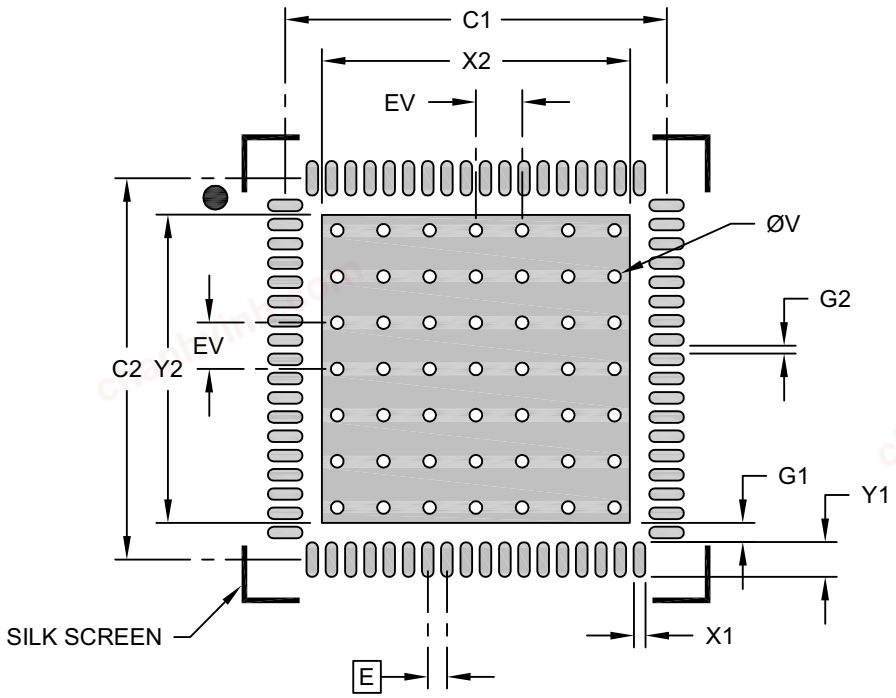

RECOMMENDED LAND PATTERN

Units		MILLIMETERS		
Dimension Limits		MIN	NOM	MAX
Contact Pitch	E		0.50 BSC	
Center Pad Width	X2			8.00
Center Pad Length	Y2			8.00
Contact Pad Spacing	C1		9.90	
Contact Pad Spacing	C2		9.90	
Contact Pad Width (Xnn)	X1			0.30
Contact Pad Length (Xnn)	Y1			0.90
Contact Pad to Center Pad (Xnn)	G1	0.50		
Contact Pad to Contact Pad (Xnn)	G2	0.20		
Thermal Via Diameter	V		0.33	
Thermal Via Pitch	EV		1.20	

Notes:

1. Dimensioning and tolerancing per ASME Y14.5M
   BSC: Basic Dimension. Theoretically exact value shown without tolerances.
2. For best soldering results, thermal vias, if used, should be filled or tented to avoid solder loss during reflow process

© 2023 Microchip Technology Inc. and its subsidiaries

chanhvinh.com

APPENDIX A: PRODUCT BRIEF REVISION HISTORY

TABLE A-1: REVISION HISTORY

Revision Level & Date	Section/Figure/Entry	Correction
DS00003794B (05-17-23)	Highlights	Updated cover bullets for clarity.
	Features	Removed the following items from Comprehensive Power Management features section: L1.off and L1.snooze.
	Section 1.1, General Description	Added the following sentence to the first paragraph: “The maximum line rate is 8GT/s and it is certified against the GEN4 compliance program as defined in the PCIe Revision 4.x specifications.”
	Figure 1-1	Updated port names for clarity.
DS00003794A (01-08-21)	All	Initial Release.

chanhvinh.com

chanhvinh.com

PRODUCT IDENTIFICATION SYSTEM

To order or obtain information, e.g., on pricing or delivery, refer to the factory or the listed sales office.

PART NO.	[X](1)	-	X	/	XXX
Device	Tape and Reel Option		Temperature Range		Package

Device:	PCI12000= 3-Port PCIe Switch with Prog.rammable I/O	
Tape and Reel Option:	Blank T	= Standard packaging (tray) = Tape and Reel (Note 1)
Temperature Range:	Blank I	= 0°C to +70°C (Commercial) = -40°C to +85°C (Industrial)
Package:	ZUX	= 72-pin VQFN

Examples:

a) PCI12000/ZUX
Tray, 0°C to +70°C, 72-pin VQFN

b) PCI12000T/ZUX
Tape & reel, 0°C to +70°C, 72-pin VQFN

c) PCI12000-I/ZUX
Tray, -40°C to +85°C, 72-pin VQFN

d) PCI12000T-I/ZUX
Tape & reel, -40°C to +85°C, 72-pin VQFN

Note 1: Tape and Reel identifier only appears in the catalog part number description. This identifier is used for ordering purposes and is not printed on the device package. Check with your Microchip Sales Office for package availability with the Tape and Reel option.

© 2023 Microchip Technology Inc. and its subsidiaries

chanhvinh.com

THE MICROCHIP WEB SITE

Microchip provides online support via our WWW site at www.microchip.com. This web site is used as a means to make files and information easily available to customers. Accessible by using your favorite Internet browser, the web site contains the following information:

- **Product Support** – Data sheets and errata, application notes and sample programs, design resources, user's guides and hardware support documents, latest software releases and archived software
- **General Technical Support** – Frequently Asked Questions (FAQ), technical support requests, online discussion groups, Microchip consultant program member listing
- **Business of Microchip** – Product selector and ordering guides, latest Microchip press releases, listing of seminars and events, listings of Microchip sales offices, distributors and factory representatives

CUSTOMER CHANGE NOTIFICATION SERVICE

Microchip's customer notification service helps keep customers current on Microchip products. Subscribers will receive e-mail notification whenever there are changes, updates, revisions or errata related to a specified product family or development tool of interest.

To register, access the Microchip web site at www.microchip.com. Under "Support", click on "Customer Change Notification" and follow the registration instructions.

CUSTOMER SUPPORT

Users of Microchip products can receive assistance through several channels:

- Distributor or Representative
- Local Sales Office
- Field Application Engineer (FAE)
- Technical Support

Customers should contact their distributor, representative or field application engineer (FAE) for support. Local sales offices are also available to help customers. A listing of sales offices and locations is included in the back of this document.

Technical support is available through the web site at: http://microchip.com/support

© 2023 Microchip Technology Inc. and its subsidiaries

chanhvinh.com

PCI12000

Note the following details of the code protection feature on Microchip products:

- Microchip products meet the specifications contained in their particular Microchip Data Sheet.
- Microchip believes that its family of products is secure when used in the intended manner, within operating specifications, and under normal conditions.
- Microchip values and aggressively protects its intellectual property rights. Attempts to breach the code protection features of Microchip product is strictly prohibited and may violate the Digital Millennium Copyright Act.
- Neither Microchip nor any other semiconductor manufacturer can guarantee the security of its code. Code protection does not mean that we are guaranteeing the product is "unbreakable" Code protection is constantly evolving. Microchip is committed to continuously improving the code protection features of our products.

This publication and the information herein may be used only with Microchip products, including to design, test, and integrate Microchip products with your application. Use of this information in any other manner violates these terms. Information regarding device applications is provided only for your convenience and may be superseded by updates. It is your responsibility to ensure that your application meets with your specifications. Contact your local Microchip sales office for additional support or, obtain additional support at https://www.microchip.com/en-us/support/design-help/client-support-services.

THIS INFORMATION IS PROVIDED BY MICROCHIP "AS IS". MICROCHIP MAKES NO REPRESENTATIONS OR WAR- RANTIES OF ANY KIND WHETHER EXPRESS OR IMPLIED, WRITTEN OR ORAL, STATUTORY OR OTHERWISE, RELATED TO THE INFORMATION INCLUD- ING BUT NOT LIMITED TO ANY IMPLIED WARRANTIES OF NON- INFRINGEMENT, MERCHANTABILITY, AND FITNESS FOR A PARTICU- LAR PURPOSE, OR WARRANTIES RELATED TO ITS CONDITION, QUALITY, OR PERFORMANCE.

IN NO EVENT WILL MICROCHIP BE LIABLE FOR ANY INDIRECT, SPECIAL, PUNITIVE, INCIDENTAL, OR CONSEQUENTIAL LOSS, DAM- AGE, COST, OR EXPENSE OF ANY KIND WHATSOEVER RELATED TO THE INFORMATION OR ITS USE, HOWEVER CAUSED, EVEN IF MICROCHIP HAS BEEN ADVISED OF THE POSSIBILITY OR THE DAMAGES ARE FORESEEABLE. TO THE FULLEST EXTENT ALLOWED BY LAW, MICROCHIP'S TOTAL LIABILITY ON ALL CLAIMS IN ANY WAY RELATED TO THE INFORMATION OR ITS USE WILL NOT EXCEED THE AMOUNT OF FEES, IF ANY, THAT YOU HAVE PAID DIRECTLY TO MICROCHIP FOR THE INFORMATION.

Use of Microchip devices in life support and/or safety applications is entirely at the buyer's risk, and the buyer agrees to defend, indemnify and hold harmless Microchip from any and all damages, claims, suits, or expenses resulting from such use. No licenses are conveyed, implicitly or otherwise, under any Microchip intellectual property rights unless otherwise stated.

Trademarks

he Microchip name and logo, the Microchip logo, Adaptec, AVR, AVR logo, AVR Freaks, BesTime, BitCloud, CryptoMemory, CryptoRF, dsPIC, flexPWR, HELDO, IGLOO, JukeBlox, KeeLoq, Kleer, LANCheck, LinkMD, maXStylus, maXTouch, MediaLB, megaAVR, Microsemi, Microsemi logo, MOST, MOST logo, MPLAB, OptoLyzer, PIC, picoPower, PICSTART, PIC32 logo, PolarFire, Prochip Designer, QTouch, SAM-BA, SenGenuity, SpyNIC, SST, SST Logo, SuperFlash, Symmetricom, SyncServer, Tachyon, TimeSource, tinyAVR, UNI/O, Vectron, and XMEGA are registered trademarks of Microchip Technology Incorporated in the U.S.A. and other countries.

AgileSwitch, APT, ClockWorks, The Embedded Control Solutions Company, EtherSynch, Flashtec, Hyper Speed Control, HyperLight Load, Libero, motorBench, mTouch, Powermite 3, Precision Edge, ProASIC, ProASIC Plus, ProASIC Plus logo, Quiet-Wire, SmartFusion, SyncWorld, Temux, TimeCesium, TimeHub, TimePictra, TimeProvider, TrueTime, and ZL are registered trademarks of Microchip Technology Incorporated in the U.S.A.

Adjacent Key Suppression, AKS, Analog-for-the-Digital Age, Any Capacitor, AnyIn, AnyOut, Augmented Switching, BlueSky, BodyCom, Clockstudio, CodeGuard, CryptoAuthentication, CryptoAutomotive, CryptoCompanion, CryptoController, dsPICDEM, dsPICDEM.net, Dynamic Average Matching, DAM, ECAN, Espresso T1S, EtherGREEN, GridTime, IdealBridge, In-Circuit Serial Programming, ICSP, INICnet, Intelligent Paralleling, IntelliMOS, Inter-Chip Connectivity, JitterBlocker, Knob-on-Display, KoD, maxCrypto, maxView, memBrain, Mindi, MiWi, MPASM, MPF, MPLAB Certified logo, MPLIB, MPLINK, MultiTRAK, NetDetach, Omniscient Code Generation, PICDEM, PICDEM.net, PICkit, PICtail, PowerSmart, PureSilicon, QMatrix, REAL ICE, Ripple Blocker, RTAX, RTG4, SAM-ICE, Serial Quad I/O, simpleMAP, SimpliPHY, SmartBuffer, SmartHLS, SMART-I.S., storClad, SQI, SuperSwitcher, SuperSwitcher II, Switchtec, SynchroPHY, Total Endurance, Trusted Time, TSHARC, USBCheck, VariSense, VectorBlox, VeriPHY, ViewSpan, WiperLock, XpressConnect, and ZENA are trademarks of Microchip Technology Incorporated in the U.S.A. and other countries.

SQTP is a service mark of Microchip Technology Incorporated in the U.S.A.

The Adaptec logo, Frequency on Demand, Silicon Storage Technology, and Symmcom are registered trademarks of Microchip Technology Inc. in other countries.

GestIC is a registered trademark of Microchip Technology Germany II GmbH & Co. KG, a subsidiary of Microchip Technology Inc., in other countries.

All other trademarks mentioned herein are property of their respective companies.

© 2023, Microchip Technology Incorporated and its subsidiaries.

All Rights Reserved.

ISBN: 9781668323878

For information regarding Microchip's Quality Management Systems, please visit www.microchip.com/quality.

© 2023 Microchip Technology Inc. and its subsidiaries

chanhvinh.com

Worldwide Sales and Service

AMERICAS

Corporate Office
2355 West Chandler Blvd.
Chandler, AZ 85224-6199
Tel: 480-792-7200
Fax: 480-792-7277
Technical Support:
http://www.microchip.com/support
Web Address:
www.microchip.com

Atlanta
Duluth, GA
Tel: 678-957-9614
Fax: 678-957-1455

Austin, TX
Tel: 512-257-3370

Boston
Westborough, MA
Tel: 774-760-0087
Fax: 774-760-0088

Chicago
Itasca, IL
Tel: 630-285-0071
Fax: 630-285-0075

Dallas
Addison, TX
Tel: 972-818-7423
Fax: 972-818-2924

Detroit
Novi, MI
Tel: 248-848-4000

Houston, TX
Tel: 281-894-5983

Indianapolis
Noblesville, IN
Tel: 317-773-8323
Fax: 317-773-5453
Tel: 317-536-2380

Los Angeles
Mission Viejo, CA
Tel: 949-462-9523
Fax: 949-462-9608
Tel: 951-273-7800

Raleigh, NC
Tel: 919-844-7510

New York, NY
Tel: 631-435-6000

San Jose, CA
Tel: 408-735-9110
Tel: 408-436-4270

Canada - Toronto
Tel: 905-695-1980
Fax: 905-695-2078

ASIA/PACIFIC

Australia - Sydney
Tel: 61-2-9868-6733

China - Beijing
Tel: 86-10-8569-7000

China - Chengdu
Tel: 86-28-8665-5511

China - Chongqing
Tel: 86-23-8980-9588

China - Dongguan
Tel: 86-769-8702-9880

China - Guangzhou
Tel: 86-20-8755-8029

China - Hangzhou
Tel: 86-571-8792-8115

China - Hong Kong SAR
Tel: 852-2943-5100

China - Nanjing
Tel: 86-25-8473-2460

China - Qingdao
Tel: 86-532-8502-7355

China - Shanghai
Tel: 86-21-3326-8000

China - Shenyang
Tel: 86-24-2334-2829

China - Shenzhen
Tel: 86-755-8864-2200

China - Suzhou
Tel: 86-186-6233-1526

China - Wuhan
Tel: 86-27-5980-5300

China - Xian
Tel: 86-29-8833-7252

China - Xiamen
Tel: 86-592-2388138

China - Zhuhai
Tel: 86-756-3210040

ASIA/PACIFIC

India - Bangalore
Tel: 91-80-3090-4444

India - New Delhi
Tel: 91-11-4160-8631

India - Pune
Tel: 91-20-4121-0141

Japan - Osaka
Tel: 81-6-6152-7160

Japan - Tokyo
Tel: 81-3-6880- 3770

Korea - Daegu
Tel: 82-53-744-4301

Korea - Seoul
Tel: 82-2-554-7200

Malaysia - Kuala Lumpur
Tel: 60-3-7651-7906

Malaysia - Penang
Tel: 60-4-227-8870

Philippines - Manila
Tel: 63-2-634-9065

Singapore
Tel: 65-6334-8870

Taiwan - Hsin Chu
Tel: 886-3-577-8366

Taiwan - Kaohsiung
Tel: 886-7-213-7830

Taiwan - Taipei
Tel: 886-2-2508-8600

Thailand - Bangkok
Tel: 66-2-694-1351

Vietnam - Ho Chi Minh
Tel: 84-28-5448-2100

EUROPE

Austria - Wels
Tel: 43-7242-2244-39
Fax: 43-7242-2244-393

Denmark - Copenhagen
Tel: 45-4485-5910
Fax: 45-4485-2829

Finland - Espoo
Tel: 358-9-4520-820

France - Paris
Tel: 33-1-69-53-63-20
Fax: 33-1-69-30-90-79

Germany - Garching
Tel: 49-8931-9700

Germany - Haan
Tel: 49-2129-3766400

Germany - Heilbronn
Tel: 49-7131-72400

Germany - Karlsruhe
Tel: 49-721-625370

Germany - Munich
Tel: 49-89-627-144-0
Fax: 49-89-627-144-44

Germany - Rosenheim
Tel: 49-8031-354-560

Israel - Ra'anana
Tel: 972-9-744-7705

Italy - Milan
Tel: 39-0331-742611
Fax: 39-0331-466781

Italy - Padova
Tel: 39-049-7625286

Netherlands - Drunen
Tel: 31-416-690399
Fax: 31-416-690340

Norway - Trondheim
Tel: 47-7288-4388

Poland - Warsaw
Tel: 48-22-3325737

Romania - Bucharest
Tel: 40-21-407-87-50

Spain - Madrid
Tel: 34-91-708-08-90
Fax: 34-91-708-08-91

Sweden - Gothenberg
Tel: 46-31-704-60-40

Sweden - Stockholm
Tel: 46-8-5090-4654

UK - Wokingham
Tel: 44-118-921-5800
Fax: 44-118-921-5820

© 2023 Microchip Technology Inc. and its subsidiaries