chanhvinh.com

MIC2940A/2941A

1.2A Low-Dropout Voltage Regulator

General Description

The MIC2940A and MIC2941A are “bulletproof” efficient voltage regulators with very low dropout voltage (typically 40mV at light loads and 350mV at 1A), and low quiescent current (240µA typical). The quiescent current of the MIC2940A increases only slightly in dropout, thus prolonging battery life. Key MIC2940A features include protection against reversed battery, fold-back current limiting, and automotive “load dump” protection (60V positive transient).

The MIC2940 is available in both fixed voltage (3.3V, 5V, and 12V) and adjustable voltage configurations. The MIC2940A-xx devices are three pin, fixed voltage regulators. A logic-compatible shutdown input is provided on the adjustable MIC2941A, which enables the regulator to be switched on and off.

Data sheets and support documentation can be found on Micrel’s web site at: www.micrel.com.

Features

- High output voltage accuracy
- Guaranteed 1.25A output
- Low quiescent current
- Low dropout voltage
- Extremely tight load and line regulation
- Very low temperature coefficient
- Current and thermal limiting
- Input can withstand –20V reverse battery and +60V positive transients
- Logic-controlled electronic shutdown
- Output programmable from 1.24V to 26V(MIC2941A)
- Available in TO-220, TO-263, TO-220-5, and TO-263-5 packages.

Applications

- Battery powered equipment
- Cellular telephones
- Laptop, notebook, and palmtop computers
- PCMCIA VCC and VPP regulation/switching
- Bar code scanners
- Automotive electronics
- SMPS post-regulator/ DC-to-DC modules
- Voltage reference
- High efficiency linear power supplies

Pin Configuration

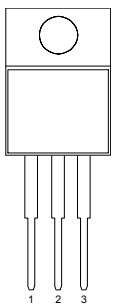

TO-220-3
(MIC2940A-xxBT/WT)

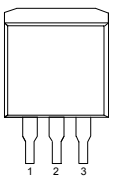

TO-263-3
(MIC2940A-xxBU/WU)

MIC2940A Pinout
1) Input
2) Ground
3) Output

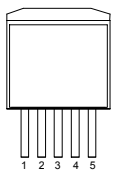

TO-263-5
(MIC2941ABU/WU)

MIC2941A Pinout
1) Adjust
2) Shutdown
3) Ground
4) Input
5) Output

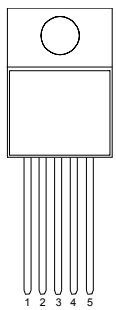

TO-220-5
(MIC2941ABT/WT)

The TAB is Ground on TO-220 and TO-263 packages

chanhvinh.com

Ordering Information

Part Number	Voltage	Temperature Range	Package	Lead Finish
MIC2940A-3.3BT	3.3V	–40° to +125°C	3-Pin TO-220	Standard
MIC2940A-3.3BU	3.3V	–40° to +125°C	3-Pin TO-263	Standard
MIC2940A-3.3WT	3.3V	–40° to +125°C	3-Pin TO-220	RoHS Comliant(1)
MIC2940A-3.3WU	3.3V	–40° to +125°C	3-Pin TO-263	RoHS Comliant(1)
MIC2940A-5.0BT	5V	–40° to +125°C	3-Pin TO-220	Standard
MIC2940A-5.0BU	5V	–40° to +125°C	3-Pin TO-263	Standard
MIC2940A-5.0WT	5V	–40° to +125°C	3-Pin TO-220	RoHS Comliant(1)
MIC2940A-5.0WU	5V	–40° to +125°C	3-Pin TO-263	RoHS Comliant(1)
MIC2940A-12BT	12V	–40° to +125°C	3-Pin TO-220	Standard
MIC2940A-12BU	12V	–40° to +125°C	3-Pin TO-263	Standard
MIC2940A-12WT	12V	–40° to +125°C	3-Pin TO-220	RoHS Comliant(1)
MIC2940A-12WU	12V	–40° to +125°C	3-Pin TO-263	RoHS Comliant(1)
MIC2941ABT	Adj.	–40° to +125°C	5-Pin TO-220	Standard
MIC2941ABU	Adj.	–40° to +125°C	5-Pin TO-263	Standard
MIC2941AWT	Adj.	–40° to +125°C	5-Pin TO-220	RoHS Comliant(1)
MIC2941AWU	Adj.	–40° to +125°C	5-Pin TO-263	RoHS Comliant(1)

Note:

1. RoHS compliant with ‘hot-melting solder’ exemption.

Schematic Diagram

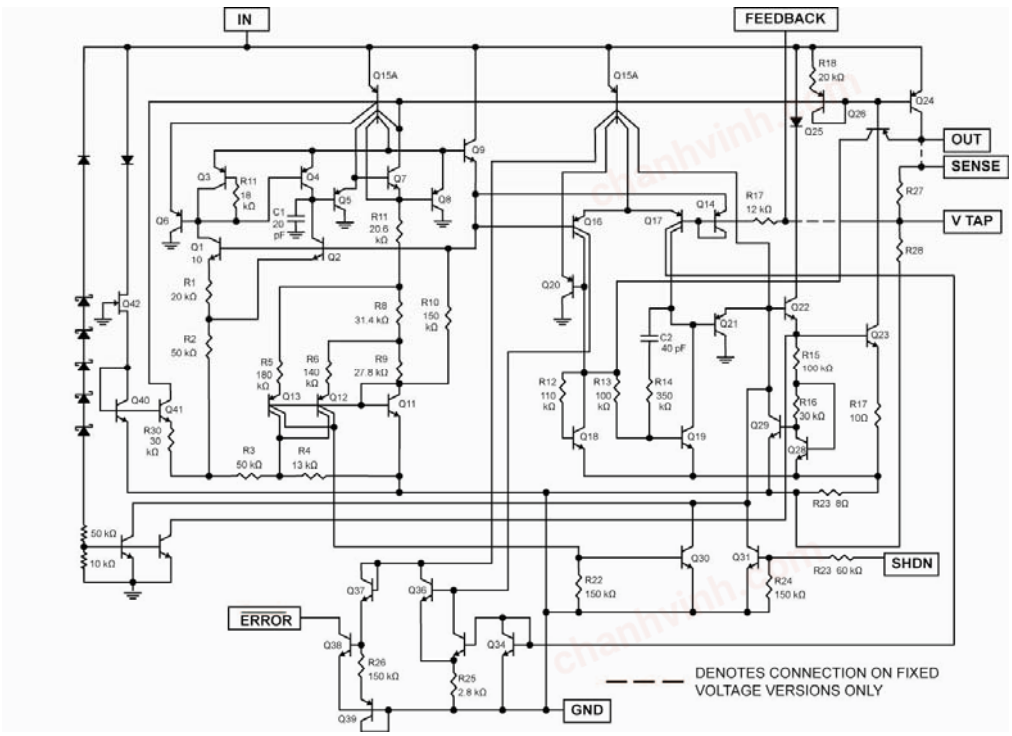

chanhvinh.com

Absolute Maximum Ratings

If Military/Aerospace specified devices are required, contact your local Micrel representative/distributor for availability and specifications

Power Dissipation **(Note 1)** ..... Internally Limited
Lead Temperature (soldering, 5 sec.) ..... 260°C
Storage Temperature ..... –65°C to +150°C
Operating Junction Temperature ..... –40°C to +125°C
TO-220 (θ_{JC}) ..... 2°C/W
TO-263 (θ_{JC}) ..... 2°C/W

Input Supply Voltage ..... –20V to +60V
Operating Input Supply Voltage ..... 2V† to 26V
Adjust Input Voltage (**Notes 9 and 10**) ..... –1.5V to +26V
Shutdown Input Voltage ..... –0.3V to +30V
Error Comparator Output Voltage ..... –0.3V to +30V

† Across the full operating temperature, the minimum input voltage range for full output current is 4.3V to 26V. Output will remain in-regulation at lower output voltages and low current loads down to an input of 2V at 25°C.

Electrical Characteristics

Limits in standard typeface are for T_J = 25°C and limits in **boldface** apply over the full operating temperature range. Unless otherwise specified, $V_{IN} = V_{OUT} + 1V$, I_L = 1000mA, C_L = 10µF. The MIC2941A is programmed to output 5V and has $V_{SHUTDOWN}$ 0.6V.

Symbol	Parameter	Condition	Min	Typ	Max	Units
V_O	Output Voltage Accuracy		–1		1	%
			–2		2	%
		5 mA ≤ I_L ≤ 1A	–2.5		2.5	%
$\frac{\Delta V_O}{\Delta T}$	Output Voltage Temperature Coefficient	**(Note 2)**		20	100	ppm/°C
$\frac{\Delta V_O}{V_O}$	Line Regulation	I_O = 10mA, (V_{OUT} + 1V) ≤ V_{IN} ≤ 26V		0.06	0.50	%
	Load Regulation	I_L = 5mA to 1.25A		0.04	0.16	%
		I_L = 5mA to 1A (**Note 3**)			0.20	%
$V_{IN} – V_O$	Dropout Voltage (**Note** 4)	I_L = 5mA		60	150	mV
					180	mV
		I_L = 250mA		200	250	mV
					320	mV
		I_L = 1000mA		350	450	mV
					600	mV
		I_L = 1250mA		400	600	mV
I_{GND}	Ground Pin Current (**Note 5**)	I_L = 5mA		240	500	µA
		I_L = 250mA		3	4.5	mA
					6	mA
		I_L = 1000mA		22	35	mA
					45	mA
		I_L = 1250mA		35	70	mA
I_{GNDDO}	Ground Pin Current at Dropout (**Note 5**)	V_{IN} = 0.5V less than designed V_{OUT} (V_{OUT} 3.3) I_L = 5mA		330	600	µA
I_{LIMIT}	Current Limit	V_{OUT} = 0V (**Note 6**)		1.6	3.5	A
$\frac{\Delta V_O}{\Delta P_D}$	Thermal Regulation	(**Note 7**)		0.05	0.2	%/W
e_n	Output Noise Voltage (10Hz to 100kHz) I_L = 100mA	C_L = 10µF		400		μV_{RMS}
		C_L = 33µF		260		μV_{RMS}

chanhvinh.com

Electrical Characteristics (MIC2941A Only)

Parameter	Condition	Min	Typ	Max	Units
Reference Voltage	(**Note 8**)	1.223 1.210 1.204	1.235	1.247 1.260 1.266	V V V
Adjust Pin Bias Current			20	40 60	nA nA
Reference Voltage Temperature Coefficient			20		ppm/°C
Adjust Pin Bias Current Temperature Coefficient			0.1		nA/°C
Shutdown Input					
Input Logic Voltage	Low (ON) High (OFF)	 2.0	1.3 0.7		V V V
Shutdown Pin Input Current	$V_{SHUTDOWN}$ = 2.4V		30	50 100	µA µA
	$V_{SHUTDOWN}$ = 26V		450	600 750	µA µA
Regulator Output Current in Shutdown	(**Note 10**)		3	30 60	µA µA

Notes:

1. Absolute maximum ratings indicate limits beyond which damage to the component may occur. Electrical specifications do not apply when operating the device outside of its rated operating conditions. The maximum allowable power dissipation is a function of the maximum junction temperature, $T_{J(MAX)}$, the junction-to-ambient thermal resistance, θ_{JA}, and the ambient temperature, T_A. The maximum allowable power dissipation at any ambient temperature is calculated using: $P_{(MAX)} = (T_{J(MAX)} – T_A) / \theta_{JA}$. Exceeding the maximum allowable power dissipation will result in excessive die temperature, and the regulator will go into thermal shutdown.
2. Output voltage temperature coefficient is defined as the worst case voltage change divided by the total temperature range.
3. Regulation is measured at constant junction temperature using low duty cycle pulse testing. Changes in output voltage due to heating effects are covered by the thermal regulation specification.
4. Dropout Voltage is defined as the input to output differential at which the output voltage drops 100 mV below its nominal value measured at 1V differential. At low values of programmed output voltage, the minimum input supply voltage of 4.3V over temperature must be taken into account.
5. Ground pin current is the regulator quiescent current. The total current drawn from the source is the sum of the load current plus the ground pin current.
6. The MIC2940A features fold-back current limiting. The short circuit (V_{OUT} = 0V) current limit is less than the maximum current with normal output voltage.
7. Thermal regulation is defined as the change in output voltage at a time T after a change in power dissipation is applied, excluding load or line regulation effects. Specifications are for a 200mA load pulse at V_{IN} = 20V (a 4W pulse) for T = 10ms.
8. $V_{REF} \le V_{OUT} \le (V_{IN} – 1\ V)$, $4.3V \le V_{IN}$ 26V, $5mA < I_L \le 1.25A$, $T_J \le T_{J(MAX)}$.
9. Circuit of Figure 3 with R1 ≥ 150k Ω. $V_{SHUTDOWN} \ge 2$ V and $V_{IN} \le 26$ V, V_{OUT} = 0.
10. When used in dual supply systems where the regulator load is returned to a negative supply, the output voltage must be diode clamped to ground.
11. Maximum positive supply voltage of 60 V must be of limited duration (< 100 ms) and duty cycle (≤ 1%). The maximum continuous supply voltage is 26V.

chanhvinh.com

Typical Characteristics

Dropout Voltage vs. Output Current

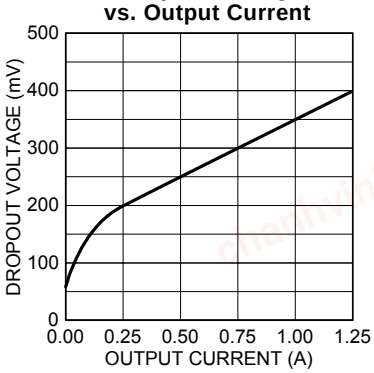

Dropout Voltage vs. Temperature

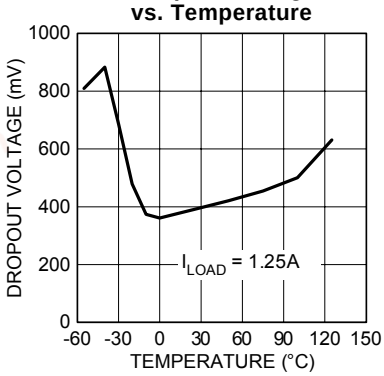

Dropout Characteristics

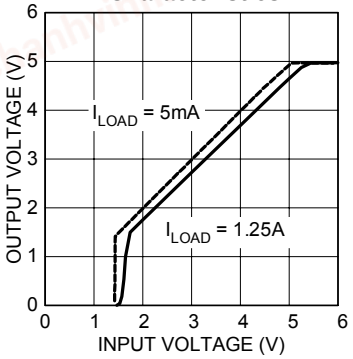

Ground Current vs. Output Current

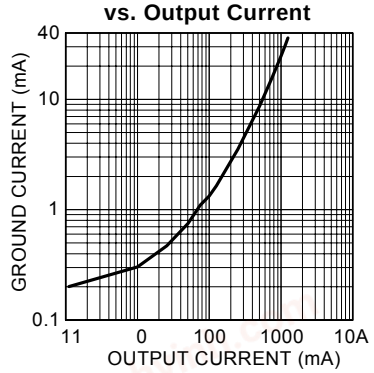

Ground Current vs. Supply Voltage

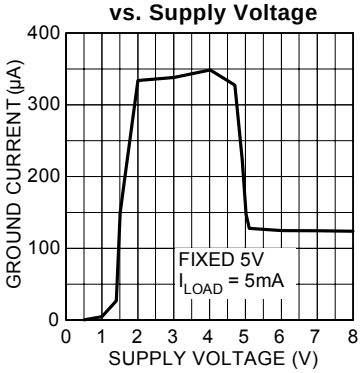

Ground Current vs. Supply Voltage

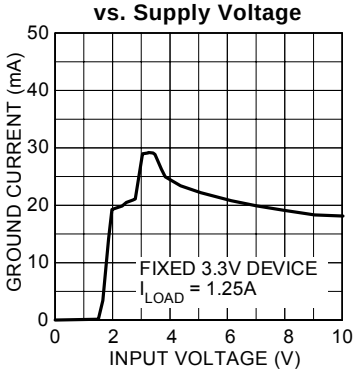

Ground Current vs. Temperature

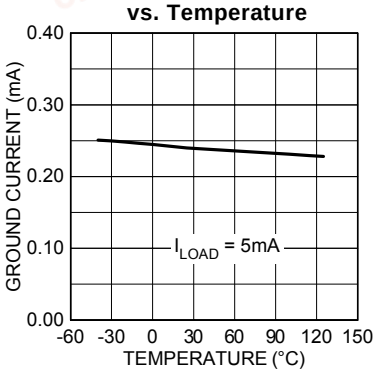

Ground Current vs. Temperature

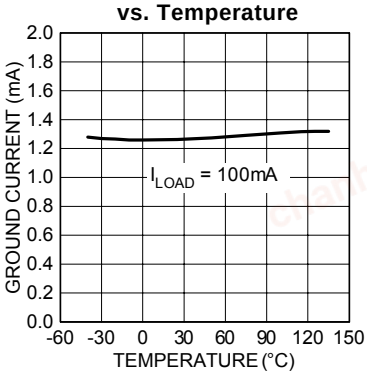

Ground Current vs. Temperature

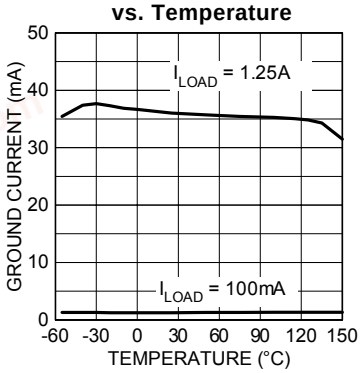

Fixed 3.3V Output Voltage vs. Temperature

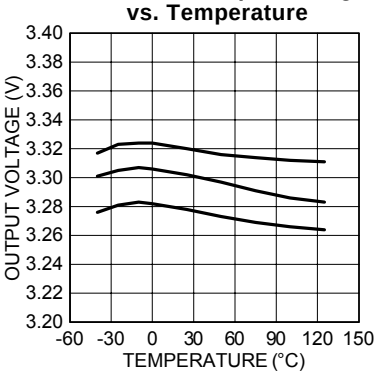

Short Circuit and Maximum Current vs. Temperature

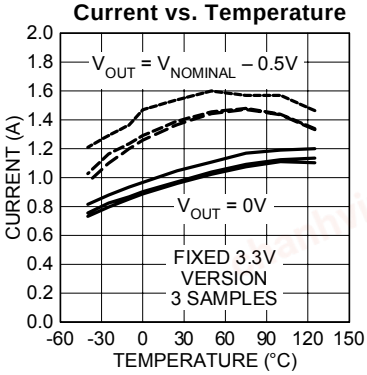

Ground Current vs. Input Voltage

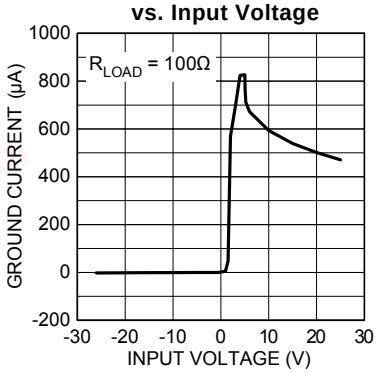

chanhvinh.com

Typical Characteristics (continued)

MIC29401/2 Shutdown Current vs. Temperature

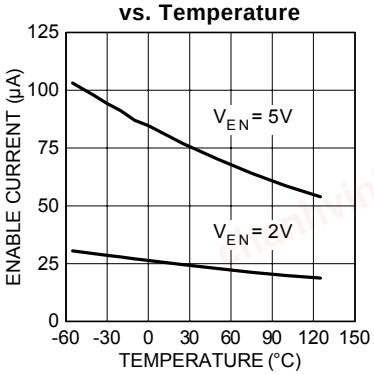

Load Transient

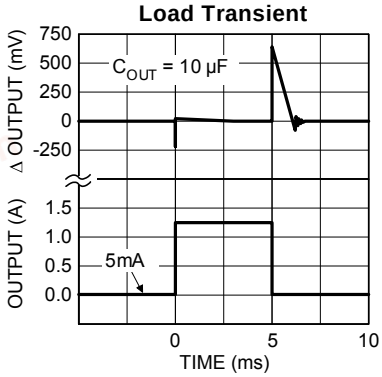

Load Transient

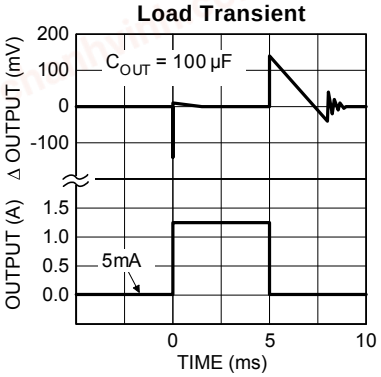

MIC29402/3 Adjust Pin Current vs. Temperature

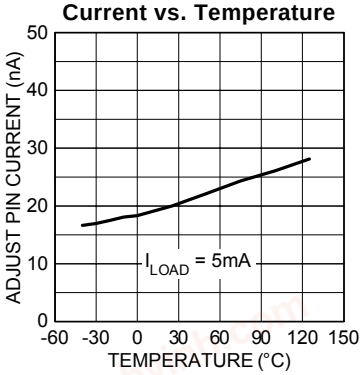

Line Transient

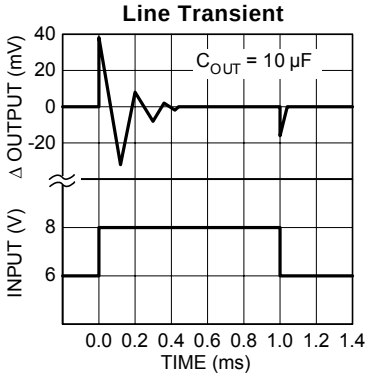

Line Transient

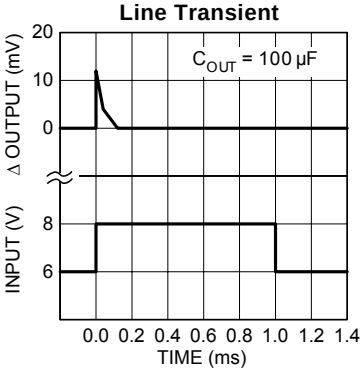

Output Impedance vs. Frequency

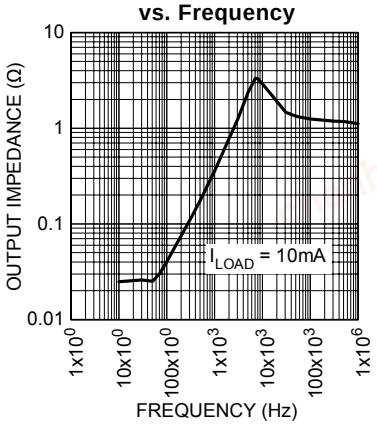

chanhvinh.com

Application Information

External Capacitors

A 10µF (or greater) capacitor is required between the MIC2940A output and ground to prevent oscillations due to instability. Most types of tantalum or aluminum electrolytics will be adequate; film types will work, but are costly and therefore not recommended. Many aluminum electrolytics have electrolytes that freeze at about –30°C, so solid tantalums are recommended for operation below –25°C. The important parameters of the capacitor are an effective series resistance of about 5Ω or less and a resonant frequency above 500kHz. The value of this capacitor may be increased without limit.

At lower values of output current, less output capacitance is required for output stability. The capacitor can be reduced to 3.3µF for current below 100mA or 2.2µF for currents below 10mA. Adjusting the MIC2941A to voltages below 5V runs the error amplifier at lower gains so that more output capacitance is needed. For the worst-case situation of a 1.25A load at 1.23V output (Output shorted to Adjust) a 22µF (or greater) capacitor should be used.

The MIC2940A will remain stable and in regulation with load currents ranging from 5mA on up to the full 1.25A rating. The external resistors of the MIC2941A version may be scaled to draw this minimum load current.

A 0.22µF capacitor should be placed from the MIC2940A input to ground if there is more than 10 inches of wire between the input and the AC filter capacitor or if a battery is used as the input.

Programming the Output Voltage (MIC2941A)

The MIC2941A may be programmed for any output voltage between its 1.235V reference and its 26V maximum rating. An external pair of resistors is required, as shown in Figure 3.

$$V_{OUT} = V_{REF} \times \{ 1 + R_1/R_2 \} - |I_{FB}| R_1$$

where V_{REF} is the nominal 1.235 reference voltage and I_{FB} is the Adjust pin bias current, nominally 20nA. The minimum recommended load current of 1µA forces an upper limit of 1.2MΩ on the value of R_2, if the regulator must work with no load (a condition often found in CMOS in standby), I_{FB} will produce a –2% typical error in V_{OUT} which may be eliminated at room temperature by trimming R_1. For better accuracy, choosing R_2 = 100kΩ reduces this error to 0.17% while increasing the resistor program current to 12µA. Since the MIC2941A typically draws 100µA at no load with SHUTDOWN open-circuited, this is a negligible addition.

Reducing Output Noise

In reference applications it may be advantageous to reduce the AC noise present at the output. One method is to reduce the regulator bandwidth by increasing the size of the output capacitor. This is relatively inefficient, as increasing the capacitor from 1µF to 220µF only decreases the noise from 430µV to 160µV_{RMS} for a 100kHz bandwidth at 5V output. Noise can be reduced by a factor of four with the MIC2941A by adding a bypass capacitor across R_1. Pick

$$C_{BYPASS} \cong \frac{1}{2\pi R_1 200Hz}$$

or about 0.01µF. When doing this, the output capacitor must be increased to 22µF to maintain stability. These changes reduce the output noise from 430µV to 100µV_{RMS} for a 100kHz bandwidth at 5V output. With the bypass capacitor added, noise no longer scales with output voltage so that improvements are more dramatic at higher output voltages.

Automotive Applications

The MIC2940A is ideally suited for automotive applications for a variety of reasons. It will operate over a wide range of input voltages with very low dropout voltages (40mV at light loads), and very low quiescent currents (240µA typical). These features are necessary for use in battery powered systems, such as automobiles. It is a “bulletproof” device with the ability to survive both reverse battery (negative transients up to 20V below ground), and load dump (positive transients up to 60V) conditions. A wide operating temperature range with low temperature coefficients is yet another reason to use these versatile regulators in automotive designs.

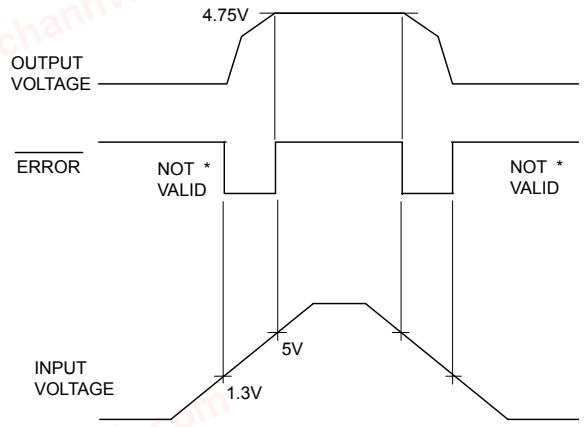

Figure 1. ERROR Output Timing

chanhvinh.com

Typical Applications

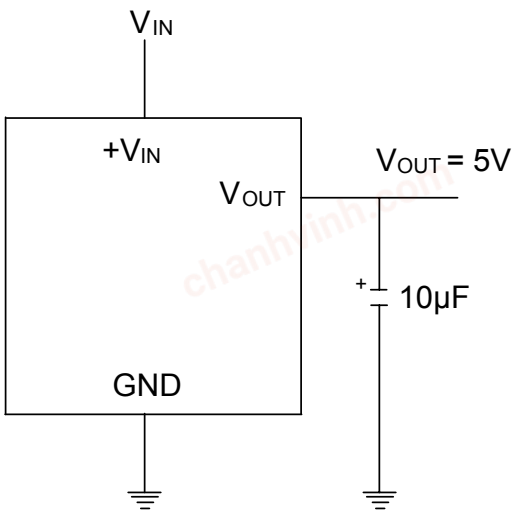

Figure 2. MIC2940A-5.0 Fixed +5V Regulator

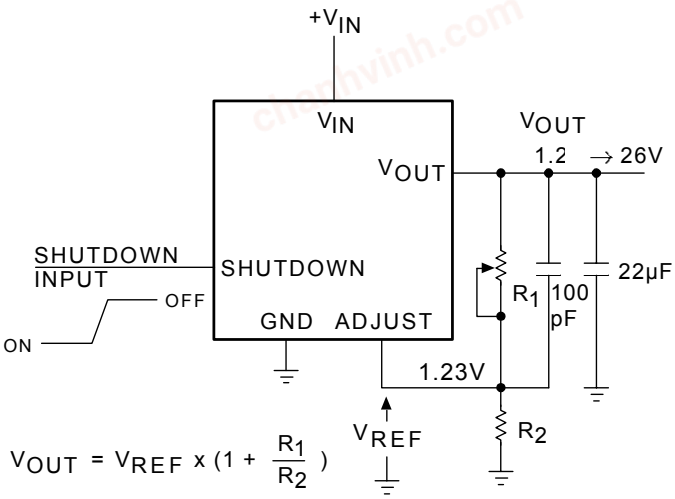

Figure 3. MIC2941A Adjustable Regulator

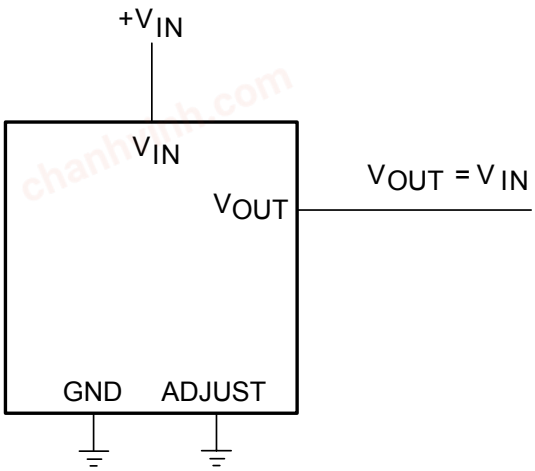

* Minimum Input-Output Voltage Ranges from 40mV to 400mV, depending on Load Current.

Figure 4. MIC2941A Wide Input Voltage Range Current Limit

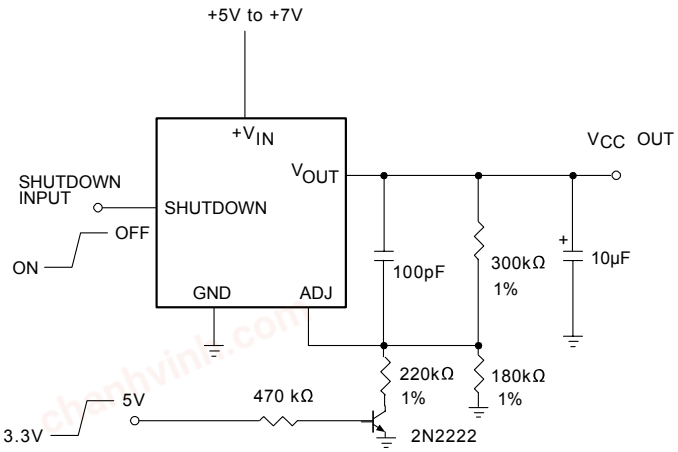

Adjust Pin Low = Enable Output. Q1 ON = 3.3V, Q1 OFF = 5.0V.

Figure 5. MIC2941A 5.0V or 3.3V Selectable Regulator with Shutdown

chanhvinh.com

Package Information

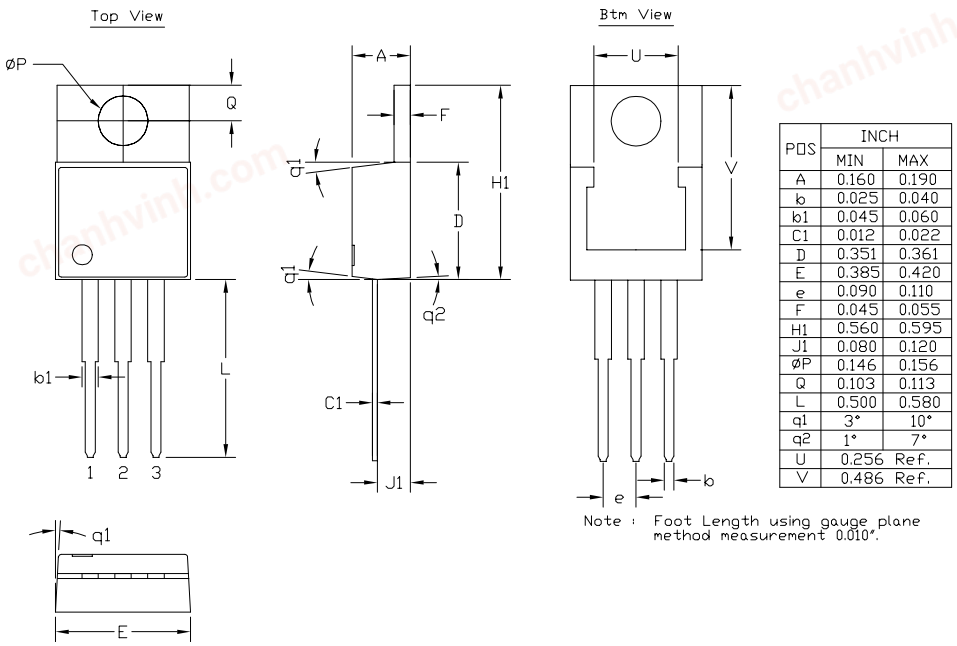

POS	INCH	
	MIN	MAX
A	0.160	0.190
b	0.025	0.040
b1	0.045	0.060
C1	0.012	0.022
D	0.351	0.361
E	0.385	0.420
e	0.090	0.110
F	0.045	0.055
H1	0.560	0.595
J1	0.080	0.120
ØP	0.146	0.156
Q	0.103	0.113
L	0.500	0.580
q1	3°	10°
q2	1°	7°
U	0.256 Ref.	
V	0.486 Ref.	

3-Pin TO-220 (T)

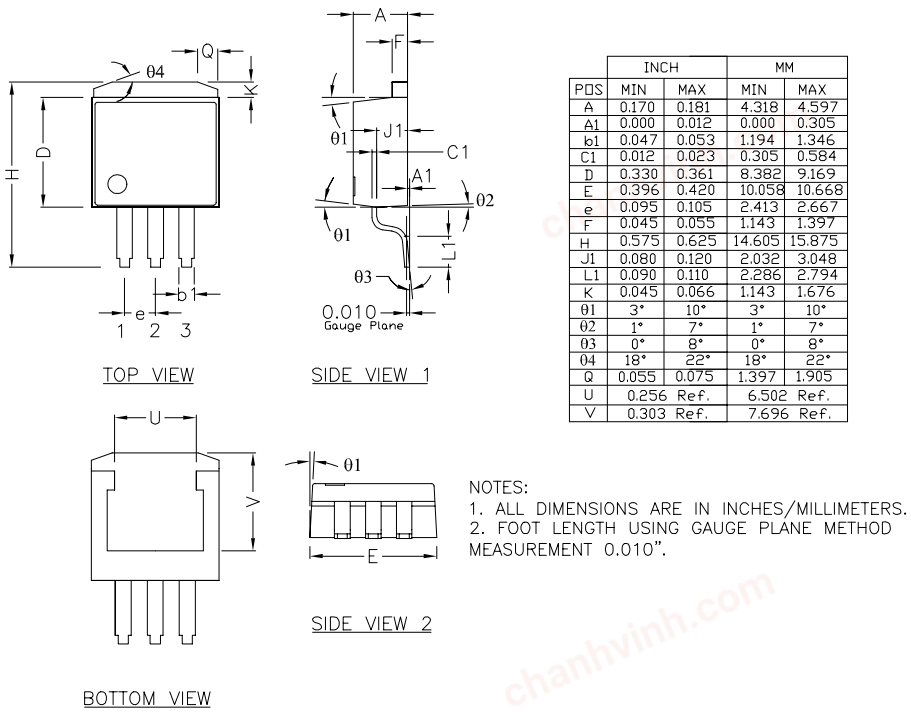

	INCH		MM	
POS	MIN	MAX	MIN	MAX
A	0.170	0.181	4.318	4.597
A1	0.000	0.012	0.000	0.305
b1	0.047	0.053	1.194	1.346
C1	0.012	0.023	0.305	0.584
D	0.330	0.361	8.382	9.169
E	0.396	0.420	10.058	10.668
e	0.095	0.105	2.413	2.667
F	0.045	0.055	1.143	1.397
H	0.575	0.625	14.605	15.875
J1	0.080	0.120	2.032	3.048
L1	0.090	0.110	2.286	2.794
K	0.045	0.066	1.143	1.676
θ1	3°	10°	3°	10°
θ2	1°	7°	1°	7°
θ3	0°	8°	0°	8°
θ4	18°	22°	18°	22°
Q	0.055	0.075	1.397	1.905
U	0.256 Ref.		6.502 Ref.	
V	0.303 Ref.		7.696 Ref.	

3-Pin TO-263 (U)

chanhvinh.com

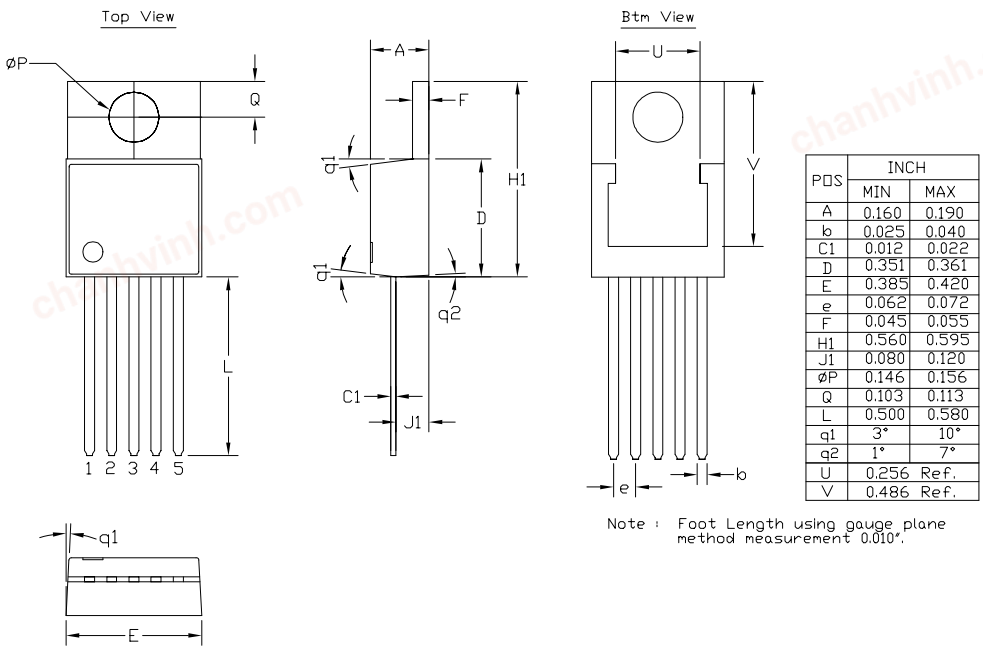

POS	INCH	
	MIN	MAX
A	0.160	0.190
b	0.025	0.040
C1	0.012	0.022
D	0.351	0.361
E	0.385	0.420
e	0.062	0.072
F	0.045	0.055
H1	0.560	0.595
J1	0.080	0.120
ØP	0.146	0.156
Q	0.103	0.113
L	0.500	0.580
q1	3°	10°
q2	1°	7°
U	0.256 Ref.	
V	0.486 Ref.	

Note : Foot Length using gauge plane method measurement 0.010".

5-Pin TO-220 (T)

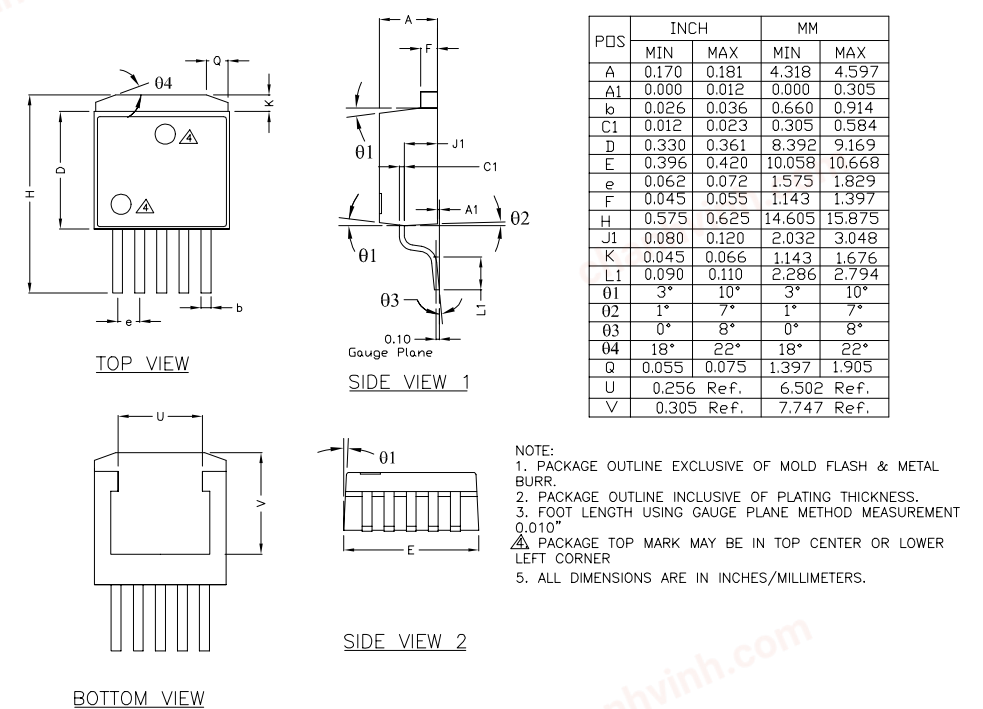

POS	INCH		MM	
	MIN	MAX	MIN	MAX
A	0.170	0.181	4.318	4.597
A1	0.000	0.012	0.000	0.305
b	0.026	0.036	0.660	0.914
C1	0.012	0.023	0.305	0.584
D	0.330	0.361	8.392	9.169
E	0.396	0.420	10.058	10.668
e	0.062	0.072	1.575	1.829
F	0.045	0.055	1.143	1.397
H	0.575	0.625	14.605	15.875
J1	0.080	0.120	2.032	3.048
K	0.045	0.066	1.143	1.676
L1	0.090	0.110	2.286	2.794
θ1	3°	10°	3°	10°
θ2	1°	7°	1°	7°
θ3	0°	8°	0°	8°
θ4	18°	22°	18°	22°
Q	0.055	0.075	1.397	1.905
U	0.256 Ref.		6.502 Ref.	
V	0.305 Ref.		7.747 Ref.	

NOTE:
1. PACKAGE OUTLINE EXCLUSIVE OF MOLD FLASH & METAL BURR.
2. PACKAGE OUTLINE INCLUSIVE OF PLATING THICKNESS.
3. FOOT LENGTH USING GAUGE PLANE METHOD MEASUREMENT 0.010"
4. ⚠ PACKAGE TOP MARK MAY BE IN TOP CENTER OR LOWER LEFT CORNER
5. ALL DIMENSIONS ARE IN INCHES/MILLIMETERS.

5-Pin TO-263 (U)

chanhvinh.com

MICREL, INC. 2180 FORTUNE DRIVE SAN JOSE, CA 95131 USA
TEL +1 (408) 944-0800 FAX +1 (408) 474-1000 WEB http://www.micrel.com

The information furnished by Micrel in this data sheet is believed to be accurate and reliable. However, no responsibility is assumed by Micrel for its use. Micrel reserves the right to change circuitry and specifications at any time without notification to the customer.

Micrel Products are not designed or authorized for use as components in life support appliances, devices or systems where malfunction of a product can reasonably be expected to result in personal injury. Life support devices or systems are devices or systems that (a) are intended for surgical implant into the body or (b) support or sustain life, and whose failure to perform can be reasonably expected to result in a significant injury to the user. A Purchaser's use or sale of Micrel Products for use in life support appliances, devices or systems is a Purchaser's own risk and Purchaser agrees to fully indemnify Micrel for any damages resulting from such use or sale.

© 2004 Micrel, Incorporated.