chanhvinh.com



MCP73X23
Lithium Iron Phosphate ($LiFePO_4$)
Battery Charger Evaluation Board
User's Guide

© 2009 Microchip Technology Inc.

chanhvinh.com

Note the following details of the code protection feature on Microchip devices:

- Microchip products meet the specification contained in their particular Microchip Data Sheet.
- Microchip believes that its family of products is one of the most secure families of its kind on the market today, when used in the intended manner and under normal conditions.
- There are dishonest and possibly illegal methods used to breach the code protection feature. All of these methods, to our knowledge, require using the Microchip products in a manner outside the operating specifications contained in Microchip's Data Sheets. Most likely, the person doing so is engaged in theft of intellectual property.
- Microchip is willing to work with the customer who is concerned about the integrity of their code.
- Neither Microchip nor any other semiconductor manufacturer can guarantee the security of their code. Code protection does not mean that we are guaranteeing the product as "unbreakable."

Code protection is constantly evolving. We at Microchip are committed to continuously improving the code protection features of our products. Attempts to break Microchip's code protection feature may be a violation of the Digital Millennium Copyright Act. If such acts allow unauthorized access to your software or other copyrighted work, you may have a right to sue for relief under that Act.

Information contained in this publication regarding device applications and the like is provided only for your convenience and may be superseded by updates. It is your responsibility to ensure that your application meets with your specifications. MICROCHIP MAKES NO REPRESENTATIONS OR WARRANTIES OF ANY KIND WHETHER EXPRESS OR IMPLIED, WRITTEN OR ORAL, STATUTORY OR OTHERWISE, RELATED TO THE INFORMATION, INCLUDING BUT NOT LIMITED TO ITS CONDITION, QUALITY, PERFORMANCE, MERCHANTABILITY OR FITNESS FOR PURPOSE. Microchip disclaims all liability arising from this information and its use. Use of Microchip devices in life support and/or safety applications is entirely at the buyer's risk, and the buyer agrees to defend, indemnify and hold harmless Microchip from any and all damages, claims, suits, or expenses resulting from such use. No licenses are conveyed, implicitly or otherwise, under any Microchip intellectual property rights.

Trademarks

The Microchip name and logo, the Microchip logo, dsPIC, KEELOQ, KEELOQ logo, MPLAB, PIC, PICmicro, PICSTART, rfPIC and UNI/O are registered trademarks of Microchip Technology Incorporated in the U.S.A. and other countries.

FilterLab, Hampshire, HI-TECH C, Linear Active Thermistor, MXDEV, MXLAB, SEEVAL and The Embedded Control Solutions Company are registered trademarks of Microchip Technology Incorporated in the U.S.A.

Analog-for-the-Digital Age, Application Maestro, CodeGuard, dsPICDEM, dsPICDEM.net, dsPICworks, dsSPEAK, ECAN, ECONOMONITOR, FanSense, HI-TIDE, In-Circuit Serial Programming, ICSP, ICEPIC, Mindi, MiWi, MPASM, MPLAB Certified logo, MPLIB, MPLINK, mTouch, Omniscient Code Generation, PICC, PICC-18, PICkit, PICDEM, PICDEM.net, PICtail, PIC^{32} logo, REAL ICE, rfLAB, Select Mode, Total Endurance, TSHARC, WiperLock and ZENA are trademarks of Microchip Technology Incorporated in the U.S.A. and other countries.

SQTP is a service mark of Microchip Technology Incorporated in the U.S.A.

All other trademarks mentioned herein are property of their respective companies.

© 2009, Microchip Technology Incorporated, Printed in the U.S.A., All Rights Reserved.

Printed on recycled paper.

QUALITY MANAGEMENT SYSTEM
CERTIFIED BY DNV
ISO/TS 16949:2002

Microchip received ISO/TS-16949:2002 certification for its worldwide headquarters, design and wafer fabrication facilities in Chandler and Tempe, Arizona; Gresham, Oregon and design centers in California and India. The Company's quality system processes and procedures are for its PIC® MCUs and dsPIC® DSCs, KEELOQ® code hopping devices, Serial EEPROMs, microperipherals, nonvolatile memory and analog products. In addition, Microchip's quality system for the design and manufacture of development systems is ISO 9001:2000 certified.

© 2009 Microchip Technology Inc.

chanhvinh.com

MCP73X23 LITHIUM IRON PHOSPHATE BATTERY CHARGER EVALUATION BOARD USER'S GUIDE

Table of Contents

Preface 1
Introduction 1
Document Layout 1
Conventions Used in this Guide 2
Recommended Reading 2
The Microchip Web Site 3
Customer Support 3
Document Revision History 3

Chapter 1. Product Overview
1.1 Introduction 5
1.2 What is the MCP73X23 Lithium Iron Phosphate Battery Battery Charger Evaluation Board? 6
1.3 What the MCP73X23 Lithium Iron Phosphate Battery Battery Charger Evaluation Board Kit Includes: 6

Chapter 2. Installation and Operation
2.1 Introduction 7
2.2 Features 7
2.3 Getting Started 8

Appendix A. Schematic and Layouts
A.1 Introduction 11
A.2 Board – Schematic 12
A.3 Board – Assembly Drawing 13
A.4 Board – Top Layer 14
A.5 Board – Top Metal Layer 15
A.6 Board – Bottom Layer 16

Appendix B. Bill Of Materials (BOM)

Worldwide Sales and Service 18

chanhvinh.com

NOTES:

chanhvinh.com

© 2009 Microchip Technology Inc.

chanhvinh.com

MCP73X23 LITHIUM IRON PHOSPHATE BATTERY CHARGER EVALUATION BOARD USER'S GUIDE

Preface

NOTICE TO CUSTOMERS

All documentation becomes dated, and this manual is no exception. Microchip tools and documentation are constantly evolving to meet customer needs, so some actual dialogs and/or tool descriptions may differ from those in this document. Please refer to our web site (www.microchip.com) to obtain the latest documentation available.

Documents are identified with a "DS" number. This number is located on the bottom of each page, in front of the page number. The numbering convention for the DS number is "DSXXXXXA", where "XXXXX" is the document number and "A" is the revision level of the document.

For the most up-to-date information on development tools, see the MPLAB® IDE on-line help. Select the Help menu, and then Topics to open a list of available on-line help files.

INTRODUCTION

This chapter contains general information that will be useful to know before using the MCP73X23 Lithium Iron Phosphate Battery Charger Evaluation Board. Items discussed in this chapter include:

- Document Layout
- Conventions Used in this Guide
- Recommended Reading
- The Microchip Web Site
- Customer Support
- Document Revision History

DOCUMENT LAYOUT

This document describes how to use the MCP73X23 Lithium Iron Phosphate Battery Charger Evaluation Board. The manual layout is as follows:

- **Chapter 1. "Product Overview"** – Important information about the MCP73X23 Lithium Iron Phosphate Battery Charger Evaluation Board.
- **Chapter 2. "Installation and Operation"** – Includes instructions on how to get started with this user's guide and a description of the user's guide.
- **Appendix A. "Schematic and Layouts"** – Shows the schematic and layout diagrams for the MCP73X23 Lithium Iron Phosphate Battery Charger Evaluation Board.
- **Appendix B. "Bill Of Materials (BOM)"** – Lists the parts used to build the MCP73X23 Lithium Iron Phosphate Battery Charger Evaluation Board.

© 2009 Microchip Technology Inc.

chanhvinh.com

CONVENTIONS USED IN THIS GUIDE

This manual uses the following documentation conventions:

DOCUMENTATION CONVENTIONS

Description	Represents	Examples
Arial font:		
Italic characters	Referenced books	*MPLAB® IDE User's Guide*
	Emphasized text	...is the *only* compiler...
Initial caps	A window	the Output window
	A dialog	the Settings dialog
	A menu selection	select Enable Programmer
Quotes	A field name in a window or dialog	"Save project before build"
Underlined, italic text with right angle bracket	A menu path	*File>Save*
Bold characters	A dialog button	Click **OK**
	A tab	Click the **Power** tab
'b*nnnn*	A binary number where *n* is a digit	'b00100, 'b10
Text in angle brackets < >	A key on the keyboard	Press <Enter>, <F1>
Courier font:		
Plain Courier	Sample source code	`#define START`
	Filenames	`autoexec.bat`
	File paths	`c:\mcc18\h`
	Keywords	`_asm, _endasm, static`
	Command-line options	`-Opa+, -Opa-`
	Bit values	`0, 1`
Italic Courier	A variable argument	*`file`*`.o`, where *`file`* can be any valid filename
`0x`*`nnnn`*	A hexadecimal number where *n* is a hexadecimal digit	`0xFFFF`, `0x007A`
Square brackets [ ]	Optional arguments	`mcc18 [options]` *`file`* `[options]`
Curly brackets and pipe character: { | }	Choice of mutually exclusive arguments; an OR selection	`errorlevel {0|1}`
Ellipses...	Replaces repeated text	`var_name [, var_name...]`
	Represents code supplied by user	`void main (void) { ... }`

RECOMMENDED READING

This user's guide describes how to use MCP73X23 Lithium Iron Phosphate Battery Charger Evaluation Board. The following Microchip document is recommended as supplemental reference resources.

MCP73123/223 Data Sheet, **"*Lithium Iron Phosphate (LiFePO4) Battery Charge Management Controller with Input Overvoltage Protection*"**, **DS22191**

This data sheet provides detailed information regarding the MCP73123/223 product family.

© 2009 Microchip Technology Inc.

chanhvinh.com

Preface

THE MICROCHIP WEB SITE

Microchip provides online support via our web site at www.microchip.com. This web site is used as a means to make files and information easily available to customers. Accessible by using your favorite Internet browser, the web site contains the following information:

- **Product Support** – Data sheets and errata, application notes and sample programs, design resources, user's guides and hardware support documents, latest software releases and archived software
- **General Technical Support** – Frequently Asked Questions (FAQs), technical support requests, online discussion groups, Microchip consultant program member listing
- **Business of Microchip** – Product selector and ordering guides, latest Microchip press releases, listing of seminars and events, listings of Microchip sales offices, distributors and factory representatives

CUSTOMER SUPPORT

Users of Microchip products can receive assistance through several channels:

- Distributor or Representative
- Local Sales Office
- Field Application Engineer (FAE)
- Technical Support
- Development Systems Information Line

Customers should contact their distributor, representative or field application engineer (FAE) for support. Local sales offices are also available to help customers. A listing of sales offices and locations is included in the back of this document.

Technical support is available through the web site at: http://support.microchip.com

DOCUMENT REVISION HISTORY

Revision A (July 2009)

- Initial Release of this Document.

chanhvinh.com

NOTES:

chanhvinh.com

© 2009 Microchip Technology Inc.

chanhvinh.com

MCP73X23 LITHIUM IRON PHOSPHATE BATTERY CHARGER EVALUATION BOARD USER'S GUIDE

Chapter 1. Product Overview

1.1 INTRODUCTION

The MCP73123/223 product family is highly integrated linear charge management controllers for lithium iron phosphate ($LiFePO_4$) batteries. The MCP73123/223 product family operates with minimum external components, which is ideal for use in space-limited and cost-effective applications. The maximum 18V rated input over voltage protection and battery short circuit protection offer designers a secondary protection in addition to the Li-Ion battery protection circuit.

This chapter provides an overview of the MCP73X23 Lithium Iron Phosphate Battery Charger Evaluation Boardand covers the following topics:

- "What is the MCP73X23 Lithium Iron Phosphate Battery Charger Evaluation Board?"
- "What the MCP73X23 Lithium Iron Phosphate Battery Charger Evaluation Board Kit Includes"

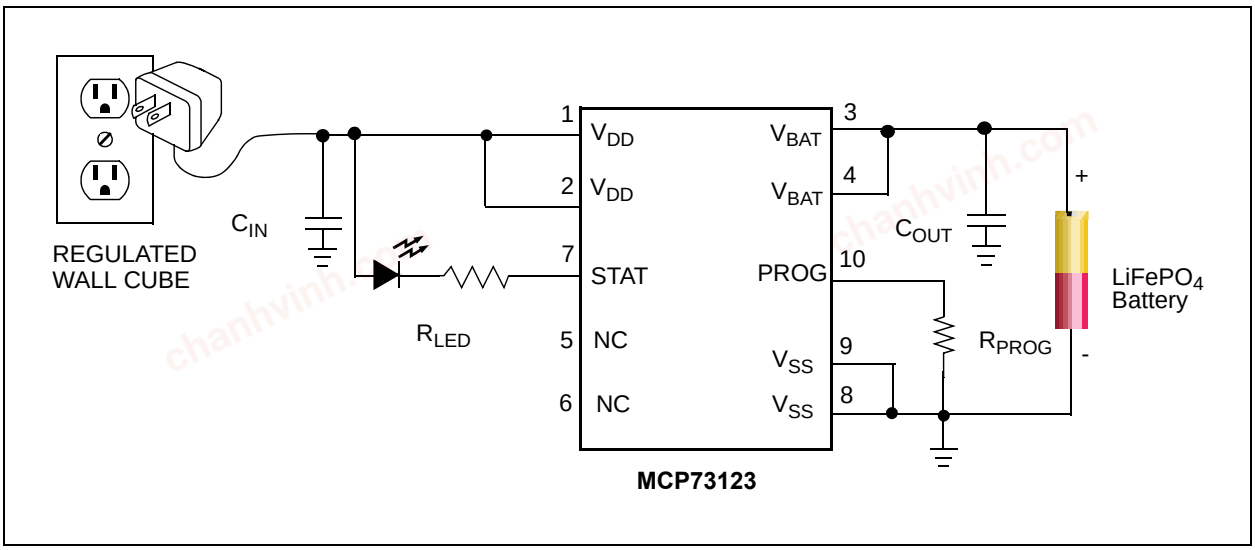

FIGURE 1-1: *MCP73123 Typical Application.*

chanhvinh.com

1.2 WHAT IS THE MCP73X23 LITHIUM IRON PHOSPHATE BATTERY CHARGER EVALUATION BOARD?

The MCP73X23 Lithium Iron Phosphate Battery Charger Evaluation Board demonstrates the features of Microchip's MCP73123 and MCP73223 "**Lithium Iron Phosphate ($LiFePO_4$) Battery Charge Management Controller with Input Overvoltage Protection**".

The MCP73X23 Lithium Iron Phosphate Battery Charger Evaluation Board is designed with two independent circuits. The MCP73123 is designed to charge a single-cell $LiFePO_4$ battery, while the MCP73223 charges a dual-cell $LiFePO_4$ battery. Both circuits offer two different fast charging currents. The default value of fast charging current is 500 mA and when PROG via is tie to ground, the two parallel resistors output 1000 mA fast charging current to a battery pack. One blue LED status output allows user to learn if the MCP73123/223 is in charging state or not.

Note:	Please refer to Table 2-2 for Charge Status Outputs and Table 2-1 for Fast Charge Current vs. Resistor Lookup Table.

The MCP73X23 Lithium Iron Phosphate Battery Charger Evaluation Board comes with installed MCP73123 and MCP73223 devices in 3 mm x 3 mm DFN packages. The factory preset battery regulation voltage is 3.6V for the MCP73123 and 7.2V for the MCP73223 with 10% precondition current, 10% termination current set point, automatic recharge and 6.5V over voltage protection threshold voltage.

The MCP73X23 Lithium Iron Phosphate Battery Charger Evaluation Board is designed to observe the performance and features of Microchip's MCP73123 and MCP73223. Circuits can also be implemented into suitable applications without extra work.

1.3 WHAT THE MCP73X23 LITHIUM IRON PHOSPHATE BATTERY CHARGER EVALUATION BOARD KIT INCLUDES

The MCP73X23 Lithium Iron Phosphate Battery Charger Evaluation Board kit includes:

- MCP73X23 Lithium Iron Phosphate Battery Charger Evaluation Board, 102-00262
- Important Information Sheet.

© 2009 Microchip Technology Inc.

chanhvinh.com

Chapter 2. Installation and Operation

2.1 INTRODUCTION

The MCP73123/223 is a highly integrated Li-Ion battery charge management controller for use in space-limited and cost-sensitive applications. The MCP73123/223 provides specific charge algorithms for Lithium Iron Phosphate batteries to achieve optimal capacity and safety in the shortest charging time possible. Along with its small physical size, the low number of external components makes the MCP73123/223 ideally suitable for low-cost and small-capacity (less than 2000 mAh) $LiFePO_4$ battery applications. It will take longer time to complete a charge cycle for larger capacity $LiFePO_4$ battery packs.

The absolute maximum voltage, up to 18V over voltage protection, allows the use of MCP73123/223 in harsh environments, such as low cost ac-dc adapter.

The MCP73123/223 employs a constant current / constant voltage (CC-CV) charge algorithm and 3.6V per cell voltage regulations. The fast charge, constant current value is set with one external resistor from 130 mA to 1100 mA. The MCP73123/223 also limits the charge current based on die temperature during high power or high ambient conditions. This thermal regulation optimizes the charge cycle time while maintaining device reliability.

The PROG pin of the MCP73123/223 also serves as enable pin. When high impedance (typ. 200 kΩ) is applied, the MCP73123/223 will be in standby mode.

Typical applications for the reference design are Toys, Power Tools, Uninterrupt Power Supply, Backup Power Storage and applications in wider temperature range than typical Li-Ion batteries.

2.2 FEATURES

The MCP73X23 Lithium Iron Phosphate Battery Charger Evaluation Board has the following features:

- Input Over Voltage Protection:
  - 6.5V for the MCP73123,
  - 13V for the MCP73223
- Charge Regulation Voltage:
  - 3.6V for the MCP73123,
  - 7.2V for the MCP73223
- 10% Preconditioning of Deeply Depleted Cells
- 32-Minute Preconditioning Timer
- 6-Hour Safety Timer
- 10% Automatic Charge Termination
- 500 mA and 1000 mA Preset Fast Charge Current
- Automatic Recharge
- Thermal Regulation
- One Blue LED Charge Status Indicator For Each Circuit
- Pre-installed MCP73123 and MCP73223 Devices

© 2009 Microchip Technology Inc.

chanhvinh.com

2.3 GETTING STARTED

The MCP73X23 Lithium Iron Phosphate Battery Charger Evaluation Board is fully assembled and tested for charging $LiFePO_4$ batteries.

2.3.1 Power Input and Output Connection

2.3.1.1 POWERING THE MCP73X23 LITHIUM IRON PHOSPHATE BATTERY CHARGER EVALUATION BOARD

1. Connect the positive battery terminal to V_{BAT+} and negative battery terminal to V_{BAT-}.
2. Connect the DC power supply Negative Terminal to V_{SS}.
3. Connect the DC power supply Positive Terminal to V_{DD}.
4. It should initiate the battery charging cycle when the power source is present and V_{BAT} is below recharge threshold. For example, When V_{REG} is 3.6V, V_{BAT} needs to be lower than 3.42V to initiate the charge cycle.

Note 1: The MCP73123 circuit is designed to charge one-cell $LiFePO_4$ battery and the MCP73223 circuit is designed to charge two-cell $LiFePO_4$ battery.

2: The $LiFePO_4$ battery can be replaced with test circuit or electronic load that can sink current with DC power supply. Refer to Figure 2-3.

5. The charging status table is available on Table 2-2.
6. The fast charge current is preset at 500 mA and can be increased to 1A by connecting PROG via to ground.

Note: Fast Charge Current can be programmed with various resistors based on Figure 2-2 and Table 2-2.

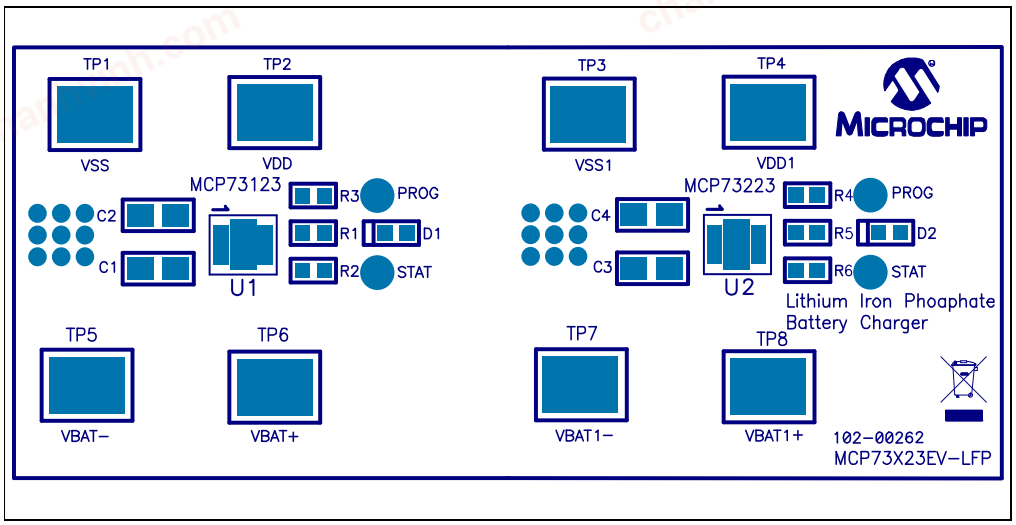

FIGURE 2-1: *Board Top Assembly.*

© 2009 Microchip Technology Inc.

chanhvinh.com

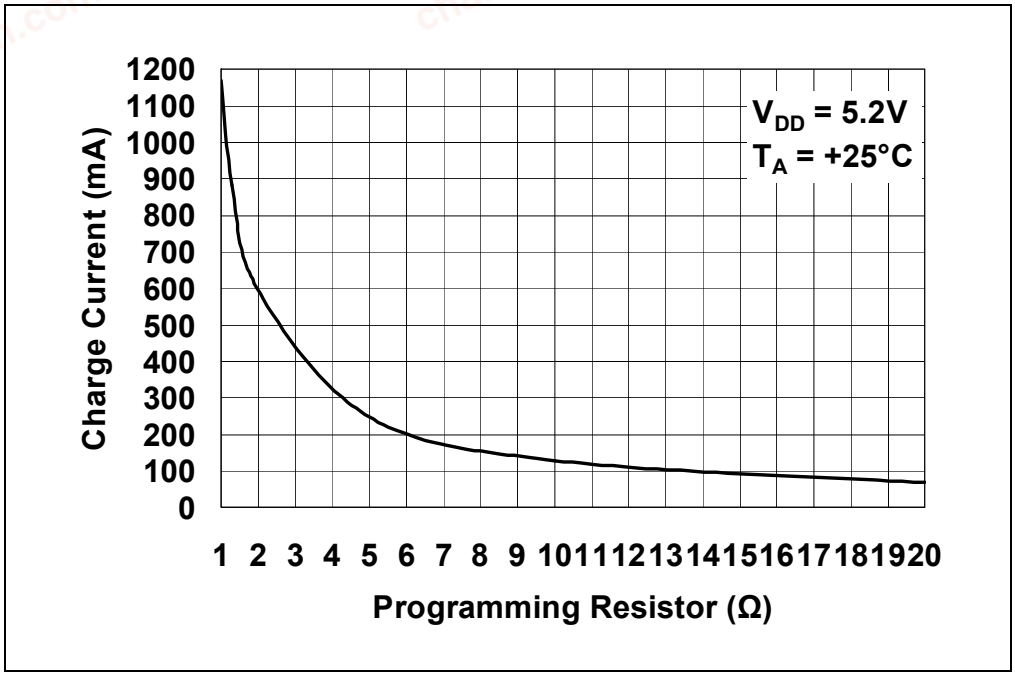

FIGURE 2-2: *MCP73123/223 Charge Current (I_{OUT}) vs. Programming Resistor (R_{PROG}).*

TABLE 2-1: MCP73123/223 RESISTOR LOOKUP TABLE

Charge Current (mA)	Recommended E96 Resistor (Ω)	Recommended E24 Resistor (Ω)
130	10k	10k
150	8.45k	8.20k
200	6.20k	6.20k
250	4.99k	5.10k
300	4.02k	3.90k
350	3.40k	3.30k
400	3.00k	3.00k
450	2.61k	2.70k
500	2.32k	2.37k
550	2.10k	2.20k
600	1.91k	2.00k
650	1.78k	1.80k
700	1.62k	1.60k
750	1.50k	1.50k
800	1.40k	1.50k
850	1.33k	1.30k
900	1.24k	1.20k
950	1.18k	1.20k
1000	1.10k	1.10k
1100	1.00k	1.00k

chanhvinh.com

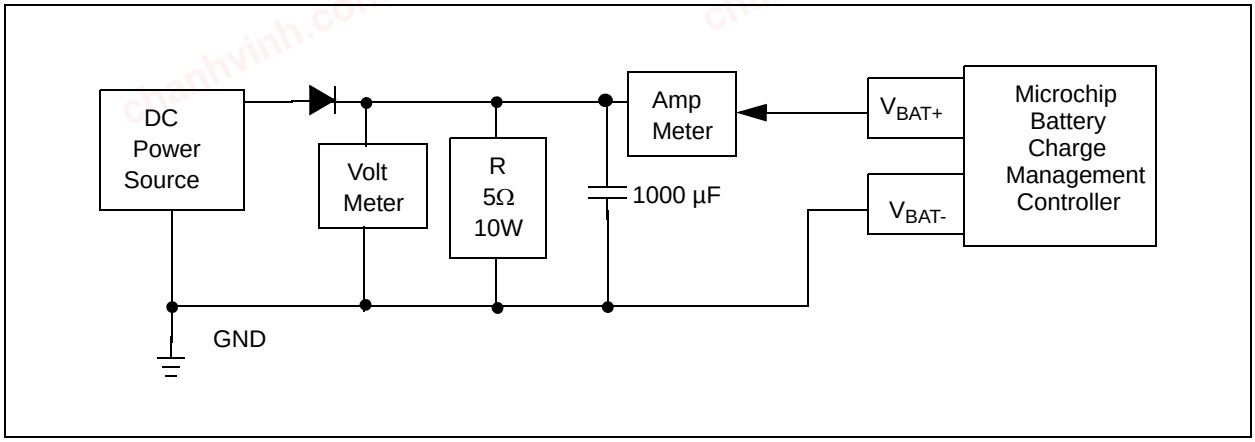

FIGURE 2-3: *Simulated Battery Load for MCP73123/223.*

TABLE 2-2: MCP73123/223 CHARGE STATUS OUTPUTS

CHARGE CYCLE STATE	STAT
Shutdown	Hi-Z
Standby	Hi-Z
Preconditioning	L
Constant Current Fast Charge	L
Constant Voltage	L
Charge Complete - Standby	Hi-Z
Temperature Fault	1.6 second 50% D.C. Flashing (Type 1) Hi-Z (Type 2)
Timer Fault	1.6 second 50% D.C. Flashing (Type 1) Hi-Z (Type 2)
Preconditioning Timer Fault	1.6 second 50% D.C. Flashing (Type 1) Hi-Z (Type 2)

© 2009 Microchip Technology Inc.

chanhvinh.com

Appendix A. Schematic and Layouts

A.1 INTRODUCTION

This appendix contains the following schematics and layouts for the MCP73X23 Lithium Iron Phosphate Battery Charger Evaluation Board:

- Board – Schematic
- Board – Top Layer
- Board – Top Metal Layer
- Board – Bottom Layer

chanhvinh.com

chanhvinh.com

A.2 BOARD – SCHEMATIC

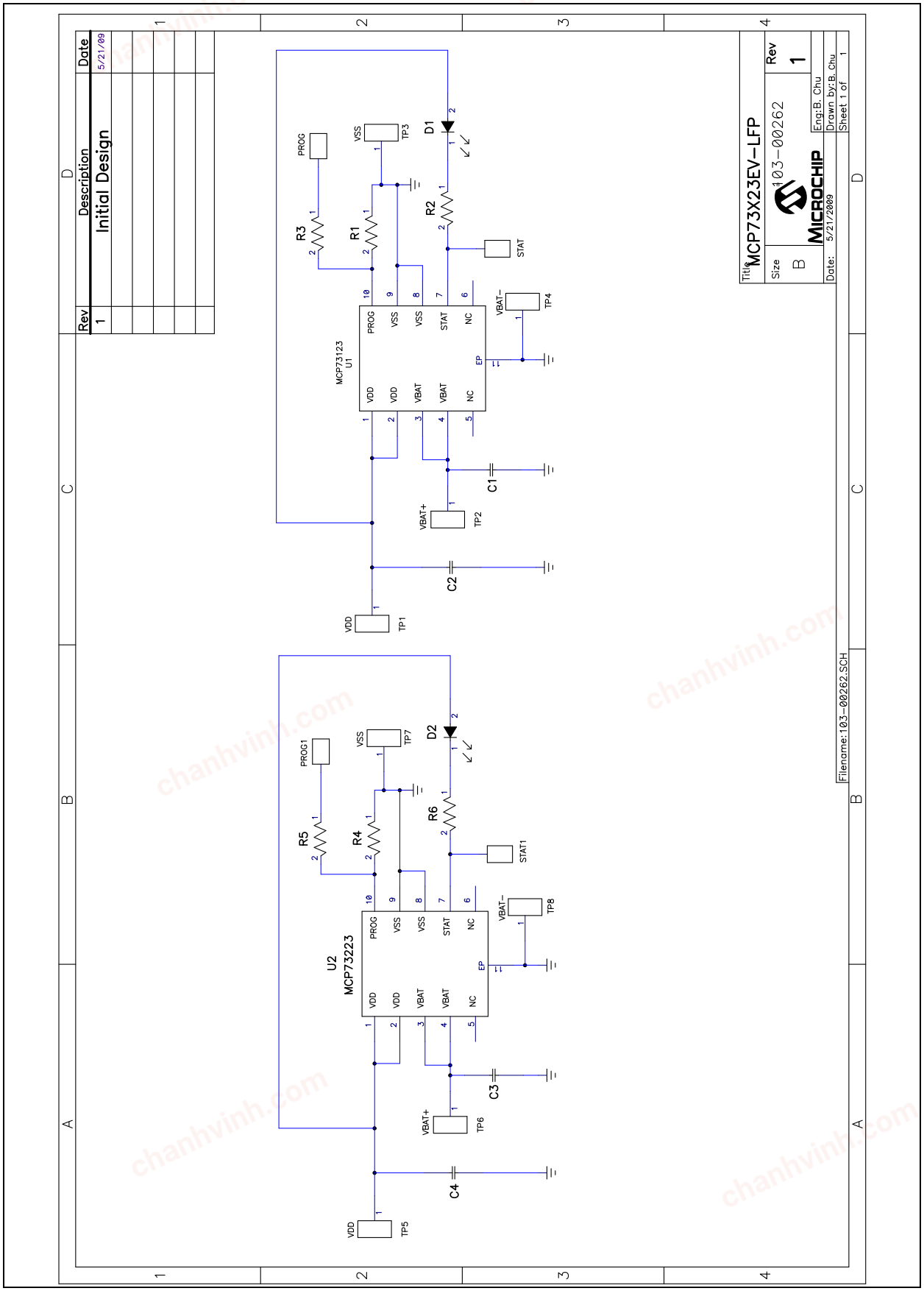

© 2009 Microchip Technology Inc.

chanhvinh.com

A.3 BOARD – TOP LAYER

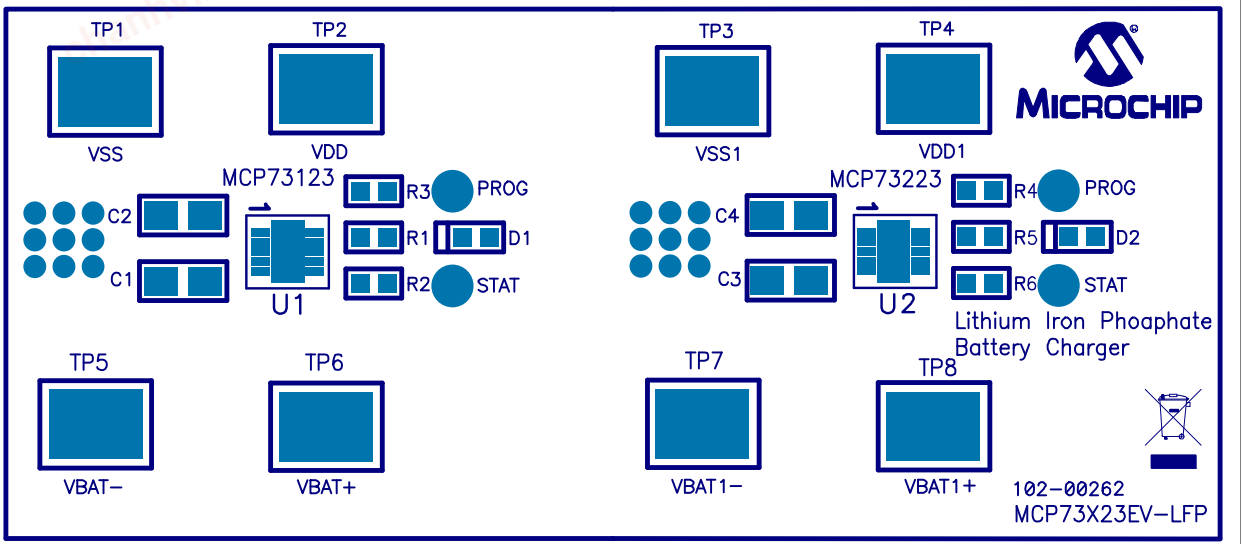

chanhvinh.com

A.4 BOARD – TOP METAL LAYER

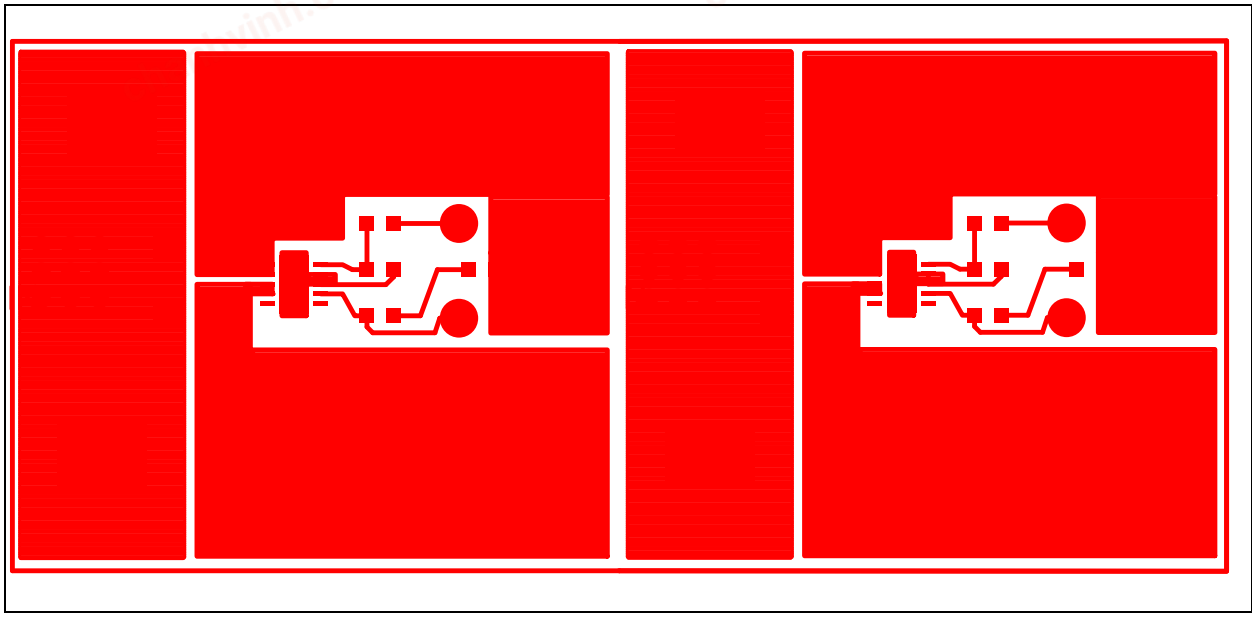

© 2009 Microchip Technology Inc.

chanhvinh.com

A.5 BOARD – BOTTOM LAYER

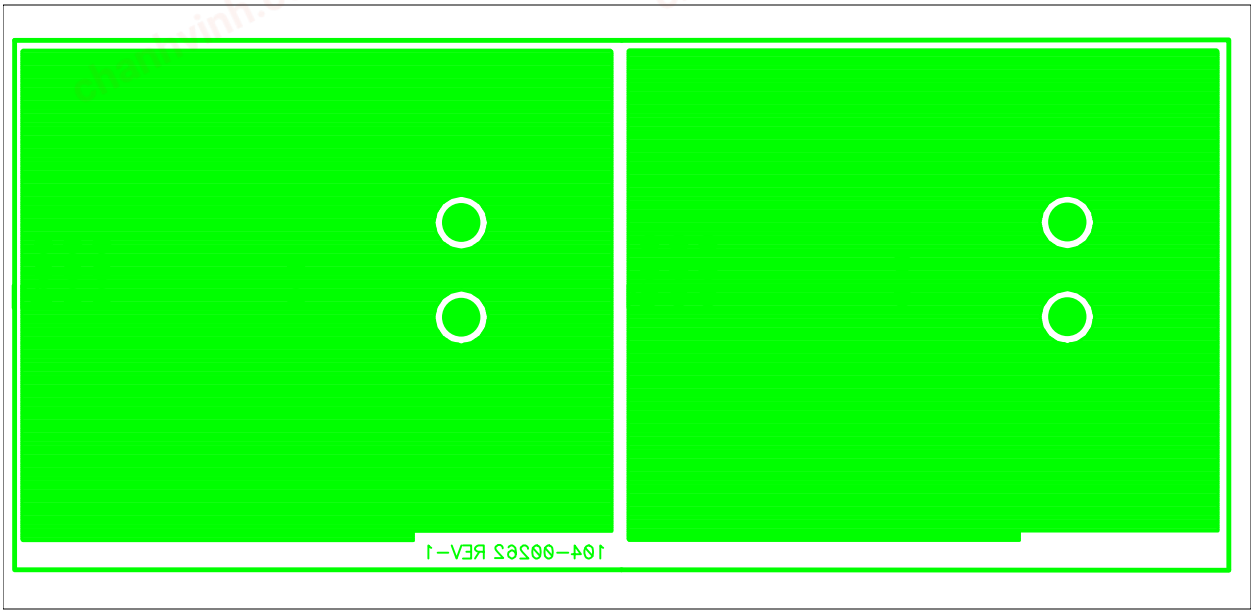

chanhvinh.com

chanhvinh.com

NOTES:

chanhvinh.com

© 2009 Microchip Technology Inc.

chanhvinh.com

Appendix B. Bill Of Materials (BOM)

TABLE B-1: BILL OF MATERIALS

Qty	Reference	Description	Manufacturer	Part Number
4	Bump	BUMPON HEMISPHERE .44X.20 WHITE	3M	SJ5003-9-ND
4	C1, C2, C3, C4	CAP CERAMIC 4.7 µF 25V X5R 1206	TDK	C2012X5R1E475M
2	D1, D2	Blue Water Clear 0603 SMD LED	Para Light USA	L-C191LBCT-U1
1	PCB	RoHS Compliant Bare PCB, MCP73X23 Evaluation Board	Microchip Technology Inc.	104-00262
4	R1, R3, R4, R5	RES 2.37K OHM 1/10W 1% 0603 SMD	Panasonic® - ECG	ERJ-3EKF2371V
2	R2, R6	RES 1K OHM 1/10W 1% 0603 SMD	Panasonic - ECG	ERJ-3EKF1001V
8	TP1, TP2, TP3, TP4, TP5, TP6, TP7, TP8	PC Test Point Compact SMT	Keystone Electronics®	5016
1	U1	Single-Cell Lithium Iron Phosphate Battery Charger with OVP	Microchip Technology Inc.	MCP73123-22S/MF
1	U2	Dual-Cell Lithium Iron Phosphate Battery Charger with OVP	Microchip Technology Inc.	MCP73223-C2S/MF

Note 1: The components listed in this Bill of Materials are representative of the PCB assembly. The released BOM used in manufacturing uses all RoHS-compliant components.

chanhvinh.com

chanhvinh.com

WORLDWIDE SALES AND SERVICE

AMERICAS

Corporate Office
2355 West Chandler Blvd.
Chandler, AZ 85224-6199
Tel: 480-792-7200
Fax: 480-792-7277
Technical Support:
http://support.microchip.com
Web Address:
www.microchip.com

Atlanta
Duluth, GA
Tel: 678-957-9614
Fax: 678-957-1455

Boston
Westborough, MA
Tel: 774-760-0087
Fax: 774-760-0088

Chicago
Itasca, IL
Tel: 630-285-0071
Fax: 630-285-0075

Cleveland
Independence, OH
Tel: 216-447-0464
Fax: 216-447-0643

Dallas
Addison, TX
Tel: 972-818-7423
Fax: 972-818-2924

Detroit
Farmington Hills, MI
Tel: 248-538-2250
Fax: 248-538-2260

Kokomo
Kokomo, IN
Tel: 765-864-8360
Fax: 765-864-8387

Los Angeles
Mission Viejo, CA
Tel: 949-462-9523
Fax: 949-462-9608

Santa Clara
Santa Clara, CA
Tel: 408-961-6444
Fax: 408-961-6445

Toronto
Mississauga, Ontario,
Canada
Tel: 905-673-0699
Fax: 905-673-6509

ASIA/PACIFIC

Asia Pacific Office
Suites 3707-14, 37th Floor
Tower 6, The Gateway
Harbour City, Kowloon
Hong Kong
Tel: 852-2401-1200
Fax: 852-2401-3431

Australia - Sydney
Tel: 61-2-9868-6733
Fax: 61-2-9868-6755

China - Beijing
Tel: 86-10-8528-2100
Fax: 86-10-8528-2104

China - Chengdu
Tel: 86-28-8665-5511
Fax: 86-28-8665-7889

China - Hong Kong SAR
Tel: 852-2401-1200
Fax: 852-2401-3431

China - Nanjing
Tel: 86-25-8473-2460
Fax: 86-25-8473-2470

China - Qingdao
Tel: 86-532-8502-7355
Fax: 86-532-8502-7205

China - Shanghai
Tel: 86-21-5407-5533
Fax: 86-21-5407-5066

China - Shenyang
Tel: 86-24-2334-2829
Fax: 86-24-2334-2393

China - Shenzhen
Tel: 86-755-8203-2660
Fax: 86-755-8203-1760

China - Wuhan
Tel: 86-27-5980-5300
Fax: 86-27-5980-5118

China - Xiamen
Tel: 86-592-2388138
Fax: 86-592-2388130

China - Xian
Tel: 86-29-8833-7252
Fax: 86-29-8833-7256

China - Zhuhai
Tel: 86-756-3210040
Fax: 86-756-3210049

ASIA/PACIFIC

India - Bangalore
Tel: 91-80-3090-4444
Fax: 91-80-3090-4080

India - New Delhi
Tel: 91-11-4160-8631
Fax: 91-11-4160-8632

India - Pune
Tel: 91-20-2566-1512
Fax: 91-20-2566-1513

Japan - Yokohama
Tel: 81-45-471- 6166
Fax: 81-45-471-6122

Korea - Daegu
Tel: 82-53-744-4301
Fax: 82-53-744-4302

Korea - Seoul
Tel: 82-2-554-7200
Fax: 82-2-558-5932 or
82-2-558-5934

Malaysia - Kuala Lumpur
Tel: 60-3-6201-9857
Fax: 60-3-6201-9859

Malaysia - Penang
Tel: 60-4-227-8870
Fax: 60-4-227-4068

Philippines - Manila
Tel: 63-2-634-9065
Fax: 63-2-634-9069

Singapore
Tel: 65-6334-8870
Fax: 65-6334-8850

Taiwan - Hsin Chu
Tel: 886-3-6578-300
Fax: 886-3-6578-370

Taiwan - Kaohsiung
Tel: 886-7-536-4818
Fax: 886-7-536-4803

Taiwan - Taipei
Tel: 886-2-2500-6610
Fax: 886-2-2508-0102

Thailand - Bangkok
Tel: 66-2-694-1351
Fax: 66-2-694-1350

EUROPE

Austria - Wels
Tel: 43-7242-2244-39
Fax: 43-7242-2244-393

Denmark - Copenhagen
Tel: 45-4450-2828
Fax: 45-4485-2829

France - Paris
Tel: 33-1-69-53-63-20
Fax: 33-1-69-30-90-79

Germany - Munich
Tel: 49-89-627-144-0
Fax: 49-89-627-144-44

Italy - Milan
Tel: 39-0331-742611
Fax: 39-0331-466781

Netherlands - Drunen
Tel: 31-416-690399
Fax: 31-416-690340

Spain - Madrid
Tel: 34-91-708-08-90
Fax: 34-91-708-08-91

UK - Wokingham
Tel: 44-118-921-5869
Fax: 44-118-921-5820

03/26/09

© 2009 Microchip Technology Inc.