chanhvinh.com

MCP6041/2/3/4

600 nA, Rail-to-Rail Input/Output Op Amps

Features

- Low Quiescent Current: 600 nA/amplifier (typical)
- Rail-to-Rail Input/Output
- Gain Bandwidth Product: 14 kHz (typical)
- Wide Supply Voltage Range: 1.4V to 6.0V
- Unity Gain Stable
- Available in Single, Dual, and Quad
- Chip Select ($\overline{CS}$) with MCP6043
- Available in 5-lead and 6-lead SOT-23 Packages
- Temperature Ranges:
  - Industrial: -40°C to +85°C
  - Extended: -40°C to +125°C

Applications

- Toll Booth Tags
- Wearable Products
- Temperature Measurement
- Battery Powered

Design Aids

- SPICE Macro Models
- FilterLab® Software
- Mindi™ Circuit Designer & Simulator
- MAPS (Microchip Advanced Part Selector)
- Analog Demonstration and Evaluation Boards
- Application Notes

Related Devices

- MCP6141/2/3/4: G = +10 Stable Op Amps

Typical Application

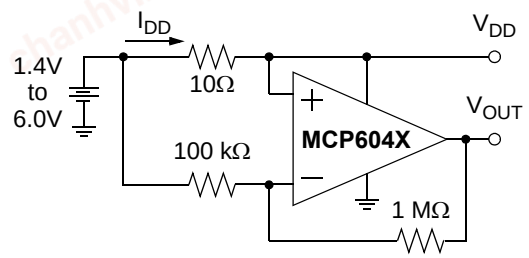

$$I_{DD} = \frac{V_{DD} - V_{OUT}}{(10\ V/V) \cdot (10\Omega)}$$

High Side Battery Current Sensor

Description

The MCP6041/2/3/4 family of operational amplifiers (op amps) from Microchip Technology Inc. operate with a single supply voltage as low as 1.4V, while drawing less than 1 µA (maximum) of quiescent current per amplifier. These devices are also designed to support rail-to-rail input and output operation. This combination of features supports battery-powered and portable applications.

The MCP6041/2/3/4 amplifiers have a gain-bandwidth product of 14 kHz (typical) and are unity gain stable. These specifications make these op amps appropriate for low frequency applications, such as battery current monitoring and sensor conditioning.

The MCP6041/2/3/4 family operational amplifiers are offered in single (MCP6041), single with Chip Select ($\overline{CS}$) (MCP6043), dual (MCP6042), and quad (MCP6044) configurations. The MCP6041 device is available in the 5-lead SOT-23 package, and the MCP6043 device is available in the 6-lead SOT-23 package.

Package Types

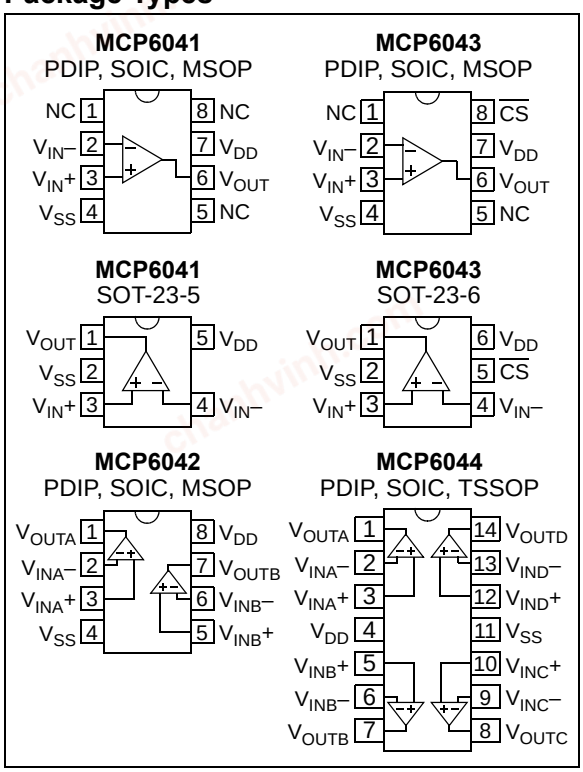

© 2008 Microchip Technology Inc.

chanhvinh.com

1.0 ELECTRICAL CHARACTERISTICS

Absolute Maximum Ratings †

$V_{DD} - V_{SS}$ 7.0V
Current at Input Pins .....±2 mA
Analog Inputs ($V_{IN}+$, $V_{IN}-$) ..... V_{SS} – 1.0V to V_{DD} + 1.0V
All Other Inputs and Outputs..... V_{SS} – 0.3V to V_{DD} + 0.3V
Difference Input voltage ..... $|V_{DD} - V_{SS}|$
Output Short Circuit Current .....continuous
Current at Output and Supply Pins .....±30 mA
Storage Temperature.....–65°C to +150°C
Junction Temperature.....+150°C
ESD protection on all pins (HBM; MM) ..... ≥ 4 kV; 200V

† Notice: Stresses above those listed under "Absolute Maximum Ratings" may cause permanent damage to the device. This is a stress rating only and functional operation of the device at those or any other conditions above those indicated in the operational listings of this specification is not implied. Exposure to maximum rating conditions for extended periods may affect device reliability.

†† See **Section 4.1 "Rail-to-Rail Input"**

DC ELECTRICAL CHARACTERISTICS

Electrical Characteristics: Unless otherwise indicated, V_{DD} = +1.4V to +5.5V, V_{SS} = GND, T_A = 25°C, V_{CM} = V_{DD}/2, $V_{OUT} \approx V_{DD}/2$, $V_L = V_{DD}/2$, and R_L = 1 MΩ to V_L (refer to Figure 1-2 and Figure 1-3).

Parameters	Sym	Min	Typ	Max	Units	Conditions
Input Offset						
Input Offset Voltage	V_{OS}	-3	—	+3	mV	$V_{CM} = V_{SS}$
Drift with Temperature	$\Delta V_{OS}/\Delta T_A$	—	±2	—	µV/°C	$V_{CM} = V_{SS}$, T_A= -40°C to +85°C
	$\Delta V_{OS}/\Delta T_A$	—	±15	—	µV/°C	$V_{CM} = V_{SS}$, T_A= +85°C to +125°C
Power Supply Rejection	PSRR	70	85	—	dB	$V_{CM} = V_{SS}$
Input Bias Current and Impedance						
Input Bias Current	I_B	—	1	—	pA	
Industrial Temperature	I_B	—	20	100	pA	T_A = +85°
Extended Temperature	I_B	—	1200	5000	pA	T_A = +125°
Input Offset Current	I_{OS}	—	1	—	pA	
Common Mode Input Impedance	Z_{CM}	—	10^{13}||6	—	Ω||pF	
Differential Input Impedance	Z_{DIFF}	—	10^{13}||6	—	Ω||pF	
Common Mode						
Common-Mode Input Range	V_{CMR}	V_{SS}–0.3	—	V_{DD}+0.3	V	
Common-Mode Rejection Ratio	CMRR	62	80	—	dB	V_{DD} = 5V, V_{CM} = -0.3V to 5.3V
	CMRR	60	75	—	dB	V_{DD} = 5V, V_{CM} = 2.5V to 5.3V
	CMRR	60	80	—	dB	V_{DD} = 5V, V_{CM} = -0.3V to 2.5V
Open-Loop Gain						
DC Open-Loop Gain (large signal)	A_{OL}	95	115	—	dB	R_L = 50 kΩ to V_L, V_{OUT} = 0.1V to V_{DD}–0.1V
Output						
Maximum Output Voltage Swing	V_{OL}, V_{OH}	V_{SS} + 10	—	V_{DD} – 10	mV	R_L = 50 kΩ to V_L, 0.5V input overdrive
Linear Region Output Voltage Swing	V_{OVR}	V_{SS} + 100	—	V_{DD} – 100	mV	R_L = 50 kΩ to V_L, A_{OL} ≥ 95 dB
Output Short Circuit Current	I_{SC}	—	2	—	mA	V_{DD} = 1.4V
	I_{SC}	—	20	—	mA	V_{DD} = 5.5V
Power Supply						
Supply Voltage	V_{DD}	1.4	—	6.0	V	**(Note 1)**
Quiescent Current per Amplifier	I_Q	0.3	0.6	1.0	µA	I_O = 0

Note 1: All parts with date codes November 2007 and later have been screened to ensure operation at V_{DD} = 6.0V. However, the other minimum and maximum specifications are measured at 1.4V and/or 5.5V.

© 2008 Microchip Technology Inc.

chanhvinh.com

AC ELECTRICAL CHARACTERISTICS

Electrical Characteristics: Unless otherwise indicated, V_{DD} = +1.4V to +5.5V, V_{SS} = GND, T_A = 25°C, V_{CM} = V_{DD}/2, $V_{OUT} \approx V_{DD}/2$, $V_L = V_{DD}/2$, R_L = 1 MΩ to V_L, and C_L = 60 pF (refer to Figure 1-2 and Figure 1-3).

Parameters	Sym	Min	Typ	Max	Units	Conditions
AC Response						
Gain Bandwidth Product	GBWP	—	14	—	kHz	
Slew Rate	SR	—	3.0	—	V/ms	
Phase Margin	PM	—	65	—	°	G = +1 V/V
Noise						
Input Voltage Noise	E_{ni}	—	5.0	—	μV_{P-P}	f = 0.1 Hz to 10 Hz
Input Voltage Noise Density	e_{ni}	—	170	—	nV/√Hz	f = 1 kHz
Input Current Noise Density	i_{ni}	—	0.6	—	fA/√Hz	f = 1 kHz

MCP6043 CHIP SELECT ($\overline{CS}$) ELECTRICAL CHARACTERISTICS

Electrical Characteristics: Unless otherwise indicated, V_{DD} = +1.4V to +5.5V, V_{SS} = GND, T_A = 25°C, V_{CM} = V_{DD}/2, $V_{OUT} \approx V_{DD}/2$, $V_L = V_{DD}/2$, R_L = 1 MΩ to V_L, and C_L = 60 pF (refer to Figure 1-2 and Figure 1-3).

Parameters	Sym	Min	Typ	Max	Units	Conditions
$\overline{CS}$ Low Specifications						
$\overline{CS}$ Logic Threshold, Low	V_{IL}	V_{SS}	—	V_{SS}+0.3	V	
$\overline{CS}$ Input Current, Low	I_{CSL}	—	5	—	pA	$\overline{CS}$ = V_{SS}
$\overline{CS}$ High Specifications						
$\overline{CS}$ Logic Threshold, High	V_{IH}	V_{DD}–0.3	—	V_{DD}	V	
$\overline{CS}$ Input Current, High	I_{CSH}	—	5	—	pA	$\overline{CS}$ = V_{DD}
$\overline{CS}$ Input High, GND Current	I_{SS}	—	-20	—	pA	$\overline{CS}$ = V_{DD}
Amplifier Output Leakage, $\overline{CS}$ High	I_{OLEAK}	—	20	—	pA	$\overline{CS}$ = V_{DD}
Dynamic Specifications						
$\overline{CS}$ Low to Amplifier Output Turn-on Time	t_{ON}	—	2	50	ms	G = +1V/V, $\overline{CS}$ = 0.3V to V_{OUT} = 0.9V_{DD}/2
$\overline{CS}$ High to Amplifier Output High-Z	t_{OFF}	—	10	—	µs	G = +1V/V, $\overline{CS}$ = V_{DD}–0.3V to V_{OUT} = 0.1V_{DD}/2
Hysteresis	V_{HYST}	—	0.6	—	V	V_{DD} = 5.0V

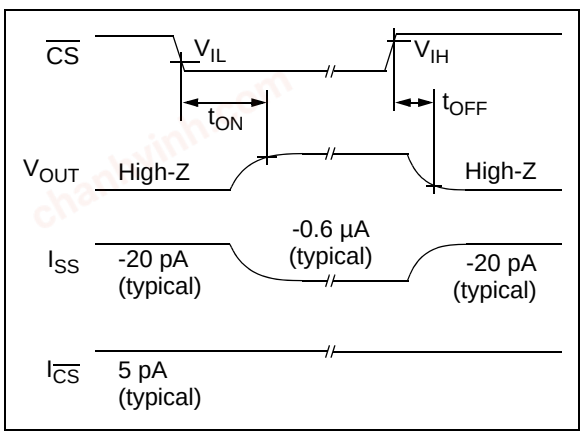

FIGURE 1-1: *Chip Select ($\overline{CS}$) Timing Diagram (MCP6043 only).*

chanhvinh.com

TEMPERATURE CHARACTERISTICS

Electrical Characteristics: Unless otherwise indicated, V_{DD} = +1.4V to +5.5V, V_{SS} = GND.						
Parameters	**Sym**	**Min**	**Typ**	**Max**	**Units**	**Conditions**
Temperature Ranges						
Specified Temperature Range	T_A	-40	—	+85	°C	Industrial Temperature parts
	T_A	-40	—	+125	°C	Extended Temperature parts
Operating Temperature Range	T_A	-40	—	+125	°C	**(Note 1)**
Storage Temperature Range	T_A	-65	—	+150	°C	
Thermal Package Resistances						
Thermal Resistance, 5L-SOT-23	θ_{JA}	—	256	—	°C/W	
Thermal Resistance, 6L-SOT-23	θ_{JA}	—	230	—	°C/W	
Thermal Resistance, 8L-PDIP	θ_{JA}	—	85	—	°C/W	
Thermal Resistance, 8L-SOIC	θ_{JA}	—	163	—	°C/W	
Thermal Resistance, 8L-MSOP	θ_{JA}	—	206	—	°C/W	
Thermal Resistance, 14L-PDIP	θ_{JA}	—	70	—	°C/W	
Thermal Resistance, 14L-SOIC	θ_{JA}	—	120	—	°C/W	
Thermal Resistance, 14L-TSSOP	θ_{JA}	—	100	—	°C/W	

Note 1: The MCP6041/2/3/4 family of Industrial Temperature op amps operates over this extended range, but with reduced performance. In any case, the internal Junction Temperature (T_J) must not exceed the Absolute Maximum specification of +150°C.

1.1 Test Circuits

The test circuits used for the DC and AC tests are shown in Figure 1-2 and Figure 1-3. The bypass capacitors are laid out according to the rules discussed in **Section 4.6 "Supply Bypass"**.

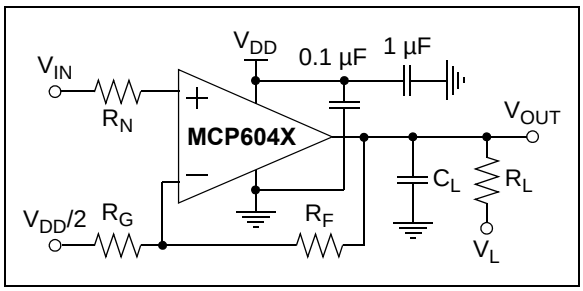

FIGURE 1-2: *AC and DC Test Circuit for Most Non-Inverting Gain Conditions.*

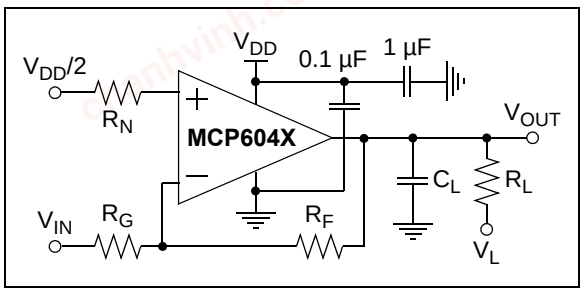

FIGURE 1-3: *AC and DC Test Circuit for Most Inverting Gain Conditions.*

© 2008 Microchip Technology Inc.

chanhvinh.com

2.0 TYPICAL PERFORMANCE CURVES

Note: The graphs and tables provided following this note are a statistical summary based on a limited number of samples and are provided for informational purposes only. The performance characteristics listed herein are not tested or guaranteed. In some graphs or tables, the data presented may be outside the specified operating range (e.g., outside specified power supply range) and therefore outside the warranted range.

Note: Unless otherwise indicated, T_A = +25°C, V_{DD} = +1.4V to +6.0V, V_{SS} = GND, V_{CM} = V_{DD}/2, V_{OUT} ≈ V_{DD}/2, V_L = V_{DD}/2, R_L = 1 MΩ to V_L, and C_L = 60 pF.

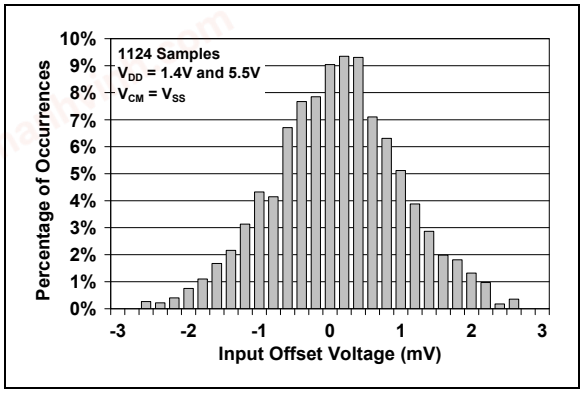

FIGURE 2-1: *Input Offset Voltage.*

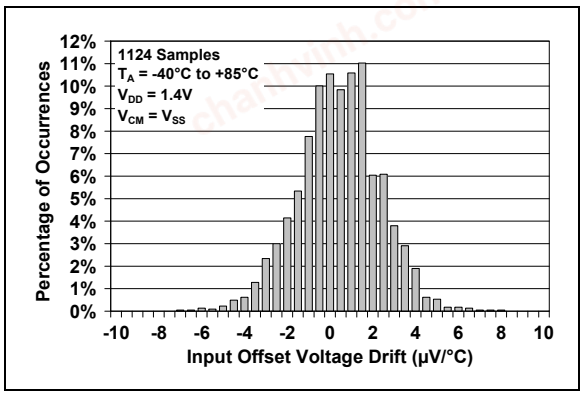

FIGURE 2-2: *Input Offset Voltage Drift with T_A = -40°C to +85°C.*

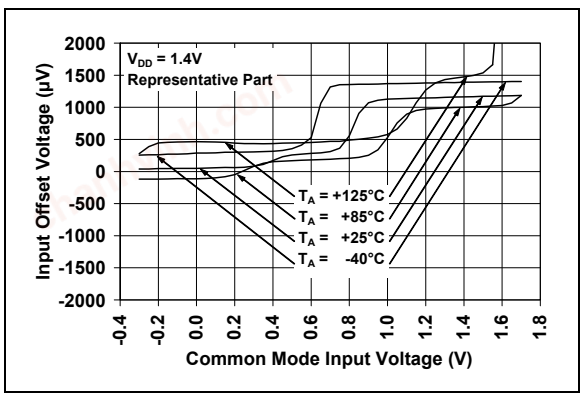

FIGURE 2-3: *Input Offset Voltage vs. Common Mode Input Voltage with V_{DD} = 1.4V.*

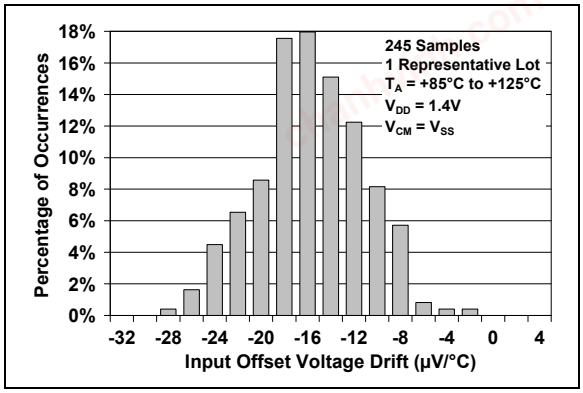

FIGURE 2-4: *Input Offset Voltage Drift with T_A = +85°C to +125°C and V_{DD} = 1.4V.*

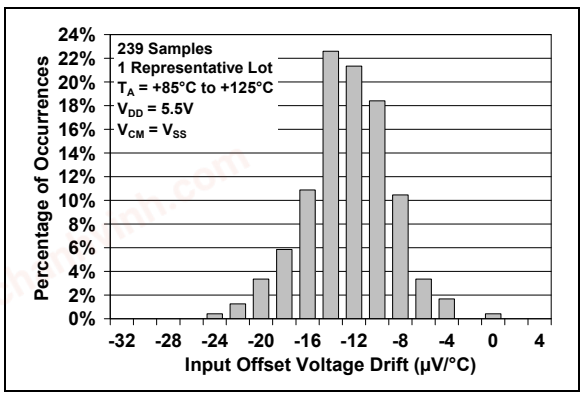

FIGURE 2-5: *Input Offset Voltage Drift with T_A = +25°C to +125°C and V_{DD} = 5.5V.*

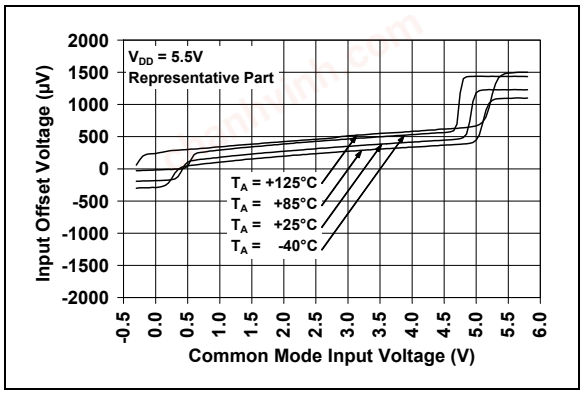

FIGURE 2-6: *Input Offset Voltage vs. Common Mode Input Voltage with V_{DD} = 5.5V.*

chanhvinh.com

Note: Unless otherwise indicated, T_A = +25°C, V_{DD} = +1.4V to +6.0V, V_{SS} = GND, V_{CM} = V_{DD}/2, V_{OUT} ≈ V_{DD}/2, V_L = V_{DD}/2, R_L = 1 MΩ to V_L, and C_L = 60 pF.

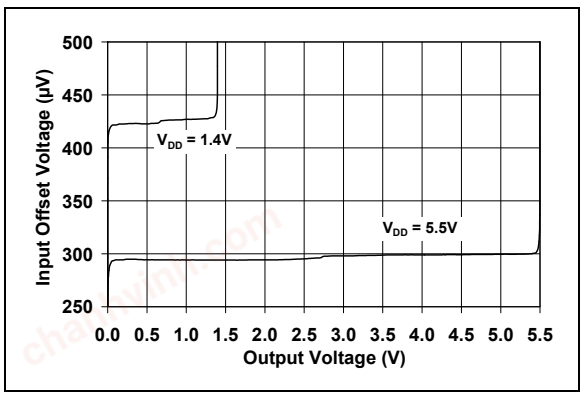

FIGURE 2-7: *Input Offset Voltage vs. Output Voltage.*

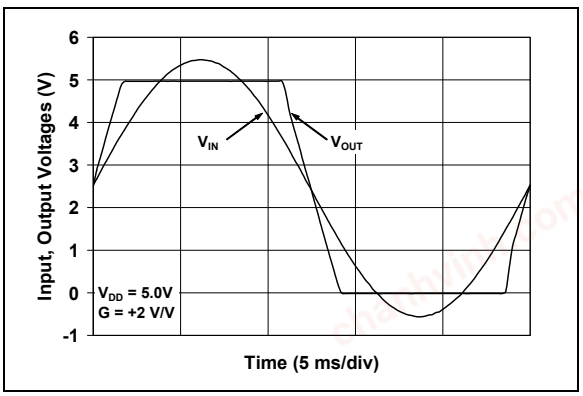

FIGURE 2-10: *The MCP6041/2/3/4 family shows no phase reversal.*

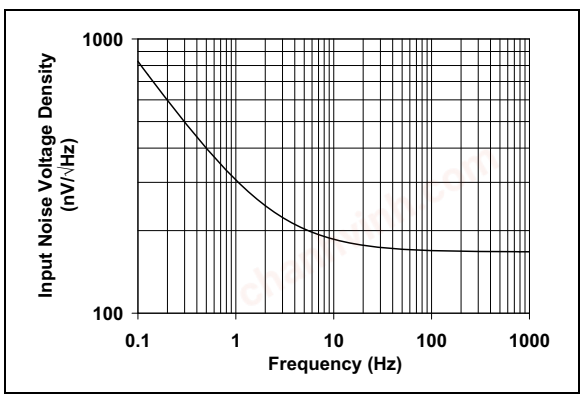

FIGURE 2-8: *Input Noise Voltage Density vs. Frequency.*

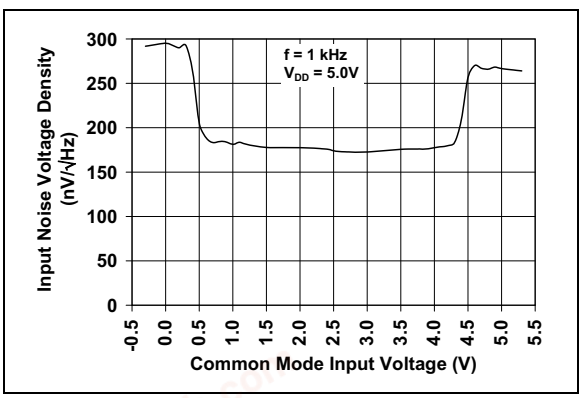

FIGURE 2-11: *Input Noise Voltage Density vs. Common Mode Input Voltage.*

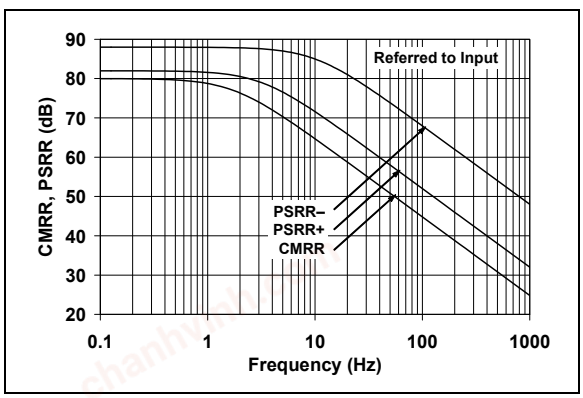

FIGURE 2-9: *CMRR, PSRR vs. Frequency.*

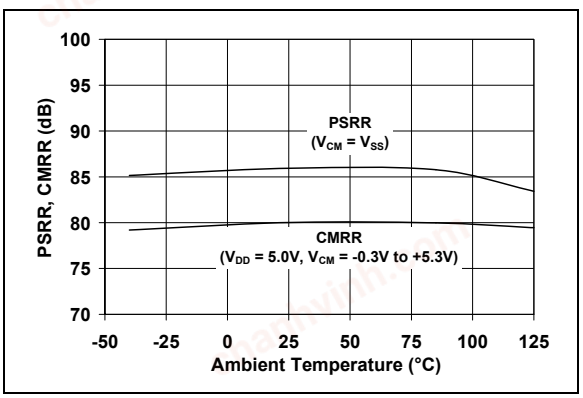

FIGURE 2-12: *CMRR, PSRR vs. Ambient Temperature.*

© 2008 Microchip Technology Inc.

chanhvinh.com

Note: Unless otherwise indicated, T_A = +25°C, V_{DD} = +1.4V to +6.0V, V_{SS} = GND, V_{CM} = V_{DD}/2, V_{OUT} ≈ V_{DD}/2, V_L = V_{DD}/2, R_L = 1 MΩ to V_L, and C_L = 60 pF.

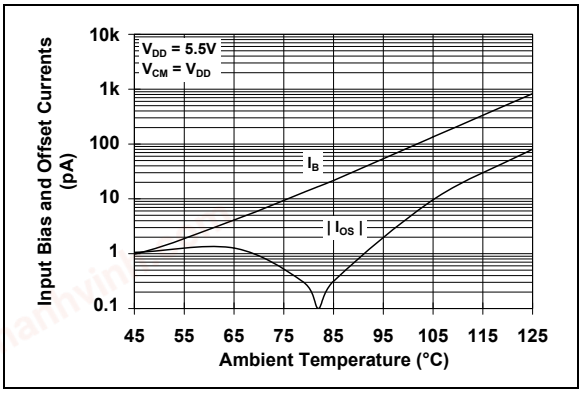

FIGURE 2-13: *Input Bias, Offset Currents vs. Ambient Temperature.*

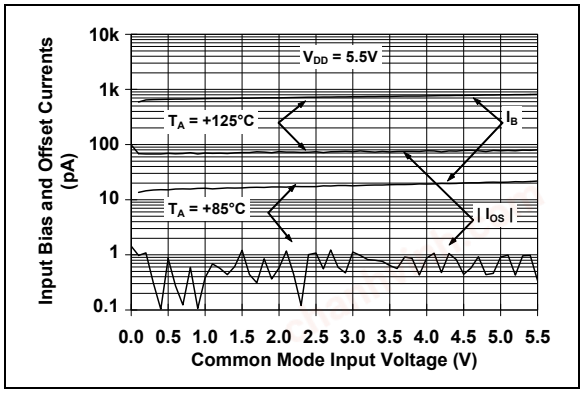

FIGURE 2-16: *Input Bias, Offset Currents vs. Common Mode Input Voltage.*

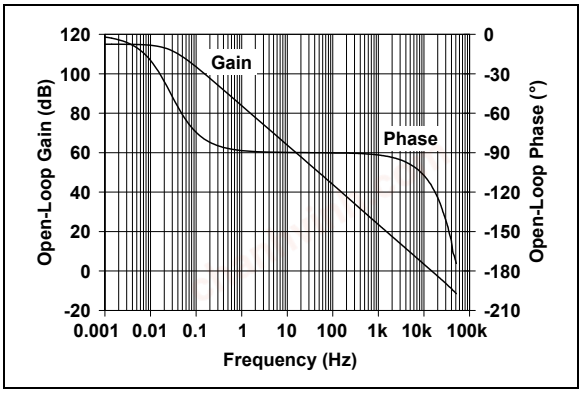

FIGURE 2-14: *Open-Loop Gain, Phase vs. Frequency.*

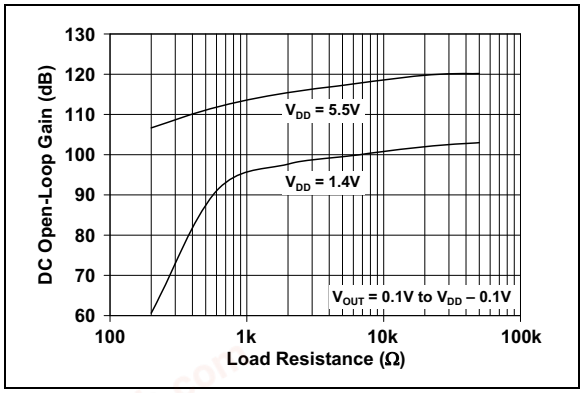

FIGURE 2-17: *DC Open-Loop Gain vs. Load Resistance.*

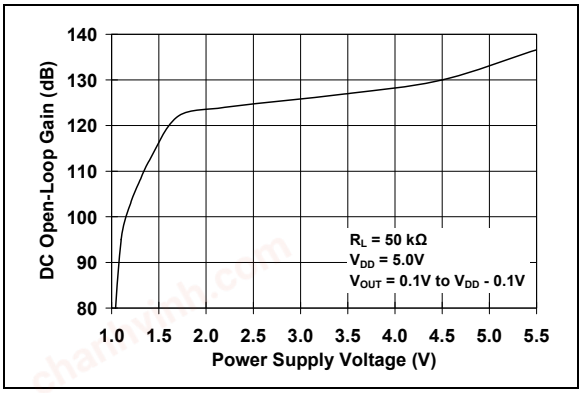

FIGURE 2-15: *DC Open-Loop Gain vs. Power Supply Voltage.*

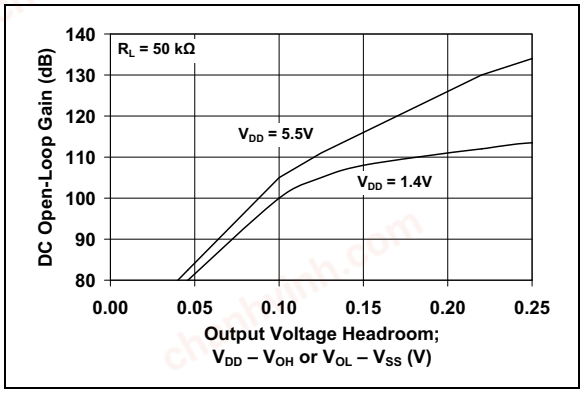

FIGURE 2-18: *DC Open-Loop Gain vs. Output Voltage Headroom.*

chanhvinh.com

Note: Unless otherwise indicated, T_A = +25°C, V_{DD} = +1.4V to +6.0V, V_{SS} = GND, V_{CM} = V_{DD}/2, V_{OUT} ≈ V_{DD}/2, V_L = V_{DD}/2, R_L = 1 MΩ to V_L, and C_L = 60 pF.

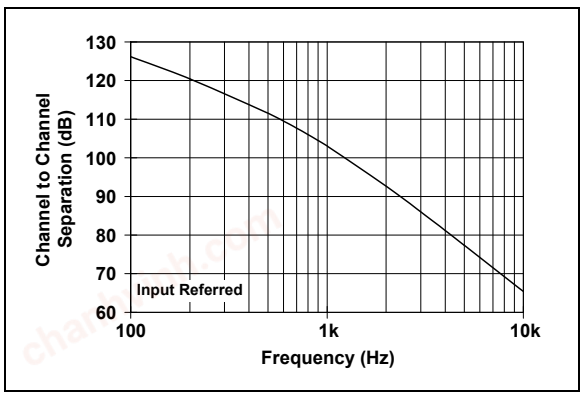

FIGURE 2-19: *Channel-to-Channel Separation vs. Frequency (MCP6042 and MCP6044 only).*

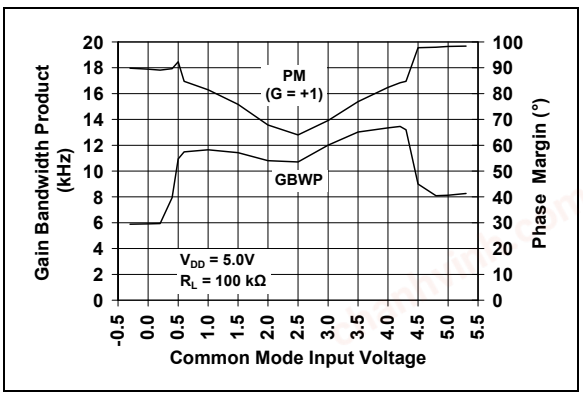

FIGURE 2-22: *Gain Bandwidth Product, Phase Margin vs. Common Mode Input Voltage.*

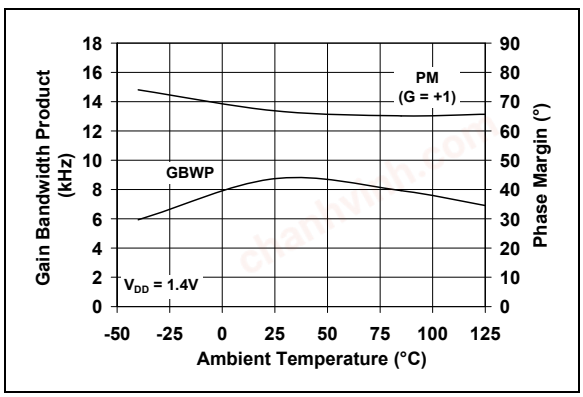

FIGURE 2-20: *Gain Bandwidth Product, Phase Margin vs. Ambient Temperature with V_{DD} = 1.4V.*

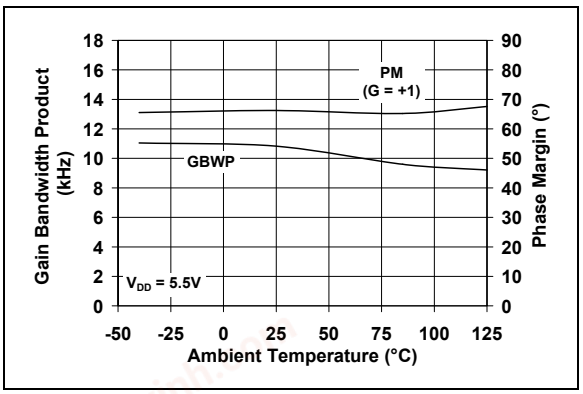

FIGURE 2-23: *Gain Bandwidth Product, Phase Margin vs. Ambient Temperature with V_{DD} = 5.5V.*

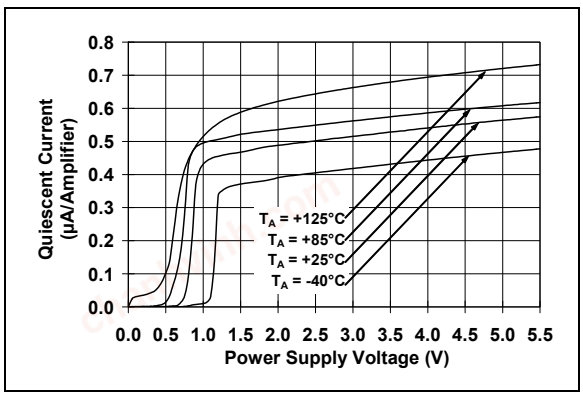

FIGURE 2-21: *Quiescent Current vs. Power Supply Voltage.*

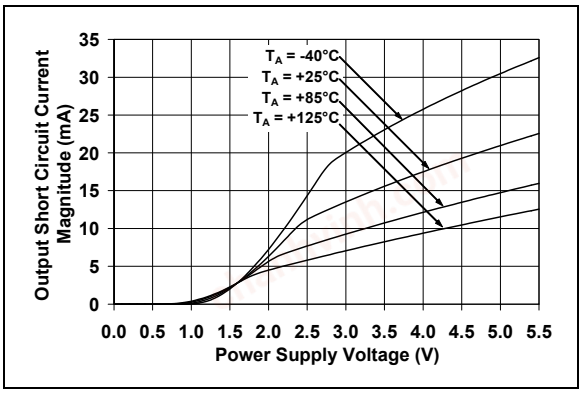

FIGURE 2-24: *Output Short Circuit Current vs. Power Supply Voltage.*

© 2008 Microchip Technology Inc.

chanhvinh.com

Note: Unless otherwise indicated, T_A = +25°C, V_{DD} = +1.4V to +6.0V, V_{SS} = GND, V_{CM} = V_{DD}/2, V_{OUT} ≈ V_{DD}/2, V_L = V_{DD}/2, R_L = 1 MΩ to V_L, and C_L = 60 pF.

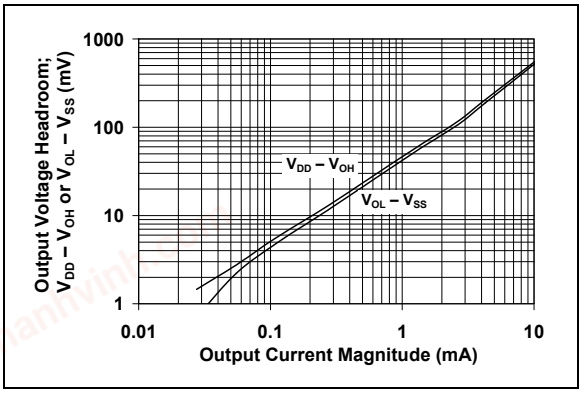

FIGURE 2-25: *Output Voltage Headroom vs. Output Current Magnitude.*

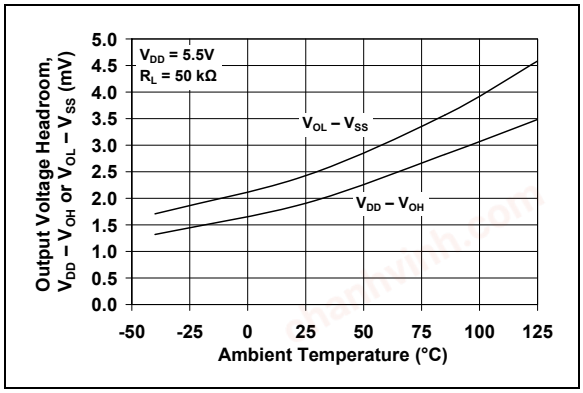

FIGURE 2-28: *Output Voltage Headroom vs. Ambient Temperature.*

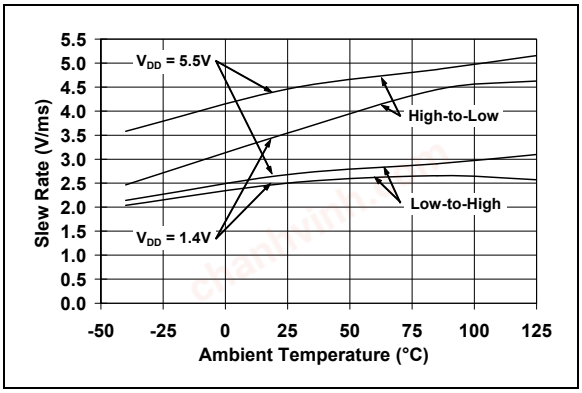

FIGURE 2-26: *Slew Rate vs. Ambient Temperature.*

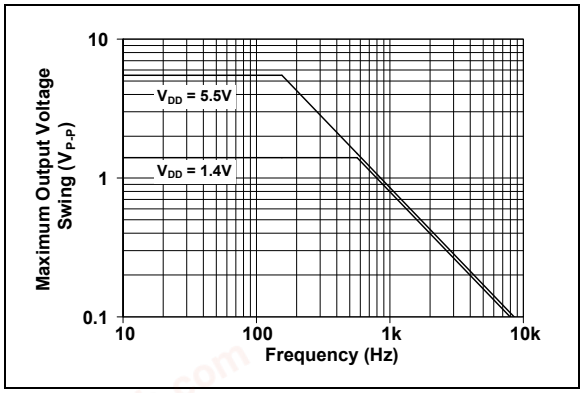

FIGURE 2-29: *Maximum Output Voltage Swing vs. Frequency.*

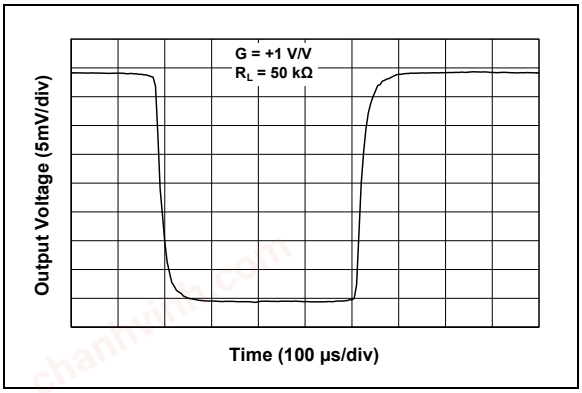

FIGURE 2-27: *Small Signal Non-inverting Pulse Response.*

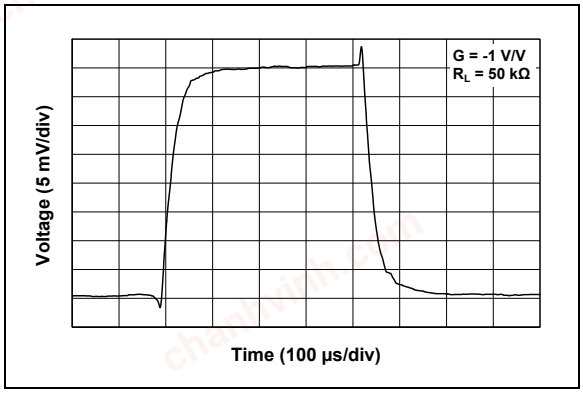

FIGURE 2-30: *Small Signal Inverting Pulse Response.*

chanhvinh.com

Note: Unless otherwise indicated, T_A = +25°C, V_{DD} = +1.4V to +6.0V, V_{SS} = GND, V_{CM} = V_{DD}/2, V_{OUT} ≈ V_{DD}/2, V_L = V_{DD}/2, R_L = 1 MΩ to V_L, and C_L = 60 pF.

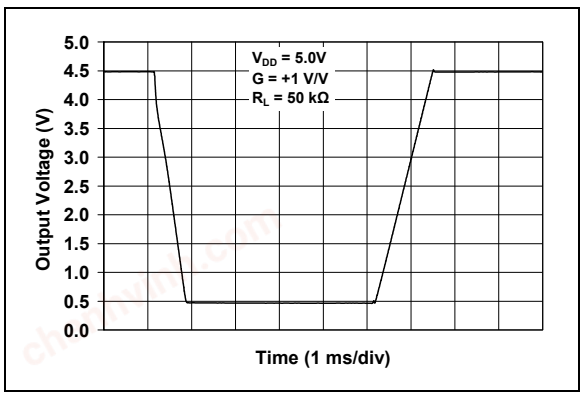

FIGURE 2-31: *Large Signal Non-inverting Pulse Response.*

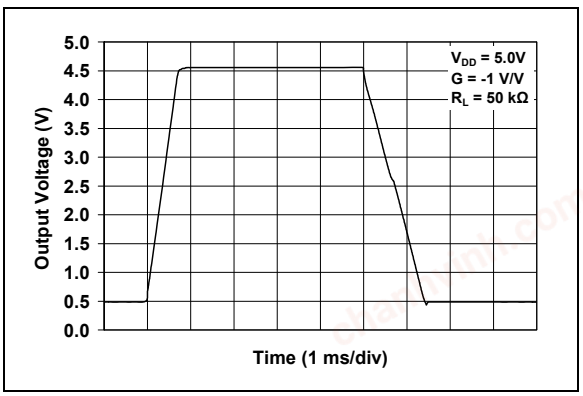

FIGURE 2-34: *Large Signal Inverting Pulse Response.*

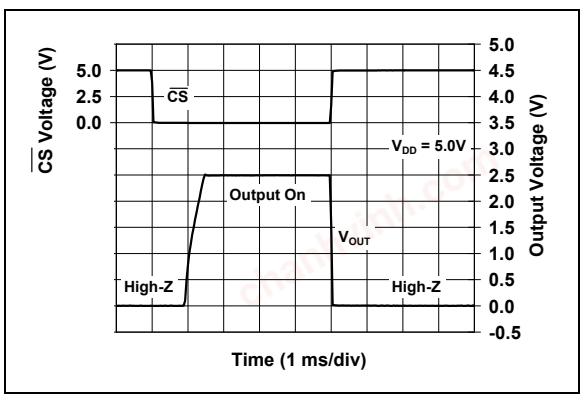

FIGURE 2-32: *Chip Select ($\overline{CS}$) to Amplifier Output Response Time (MCP6043 only).*

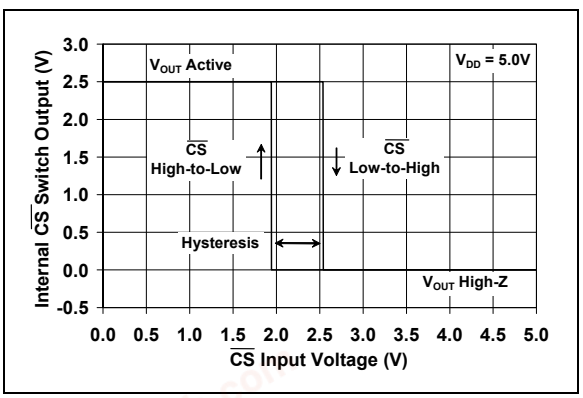

FIGURE 2-35: *Chip Select ($\overline{CS}$) Hysteresis (MCP6043 only).*

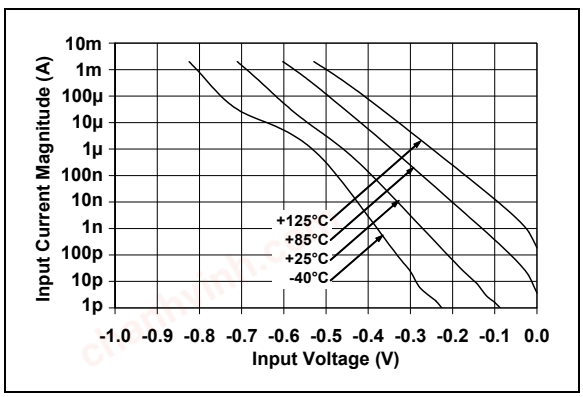

FIGURE 2-33: *Input Current vs. Input Voltage (below V_{SS}).*

© 2008 Microchip Technology Inc.

chanhvinh.com

3.0 PIN DESCRIPTIONS

Descriptions of the pins are listed in Table 3-1.

TABLE 3-1: PIN FUNCTION TABLE

MCP6041		MCP6042	MCP6043		MCP6044	Symbol	Description
PDIP, SOIC, MSOP	SOT-23-5	PDIP, SOIC, MSOP	PDIP, SOIC, MSOP	SOT-23-6	PDIP, SOIC, TSSOP		
6	1	1	6	1	1	V_{OUT}, V_{OUTA}	Analog Output (op amp A)
2	4	2	2	4	2	$V_{IN}-$, $V_{INA}-$	Inverting Input (op amp A)
3	3	3	3	3	3	$V_{IN}+$, $V_{INA}+$	Non-inverting Input (op amp A)
7	5	8	7	6	4	V_{DD}	Positive Power Supply
—	—	5	—	—	5	$V_{INB}+$	Non-inverting Input (op amp B)
—	—	6	—	—	6	$V_{INB}-$	Inverting Input (op amp B)
—	—	7	—	—	7	V_{OUTB}	Analog Output (op amp B)
—	—	—	—	—	8	V_{OUTC}	Analog Output (op amp C)
—	—	—	—	—	9	$V_{INC}-$	Inverting Input (op amp C)
—	—	—	—	—	10	$V_{INC}+$	Non-inverting Input (op amp C)
4	2	4	4	2	11	V_{SS}	Negative Power Supply
—	—	—	—	—	12	$V_{IND}+$	Non-inverting Input (op amp D)
—	—	—	—	—	13	$V_{IND}-$	Inverting Input (op amp D)
—	—	—	—	—	14	V_{OUTD}	Analog Output (op amp D)
—	—	—	8	5	—	$\overline{CS}$	Chip Select
1, 5, 8	—	—	1, 5	—	—	NC	No Internal Connection

3.1 Analog Outputs

The output pins are low-impedance voltage sources.

3.2 Analog Inputs

The non-inverting and inverting inputs are high-impedance CMOS inputs with low bias currents.

3.3 Chip Select Digital Input

This is a CMOS, Schmitt-triggered input that places the part into a low power mode of operation.

3.4 Power Supply Pins

The positive power supply pin (V_{DD}) is 1.4V to 6.0V higher than the negative power supply pin (V_{SS}). For normal operation, the other pins are at voltages between V_{SS} and V_{DD}.

Typically, these parts are used in a single (positive) supply configuration. In this case, V_{SS} is connected to ground and V_{DD} is connected to the supply. V_{DD} will need bypass capacitors.

chanhvinh.com

4.0 APPLICATIONS INFORMATION

The MCP6041/2/3/4 family of op amps is manufactured using Microchip's state of the art CMOS process These op amps are unity gain stable and suitable for a wide range of general purpose, low power applications.

See Microchip's related MCP6141/2/3/4 family of op amps for applications, at a gain of 10 V/V or higher, needing greater bandwidth.

4.1 Rail-to-Rail Input

4.1.1 PHASE REVERSAL

The MCP6041/2/3/4 op amps are designed to not exhibit phase inversion when the input pins exceed the supply voltages. Figure 2-10 shows an input voltage exceeding both supplies with no phase inversion.

4.1.2 INPUT VOLTAGE AND CURRENT LIMITS

The ESD protection on the inputs can be depicted as shown in Figure 4-1. This structure was chosen to protect the input transistors, and to minimize input bias current (I_B). The input ESD diodes clamp the inputs when they try to go more than one diode drop below V_{SS}. They also clamp any voltages that go too far above V_{DD}; their breakdown voltage is high enough to allow normal operation, and low enough to bypass quick ESD events within the specified limits.

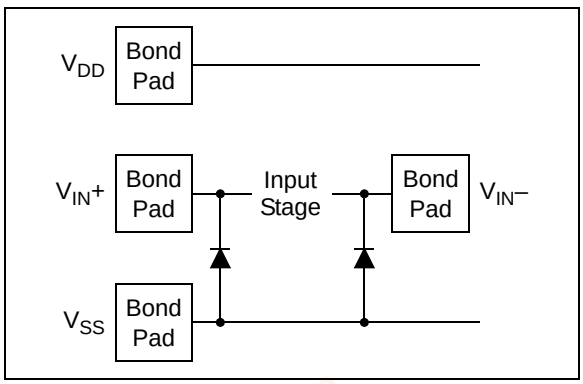

FIGURE 4-1: *Simplified Analog Input ESD Structures.*

In order to prevent damage and/or improper operation of these amplifiers, the circuit must limit the currents (and voltages) at the input pins (see **Absolute Maximum Ratings †** at the beginning of **Section 1.0 "Electrical Characteristics"**). Figure 4-2 shows the recommended approach to protecting these inputs. The internal ESD diodes prevent the input pins (V_{IN}+ and V_{IN}–) from going too far below ground, and the resistors R_1 and R_2 limit the possible current drawn out of the input pins. Diodes D_1 and D_2 prevent the input pins (V_{IN}+ and V_{IN}–) from going too far above V_{DD}, and dump any currents onto V_{DD}. When implemented as shown, resistors R_1 and R_2 also limit the current through D_1 and D_2.

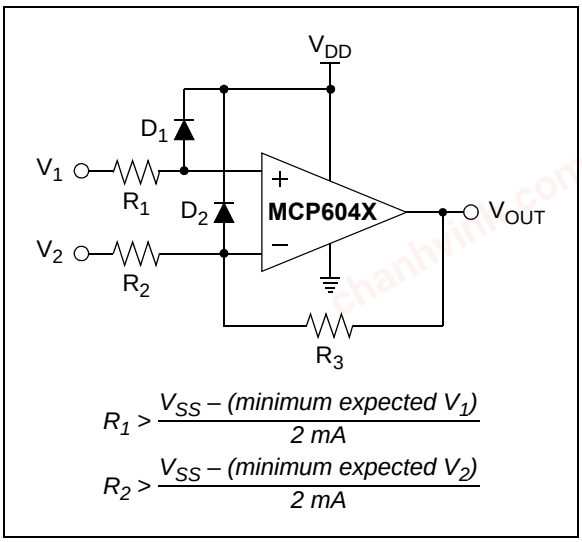

FIGURE 4-2: *Protecting the Analog Inputs.*

It is also possible to connect the diodes to the left of the resistor R_1 and R_2. In this case, the currents through the diodes D_1 and D_2 need to be limited by some other mechanism. The resistors then serve as in-rush current limiters; the DC current into the input pins (V_{IN}+ and V_{IN}–) should be very small.

A significant amount of current can flow out of the inputs (through the ESD diodes) when the common mode voltage (V_{CM}) is below ground (V_{SS}); see Figure 2-33. Applications that are high impedance may need to limit the useable voltage range.

4.1.3 NORMAL OPERATION

The input stage of the MCP6041/2/3/4 op amps uses two differential input stages in parallel. One operates at a low common mode input voltage (V_{CM}), while the other operates at a high V_{CM}. With this topology, the device operates with a V_{CM} up to 300 mV above V_{DD} and 300 mV below V_{SS}. The input offset voltage is measured at $V_{CM} = V_{SS} - 0.3V$ and $V_{DD} + 0.3V$ to ensure proper operation.

There are two transitions in input behavior as V_{CM} is changed. The first occurs, when V_{CM} is near $V_{SS} + 0.4V$, and the second occurs when V_{CM} is near $V_{DD} - 0.5V$ (see Figure 2-3 and Figure 2-6). For the best distortion performance with non-inverting gains, avoid these regions of operation.

© 2008 Microchip Technology Inc.

chanhvinh.com

4.2 Rail-to-Rail Output

There are two specifications that describe the output swing capability of the MCP6041/2/3/4 family of op amps. The first specification (Maximum Output Voltage Swing) defines the absolute maximum swing that can be achieved under the specified load condition. Thus, the output voltage swings to within 10 mV of either supply rail with a 50 kΩ load to $V_{DD}/2$. Figure 2-10 shows how the output voltage is limited when the input goes beyond the linear region of operation.

The second specification that describes the output swing capability of these amplifiers is the Linear Output Voltage Range. This specification defines the maximum output swing that can be achieved while the amplifier still operates in its linear region. To verify linear operation in this range, the large signal DC Open-Loop Gain (A_{OL}) is measured at points inside the supply rails. The measurement must meet the specified A_{OL} condition in the specification table.

4.3 Output Loads and Battery Life

The MCP6041/2/3/4 op amp family has outstanding quiescent current, which supports battery-powered applications. There is minimal quiescent current glitching when Chip Select ($\overline{CS}$) is raised or lowered. This prevents excessive current draw, and reduced battery life, when the part is turned off or on.

Heavy resistive loads at the output can cause excessive battery drain. Driving a DC voltage of 2.5V across a 100 kΩ load resistor will cause the supply current to increase by 25 µA, depleting the battery 43 times as fast as I_Q (0.6 µA, typical) alone.

High frequency signals (fast edge rate) across capacitive loads will also significantly increase supply current. For instance, a 0.1 µF capacitor at the output presents an AC impedance of 15.9 kΩ ($1/2\pi fC$) to a 100 Hz sinewave. It can be shown that the average power drawn from the battery by a 5.0 V_{p-p} sinewave (1.77 V_{rms}), under these conditions, is

EQUATION 4-1:

$$\begin{aligned} P_{Supply} &= (V_{DD} - V_{SS})\,(I_Q + V_{L(p-p)}\,f\,C_L) \\ &= (5V)(0.6\,\mu A + 5.0V_{p-p} \cdot 100Hz \cdot 0.1\mu F) \\ &= 3.0\,\mu W + 50\,\mu W \end{aligned}$$

This will drain the battery 18 times as fast as I_Q alone.

4.4 Capacitive Loads

Driving large capacitive loads can cause stability problems for voltage feedback op amps. As the load capacitance increases, the feedback loop's phase margin decreases and the closed-loop bandwidth is reduced. This produces gain peaking in the frequency response, with overshoot and ringing in the step response. A unity gain buffer (G = +1) is the most sensitive to capacitive loads, although all gains show the same general behavior.

When driving large capacitive loads with these op amps (e.g., > 60 pF when G = +1), a small series resistor at the output (R_{ISO} in Figure 4-3) improves the feedback loop's phase margin (stability) by making the output load resistive at higher frequencies. The bandwidth will be generally lower than the bandwidth with no capacitive load.

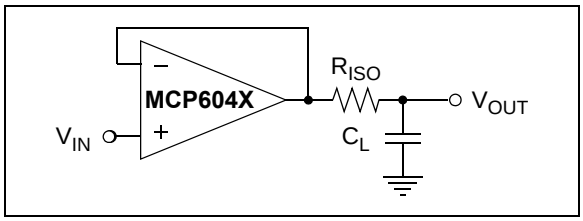

FIGURE 4-3: *Output Resistor, R_{ISO} stabilizes large capacitive loads.*

Figure 4-4 gives recommended R_{ISO} values for different capacitive loads and gains. The x-axis is the normalized load capacitance (C_L/G_N), where G_N is the circuit's noise gain. For non-inverting gains, G_N and the Signal Gain are equal. For inverting gains, G_N is 1+|Signal Gain| (e.g., -1 V/V gives G_N = +2 V/V).

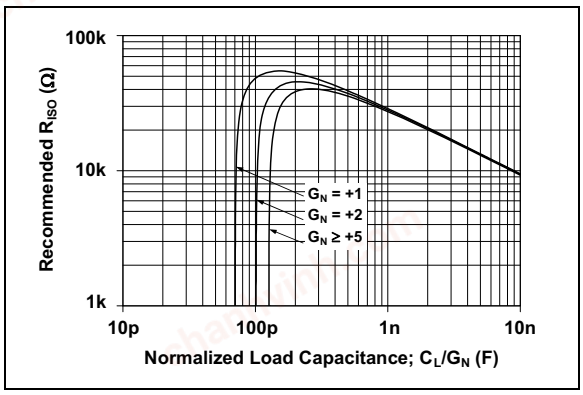

FIGURE 4-4: *Recommended R_{ISO} Values for Capacitive Loads.*

After selecting R_{ISO} for your circuit, double check the resulting frequency response peaking and step response overshoot. Modify R_{ISO}'s value until the response is reasonable. Bench evaluation and simulations with the MCP6041/2/3/4 SPICE macro model are helpful.

© 2008 Microchip Technology Inc.

chanhvinh.com

4.5 MCP6043 Chip Select

The MCP6043 is a single op amp with Chip Select ($\overline{CS}$). When $\overline{CS}$ is pulled high, the supply current drops to 50 nA (typical) and flows through the $\overline{CS}$ pin to V_{SS}. When this happens, the amplifier output is put into a high impedance state. By pulling $\overline{CS}$ low, the amplifier is enabled. If the $\overline{CS}$ pin is left floating, the amplifier may not operate properly. Figure 1-1 shows the output voltage and supply current response to a $\overline{CS}$ pulse.

4.6 Supply Bypass

With this family of operational amplifiers, the power supply pin (V_{DD} for single supply) should have a local bypass capacitor (i.e., 0.01 µF to 0.1 µF) within 2 mm for good high frequency performance. It can use a bulk capacitor (i.e., 1 µF or larger) within 100 mm to provide large, slow currents. This bulk capacitor is not required for most applications and can be shared with nearby analog parts.

4.7 Unused Op Amps

An unused op amp in a quad package (MCP6044) should be configured as shown in Figure 4-5. These circuits prevent the output from toggling and causing crosstalk. Circuits A sets the op amp at its minimum noise gain. The resistor divider produces any desired reference voltage within the output voltage range of the op amp; the op amp buffers that reference voltage. Circuit B uses the minimum number of components and operates as a comparator, but it may draw more current.

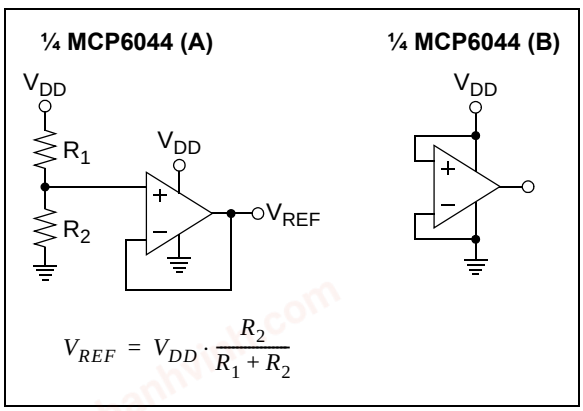

FIGURE 4-5: *Unused Op Amps.*

4.8 PCB Surface Leakage

In applications where low input bias current is critical, printed circuit board (PCB) surface leakage effects need to be considered. Surface leakage is caused by humidity, dust or other contamination on the board. Under low humidity conditions, a typical resistance between nearby traces is $10^{12}\Omega$. A 5V difference would cause 5 pA of current to flow, which is greater than the MCP6041/2/3/4 family's bias current at +25°C (1 pA, typical).

The easiest way to reduce surface leakage is to use a guard ring around sensitive pins (or traces). The guard ring is biased at the same voltage as the sensitive pin. Figure 4-6 shows an example of this type of layout.

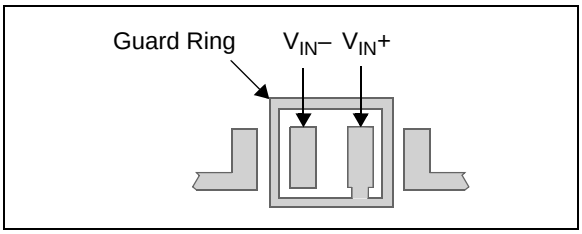

FIGURE 4-6: *Example Guard Ring Layout for Inverting Gain.*

1. Non-inverting Gain and Unity Gain Buffer:
   a) Connect the non-inverting pin ($V_{IN}+$) to the input with a wire that does not touch the PCB surface.
   b) Connect the guard ring to the inverting input pin ($V_{IN}–$). This biases the guard ring to the common mode input voltage.
2. Inverting Gain and Transimpedance Gain (convert current to voltage, such as photo detectors) amplifiers:
   a) Connect the guard ring to the non-inverting input pin ($V_{IN}+$). This biases the guard ring to the same reference voltage as the op amp (e.g., $V_{DD}/2$ or ground).
   b) Connect the inverting pin ($V_{IN}–$) to the input with a wire that does not touch the PCB surface.

© 2008 Microchip Technology Inc.

chanhvinh.com

4.9 Application Circuits

4.9.1 BATTERY CURRENT SENSING

The MCP6041/2/3/4 op amps' Common Mode Input Range, which goes 0.3V beyond both supply rails, supports their use in high side and low side battery current sensing applications. The very low quiescent current (0.6 µA, typical) help prolong battery life, and the rail-to-rail output supports detection low currents.

Figure 4-7 shows a high side battery current sensor circuit. The 10Ω resistor is sized to minimize power losses. The battery current (I_{DD}) through the 10Ω resistor causes its top terminal to be more negative than the bottom terminal. This keeps the common mode input voltage of the op amp below V_{DD}, which is within its allowed range. The output of the op amp will also be below V_{DD}, which is within its Maximum Output Voltage Swing specification.

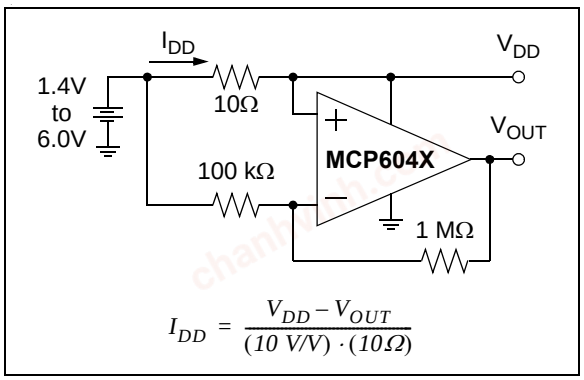

FIGURE 4-7: *High Side Battery Current Sensor.*

4.9.2 INSTRUMENTATION AMPLIFIER

The MCP6041/2/3/4 op amp is well suited for conditioning sensor signals in battery-powered applications. Figure 4-8 shows a two op amp instrumentation amplifier, using the MCP6042, that works well for applications requiring rejection of common mode noise at higher gains. The reference voltage (V_{REF}) is supplied by a low impedance source. In single supply applications, V_{REF} is typically $V_{DD}/2$.

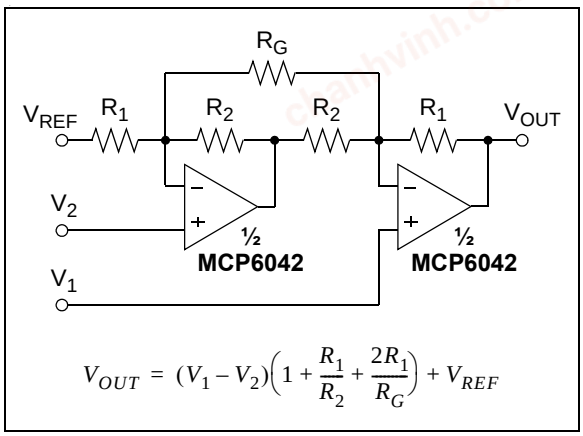

FIGURE 4-8: *Two Op Amp Instrumentation Amplifier.*

chanhvinh.com

5.0 DESIGN AIDS

Microchip provides the basic design tools needed for the MCP6041/2/3/4 family of op amps.

5.1 SPICE Macro Model

The latest SPICE macro model for the MCP6041/2/3/4 op amps is available on the Microchip web site at www.microchip.com. This model is intended to be an initial design tool that works well in the op amp's linear region of operation over the temperature range. See the model file for information on its capabilities.

Bench testing is a very important part of any design and cannot be replaced with simulations. Also, simulation results using this macro model need to be validated by comparing them to the data sheet specifications and characteristic curves.

5.2 FilterLab® Software

Microchip's FilterLab® software is an innovative software tool that simplifies analog active filter (using op amps) design. Available at no cost from the Microchip web site at www.microchip.com/filterlab, the FilterLab design tool provides full schematic diagrams of the filter circuit with component values. It also outputs the filter circuit in SPICE format, which can be used with the macro model to simulate actual filter performance.

5.3 Mindi™ Circuit Designer & Simulator

Microchip's Mindi™ Circuit Designer & Simulator aids in the design of various circuits useful for active filter, amplifier and power-management applications. It is a free online circuit designer & simulator available from the Microchip web site at www.microchip.com/mindi. This interactive circuit designer & simulator enables designers to quickly generate circuit diagrams, simulate circuits. Circuits developed using the Mindi Circuit Designer & Simulator can be downloaded to a personal computer or workstation.

5.4 MAPS (Microchip Advanced Part Selector)

MAPS is a software tool that helps semiconductor professionals efficiently identify Microchip devices that fit a particular design requirement. Available at no cost from the Microchip website at www.microchip.com/maps, the MAPS is an overall selection tool for Microchip's product portfolio that includes Analog, Memory, MCUs and DSCs. Using this tool you can define a filter to sort features for a parametric search of devices and export side-by-side technical comparasion reports. Helpful links are also provided for Datasheets, Purchase, and Sampling of Microchip parts.

5.5 Analog Demonstration and Evaluation Boards

Microchip offers a broad spectrum of Analog Demonstration and Evaluation Boards that are designed to help you achieve faster time to market. For a complete listing of these boards and their corresponding user's guides and technical information, visit the Microchip web site at www.microchip.com/analogtools.

Two of our boards that are especially useful are:

- **P/N SOIC8EV:** *8-Pin SOIC/MSOP/TSSOP/DIP Evaluation Board*
- **P/N SOIC14EV:** *14-Pin SOIC/TSSOP/DIP Evaluation Board*

5.6 Application Notes

The following Microchip Application Notes are available on the Microchip web site at www.microchip. com/appnotes and are recommended as supplemental reference resources.

ADN003: *"Select the Right Operational Amplifier for your Filtering Circuits"*, DS21821

AN722: *"Operational Amplifier Topologies and DC Specifications"*, DS00722

AN723: *"Operational Amplifier AC Specifications and Applications"*, DS00723

AN884: *"Driving Capacitive Loads With Op Amps"*, DS00884

AN990: *"Analog Sensor Conditioning Circuits – An Overview"*, DS00990

These application notes and others are listed in the design guide:

"Signal Chain Design Guide", DS21825

© 2008 Microchip Technology Inc.

chanhvinh.com

6.0 PACKAGING INFORMATION

6.1 Package Marking Information

5-Lead SOT-23 (**MCP6041**)

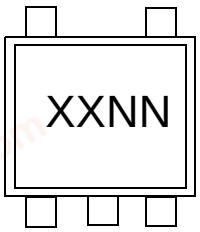

Device	I-Temp Code	E-Temp Code
MCP6041/T-E/OT	SPNN	SBNN

Example:

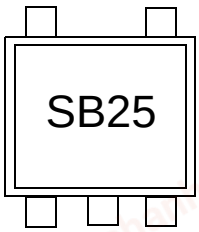

6-Lead SOT-23 (**MCP6043**)

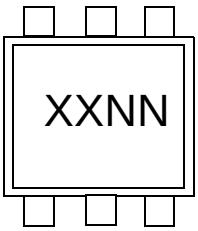

Device	I-Temp Code	E-Temp Code
MCP6043T-E/CH	SCNN	SDNN

Example:

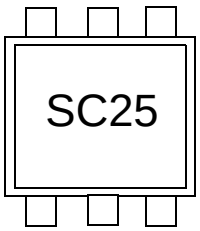

8-Lead MSOP



Example:



8-Lead PDIP (300 mil)

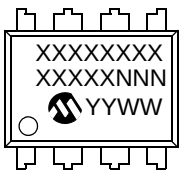

Example:

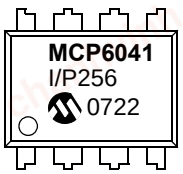

OR

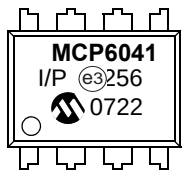

8-Lead SOIC (150 mil)

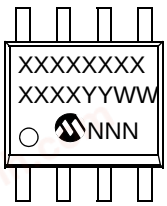

Example:

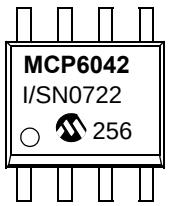

OR



Legend:	XX...X	Customer-specific information
	Y	Year code (last digit of calendar year)
	YY	Year code (last 2 digits of calendar year)
	WW	Week code (week of January 1 is week ‘01’)
	NNN	Alphanumeric traceability code
	(e3)	Pb-free JEDEC designator for Matte Tin (Sn)
	*	This package is Pb-free. The Pb-free JEDEC designator ((e3)) can be found on the outer packaging for this package.

Note: In the event the full Microchip part number cannot be marked on one line, it will be carried over to the next line, thus limiting the number of available characters for customer-specific information.

chanhvinh.com

Package Marking Information (Continued)

14-Lead PDIP (300 mil) (**MCP6044**)

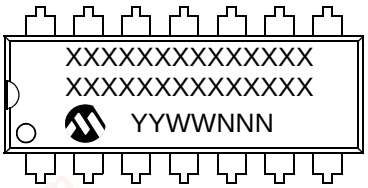

Example:

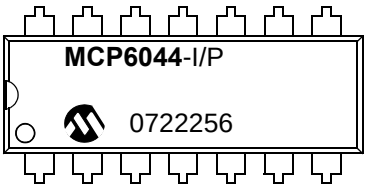

OR

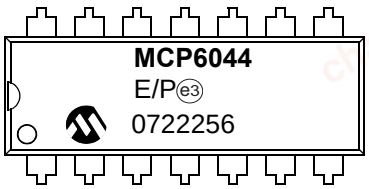

14-Lead SOIC (150 mil) (**MCP6044**)

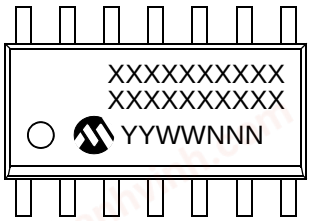

Example:

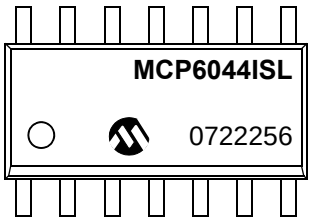

OR

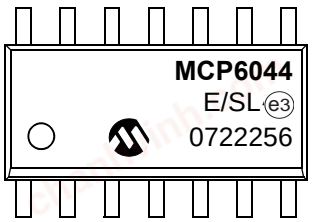

14-Lead TSSOP (**MCP6044**)

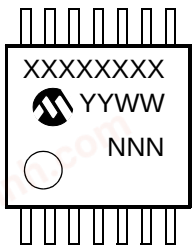

Example:

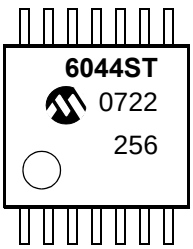

OR

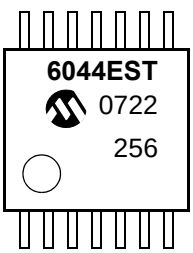

© 2008 Microchip Technology Inc.

chanhvinh.com

5-Lead Plastic Small Outline Transistor (OT) [SOT-23]

Note: For the most current package drawings, please see the Microchip Packaging Specification located at http://www.microchip.com/packaging

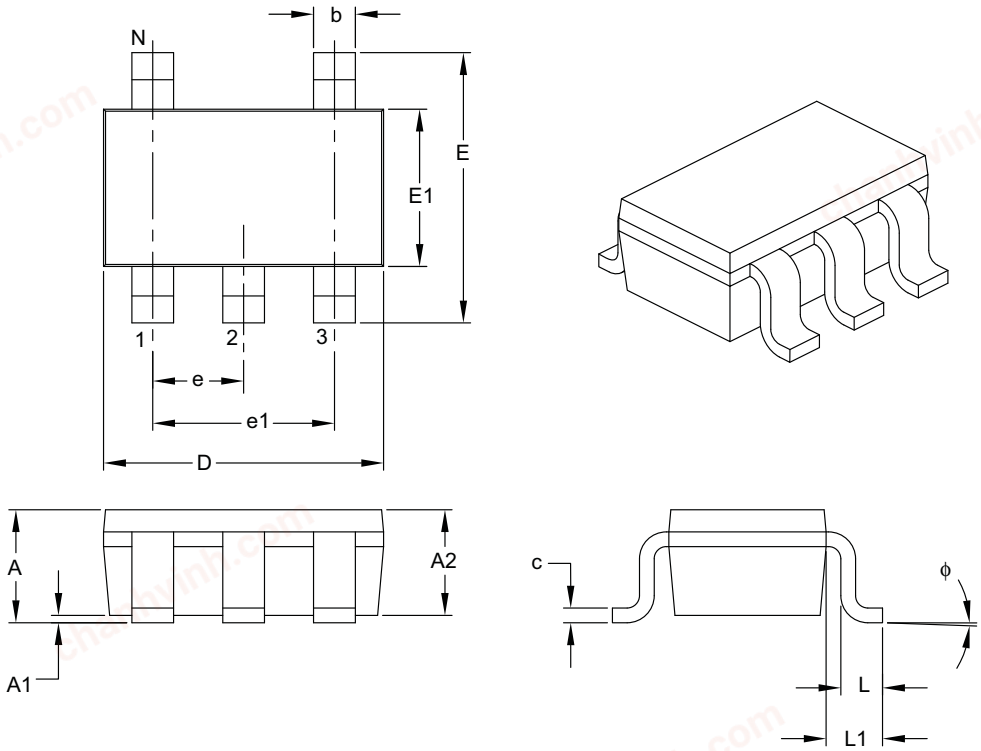

Units		MILLIMETERS		
Dimension Limits		MIN	NOM	MAX
Number of Pins	N		5	
Lead Pitch	e		0.95 BSC	
Outside Lead Pitch	e1		1.90 BSC	
Overall Height	A	0.90	–	1.45
Molded Package Thickness	A2	0.89	–	1.30
Standoff	A1	0.00	–	0.15
Overall Width	E	2.20	–	3.20
Molded Package Width	E1	1.30	–	1.80
Overall Length	D	2.70	–	3.10
Foot Length	L	0.10	–	0.60
Footprint	L1	0.35	–	0.80
Foot Angle	ϕ	0°	–	30°
Lead Thickness	c	0.08	–	0.26
Lead Width	b	0.20	–	0.51

Notes:

1. Dimensions D and E1 do not include mold flash or protrusions. Mold flash or protrusions shall not exceed 0.127 mm per side.
2. Dimensioning and tolerancing per ASME Y14.5M.

BSC: Basic Dimension. Theoretically exact value shown without tolerances.

Microchip Technology Drawing C04-091B

chanhvinh.com

6-Lead Plastic Small Outline Transistor (CH) [SOT-23]

Note: For the most current package drawings, please see the Microchip Packaging Specification located at http://www.microchip.com/packaging

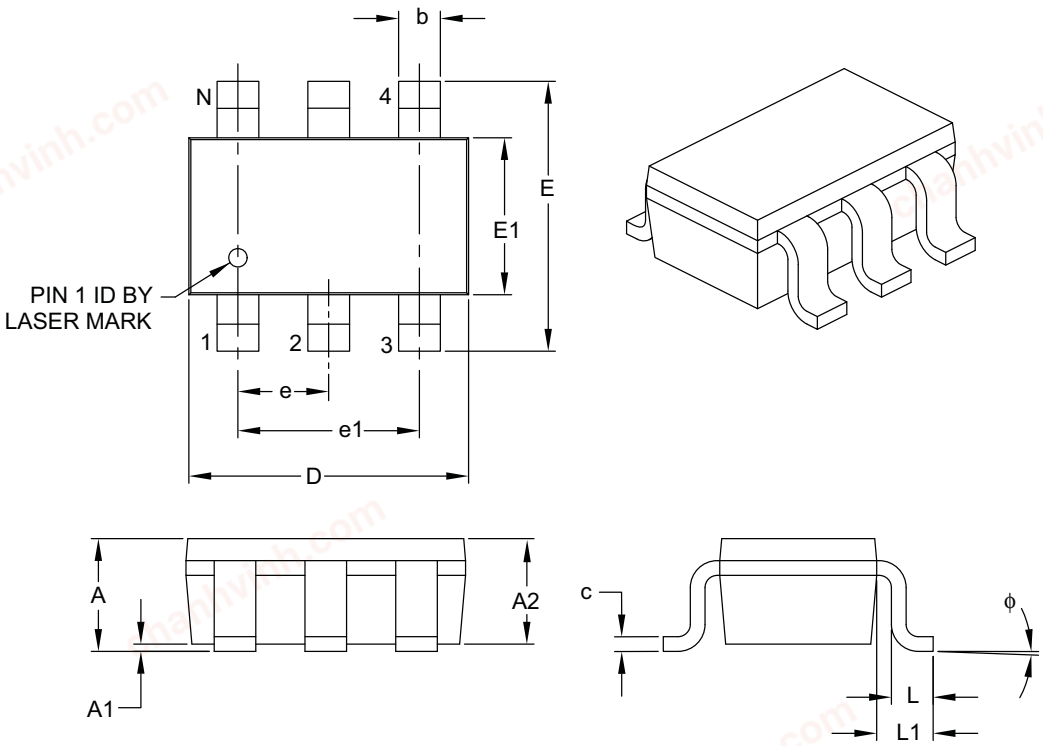

Units		MILLIMETERS		
Dimension Limits		MIN	NOM	MAX
Number of Pins	N		6	
Pitch	e		0.95 BSC	
Outside Lead Pitch	e1		1.90 BSC	
Overall Height	A	0.90	–	1.45
Molded Package Thickness	A2	0.89	–	1.30
Standoff	A1	0.00	–	0.15
Overall Width	E	2.20	–	3.20
Molded Package Width	E1	1.30	–	1.80
Overall Length	D	2.70	–	3.10
Foot Length	L	0.10	–	0.60
Footprint	L1	0.35	–	0.80
Foot Angle	ϕ	0°	–	30°
Lead Thickness	c	0.08	–	0.26
Lead Width	b	0.20	–	0.51

Notes:

1. Dimensions D and E1 do not include mold flash or protrusions. Mold flash or protrusions shall not exceed 0.127 mm per side.
2. Dimensioning and tolerancing per ASME Y14.5M.

BSC: Basic Dimension. Theoretically exact value shown without tolerances.

Microchip Technology Drawing C04-028B

© 2008 Microchip Technology Inc.

chanhvinh.com

8-Lead Plastic Micro Small Outline Package (MS) [MSOP]

Note: For the most current package drawings, please see the Microchip Packaging Specification located at http://www.microchip.com/packaging

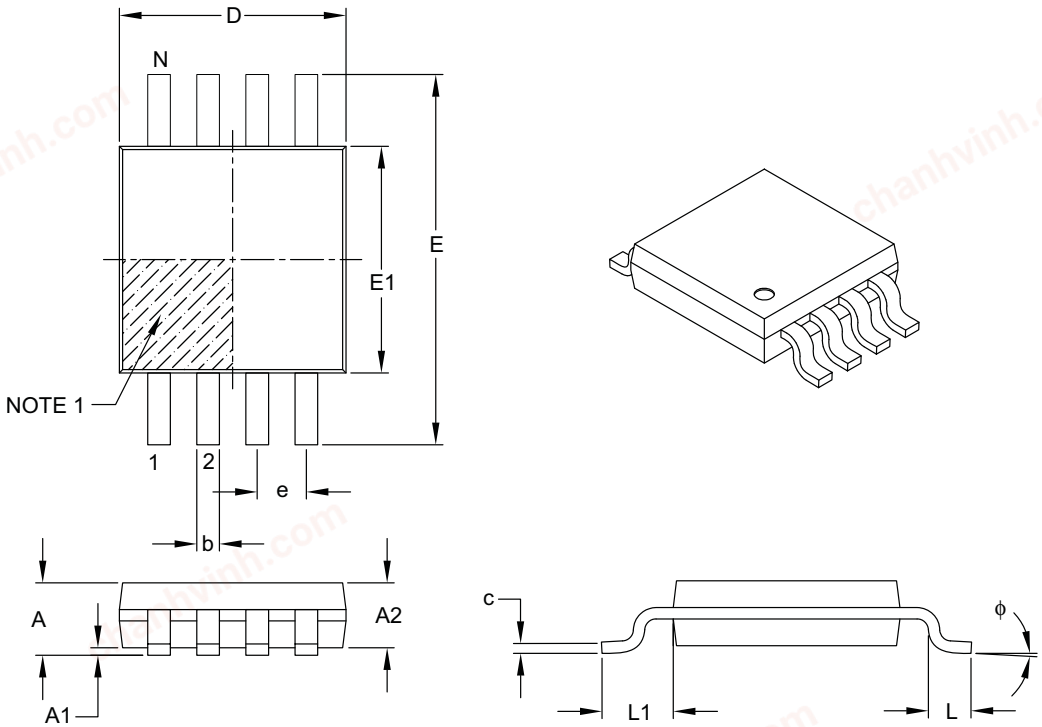

Units		MILLIMETERS		
Dimension Limits		MIN	NOM	MAX
Number of Pins	N		8	
Pitch	e		0.65 BSC	
Overall Height	A	–	–	1.10
Molded Package Thickness	A2	0.75	0.85	0.95
Standoff	A1	0.00	–	0.15
Overall Width	E		4.90 BSC	
Molded Package Width	E1		3.00 BSC	
Overall Length	D		3.00 BSC	
Foot Length	L	0.40	0.60	0.80
Footprint	L1		0.95 REF	
Foot Angle	ϕ	0°	–	8°
Lead Thickness	c	0.08	–	0.23
Lead Width	b	0.22	–	0.40

Notes:

1. Pin 1 visual index feature may vary, but must be located within the hatched area.
2. Dimensions D and E1 do not include mold flash or protrusions. Mold flash or protrusions shall not exceed 0.15 mm per side.
3. Dimensioning and tolerancing per ASME Y14.5M.

BSC: Basic Dimension. Theoretically exact value shown without tolerances.
REF: Reference Dimension, usually without tolerance, for information purposes only.

Microchip Technology Drawing C04-111B

chanhvinh.com

8-Lead Plastic Dual In-Line (P) – 300 mil Body [PDIP]

Note: For the most current package drawings, please see the Microchip Packaging Specification located at http://www.microchip.com/packaging

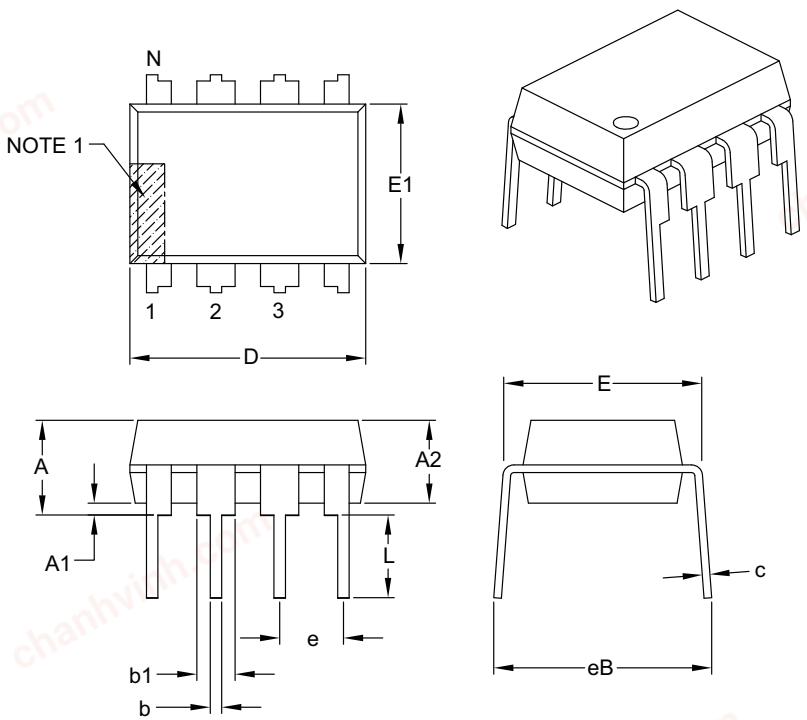

Units		INCHES		
Dimension Limits		MIN	NOM	MAX
Number of Pins	N		8	
Pitch	e		.100 BSC	
Top to Seating Plane	A	–	–	.210
Molded Package Thickness	A2	.115	.130	.195
Base to Seating Plane	A1	.015	–	–
Shoulder to Shoulder Width	E	.290	.310	.325
Molded Package Width	E1	.240	.250	.280
Overall Length	D	.348	.365	.400
Tip to Seating Plane	L	.115	.130	.150
Lead Thickness	c	.008	.010	.015
Upper Lead Width	b1	.040	.060	.070
Lower Lead Width	b	.014	.018	.022
Overall Row Spacing §	eB	–	–	.430

Notes:

1. Pin 1 visual index feature may vary, but must be located with the hatched area.
2. § Significant Characteristic.
3. Dimensions D and E1 do not include mold flash or protrusions. Mold flash or protrusions shall not exceed .010" per side.
4. Dimensioning and tolerancing per ASME Y14.5M.

   BSC: Basic Dimension. Theoretically exact value shown without tolerances.

Microchip Technology Drawing C04-018B

© 2008 Microchip Technology Inc.

chanhvinh.com

14-Lead Plastic Dual In-Line (P) – 300 mil Body [PDIP]

Note: For the most current package drawings, please see the Microchip Packaging Specification located at http://www.microchip.com/packaging

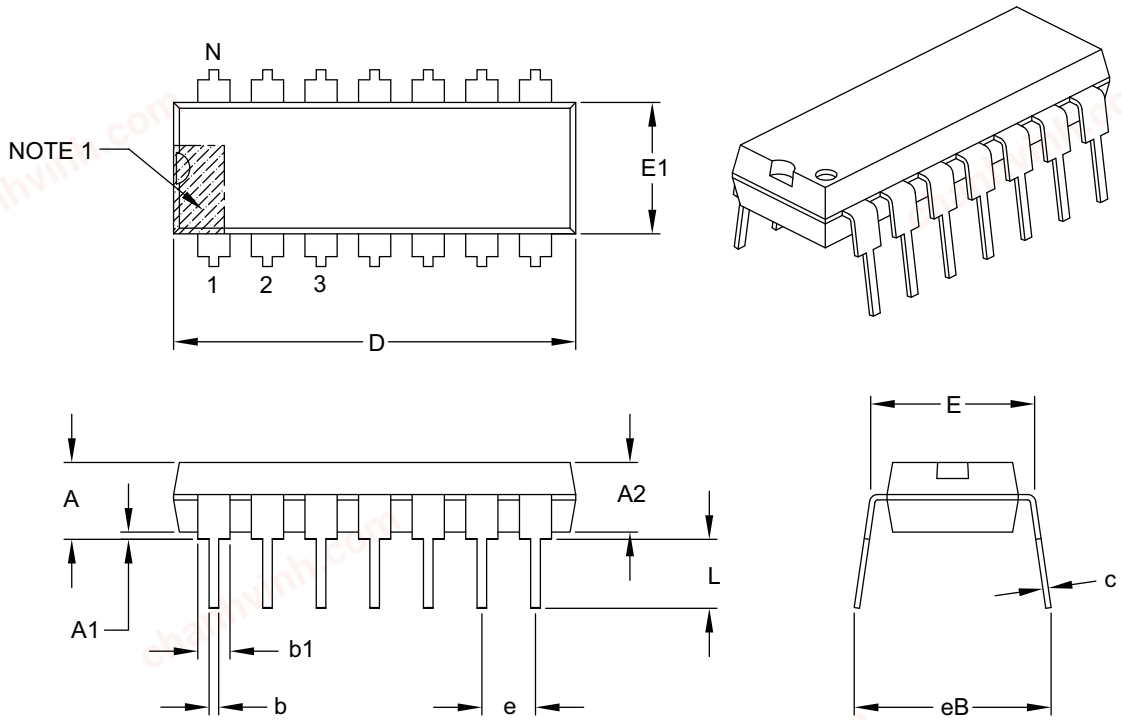

Units		INCHES		
Dimension Limits		MIN	NOM	MAX
Number of Pins	N		14	
Pitch	e		.100 BSC	
Top to Seating Plane	A	–	–	.210
Molded Package Thickness	A2	.115	.130	.195
Base to Seating Plane	A1	.015	–	–
Shoulder to Shoulder Width	E	.290	.310	.325
Molded Package Width	E1	.240	.250	.280
Overall Length	D	.735	.750	.775
Tip to Seating Plane	L	.115	.130	.150
Lead Thickness	c	.008	.010	.015
Upper Lead Width	b1	.045	.060	.070
Lower Lead Width	b	.014	.018	.022
Overall Row Spacing §	eB	–	–	.430

Notes:

1. Pin 1 visual index feature may vary, but must be located with the hatched area.
2. § Significant Characteristic.
3. Dimensions D and E1 do not include mold flash or protrusions. Mold flash or protrusions shall not exceed .010" per side.
4. Dimensioning and tolerancing per ASME Y14.5M.

   BSC: Basic Dimension. Theoretically exact value shown without tolerances.

Microchip Technology Drawing C04-005B

chanhvinh.com

8-Lead Plastic Small Outline (SN) – Narrow, 3.90 mm Body [SOIC]

Note: For the most current package drawings, please see the Microchip Packaging Specification located at http://www.microchip.com/packaging

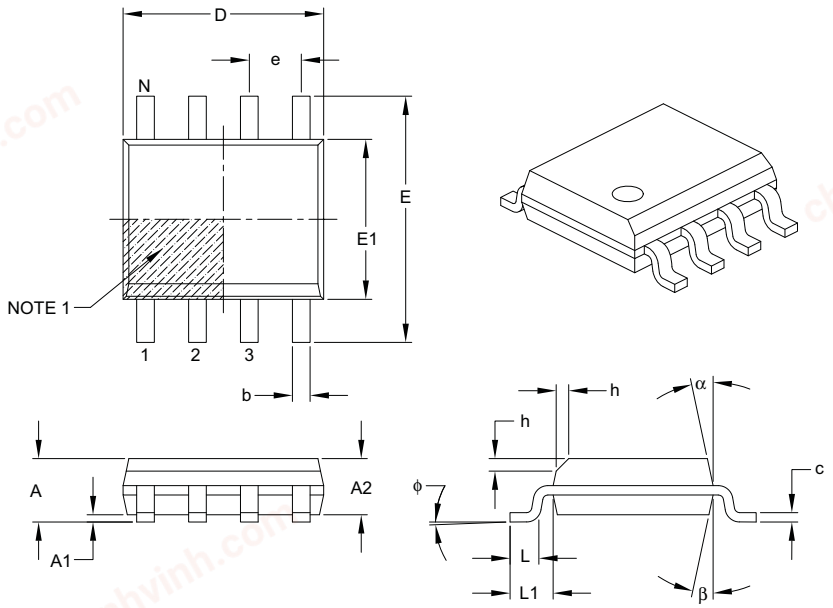

Units		MILLIMETERS		
Dimension Limits		MIN	NOM	MAX
Number of Pins	N		8	
Pitch	e		1.27 BSC	
Overall Height	A	–	–	1.75
Molded Package Thickness	A2	1.25	–	–
Standoff §	A1	0.10	–	0.25
Overall Width	E		6.00 BSC	
Molded Package Width	E1		3.90 BSC	
Overall Length	D		4.90 BSC	
Chamfer (optional)	h	0.25	–	0.50
Foot Length	L	0.40	–	1.27
Footprint	L1		1.04 REF	
Foot Angle	ϕ	0°	–	8°
Lead Thickness	c	0.17	–	0.25
Lead Width	b	0.31	–	0.51
Mold Draft Angle Top	α	5°	–	15°
Mold Draft Angle Bottom	β	5°	–	15°

Notes:

1. Pin 1 visual index feature may vary, but must be located within the hatched area.
2. § Significant Characteristic.
3. Dimensions D and E1 do not include mold flash or protrusions. Mold flash or protrusions shall not exceed 0.15 mm per side.
4. Dimensioning and tolerancing per ASME Y14.5M.

   BSC: Basic Dimension. Theoretically exact value shown without tolerances.

   REF: Reference Dimension, usually without tolerance, for information purposes only.

Microchip Technology Drawing C04-057B

© 2008 Microchip Technology Inc.

chanhvinh.com

8-Lead Plastic Small Outline (SN) – Narrow, 3.90 mm Body [SOIC]

Note: For the most current package drawings, please see the Microchip Packaging Specification located at http://www.microchip.com/packaging

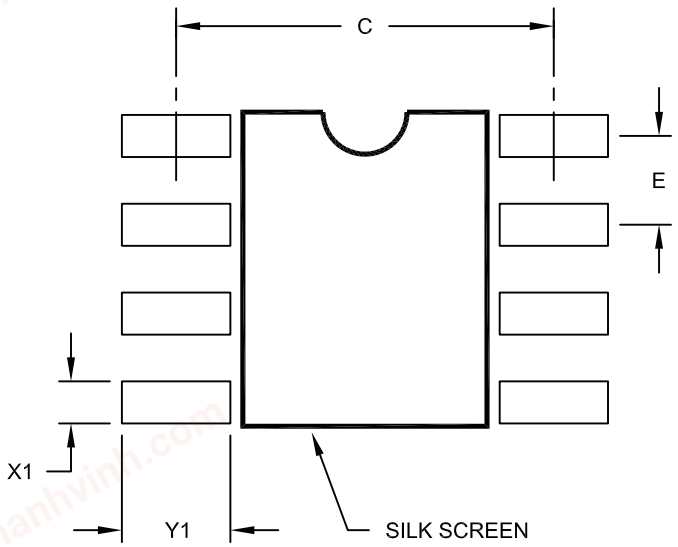

RECOMMENDED LAND PATTERN

Units		MILLIMETERS		
Dimension Limits		MIN	NOM	MAX
Contact Pitch	E		1.27 BSC	
Contact Pad Spacing	C		5.40	
Contact Pad Width (X8)	X1			0.60
Contact Pad Length (X8)	Y1			1.55

Notes:

1. Dimensioning and tolerancing per ASME Y14.5M

BSC: Basic Dimension. Theoretically exact value shown without tolerances.

Microchip Technology Drawing No. C04-2057A

chanhvinh.com

14-Lead Plastic Small Outline (SL) – Narrow, 3.90 mm Body [SOIC]

Note: For the most current package drawings, please see the Microchip Packaging Specification located at http://www.microchip.com/packaging

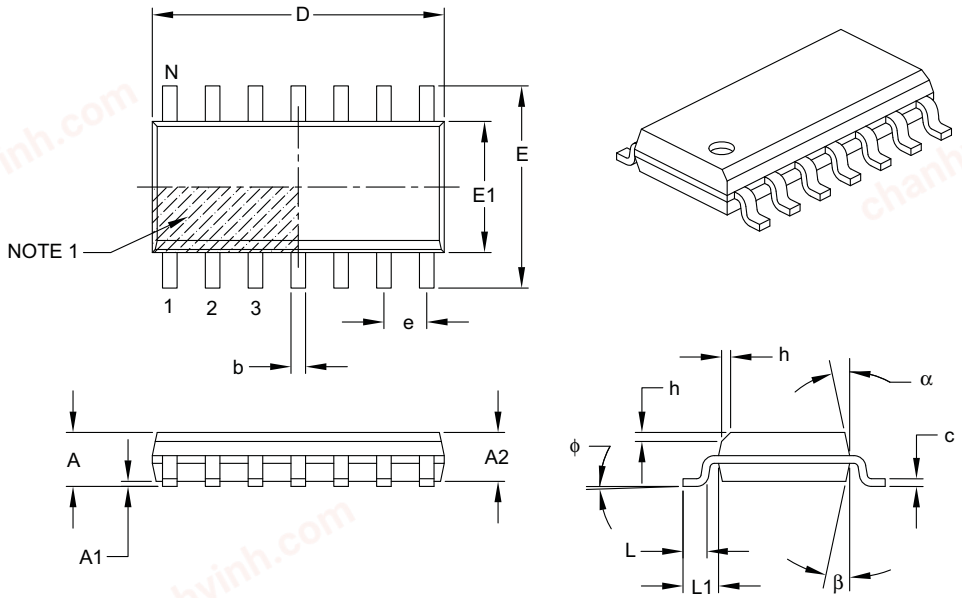

Units		MILLIMETERS		
Dimension Limits		MIN	NOM	MAX
Number of Pins	N		14	
Pitch	e		1.27 BSC	
Overall Height	A	–	–	1.75
Molded Package Thickness	A2	1.25	–	–
Standoff §	A1	0.10	–	0.25
Overall Width	E		6.00 BSC	
Molded Package Width	E1		3.90 BSC	
Overall Length	D		8.65 BSC	
Chamfer (optional)	h	0.25	–	0.50
Foot Length	L	0.40	–	1.27
Footprint	L1		1.04 REF	
Foot Angle	ϕ	0°	–	8°
Lead Thickness	c	0.17	–	0.25
Lead Width	b	0.31	–	0.51
Mold Draft Angle Top	α	5°	–	15°
Mold Draft Angle Bottom	β	5°	–	15°

Notes:

1. Pin 1 visual index feature may vary, but must be located within the hatched area.
2. § Significant Characteristic.
3. Dimensions D and E1 do not include mold flash or protrusions. Mold flash or protrusions shall not exceed 0.15 mm per side.
4. Dimensioning and tolerancing per ASME Y14.5M.

BSC: Basic Dimension. Theoretically exact value shown without tolerances.
REF: Reference Dimension, usually without tolerance, for information purposes only.

Microchip Technology Drawing C04-065B

© 2008 Microchip Technology Inc.

chanhvinh.com

14-Lead Plastic Thin Shrink Small Outline (ST) – 4.4 mm Body [TSSOP]

Note: For the most current package drawings, please see the Microchip Packaging Specification located at http://www.microchip.com/packaging

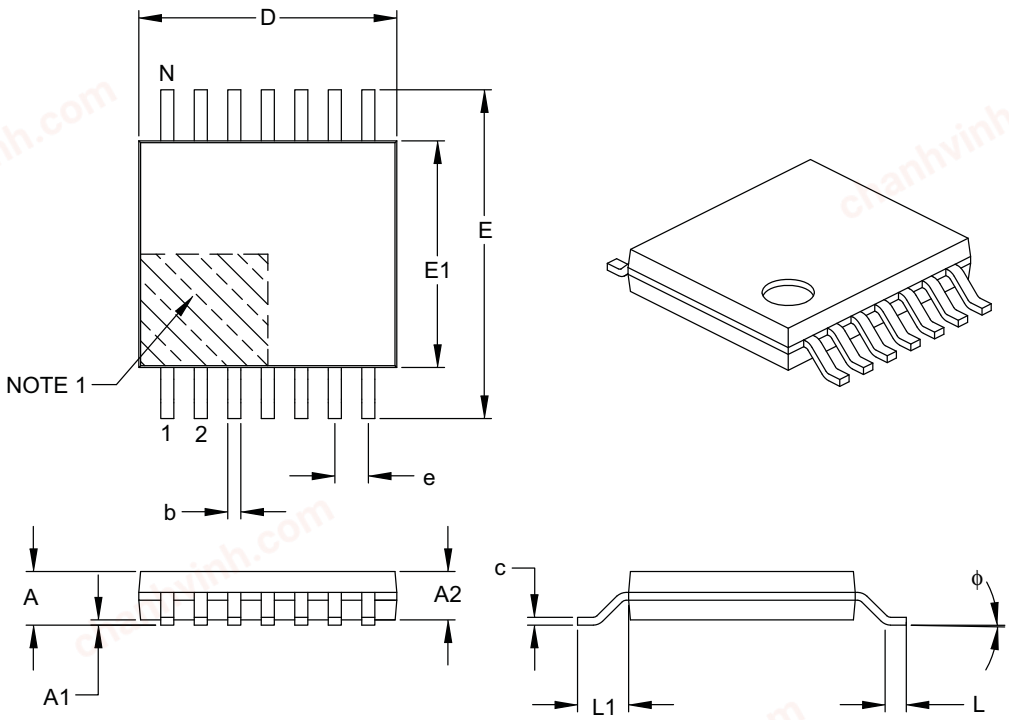

Units		MILLIMETERS		
Dimension Limits		MIN	NOM	MAX
Number of Pins	N		14	
Pitch	e		0.65 BSC	
Overall Height	A	–	–	1.20
Molded Package Thickness	A2	0.80	1.00	1.05
Standoff	A1	0.05	–	0.15
Overall Width	E		6.40 BSC	
Molded Package Width	E1	4.30	4.40	4.50
Molded Package Length	D	4.90	5.00	5.10
Foot Length	L	0.45	0.60	0.75
Footprint	L1		1.00 REF	
Foot Angle	ϕ	0°	–	8°
Lead Thickness	c	0.09	–	0.20
Lead Width	b	0.19	–	0.30

Notes:

1. Pin 1 visual index feature may vary, but must be located within the hatched area.
2. Dimensions D and E1 do not include mold flash or protrusions. Mold flash or protrusions shall not exceed 0.15 mm per side.
3. Dimensioning and tolerancing per ASME Y14.5M.

BSC: Basic Dimension. Theoretically exact value shown without tolerances.
REF: Reference Dimension, usually without tolerance, for information purposes only.

Microchip Technology Drawing C04-087B

© 2008 Microchip Technology Inc.

chanhvinh.com

NOTES:

chanhvinh.com

© 2008 Microchip Technology Inc.

chanhvinh.com

APPENDIX A: REVISION HISTORY

Revision C (February 2008)

The following is the list of modifications:

1. Updated Figure 2-4 and Figure 2-5.
2. Updated trademark and Sales listing pages.
3. Expanded this op amp family:
4. Added the SOT-23-6 package for the MCP6043 op amp with Chip Select.
5. Added Extended Temperature (-40°C to +125°C) parts.
6. Expanded Analog Input Absolute Max Voltage Range (applies retroactively).
7. Expanded operating V_{DD} to a maximum of 6.0V.
8. **Section 1.0 "Electrical Characteristics"** updated.
9. **Section 2.0 "Typical Performance Curves"** updated.
10. **Section 3.0 "Pin Descriptions"** added.
11. **Section 4.0 "Applications Information"**.
12. Added **Section 4.7 "Unused Op Amps"**.
13. Updated input stage explanation.
14. **Section 5.0 "Design Aids"** updated.
15. **Section 6.0 "Packaging Information"**.
16. Added SOT-23-6 package.
17. Corrected package marking information.
18. **Appendix A: "Revision History"** added.

Revision B (June 2002)

The following is the list of modifications.

- Undocumented changes.

Revision A (August 2001)

- Original data sheet release.

chanhvinh.com

NOTES:

chanhvinh.com

© 2008 Microchip Technology Inc.

chanhvinh.com

PRODUCT IDENTIFICATION SYSTEM

To order or obtain information, e.g., on pricing or delivery, refer to the factory or the listed sales office.

PART NO.	X	/XX
Device	Temperature Range	Package

	MCP6041:	Single Op Amp
	MCP6041T	Single Op Amp (Tape and Reel for SOT-23, SOIC, MSOP)
	MCP6042	Dual Op Amp
	MCP6042T	Dual Op Amp (Tape and Reel for SOIC and MSOP)
	MCP6043	Single Op Amp w/ Chip Select
	MCP6043T	Single Op Amp w/ Chip Select (Tape and Reel for SOT-23, SOIC, MSOP)
	MCP6044	Quad Op Amp
	MCP6044T	Quad Op Amp (Tape and Reel for SOIC and TSSOP)
Temperature Range	I =	-40°C to +85°C
	E =	-40°C to +125°C
Package	CH =	Plastic Small Outline Transistor (SOT-23), 6-lead (Tape and Reel - MCP6043 only)
	MS =	Plastic Micro Small Outline (MSOP), 8-lead
	OT =	Plastic Small Outline Transistor (SOT-23), 5-lead (Tape and Reel - MCP6041 only)
	P =	Plastic DIP (300 mil Body), 8-lead, 14-lead
	SL =	Plastic SOIC (150 mil Body), 14-lead
	SN =	Plastic SOIC (150 mil Body), 8-lead
	ST =	Plastic TSSOP (4.4 mm Body), 14-lead

Examples:

a) MCP6041-I/P: Industrial Temp., 8LD PDIP package.

b) MCP6041T-E/OT: Tape and Reel, Extended Temp., 5LD SOT-23 package.

a) MCP6042-I/SN: Industrial Temp., 8LD SOIC package.

b) MCP6042T-E/MS: Tape and Reel, Extended Temp., 5LD SOT-23 package.

a) MCP6043-I/P: Industrial Temp., 8LD PDIP package.

b) MCP6043T-E/CH: Tape and Reel, Extended Temp., 6LD SOT-23 package.

a) MCP6044-I/SL: Industrial Temp., 14LD PDIP package.

b) MCP6044T-E/ST: Tape and Reel, Extended Temp., 14LD TSSOP package.

© 2008 Microchip Technology Inc.

chanhvinh.com

NOTES:

chanhvinh.com

© 2008 Microchip Technology Inc.

chanhvinh.com

Note the following details of the code protection feature on Microchip devices:

- Microchip products meet the specification contained in their particular Microchip Data Sheet.
- Microchip believes that its family of products is one of the most secure families of its kind on the market today, when used in the intended manner and under normal conditions.
- There are dishonest and possibly illegal methods used to breach the code protection feature. All of these methods, to our knowledge, require using the Microchip products in a manner outside the operating specifications contained in Microchip's Data Sheets. Most likely, the person doing so is engaged in theft of intellectual property.
- Microchip is willing to work with the customer who is concerned about the integrity of their code.
- Neither Microchip nor any other semiconductor manufacturer can guarantee the security of their code. Code protection does not mean that we are guaranteeing the product as "unbreakable."

Code protection is constantly evolving. We at Microchip are committed to continuously improving the code protection features of our products. Attempts to break Microchip's code protection feature may be a violation of the Digital Millennium Copyright Act. If such acts allow unauthorized access to your software or other copyrighted work, you may have a right to sue for relief under that Act.

Information contained in this publication regarding device applications and the like is provided only for your convenience and may be superseded by updates. It is your responsibility to ensure that your application meets with your specifications. MICROCHIP MAKES NO REPRESENTATIONS OR WARRANTIES OF ANY KIND WHETHER EXPRESS OR IMPLIED, WRITTEN OR ORAL, STATUTORY OR OTHERWISE, RELATED TO THE INFORMATION, INCLUDING BUT NOT LIMITED TO ITS CONDITION, QUALITY, PERFORMANCE, MERCHANTABILITY OR FITNESS FOR PURPOSE**.** Microchip disclaims all liability arising from this information and its use. Use of Microchip devices in life support and/or safety applications is entirely at the buyer's risk, and the buyer agrees to defend, indemnify and hold harmless Microchip from any and all damages, claims, suits, or expenses resulting from such use. No licenses are conveyed, implicitly or otherwise, under any Microchip intellectual property rights.

Trademarks

The Microchip name and logo, the Microchip logo, Accuron, dsPIC, KEELOQ, KEELOQ logo, MPLAB, PIC, PICmicro, PICSTART, PRO MATE, rfPIC and SmartShunt are registered trademarks of Microchip Technology Incorporated in the U.S.A. and other countries.

FilterLab, Linear Active Thermistor, MXDEV, MXLAB, SEEVAL, SmartSensor and The Embedded Control Solutions Company are registered trademarks of Microchip Technology Incorporated in the U.S.A.

Analog-for-the-Digital Age, Application Maestro, CodeGuard, dsPICDEM, dsPICDEM.net, dsPICworks, dsSPEAK, ECAN, ECONOMONITOR, FanSense, In-Circuit Serial Programming, ICSP, ICEPIC, Mindi, MiWi, MPASM, MPLAB Certified logo, MPLIB, MPLINK, mTouch, PICkit, PICDEM, PICDEM.net, PICtail, PIC^{32} logo, PowerCal, PowerInfo, PowerMate, PowerTool, REAL ICE, rfLAB, Select Mode, Total Endurance, UNI/O, WiperLock and ZENA are trademarks of Microchip Technology Incorporated in the U.S.A. and other countries.

SQTP is a service mark of Microchip Technology Incorporated in the U.S.A.

All other trademarks mentioned herein are property of their respective companies.

© 2008, Microchip Technology Incorporated, Printed in the U.S.A., All Rights Reserved.

Printed on recycled paper.

QUALITY MANAGEMENT SYSTEM
CERTIFIED BY DNV
ISO/TS 16949:2002

Microchip received ISO/TS-16949:2002 certification for its worldwide headquarters, design and wafer fabrication facilities in Chandler and Tempe, Arizona; Gresham, Oregon and design centers in California and India. The Company's quality system processes and procedures are for its PIC® MCUs and dsPIC® DSCs, KEELOQ® code hopping devices, Serial EEPROMs, microperipherals, nonvolatile memory and analog products. In addition, Microchip's quality system for the design and manufacture of development systems is ISO 9001:2000 certified.

chanhvinh.com

WORLDWIDE SALES AND SERVICE

AMERICAS

Corporate Office
2355 West Chandler Blvd.
Chandler, AZ 85224-6199
Tel: 480-792-7200
Fax: 480-792-7277
Technical Support:
http://support.microchip.com
Web Address:
www.microchip.com

Atlanta
Duluth, GA
Tel: 678-957-9614
Fax: 678-957-1455

Boston
Westborough, MA
Tel: 774-760-0087
Fax: 774-760-0088

Chicago
Itasca, IL
Tel: 630-285-0071
Fax: 630-285-0075

Dallas
Addison, TX
Tel: 972-818-7423
Fax: 972-818-2924

Detroit
Farmington Hills, MI
Tel: 248-538-2250
Fax: 248-538-2260

Kokomo
Kokomo, IN
Tel: 765-864-8360
Fax: 765-864-8387

Los Angeles
Mission Viejo, CA
Tel: 949-462-9523
Fax: 949-462-9608

Santa Clara
Santa Clara, CA
Tel: 408-961-6444
Fax: 408-961-6445

Toronto
Mississauga, Ontario,
Canada
Tel: 905-673-0699
Fax: 905-673-6509

ASIA/PACIFIC

Asia Pacific Office
Suites 3707-14, 37th Floor
Tower 6, The Gateway
Harbour City, Kowloon
Hong Kong
Tel: 852-2401-1200
Fax: 852-2401-3431

Australia - Sydney
Tel: 61-2-9868-6733
Fax: 61-2-9868-6755

China - Beijing
Tel: 86-10-8528-2100
Fax: 86-10-8528-2104

China - Chengdu
Tel: 86-28-8665-5511
Fax: 86-28-8665-7889

China - Hong Kong SAR
Tel: 852-2401-1200
Fax: 852-2401-3431

China - Nanjing
Tel: 86-25-8473-2460
Fax: 86-25-8473-2470

China - Qingdao
Tel: 86-532-8502-7355
Fax: 86-532-8502-7205

China - Shanghai
Tel: 86-21-5407-5533
Fax: 86-21-5407-5066

China - Shenyang
Tel: 86-24-2334-2829
Fax: 86-24-2334-2393

China - Shenzhen
Tel: 86-755-8203-2660
Fax: 86-755-8203-1760

China - Wuhan
Tel: 86-27-5980-5300
Fax: 86-27-5980-5118

China - Xiamen
Tel: 86-592-2388138
Fax: 86-592-2388130

China - Xian
Tel: 86-29-8833-7252
Fax: 86-29-8833-7256

China - Zhuhai
Tel: 86-756-3210040
Fax: 86-756-3210049

ASIA/PACIFIC

India - Bangalore
Tel: 91-80-4182-8400
Fax: 91-80-4182-8422

India - New Delhi
Tel: 91-11-4160-8631
Fax: 91-11-4160-8632

India - Pune
Tel: 91-20-2566-1512
Fax: 91-20-2566-1513

Japan - Yokohama
Tel: 81-45-471- 6166
Fax: 81-45-471-6122

Korea - Daegu
Tel: 82-53-744-4301
Fax: 82-53-744-4302

Korea - Seoul
Tel: 82-2-554-7200
Fax: 82-2-558-5932 or
82-2-558-5934

Malaysia - Kuala Lumpur
Tel: 60-3-6201-9857
Fax: 60-3-6201-9859

Malaysia - Penang
Tel: 60-4-227-8870
Fax: 60-4-227-4068

Philippines - Manila
Tel: 63-2-634-9065
Fax: 63-2-634-9069

Singapore
Tel: 65-6334-8870
Fax: 65-6334-8850

Taiwan - Hsin Chu
Tel: 886-3-572-9526
Fax: 886-3-572-6459

Taiwan - Kaohsiung
Tel: 886-7-536-4818
Fax: 886-7-536-4803

Taiwan - Taipei
Tel: 886-2-2500-6610
Fax: 886-2-2508-0102

Thailand - Bangkok
Tel: 66-2-694-1351
Fax: 66-2-694-1350

EUROPE

Austria - Wels
Tel: 43-7242-2244-39
Fax: 43-7242-2244-393

Denmark - Copenhagen
Tel: 45-4450-2828
Fax: 45-4485-2829

France - Paris
Tel: 33-1-69-53-63-20
Fax: 33-1-69-30-90-79

Germany - Munich
Tel: 49-89-627-144-0
Fax: 49-89-627-144-44

Italy - Milan
Tel: 39-0331-742611
Fax: 39-0331-466781

Netherlands - Drunen
Tel: 31-416-690399
Fax: 31-416-690340

Spain - Madrid
Tel: 34-91-708-08-90
Fax: 34-91-708-08-91

UK - Wokingham
Tel: 44-118-921-5869
Fax: 44-118-921-5820

01/02/08

© 2008 Microchip Technology Inc.