chanhvinh.com

MCP16251/2

Low Quiescent Current, PFM/PWM Synchronous Boost Regulator with True Output Disconnect or Input/Output Bypass Option

Features

- Up to 96% Typical Efficiency
- 650 mA Typical Peak Input Current Limit:
  - I_{OUT} > 100 mA @ 3.3V V_{OUT}, 1.2V V_{IN}
  - I_{OUT} > 250 mA @ 3.3V V_{OUT}, 2.4V V_{IN}
  - I_{OUT} > 225 mA @ 5.0V V_{OUT}, 3.3V V_{IN}
- Low Device Quiescent Current:
  - Output Quiescent Current: < 4 µA typical, device is not switching (V_{OUT} > V_{IN}, excluding feedback divider current)
  - Input Sleep Current: 1 µA
  - No Load Input Current: 14 µA typical
- Shutdown Current: 0.6 µA typical
- Low Start-Up Voltage: 0.82V, 1 mA load
- Low Operating Input Voltage: down to 0.35V
- Adjustable Output Voltage Range: 1.8V to 5.5V
- Maximum Input Voltage ≤ V_{OUT} < 5.5V
- Automatic PFM/PWM Operation:
  - PWM Operation: 500 kHz
  - PFM Output Ripple: 150 mV typical
- Feedback Voltage: 1.23V
- Internal Synchronous Rectifier
- Internal Compensation
- Inrush Current Limiting and Internal Soft Start (1.5 ms typical)
- Selectable, Logic Controlled, Shutdown States:
  - True Load Disconnect Option (MCP16251)
  - Input-to-Output Bypass Option (MCP16252)
- Anti-Ringing Control
- Overtemperature Protection
- Available Packages:
  - SOT-23, 6-Lead
  - TDFN, 2 x 3 x 0.8 mm, 8-Lead

Package Types

MCP16251/2
6-Lead SOT-23

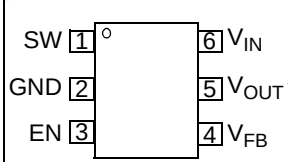

MCP16251/2
2x3x0.8 TDFN*

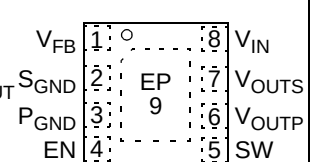

* Includes Exposed Thermal Pad (EP); see Table 3-1.

Applications

- One, Two and Three-Cell Alkaline and NiMH/NiCd Portable Products
- Solar Cell Applications
- Personal Care and Medical Products
- Bias for Status LEDs
- Smartphones, MP3 Players, Digital Cameras
- Remote Controllers, Portable Instruments
- Wireless Sensors
- Bluetooth Headsets
- +3.3V to +5.0V Distributed Power Supply

General Description

The MCP16251/2 is a compact, high-efficiency, fixed frequency, synchronous step-up DC-DC converter. This family of devices provides an easy-to-use power supply solution for applications powered by either one-cell, two-cell or three-cell alkaline, NiCd, NiMH, one-cell Li-Ion or Li-Polymer batteries.

Low-voltage technology allows the regulator to start-up without high inrush current or output voltage overshoot from a low-voltage input. High efficiency is accomplished by integrating the low-resistance N-Channel boost switch and synchronous P-Channel switch. All compensation and protection circuitry are integrated to minimize external components. MCP16251/2 operates and consumes less than 14 µA from battery after start-up, while operating at no load (V_{OUT} = 3.3V, V_{IN} = 1.5V). The devices provide a true disconnect from input to output (MCP16251) or an input-to-output bypass (MCP16252), while in shutdown (EN = GND). Both shutdown options consume less than 0.6 µA from battery.

Output voltage is set by a small external resistor divider. Two package options, SOT-23, 6-lead and TDFN, 2 x 3 x 0.8 mm, 8-lead are available.

© 2013 - 2016 Microchip Technology Inc.

chanhvinh.com

Typical Application

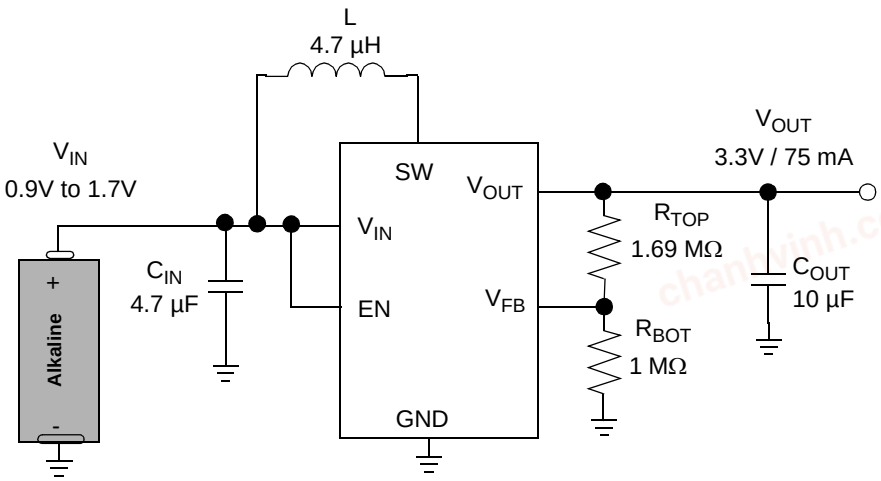

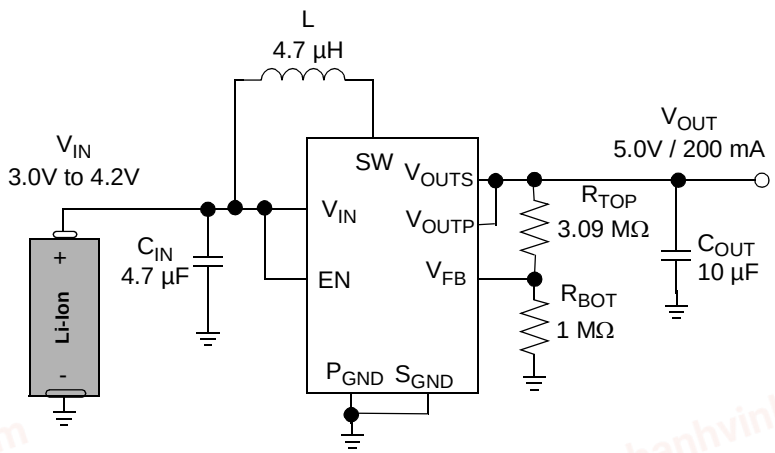

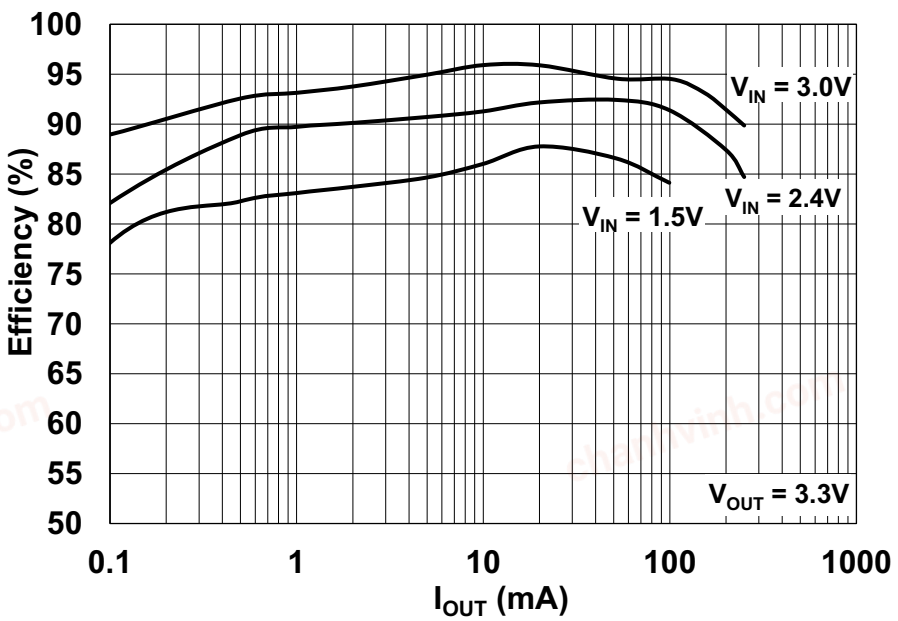

© 2013 - 2016 Microchip Technology Inc.

chanhvinh.com

1.0 ELECTRICAL CHARACTERISTICS

Absolute Maximum Ratings †

EN, V_{FB}, V_{IN}, V_{SW}, V_{OUT} - GND ..... +6.5V
EN, V_{FB} ..... < maximum V_{OUT} or V_{IN} > (GND - 0.3V)
Output Short-Circuit Current ..... Continuous
Output Current Bypass Mode..... 400 mA
Power Dissipation ..... Internally Limited
Storage Temperature ..... -65°C to +150°C
Ambient Temp. with Power Applied..... -40°C to +85°C
Operating Junction Temperature..... -40°C to +125°C
ESD Protection On All Pins:
HBM ..... 4 kV
MM 400V

† Notice: Stresses above those listed under "Maximum Ratings" may cause permanent damage to the device. This is a stress rating only and functional operation of the device at those or any other conditions above those indicated in the operational sections of this specification is not intended. Exposure to maximum rating conditions for extended periods may affect device reliability.

DC CHARACTERISTICS

Electrical Characteristics: Unless otherwise indicated, V_{IN} = 1.5V, C_{OUT} = C_{IN} = 10 µF, L = 4.7 µH, V_{OUT} = 3.3V, I_{OUT} = 0 mA, T_A = +25°C. **Boldface** specifications apply over the T_A range of -40°C to +85°C.

Parameters	Sym.	Min.	Typ.	Max.	Units	Conditions
Input Characteristics						
Minimum Start-Up Voltage	V_{IN}	—	0.82	—	V	**Note 1**
Minimum Input Voltage After Start-Up	V_{IN}	—	0.35	—	V	**Note 1**
Output Voltage Adjust Range	V_{OUT}	**1.8**	—	**5.5**	V	$V_{OUT} \geq V_{IN}$ **Note 2**
Maximum Output Current	I_{OUT}	**100**	150	—	mA	1.2V V_{IN}, 2.0V V_{OUT}
			125	—		1.5V V_{IN}, 3.3V V_{OUT}
			225	—		3.3V V_{IN}, 5.0V V_{OUT}
Feedback Voltage	V_{FB}	**1.1931**	**1.23**	**1.2669**	V	
Feedback Input Bias Current	I_{VFB}	—	10	—	nA	
V_{OUT} Quiescent Current	I_{QOUT}	—	4.0	8	µA	I_{OUT} = 0 mA, device is not switching, EN = V_{IN} = 4.0V, V_{OUT} = 5.0V, does not include feedback divider current **(Note 3)**
V_{IN} Sleep Current	I_{QIN}	—	1.0	2.3	µA	I_{OUT} = 0 mA, EN = V_{IN} **(Note 3)**, **(Note 5)**
No Load Input Current	I_{IN0}	—	14	25	µA	I_{OUT} = 0 mA, device is switching
Quiescent Current – Shutdown	$I_{Q\overline{SHDN}}$	—	0.6	—	µA	V_{OUT} = EN = GND; includes N-Channel and P-Channel Switch Leakage

Note 1: 3.3 kΩ resistive load, 3.3V_{OUT} (1 mA).
2: For V_{IN} > V_{OUT}, V_{OUT} will not remain in regulation.
3: I_{QOUT} is measured at V_{OUT}, V_{OUT} is supplied externally for V_{OUT} > V_{IN} (device is not switching), I_{QIN} is measured at V_{IN} pin during Sleep period, no load.
4: 220Ω resistive load, 3.3V_{OUT} (15 mA).
5: Determined by characterization, not production tested.

© 2013 - 2016 Microchip Technology Inc.

chanhvinh.com

DC CHARACTERISTICS (CONTINUED)

Electrical Characteristics: Unless otherwise indicated, V_{IN} = 1.5V, C_{OUT} = C_{IN} = 10 µF, L = 4.7 µH, V_{OUT} = 3.3V, I_{OUT} = 0 mA, T_A = +25°C. **Boldface** specifications apply over the T_A range of -40°C to +85°C.

Parameters	Sym.	Min.	Typ.	Max.	Units	Conditions
NMOS Switch Leakage	I_{NLK}	—	0.15	—	µA	V_{IN} = V_{SW} = 5V V_{OUT} = 5.5V V_{EN} = V_{FB} = GND
PMOS Switch Leakage	I_{PLK}	—	0.15	—	µA	V_{IN} = V_{SW} = GND V_{OUT} = 5.5V
NMOS Switch ON Resistance	$R_{DS(ON)N}$	—	0.45	—	Ω	V_{IN} = 3.3V I_{SW} = 100 mA
PMOS Switch ON Resistance	$R_{DS(ON)P}$	—	0.9	—	Ω	V_{IN} = 3.3V I_{SW} = 100 mA
NMOS Peak Switch Current Limit	$I_{N(MAX)}$	—	650	—	mA	**Note 5**
V_{OUT} Accuracy	V_{OUT}%	**-3**	—	**+3**	%	Includes Line and Load Regulation; V_{IN} = 1.5V
Line Regulation	$\lvert(\Delta V_{OUT}/V_{OUT})/\Delta V_{IN}\rvert$	-0.4	0.3	0.4	%/V	V_{IN} = 1.5V to 2.8V I_{OUT} = 50 mA
Load Regulation	$\lvert\Delta V_{OUT}/V_{OUT}\rvert$	-1.5	0.1	1.5	%	I_{OUT} = 25 mA to 100 mA V_{IN} = 1.5V
Maximum Duty Cycle	DC_{MAX}	87	89	91	%	**Note 5**
Switching Frequency	f_{SW}	**425**	**500**	**575**	kHz	
EN Input Logic High	V_{IH}	**70**	—	—	% of V_{IN}	I_{OUT} = 1 mA
EN Input Logic Low	V_{IL}	—	—	**20**	% of V_{IN}	I_{OUT} = 1 mA
EN Input Leakage Current	I_{ENLK}	—	5.0	—	nA	V_{EN} = 5V
Soft Start Time	t_{SS}	—	—	1.5	ms	EN Low to High 90% of V_{OUT} **(Note 4)**, **(Note 5)**
Thermal Shutdown Die Temperature	T_{SD}	—	160	—	°C	I_{OUT} = 20 mA V_{IN} > 1.4V
Die Temperature Hysteresis	T_{SDHYS}	—	20	—	°C	

Note 1: 3.3 kΩ resistive load, 3.3V_{OUT} (1 mA).

2: For V_{IN} > V_{OUT}, V_{OUT} will not remain in regulation.

3: I_{QOUT} is measured at V_{OUT}, V_{OUT} is supplied externally for V_{OUT} > V_{IN} (device is not switching), I_{QIN} is measured at V_{IN} pin during Sleep period, no load.

4: 220Ω resistive load, 3.3V_{OUT} (15 mA).

5: Determined by characterization, not production tested.

TEMPERATURE SPECIFICATIONS

Electrical Characteristics: Unless otherwise indicated, V_{IN} = 1.5V, C_{OUT} = C_{IN} = 10 µF, L = 4.7 µH, V_{OUT} = 3.3V, I_{OUT} = 0 mA.

Parameters	Sym.	Min.	Typ.	Max.	Units	Conditions
Temperature Ranges						
Operating Temperature Range	T_J	-40	—	+85	°C	Steady State
Storage Temperature Range	T_A	-65	—	+150	°C	
Maximum Junction Temperature	T_J	—	—	+150	°C	Transient
Package Thermal Resistances						
Thermal Resistance, SOT-23, 6-LD	θ_{JA}	—	190.5	—	°C/W	EIA/JESD51-3 Standard
Thermal Resistance, TDFN, 2x3x0.8m, 8-LD	θ_{JA}	—	52.5	—	°C/W	

© 2013 - 2016 Microchip Technology Inc.

chanhvinh.com

2.0 TYPICAL PERFORMANCE CURVES

Note: The graphs and tables provided following this note are a statistical summary based on a limited number of samples and are provided for informational purposes only. The performance characteristics listed herein are not tested or guaranteed. In some graphs or tables, the data presented may be outside the specified operating range (e.g., outside specified power supply range) and therefore outside the warranted range.

Note: Unless otherwise indicated, V_{IN} = EN = 1.5V, C_{OUT} = C_{IN} = 10 µF, L = 4.7 µH, V_{OUT} = 3.3V, I_{LOAD} = 0 mA, T_A = +25°C, SOT-23 package.

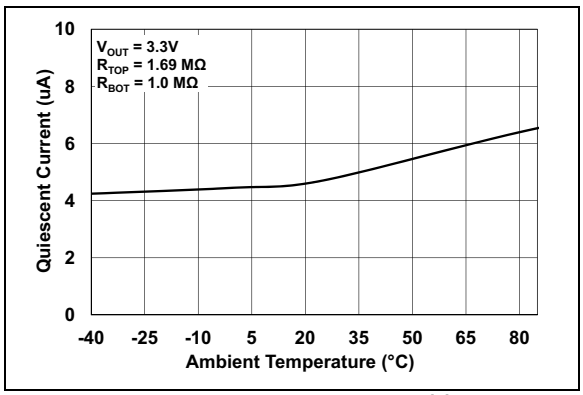

FIGURE 2-1: *V_{OUT} I_Q vs. Ambient Temperature.*

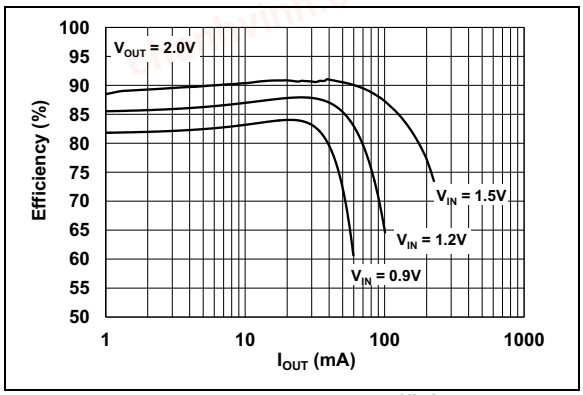

FIGURE 2-4: *2.0V V_{OUT} Efficiency vs. I_{OUT}.*

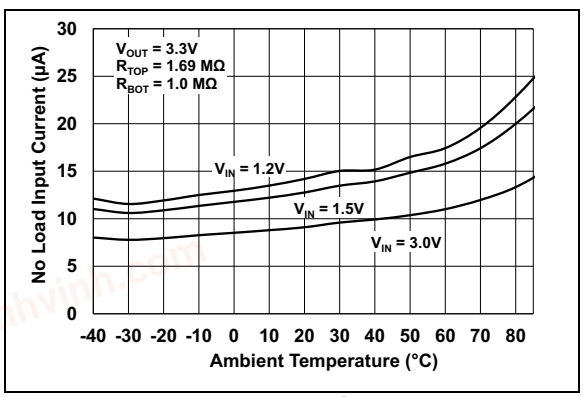

FIGURE 2-2: *No Load Input Current vs. Temperature.*

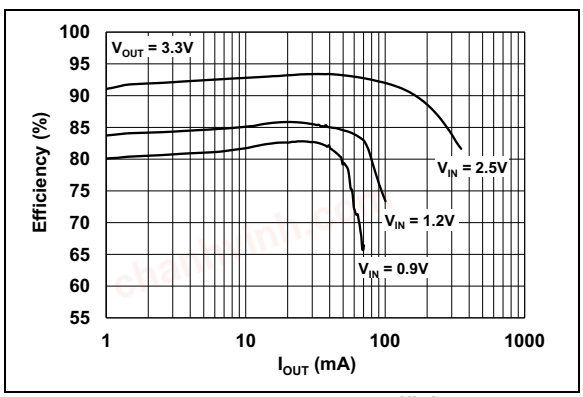

FIGURE 2-5: *3.3V V_{OUT} Efficiency vs. I_{OUT}.*

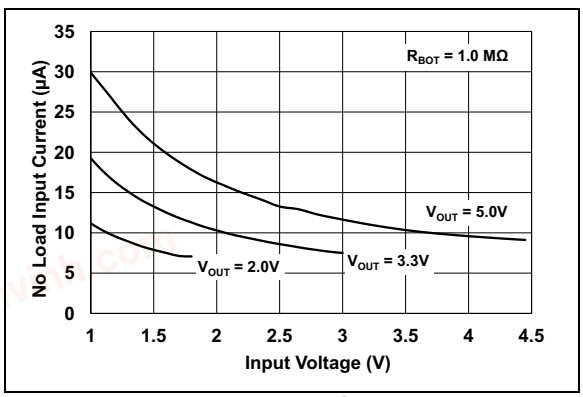

FIGURE 2-3: *No Load Input Current vs. V_{IN}, after Start-Up.*

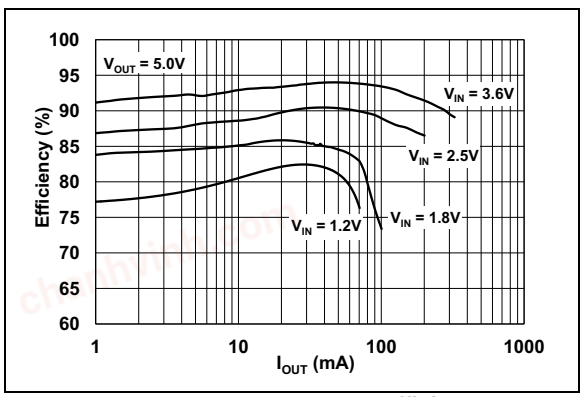

FIGURE 2-6: *5.0V V_{OUT} Efficiency vs. I_{OUT}.*

© 2013 - 2016 Microchip Technology Inc.

chanhvinh.com

Note: Unless otherwise indicated, V_{IN} = EN = 1.5V, C_{OUT} = C_{IN} = 10 µF, L = 4.7 µH, V_{OUT} = 3.3V, I_{LOAD} = 0 mA, T_A = +25°C, SOT-23 package.

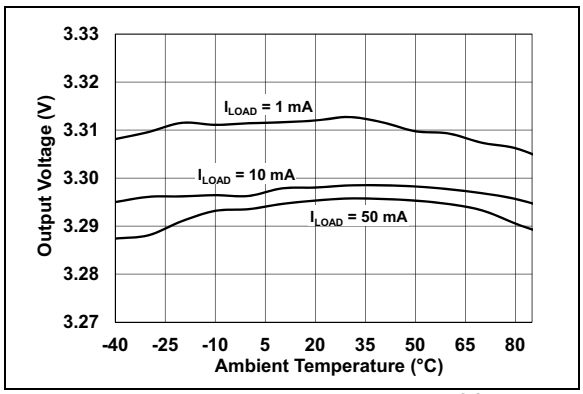

FIGURE 2-7: *3.3V V_{OUT} vs. Ambient Temperature.*

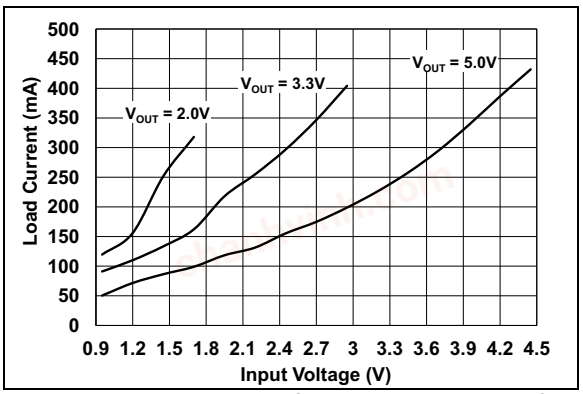

FIGURE 2-10: *Maximum I_{OUT} vs. V_{IN}, after Start-up, V_{OUT} Maximum 5% below Regulation Point.*

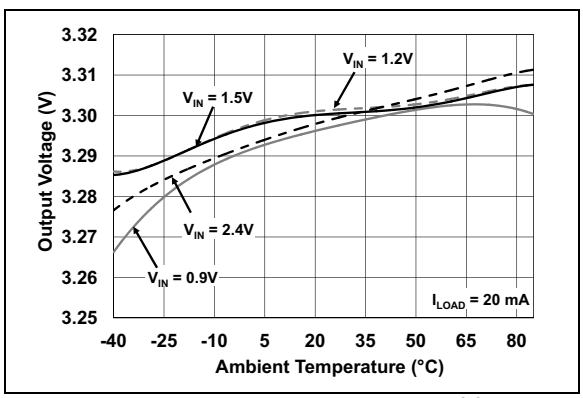

FIGURE 2-8: *3.3V V_{OUT} vs. Ambient Temperature.*

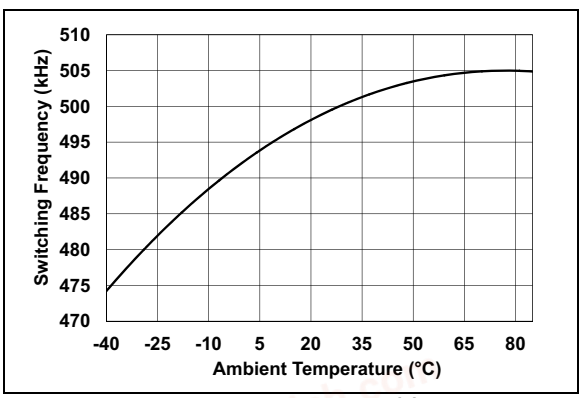

FIGURE 2-11: *F_{OSC} vs. Ambient Temperature.*

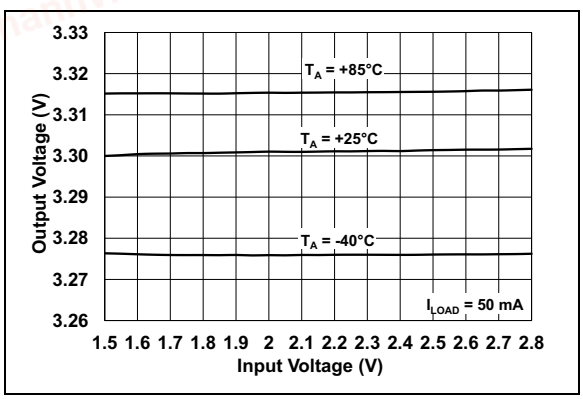

FIGURE 2-9: *3.3V V_{OUT} vs. V_{IN}.*

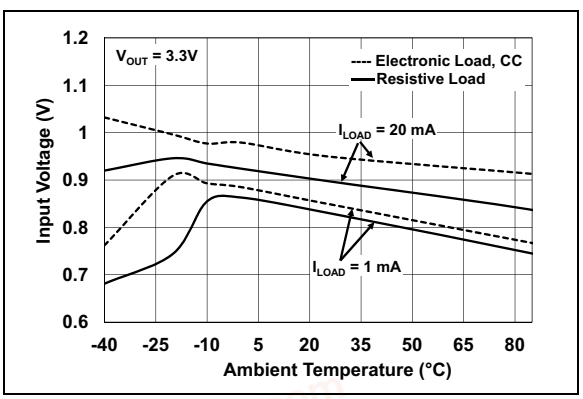

FIGURE 2-12: *V_{IN} Start-Up vs. Temperature into Resistive Load and Constant Current.*

© 2013 - 2016 Microchip Technology Inc.

chanhvinh.com

Note: Unless otherwise indicated, V_{IN} = EN = 1.5V, C_{OUT} = C_{IN} = 10 µF, L = 4.7 µH, V_{OUT} = 3.3V, I_{LOAD} = 0 mA, T_A = +25°C, SOT-23 package.

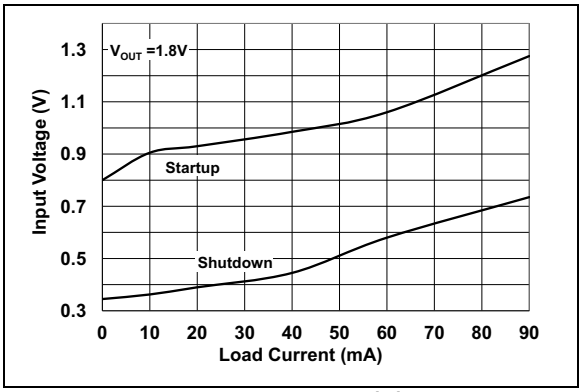

FIGURE 2-13: *1.8V_{OUT} Minimum Start-Up and Shutdown V_{IN} into Resistive Load vs. I_{OUT}.*

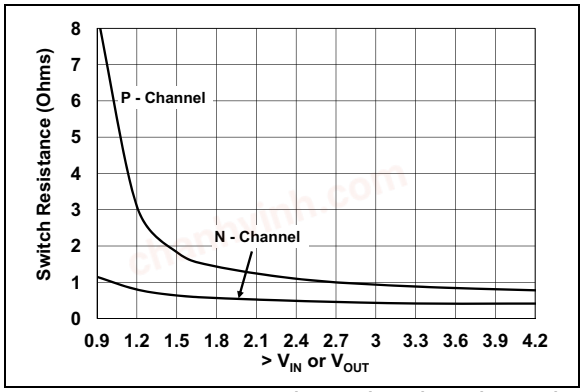

FIGURE 2-16: *N-Channel and P-Channel R_{DSON} vs. the Maximum V_{IN} or V_{OUT}.*

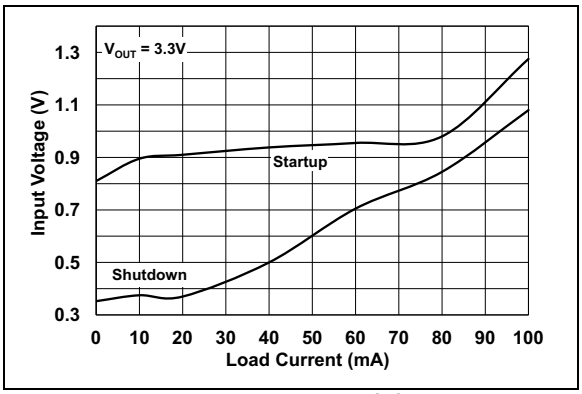

FIGURE 2-14: *3.3V_{OUT} Minimum Start-Up and Shutdown V_{IN} into Resistive Load vs. I_{OUT}.*

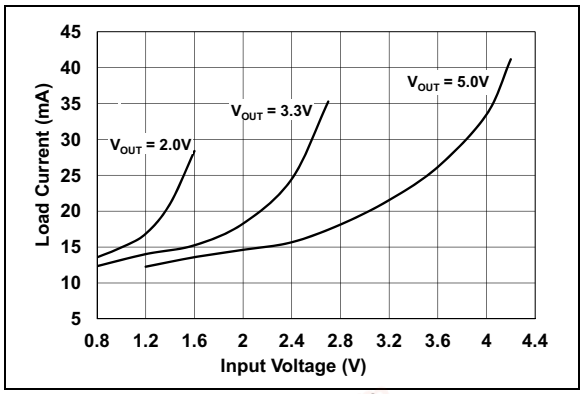

FIGURE 2-17: *Average of PFM-to-PWM Threshold Current vs. V_{IN}.*

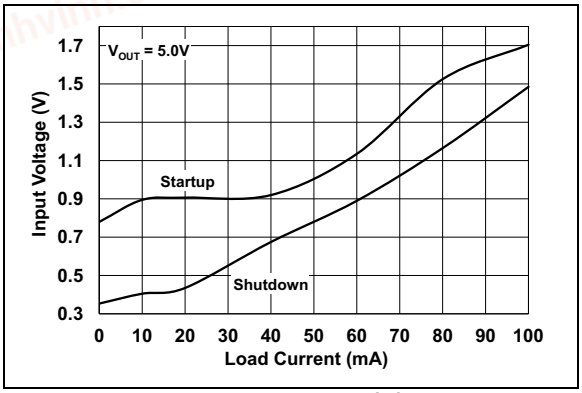

FIGURE 2-15: *5.0V_{OUT} Minimum Start-Up and Shutdown V_{IN} into Resistive Load vs. I_{OUT}.*

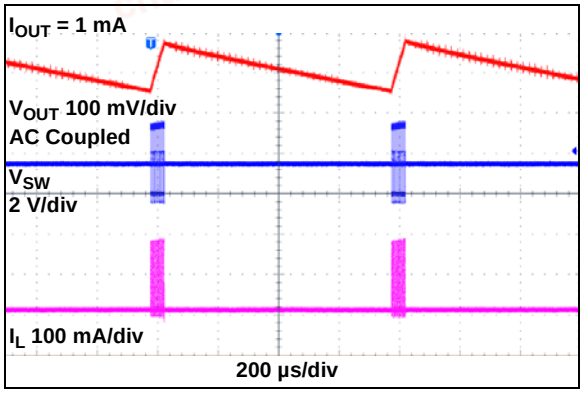

FIGURE 2-18: *MCP16251 3.3V V_{OUT} PFM Mode Waveforms.*

chanhvinh.com

Note: Unless otherwise indicated, V_{IN} = EN = 1.5V, C_{OUT} = C_{IN} = 10 µF, L = 4.7 µH, V_{OUT} = 3.3V, I_{LOAD} = 0 mA, T_A = +25°C, SOT-23 package.

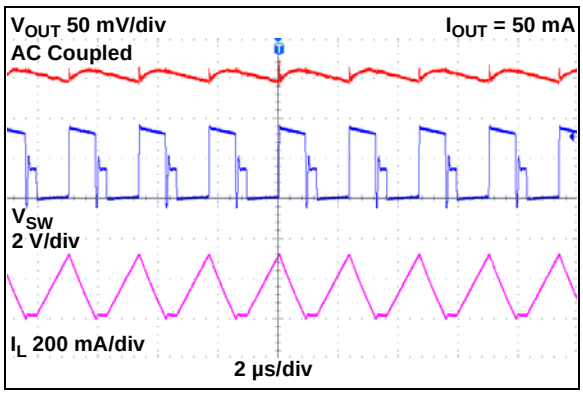

FIGURE 2-19: *MCP16251 3.3V V_{OUT} PWM Mode Waveforms.*

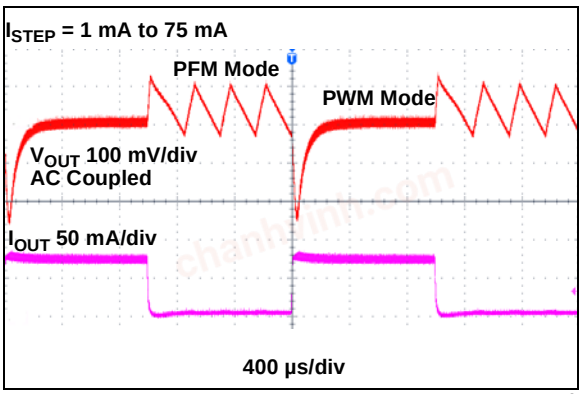

FIGURE 2-22: *MCP16251 3.3V V_{OUT} Load Transient Waveforms.*

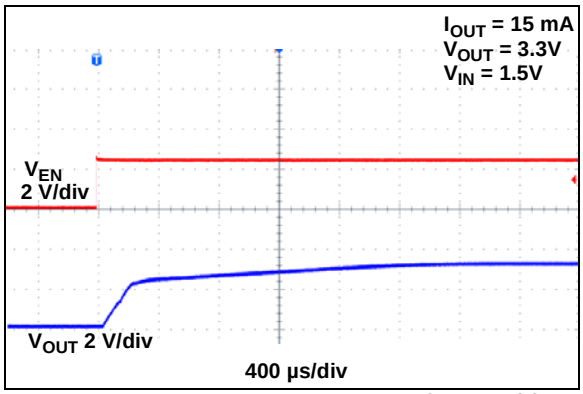

FIGURE 2-20: *3.3V Start-up after Enable.*

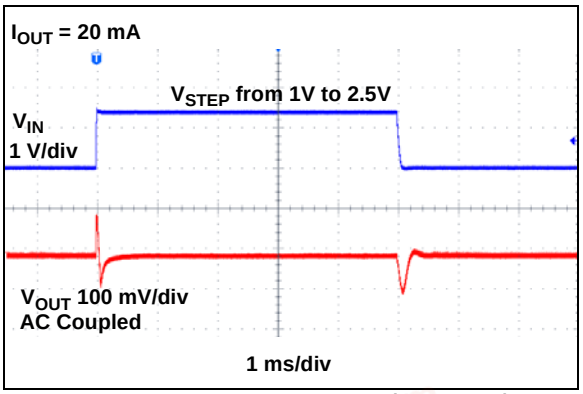

FIGURE 2-23: *3.3V V_{OUT} Line Transient Waveforms.*

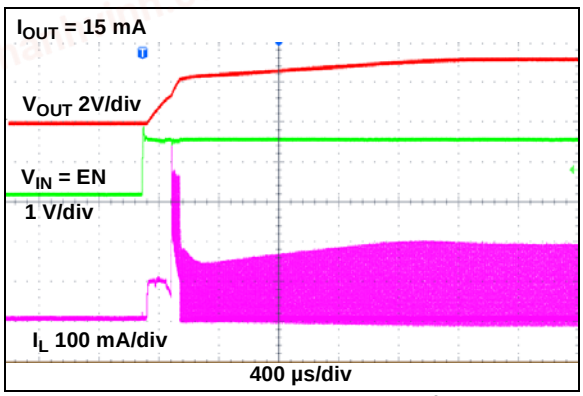

FIGURE 2-21: *3.3V Start-Up when V_{IN} = V_{ENABLE}.*

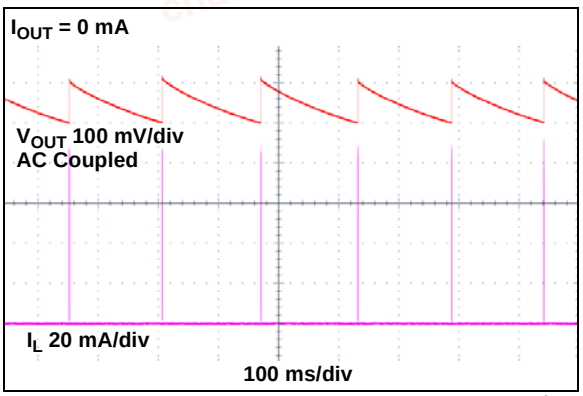

FIGURE 2-24: *MCP16251 3.3V No Load V_{OUT} PFM Mode Output Ripple.*

© 2013 - 2016 Microchip Technology Inc.

chanhvinh.com

3.0 PIN DESCRIPTIONS

The descriptions of the pins are listed in Table 3-1.

TABLE 3-1: PIN FUNCTION TABLE

MCP16251/2 SOT-23	MCP16251/2 TDFN 2x3x0.8	Symbol	Description
4	1	V_{FB}	Feedback Voltage Pin
—	2	S_{GND}	Signal Ground Pin
—	3	P_{GND}	Power Ground Pin
3	4	EN	Enable Control Input Pin
1	5	SW	Switch Node, Boost Inductor Input Pin
—	6	V_{OUTP}	Output Voltage Power Pin
—	7	V_{OUTS}	Output Voltage Sense Pin
6	8	V_{IN}	Input Voltage Pin
—	9	EP	Exposed Thermal Pad (EP); must be connected to S_{GND} and P_{GND}.
2	—	GND	Ground Pin
5	—	V_{OUT}	Output Voltage Pin

3.1 Feedback Voltage Pin (V_{FB})

The V_{FB} pin is used to provide output voltage regulation by using a resistor divider. Feedback voltage will typically be 1.23V, with the output voltage in regulation.

3.2 Signal Ground Pin (S_{GND})

The signal ground pin is used as a return for the integrated V_{REF} and error amplifier. In the 2x3x0.8 TDFN package, the S_{GND} and power ground (P_{GND}) pins are connected externally.

3.3 Power Ground Pin (P_{GND})

The power ground pin is used as a return for the high-current N-Channel switch. In the 2x3x0.8 TDFN package, the P_{GND} and signal ground (S_{GND}) pins are connected externally.

3.4 Enable Pin (EN)

The EN pin is a logic-level input used to enable or disable device switching and lower quiescent current while disabled. A logic high (>70% of V_{IN}) will enable the regulator output. A logic low (<20% of V_{IN}) will ensure that the regulator is disabled.

3.5 Switch Node Pin (SW)

Connect the inductor from the input voltage to the SW pin. The SW pin carries inductor current and can be as high as 650 mA typical peak. The integrated N-Channel switch drain and integrated P-Channel switch source are internally connected at the SW node.

3.6 Output Voltage Power Pin (V_{OUTP})

The output voltage power pin connects the output voltage to the switch node. High current flows through the integrated P-Channel and out of this pin to the output capacitor and output. In the 2x3x0.8 TDFN package, V_{OUTS} and V_{OUTP} are connected externally.

3.7 Output Voltage Sense Pin (V_{OUTS})

The output voltage sense pin connects the regulated output voltage to the internal bias circuits. In the 2x3x0.8 TDFN package, V_{OUTS} and V_{OUTP} are connected externally.

3.8 Power Supply Input Voltage Pin (V_{IN})

Connect the input voltage source to V_{IN}. The input source should be decoupled to GND with a 4.7 µF minimum capacitor.

3.9 Exposed Thermal Pad (EP)

There is no internal electrical connection between the Exposed Thermal Pad (EP) and the P_{GND} and S_{GND} pins. They must be connected to the same potential on the Printed Circuit Board (PCB).

3.10 Ground Pin (GND)

The ground or return pin is used for circuit ground connection. Length of trace from input cap return, output cap return and GND pin should be made as short as possible to minimize noise on the GND pin. In the SOT23-6 package, a single ground pin is used.

3.11 Output Voltage Pin (V_{OUT})

The output voltage pin connects the integrated P-Channel MOSFET to the output capacitor. The feedback voltage divider is also connected to the V_{OUT} pin for voltage regulation.

© 2013 - 2016 Microchip Technology Inc.

chanhvinh.com

4.0 DETAILED DESCRIPTION

4.1 Device Overview

The MCP16251/2 family of devices is capable of low start-up voltage and delivers high efficiency over a wide load range for single-cell, two-cell, three-cell alkaline, NiMH, NiCd and single-cell Li-Ion battery inputs. A high level of integration lowers total system cost, eases implementation and reduces board area. The devices feature low quiescent current, low start-up voltage, adjustable output voltage, PWM/PFM mode operation, integrated synchronous switch, internal compensation, low noise anti-ring control, inrush current limit and soft start. There are two options for the MCP16251/2 family: True Output Disconnect and Input-to-Output Bypass (see Table 4-1).

4.1.1 PFM/PWM OPERATION

The MCP16251/2 devices use an automatic switchover from PWM to PFM mode for light load conditions, to maximize efficiency over a wide range of output current. During PFM mode, a controlled peak current is used to pump the output up to the threshold limit. While operating in PFM or PWM mode, the P-Channel switch is used as a synchronous rectifier, turning off when the inductor current reaches 0 mA to maximize efficiency. In PFM mode, a comparator is used to terminate switching when the output voltage reaches the upper threshold limit. Once switching has terminated, the output voltage will decay or coast down. During this period, which is called Sleep period, 1 µA is typically consumed from the input source, which keeps power efficiency high at light load. PWM/PFM mode has higher output ripple voltage than PWM mode, and variable frequency. The PFM mode frequency is a function of input voltage, output voltage and load. While in PFM mode, the boost converter periodically pumps the output with a fixed switching frequency of 500 kHz. Figure 2-17 represents the load current versus input voltage for the PFM-to-PWM threshold.

4.1.2 TRUE OUTPUT DISCONNECT OPTION

The MCP16251 device incorporates a true output disconnect feature. With the EN pin pulled low, the output of the MCP16251 is isolated or disconnected from the input by turning off the integrated P-Channel switch and removing the switch bulk diode connection. This removes the DC path typical in boost converters, which allows the output to be disconnected from the input. During this mode, less than 0.6 µA of current is consumed from the input (battery). True output disconnect does not discharge the output; the output voltage is held up by the external C_{OUT} capacitance.

4.1.3 INPUT BYPASS OPTION

The MCP16252 device incorporates the input-to-output bypass shutdown option. With the EN input pulled low, the output is connected to the input using the internal P-Channel MOSFET. In this mode, the current draw from the input (battery) is less than 0.6 µA with no load. The Input Bypass mode is used when the input voltage range is high enough for the load to operate in Standby or Low I_Q mode. When a higher regulated output voltage is necessary to operate the application, the EN input is pulled high, enabling the boost converter.

In this mode, the current through the P-Channel MOSFET must not be higher than 400 mA.

TABLE 4-1: PART NUMBER SELECTION

Part Number	True Output Disconnect	Input-to-Output Bypass
MCP16251	✓	—
MCP16252	—	✓

© 2013 - 2016 Microchip Technology Inc.

chanhvinh.com

4.2 Functional Description

The MCP16251/2 is a compact, high-efficiency, fixed frequency, step-up DC-DC converter that provides an easy-to-use power supply solution for applications powered by either one-cell, two-cell, or three-cell alkaline, NiCd, or NiMH, or one-cell Li-Ion or Li-Polymer batteries.

Figure 4-1 represents the functional block diagram of the MCP16251/2.

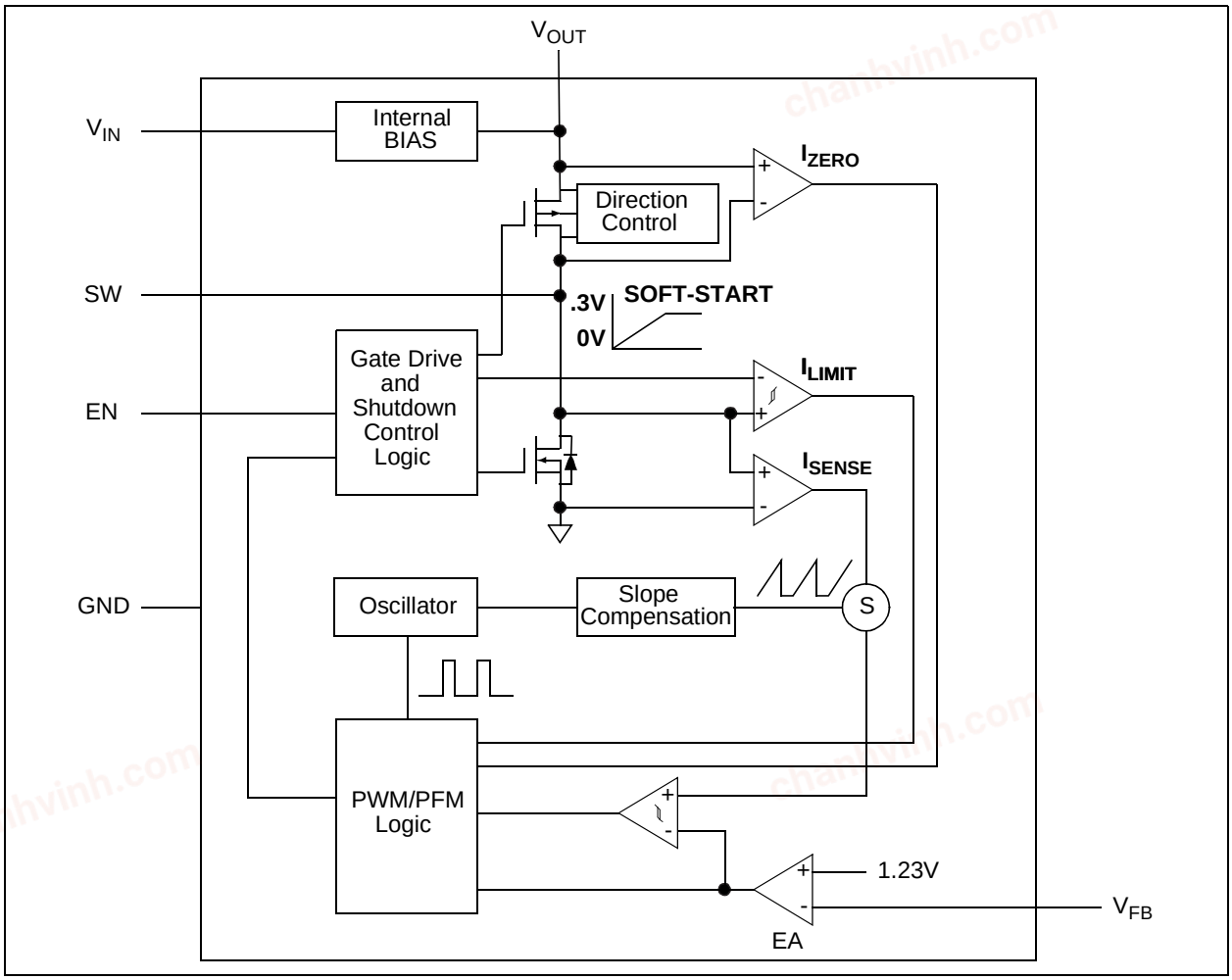

FIGURE 4-1: *MCP16251/2 Block Diagram.*

chanhvinh.com

4.2.1 LOW-VOLTAGE START-UP

The MCP16251/2 is capable of starting from a low input voltage. Start-up voltage is typically 0.82V for a 3.3V output and 1 mA resistive load.

When enabled, the internal start-up logic turns the rectifying P-Channel switch on until the output capacitor is charged to a value close to the input voltage. The rectifying switch is current limited during this time. After charging the output capacitor to the input voltage, the device starts switching. If the output voltage is below 60-70% of the desired V_{OUT}, the device runs in open-loop with a fixed duty cycle of 70-75% until the output reaches this threshold. During start-up, the inductor peak current is limited (see Figure 2-21) to allow a correct start from a weak power supply, such as a solar cell, small coin battery or a discharged battery. Once the output voltage reaches 60-70% of the desired V_{OUT}, normal closed-loop PWM operation is initiated.

The MCP16251/2 charges an internal capacitor with a very weak current source. The voltage on this capacitor, in turn, slowly ramps the current limit of the boost switch to its nominal value. The soft-start capacitor is completely discharged in the event of a commanded shutdown or a thermal shutdown.

There is no undervoltage lockout feature for the MCP16251/2. The device will start switching at the lowest voltage possible, and run down to the lowest possible voltage. For a minimum 0.82V typical input, the device starts with regulated output under 1 mA resistive load. Real world loads are mostly non-resistive and allow device start-up at lower values, down to 0.65V. Working at very low input voltages may result in “motor-boating” for deeply discharged batteries.

4.2.2 PFM/PWM MODE

The MCP16251/2 devices are capable of automatically operating in normal PWM mode and PFM mode to maintain high efficiency at all loads. In PFM mode, the output ripple has a variable frequency component that changes with the input voltage and output current. The value of the output capacitor changes the low frequency component ripple. Output ripple peak-to-peak values are not affected by the output capacitor. With no load, the input current drawn from the battery is typically 14 µA. The device itself is powering from the output after start-up, the quiescent current drawn from output being less than 4 µA (typical, without feedback resistors divider current).

PFM operation is initiated if the output load current falls below an internally programmed threshold. The output voltage is continuously monitored. When the output voltage drops below its nominal value, PFM operation pulses once or several times to bring the output back into regulation. If the output load current rises above the upper threshold, the MCP16251/2 enters smoothly into PWM mode.

In PWM operation, the MCP16251/2 operates as a fixed frequency, synchronous boost converter. The switching frequency is internally maintained with a precision oscillator, typically set to 500 kHz. By operating in PWM-only mode, the output ripple remains low and the frequency is constant.

Lossless current sensing converts the peak current signal to a voltage to sum with the internal slope compensation signal. This summed signal is compared to the voltage error amplifier output to provide a peak current control command for the PWM signal. The slope compensation is adaptive to the input and output voltage. Therefore, the converter provides the proper amount of slope compensation to ensure stability, but is not excessive, which causes a loss of phase margin. The peak current limit is set to 650 mA typical.

4.2.3 ADJUSTABLE OUTPUT VOLTAGE AND MAXIMUM OUTPUT CURRENT

The MCP16251/2 output voltage is adjustable with a resistor divider over a 1.8V minimum-to-5.5V maximum range. High value resistors are recommended to minimize quiescent current to keep efficiency high at light loads. When an application runs below -20°C, smaller values for feedback resistors should be used to avoid any alteration of V_{OUT}, because of the leakage path on PCBs.

The maximum device output current is dependent on the input and output voltage. For example, to ensure a 100 mA load current for V_{OUT} = 3.3V, a minimum of 1.1 – 1.2V input voltage is necessary. If an application is powered by one Li-Ion battery (V_{IN} from 3.0V to 4.2V), the maximum load current the MCP16251/2 can deliver is close to 200 mA at 5.0V output (refer to Figure 2-10).

4.2.4 ENABLE

The enable pin is used to turn the boost converter on and off. The enable threshold voltage varies with input voltage. To enable the boost converter, the EN voltage level must be greater than 70% of the V_{IN} voltage. To disable the boost converter, the EN voltage must be lower than 20% of the V_{IN} voltage.

4.2.5 INTERNAL BIAS

The MCP16251/2 gets its start-up bias from V_{IN}. Once the output exceeds the input, bias comes from the output. Therefore, once started, operation is completely independent of V_{IN}. Operation is limited only by the output power level and the input source series resistance. Once started, the output will remain in regulation down to 0.35V input with 1 mA output current for low source impedance inputs.

© 2013 - 2016 Microchip Technology Inc.

chanhvinh.com

4.2.6 INTERNAL COMPENSATION

The error amplifier, with its associated compensation network, completes the closed-loop system by comparing the output voltage to a reference at the input of the error amplifier, and feeding the amplified and inverted signal to the control input of the inner current loop. The compensation network provides phase leads and lags at appropriate frequencies to cancel excessive phase lags and leads of the power circuit. All necessary compensation and slope compensation components are integrated.

4.2.7 SHORT-CIRCUIT PROTECTION

Unlike most boost converters, the MCP16251/2 allows its output to be shorted during normal operation. The internal current limit and overtemperature protection limit excessive stress and protect the device during periods of short circuit, overcurrent and overtemperature. While operating in Input-to-Output Bypass mode, the P-Channel current limit is inhibited to minimize quiescent current.

4.2.8 LOW NOISE OPERATION

The MCP16251/2 integrates a low noise anti-ring switch that damps the oscillations typically observed at the switch node of a boost converter when operating in Discontinuous Inductor Current mode. This removes the high frequency radiated noise.

4.2.9 OVERTEMPERATURE PROTECTION

Overtemperature protection circuitry is integrated in the MCP16251/2 devices. This circuitry monitors the device junction temperature and shuts the output off if the junction temperature exceeds the typical +160°C. If this threshold is exceeded, the device will automatically restart once the junction temperature drops by 20°C. During thermal shutdown, the device is periodically checking temperature; once the temperature of the die drops, the device restarts. Because the device takes its bias from the output (to achieve lower I_Q current) while in thermal shutdown state, there is no low reference band gap and the output may be higher than zero for inputs below 1.4V typical. The soft start is reset during an overtemperature condition.

chanhvinh.com

chanhvinh.com

5.0 APPLICATION INFORMATION

5.1 Typical Applications

The MCP16251/2 synchronous boost regulator operates over a wide input and output voltage range. The power efficiency is high for several decades of load range. Output current capability increases with the input voltage and decreases with the increasing output voltage. The maximum output current is based on the N-Channel peak current limit. Typical characterization curves in this data sheet are presented to display the typical output current capability.

5.2 Adjustable Output Voltage Calculations

To calculate the resistor divider values for the MCP16251/2, use Equation 5-1, where R_{TOP} is connected to V_{OUT}, R_{BOT} is connected to GND and both are connected to the V_{FB} input pin.

EQUATION 5-1:

$$R_{TOP} = R_{BOT} \times \left(\frac{V_{OUT}}{V_{FB}} - 1 \right)$$

EXAMPLE 1:

V_{OUT} = 2.0V
V_{FB} = 1.23V
R_{BOT} = 1 MΩ
R_{TOP} = 626.01 kΩ (with a standard value of 620 kΩ, V_{OUT} is 1.992V)

EXAMPLE 2:

V_{OUT} = 3.3V
V_{FB} = 1.23V
R_{BOT} = 1 MΩ
R_{TOP} = 1.68 MΩ (with a standard value of 1.69 MΩ, V_{OUT} is 3.308V)

EXAMPLE 3:

V_{OUT} = 5.0V
V_{FB} = 1.23V
R_{BOT} = 1 MΩ
R_{TOP} = 3.065 MΩ (with a standard value of 3.09 MΩ, V_{OUT} is 5.03V)

The internal error amplifier is a transconductance type, i.e., its gain is not related to the resistors' value. There are some potential issues with higher value resistors. For small surface mount resistors, environment contamination can create leakage paths that significantly change the resistor divider ratio and change the output voltage tolerance. Designers should use resistors that are larger than 1 MΩ with precaution; they can be used on limited temperature range (-20 to +85°C). For a lower temperature (down to -40°C), resistors from Examples 1 or 2 should be calculated as follows:

EXAMPLE 4:

V_{OUT} = 2.0V
V_{FB} = 1.23V
R_{BOT} = 309 kΩ
R_{TOP} = 193.44 kΩ (with a standard value of 191 kΩ, V_{OUT} is 1.99V)

EXAMPLE 5:

V_{OUT} = 3.3V
V_{FB} = 1.23V
R_{BOT} = 309 kΩ
R_{TOP} = 520.024 kΩ (with a standard value of 523 kΩ, V_{OUT} is 3.311V)

Smaller feedback resistor values will increase the quiescent current drained from the battery by a few µA, but will result in good regulation over the entire temperature range.

For boost converters, the removal of the feedback resistors during operation must be avoided. In this case, the output voltage will increase above the absolute maximum output limits of the MCP16251/2 and damage the device (for additional information, see Application Note AN1337, *"Optimizing Battery Life in DC Boost Converters Using MCP1640",* DS01337.

5.3 Input Capacitor Selection

The boost input current is smoothed by the boost inductor, reducing the amount of filtering necessary at the input. Some capacitance is recommended to provide decoupling from the source. Low ESR X5R or X7R are well suited, since they have a low temperature coefficient and small size. For most applications, 4.7 µF of capacitance is sufficient at the input. For high-power applications that have high-source impedance or long leads connecting the battery to the input, 10 µF of capacitance is recommended. Additional input capacitance can be added to provide a stable input voltage.

Refer to Table 5-1 for the recommended range of the input capacitor value.

© 2013 - 2016 Microchip Technology Inc.

chanhvinh.com

5.4 Output Capacitor Selection

The output capacitor helps provide a stable output voltage during sudden load transients and reduces the output voltage ripple. As with the input capacitor, X5R and X7R ceramic capacitors are well suited for this application. Using other capacitor types (aluminum or tantalum) with large ESR has impact on the converter's efficiency (see AN1337) and maximum output power.

The MCP16251/2 is internally compensated, so the output capacitance range is limited. See Table 5-1 for the recommended output capacitor range.

An output capacitance higher than 10 µF adds a better load step response and high-frequency noise attenuation, especially while stepping from light current loads (PFM mode) to heavy current loads (PWM mode). A minimum of 20 µF output capacitance is mandatory while the output drives load steps between heavy load levels. In addition, 2 x 10 µF output capacitors ensure a better recovery of the output after a short period of overloading.

While the N-Channel switch is ON, the output current is supplied by the output capacitor C_{OUT}. The amount of output capacitance and equivalent series resistance will have a significant effect on the output ripple voltage. While C_{OUT} provides load current, a voltage drop also appears across its internal ESR that results in ripple voltage.

EQUATION 5-2:

$$I_{OUT} = C_{OUT} \times \left(\frac{dV}{dt}\right)$$

Where:

dV = Ripple voltage

dt = ON time of the N-Channel switch ($D \times 1/F_{SW}$, D is duty cycle)

Table 5-1 contains the recommended range for the input and output capacitor values.

TABLE 5-1: CAPACITOR VALUE RANGE

	C_{IN}	C_{OUT}
Minimum	4.7 µF	10 µF
Maximum	none	47 µF

5.5 Inductor Selection

The MCP16251/2 is designed to be used with small surface mount inductors; the inductance value can range from 2.2 µH to 6.8 µH. An inductance value of 4.7 µH is recommended to achieve a good balance between the inductor size, converter load transient response and minimized noise.

TABLE 5-2: MCP16251/2 RECOMMENDED INDUCTORS

Part Number	Value (µH)	DCR Ω (typ.)	I_{SAT} (A)	Size WxLxH (mm)
Coiltronics®				
SD3112	4.7	0.246	0.80	3.1x3.1x1.2
SD3114	4.7	0.251	1.14	3.1x3.1x1.4
SD3118	4.7	0.162	1.31	3.8x3.8x1.2
SD25	4.7	0.0467	1.83	5.0x5.0x2.5
Wurth Elektronik				
WE-TPC Type Tiny	4.7	0.100	1.7	2.8x2.8x2.8
WE-TPC Type TH	4.7	0.200	0.8	2.8x2.8x1.35
WE-TPC Type S	4.7	0.105	0.90	3.8x3.8x1.65
WE-TPC Type M	4.7	0.082	1.65	4.8x4.8x1.8
Sumida Corporation				
CMD4D06	4.7	0.216	0.75	3.5x4.3x2
CDRH4D	4.7	0.09	0.800	4.6x4.6x1.5
Coilcraft				
XPL2010	4.7	0.336	0.75	1.9x2x1.0
ME3220	4.7	0.190	1.5	2.5x3.2x2.0
XFL3010	4.7	0.217	1.1	3x3x1.0
XFL3012	4.7	0.143	1.0	3x3x1.2
EPL3012	4.7	0.165	1.0	3x3x1.3
LPS4018	4.7	0.125	1.8	4x4x1.8
XFL4020	4.7	0.052	2.0	4x4x2.1
TDK Corporation				
VLS3015ET -4R7M	4.7	0.113	1.1	3x3x1.5
B82462 G4472M	4.7	0.04	1.8	6x6x3
B82462 A4472M	4.7	0.08	2.8	6x6x3

chanhvinh.com

Several parameters are used to select the inductor correctly: maximum rated current, saturation current and copper resistance (ESR). For boost converters, the inductor current can be much higher than the output current. The lower the inductor ESR, the higher the efficiency of the converter, a common trade-off in size versus efficiency.

The saturation current typically specifies a point at which the inductance has rolled off a percentage of the rated value. This can range from a 20-to-40% reduction in inductance. As the inductance rolls off, the inductor ripple current increases, as does the peak switch current. It is important to keep the inductance from rolling off too much, causing switch current to reach the peak limit.

5.6 One-Cell Application Considerations

The MCP16251/2 was designed to operate with a wide input voltage range after start-up, down to 0.35V, to accommodate a large variety of input sources. When considering a primary power solution for a design, the battery type and load current needs must be carefully selected.

The MCP16251/2 start-up voltage is typical 0.82V at 1 mA load but this does not act as an UVLO start-up threshold. The start-up sequence is detailed in **Section 4.2.1 "Low-Voltage Start-up"** and begins with the charging of the output capacitor at limited, constant current until the output voltage equals the input voltage. The device starts draining current to bias its internal circuitry before the 0.82V input and cannot start-up or operate well with high-impedance sources because their voltage varies in time, from zero to over 0.82V (i.e., energy harvesting). Start-up voltage is the point where the device starts switching in closed loop and the output is regulated and depends on load and temperature as shown in Figures 2-12, 2-13 and 2-14.

There are a few aspects to deal with when designing a step-up converter supplied from one alkaline or rechargeable cell. Batteries are available in a variety of sizes and chemistries and can support a variety of drain rates.

No matter the chemistry, most batteries have several things in common. They should not be drained below their specified FEP (Functional End Point or Cut-Off Voltage). Below this point, if the battery has a load applied to it, there will not be enough energy to deliver power because all usable capacity is used. For an alkaline cell, FEP is 0.9V or 0.8V. Using the alkaline cell below the FEP will increase the risk of leakage. There is an exception for alkaline batteries: if the battery voltage is strictly monitored, it can be drained down to 0.5V in one-cell applications only. For a rechargeable NiMH cell, the FEP value is usually 1.0V – 1.1V.

As the battery discharges, its deliverable energy or capacity decreases and the internal resistance increases. For example, the internal resistance of an alkaline cell goes up to 1Ω when discharged causing a voltage drop of up to hundreds of mV on the battery terminals under load conditions. This aspect will result in the converter's inability to start-up properly in applications which require short periods of ON time and long periods of Sleep. When the load is removed, the battery voltage slowly recovers. These long cycles may bring the battery voltage close to its nominal value. However, a nearly depleted battery will not be capable of maintaining its voltage once the heavier load is applied during the next cycle. At each attempt, the converter drains a large amount of current to restart (see Figure 2-21), weakening the battery even further. As the battery voltage recovers in time, the converter will try to start-up as soon as its minimum input voltage-vs.-load condition is reached.

In conclusion, with a battery discharged down to its FEP, a boost converter may start-up and work well under light load (in PFM mode), but will stop or lose regulation when a high load current is required.

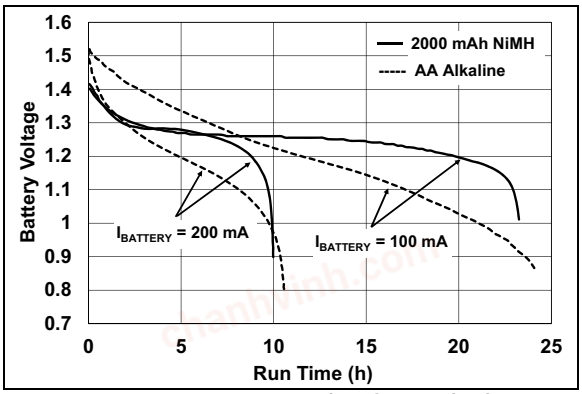

FIGURE 5-1: *Example of a Typical Constant-Current Load Discharge Profile for an Alkaline and NiMH Cell.*

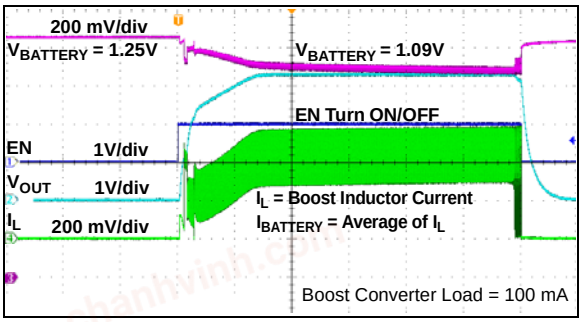

FIGURE 5-2: *MCP16251 3.3V_{OUT}/100 mA Boost Converter Waveforms Powered from One Alkaline Cell Discharged to 1.25V Open Load Voltage (Cell Internal Resistance Is Approximately 0.7 Ohms).*

© 2013 - 2016 Microchip Technology Inc.

chanhvinh.com

Another particular situation is powering a boost circuit from one rechargeable cell like NiMH or NiCd. These applications need an external MCU to monitor the cell voltage or a separate UVLO circuit to prevent deep discharging, which results in permanent cell damage. In a multi-cell powered application (e.g., 2.4V typ. from two NiMH cells) deep discharging will result in a reverse polarity charging of one of the cells due the unbalanced cell voltages, thus damaging the respective cell.

5.6.1 UVLO CIRCUIT FOR SINGLE-CELL APPLICATIONS

In single-cell battery applications, it is not always possible to monitor the start-up and shut-down voltages using a MCU (due to MCU's features or to I/O pin count limitations).

One simple way to implement a ULVO circuit is a simple diode placed between the V_{IN} pin (with anode) and EN pin (with cathode) and a bias resistor from EN to GND.

Another example which shows an additional ultra low power undervoltage lockout (UVLO) circuit with Start and Stop thresholds is shown in Figure 5-3. Both thresholds are programmable (1.15V to start and 0.8V to stop the converter functionality) and new values can be easily calculated using Equations 5-3 and 5-4. The UVLO circuit consumes 0.5 µA up to max. 2 µA from one battery.

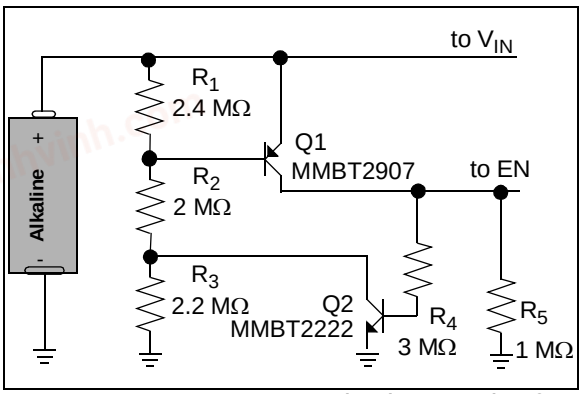

FIGURE 5-3: *UVLO Circuit Example of a Low Voltage Boost Converter with 1.15V Start and 0.8V Stop Thresholds.*

EQUATION 5-3:

$$ULVO_{START} \sim 0.4 \times \frac{(R_1 + R_2 + R_3)}{R_1}$$

EQUATION 5-4:

$$ULVO_{STOP} \sim 0.4 \times \frac{(R_1 + R_2)}{R_1}$$

where:

0.4 is V_{EBQ1} for selected MΩ resistors range. It increases to 0.6 if resistors are in kΩ range.

5.7 Thermal Calculations

The MCP16251/2 is available in two different packages (SOT-23-6 and 2x3x0.8 TDFN-8). By calculating the power dissipation and applying the package thermal resistance (θ_{JA}), the junction temperature is estimated. The maximum continuous junction temperature rating for the MCP16251/2 family of devices is +125°C.

To quickly estimate the internal power dissipation for the switching boost regulator, an empirical calculation using measured efficiency can be used. Given the measured efficiency, the internal power dissipation is estimated by Equation 5-5.

EQUATION 5-5:

$$\left(\frac{V_{OUT} \times I_{OUT}}{Efficiency}\right) - (V_{OUT} \times I_{OUT}) = P_{Dis}$$

The difference between the first term, input power, and the second term, power delivered, is the internal MCP16251/2 power dissipation. This is an estimate which assumes that most of the power lost is internal to the MCP16251/2 and not to the C_{IN}, C_{OUT} and/or the inductor. There is some percentage of power lost in the boost inductor, with very little loss in the input and output capacitors. For a more accurate estimation of internal power dissipation, subtract the $I_{INRMS}^2 \times L_{ESR}$ power dissipation.

5.8 PCB Layout Information

Good printed circuit board layout techniques are important to any switching circuitry, and switching power supplies are no different. When wiring the switching high current paths, short and wide traces should be used. Therefore, it is important that the input and output capacitors be placed as close as possible to the MCP16251/2 to minimize the loop area.

The feedback resistors and feedback signal should be routed away from the switching node and the switching current loop. When possible, ground planes and traces should be used to help shield the feedback signal and minimize noise and magnetic interference.

© 2013 - 2016 Microchip Technology Inc.

chanhvinh.com

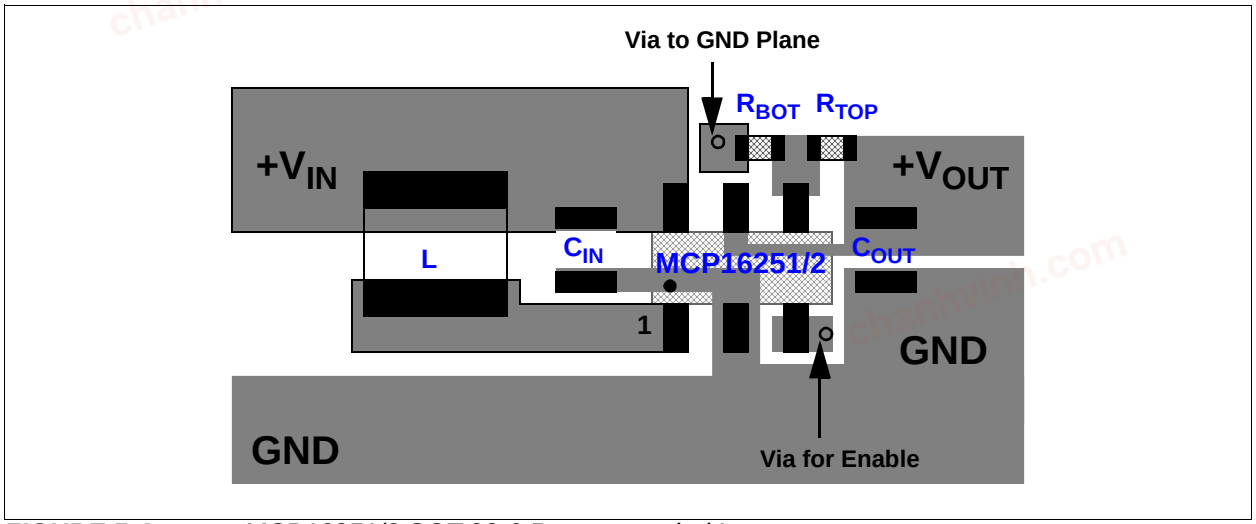

FIGURE 5-4: *MCP16251/2 SOT-23-6 Recommended Layout.*

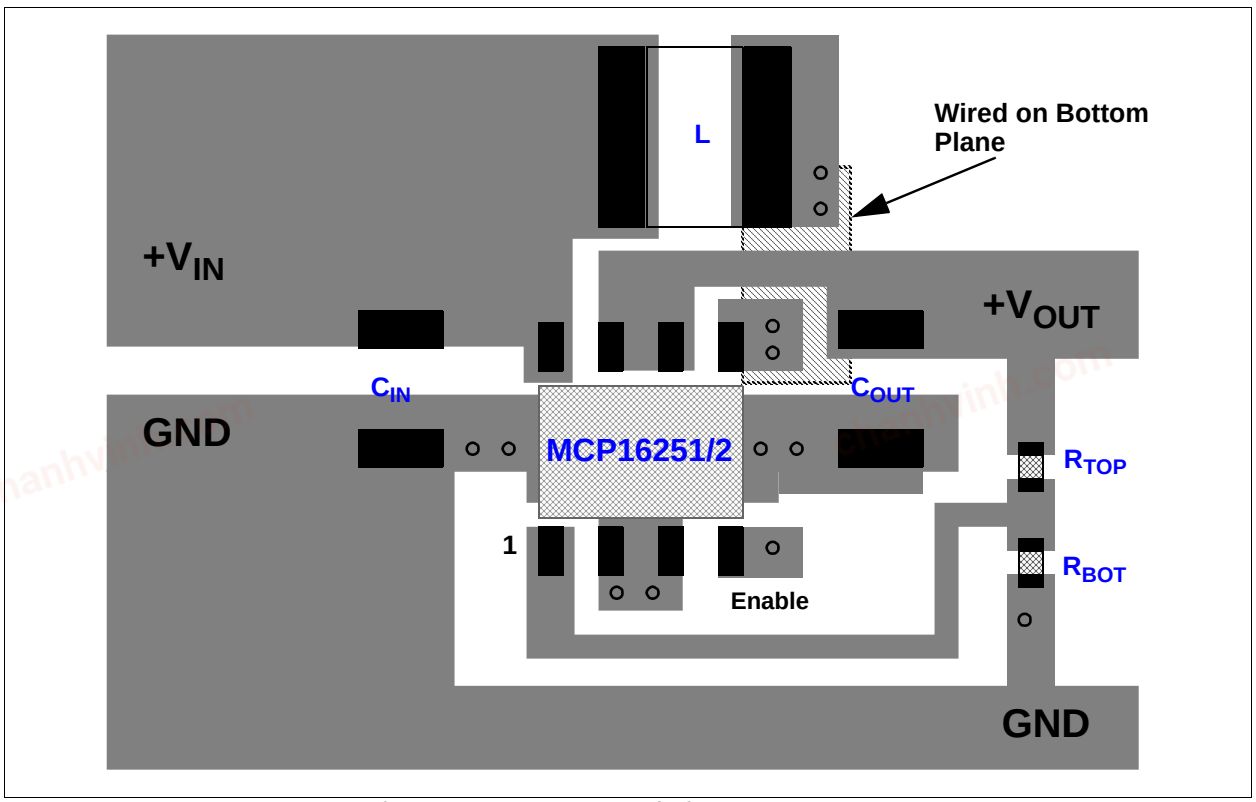

FIGURE 5-5: *MCP16251/2 TDFN-8 Recommended Layout.*

© 2013 - 2016 Microchip Technology Inc.

chanhvinh.com

6.0 TYPICAL APPLICATION CIRCUITS

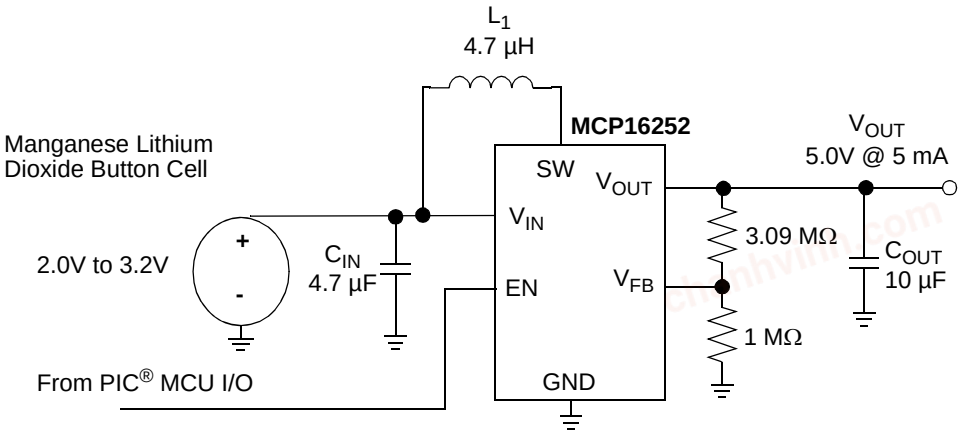

Note: For applications that can operate directly from the battery input voltage during Standby mode and require a higher voltage during Normal Run mode, the MCP16252 device provides input-to-output bypass, when disabled. Here, the PIC® microcontroller is powered by the output of the MCP16252. One of the microcontroller's I/O pins is used to enable and disable the MCP16252, and to control its bias voltage. While in Shutdown mode, the MCP16252 input current is typically 0.6 µA.

FIGURE 6-1: *Manganese Lithium Coin Cell Application using I/O Bypass Mode.*

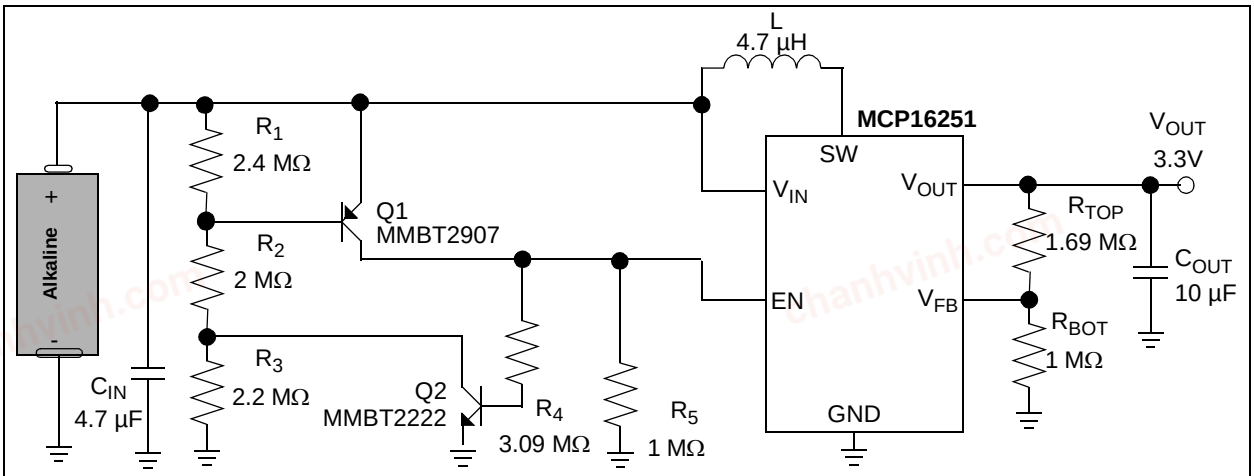

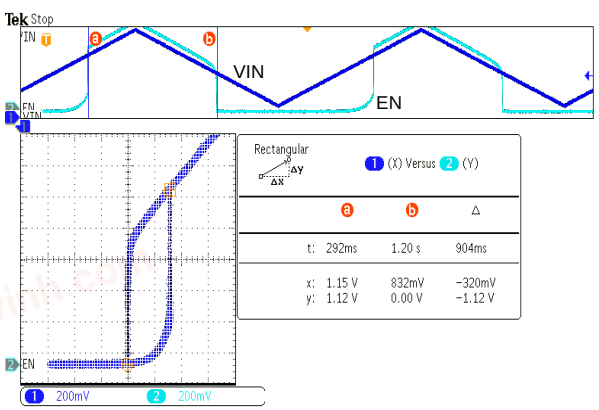

Note: This is a simple low I_Q one-cell boost converter with an external ULVO circuit. The EN pin is kept high as long as the battery voltage is higher than 0.8V. The converter will not (re)start if the battery voltage is lower than 1.1V and will stop working (EN goes low level) if battery voltage drops below 0.8V.

The external ULVO circuit consumes approximately 0.5 µA from a discharged battery and max. 2 µA from a fresh battery.

$$ULVO_{START} = 0.4 \times \frac{(R_1 + R_2 + R_3)}{R_1}$$

$$ULVO_{STOP} = 0.4 \times \frac{(R_1 + R_2)}{R_1}$$

FIGURE 6-2: *MCP16251 with an External ULVO Circuit.*

chanhvinh.com

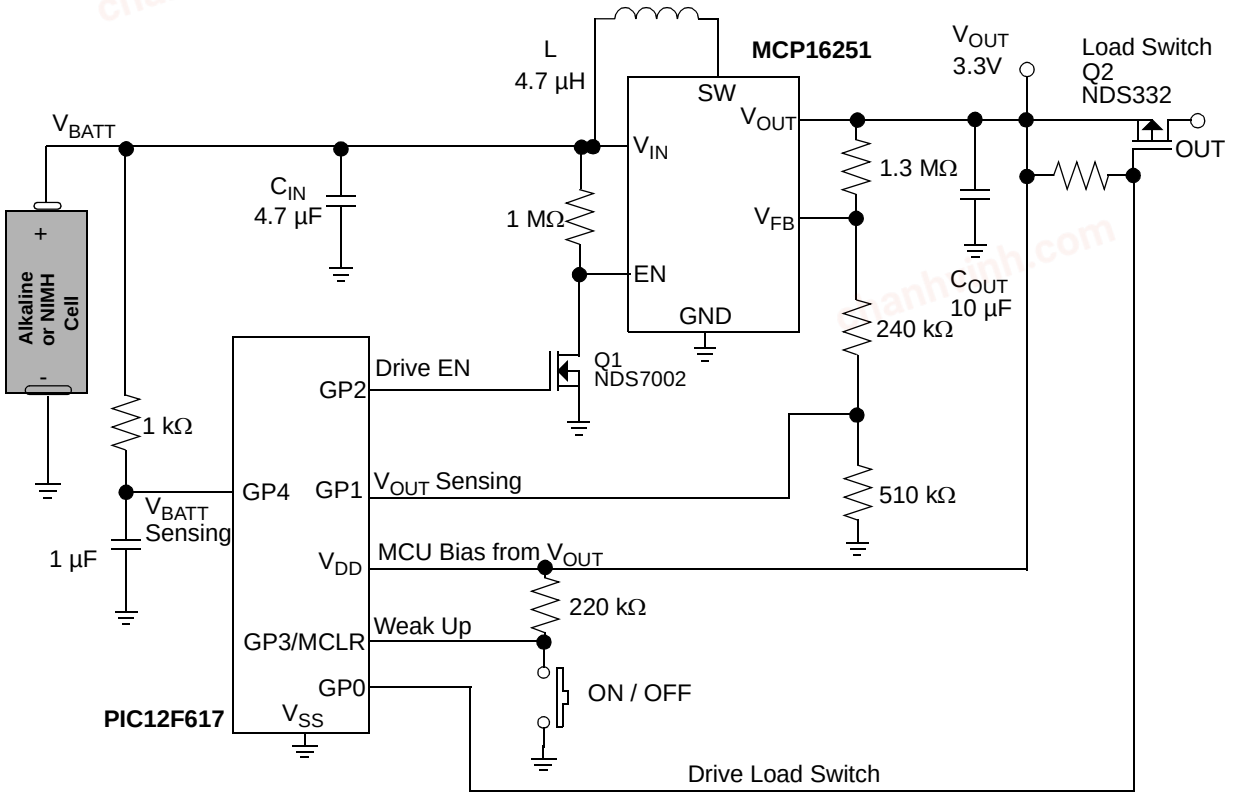

Note: Application example for a simple low I_Q one-cell boost converter attached to a PIC® MCU to monitor battery and output converter voltages and drive a load switch. When battery is connected, EN is pulled high by a 1 MΩ resistor and the converter starts regulating V_{OUT}, biasing the PIC MCU. The push button is used to switch on and off the load switch and put the PIC MCU in Deep Sleep mode. Battery energy is saved during the time when no power is needed for the load by pulsing the EN pin with low frequency to keep the output in a 2.3-to-3.3V range for the V_{DD} pin of the PIC MCU. A detailed description of this application can be found in the *"MCP1640 Single Quadruple-A Battery Boost Converter Reference Design"*, (DS51922) and in application note AN1337, *"Optimizing Battery Life in DC Boost Converters Using MCP1640"*, (DS01337).

FIGURE 6-3: *Application showing a PIC® MCU attached to the MCP16251 to help optimize battery life, and monitor the battery and output voltages.*

© 2013 - 2016 Microchip Technology Inc.

chanhvinh.com

7.0 PACKAGING INFORMATION

7.1 Package Marking Information

6-Lead SOT-23

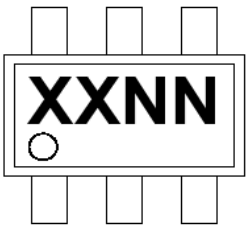

Part Number	Code
MCP16251T-I/CH	MBNN
MCP16252T-I/CH	MCNN

Example:

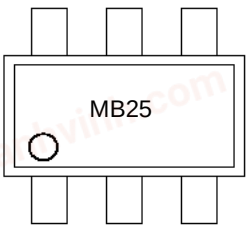

8-Lead TDFN (2x3x0.8)



Part Number	Code
MCP16251T-I/MNY	ABP
MCP16252T-I/MNY	ABQ

Example:

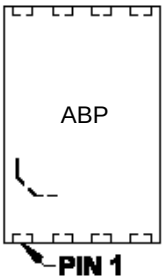

Legend:	XX...X	Customer-specific information
	Y	Year code (last digit of calendar year)
	YY	Year code (last 2 digits of calendar year)
	WW	Week code (week of January 1 is week ‘01’)
	NNN	Alphanumeric traceability code
	(e3)	Pb-free JEDEC designator for Matte Tin (Sn)
	*	This package is Pb-free. The Pb-free JEDEC designator ((e3)) can be found on the outer packaging for this package.

Note: In the event the full Microchip part number cannot be marked on one line, it will be carried over to the next line, thus limiting the number of available characters for customer-specific information.

chanhvinh.com

6-Lead Plastic Small Outline Transistor (CH) [SOT-23]

Note: For the most current package drawings, please see the Microchip Packaging Specification located at http://www.microchip.com/packaging

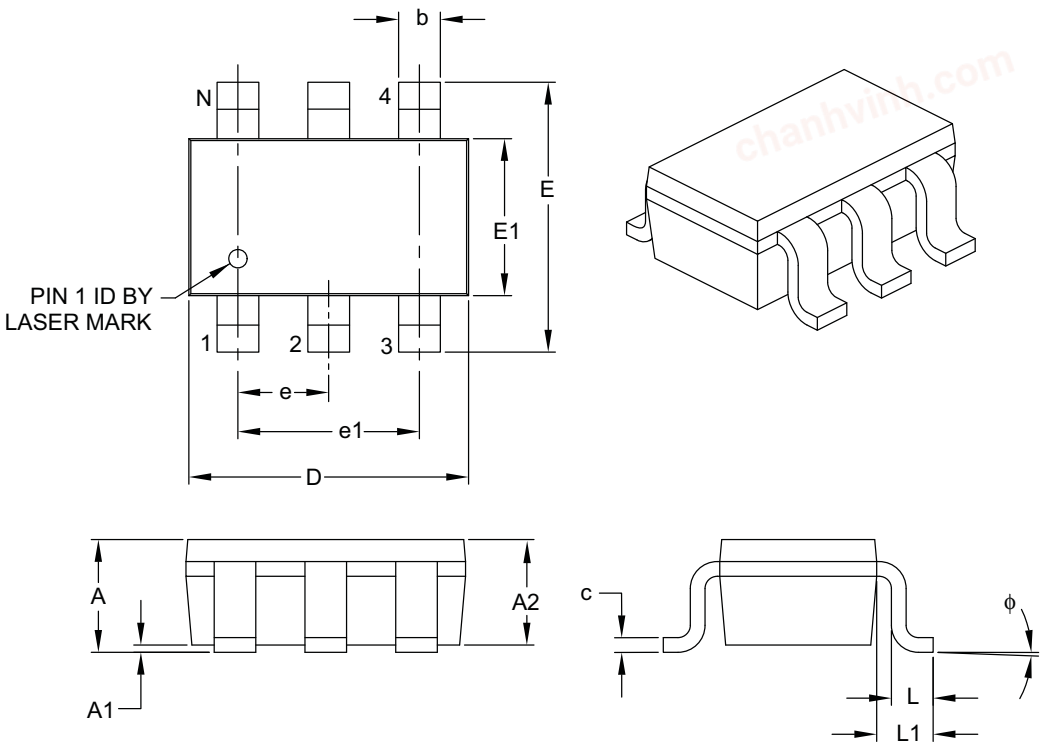

Units		MILLIMETERS		
Dimension Limits		MIN	NOM	MAX
Number of Pins	N		6	
Pitch	e		0.95 BSC	
Outside Lead Pitch	e1		1.90 BSC	
Overall Height	A	0.90	–	1.45
Molded Package Thickness	A2	0.89	–	1.30
Standoff	A1	0.00	–	0.15
Overall Width	E	2.20	–	3.20
Molded Package Width	E1	1.30	–	1.80
Overall Length	D	2.70	–	3.10
Foot Length	L	0.10	–	0.60
Footprint	L1	0.35	–	0.80
Foot Angle	ϕ	0°	–	30°
Lead Thickness	c	0.08	–	0.26
Lead Width	b	0.20	–	0.51

Notes:

1. Dimensions D and E1 do not include mold flash or protrusions. Mold flash or protrusions shall not exceed 0.127 mm per side.
2. Dimensioning and tolerancing per ASME Y14.5M.

BSC: Basic Dimension. Theoretically exact value shown without tolerances.

Microchip Technology Drawing C04-028B

© 2013 - 2016 Microchip Technology Inc.

chanhvinh.com

6-Lead Plastic Small Outline Transistor (CH) [SOT-23]

Note: For the most current package drawings, please see the Microchip Packaging Specification located at http://www.microchip.com/packaging

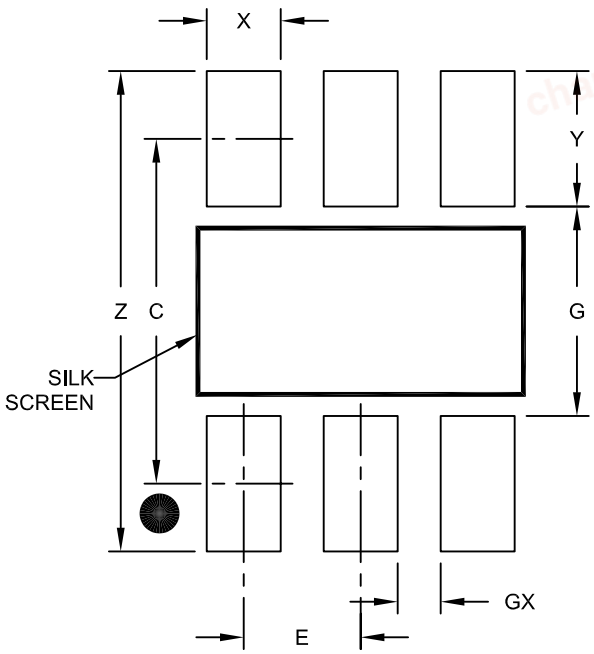

RECOMMENDED LAND PATTERN

Units		MILLIMETERS		
Dimension Limits		MIN	NOM	MAX
Contact Pitch	E		0.95 BSC	
Contact Pad Spacing	C		2.80	
Contact Pad Width (X6)	X			0.60
Contact Pad Length (X6)	Y			1.10
Distance Between Pads	G	1.70		
Distance Between Pads	GX	0.35		
Overall Width	Z			3.90

Notes:

1. Dimensioning and tolerancing per ASME Y14.5M

BSC: Basic Dimension. Theoretically exact value shown without tolerances.

Microchip Technology Drawing No. C04-2028A

chanhvinh.com

8-Lead Plastic Dual Flat, No Lead Package (MNY) – 2x3x0.8 mm Body [TDFN]
With 1.4x1.3 mm Exposed Pad (JEDEC Package type WDFN)

Note:	For the most current package drawings, please see the Microchip Packaging Specification located at http://www.microchip.com/packaging

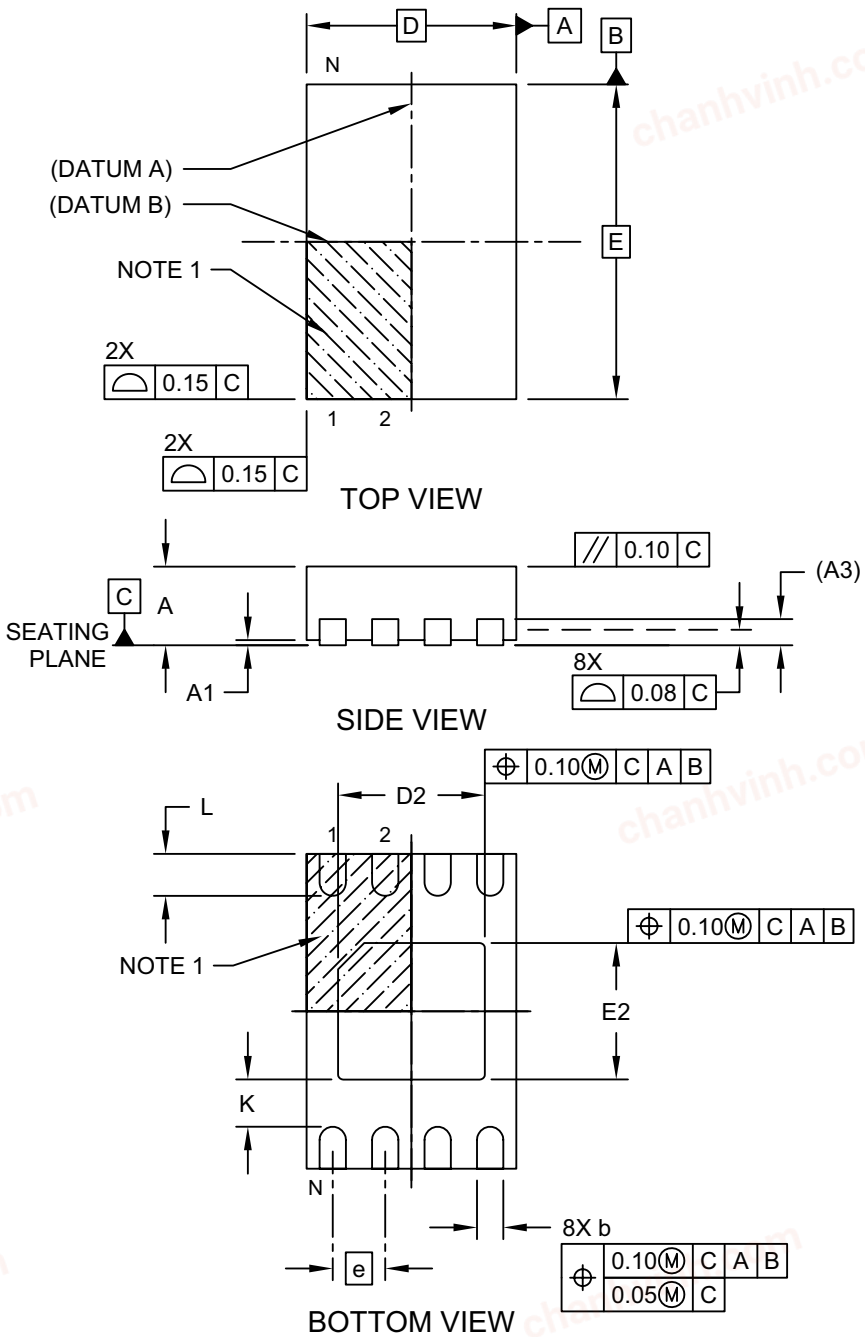

Microchip Technology Drawing No. C04-129-MNY Rev E Sheet 1 of 2

© 2013 - 2016 Microchip Technology Inc.

chanhvinh.com

8-Lead Plastic Dual Flat, No Lead Package (MNY) – 2x3x0.8 mm Body [TDFN] With 1.4x1.3 mm Exposed Pad (JEDEC Package type WDFN)

Note: For the most current package drawings, please see the Microchip Packaging Specification located at http://www.microchip.com/packaging

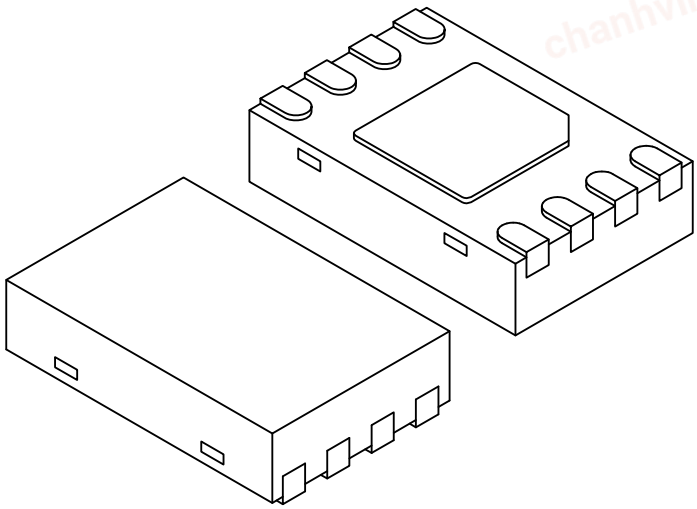

Units		MILLIMETERS		
Dimension Limits		MIN	NOM	MAX
Number of Pins	N		8	
Pitch	e		0.50 BSC	
Overall Height	A	0.70	0.75	0.80
Standoff	A1	0.00	0.02	0.05
Contact Thickness	A3		0.20 REF	
Overall Length	D		2.00 BSC	
Overall Width	E		3.00 BSC	
Exposed Pad Length	D2	1.35	1.40	1.45
Exposed Pad Width	E2	1.25	1.30	1.35
Contact Width	b	0.20	0.25	0.30
Contact Length	L	0.25	0.30	0.45
Contact-to-Exposed Pad	K	0.20	-	-

Notes:

1. Pin 1 visual index feature may vary, but must be located within the hatched area.
2. Package may have one or more exposed tie bars at ends.
3. Package is saw singulated
4. Dimensioning and tolerancing per ASME Y14.5M

BSC: Basic Dimension. Theoretically exact value shown without tolerances.
REF: Reference Dimension, usually without tolerance, for information purposes only.

Microchip Technology Drawing No. C04-129-MNY Rev E Sheet 2 of 2

chanhvinh.com

8-Lead Plastic Dual Flat, No Lead Package (MNY) – 2x3x0.8 mm Body [TDFN] With 1.4x1.3 mm Exposed Pad (JEDEC Package type WDFN)

Note: For the most current package drawings, please see the Microchip Packaging Specification located at http://www.microchip.com/packaging

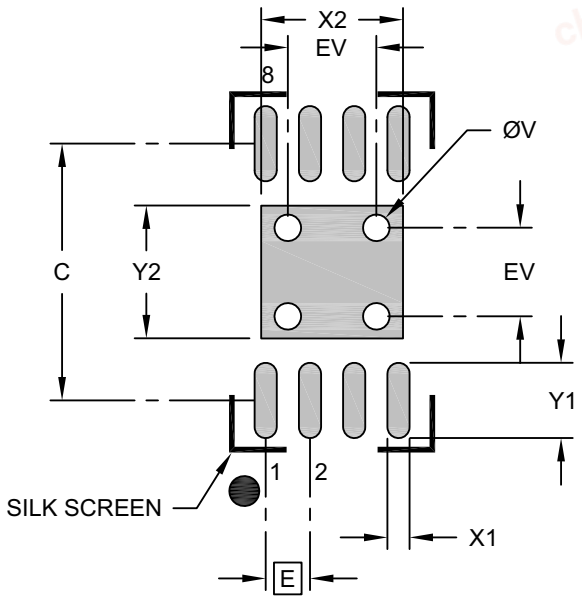

RECOMMENDED LAND PATTERN

Units		MILLIMETERS		
Dimension Limits		MIN	NOM	MAX
Contact Pitch	E		0.50 BSC	
Optional Center Pad Width	X2			1.60
Optional Center Pad Length	Y2			1.50
Contact Pad Spacing	C		2.90	
Contact Pad Width (X8)	X1			0.25
Contact Pad Length (X8)	Y1			0.85
Thermal Via Diameter	V		0.30	
Thermal Via Pitch	EV		1.00	

Notes:

1. Dimensioning and tolerancing per ASME Y14.5M
   BSC: Basic Dimension. Theoretically exact value shown without tolerances.
2. For best soldering results, thermal vias, if used, should be filled or tented to avoid solder loss during reflow process

Microchip Technology Drawing No. C04-129-MNY Rev. B

© 2013 - 2016 Microchip Technology Inc.

chanhvinh.com

APPENDIX A: REVISION HISTORY

Revision B (September 2016)

The following is the list of modifications:

- Added **Section 5.6 “One-Cell Application Considerations”**.
- Updated **Section 6.0 “Typical Application Circuits”**.
- Minor typographical corrections

Revision A (March 2013)

- Original Release of this Document.

chanhvinh.com

chanhvinh.com

NOTES:

chanhvinh.com

© 2013 - 2016 Microchip Technology Inc.

chanhvinh.com

PRODUCT IDENTIFICATION SYSTEM

To order or obtain information, e.g., on pricing or delivery, refer to the factory or the listed sales office.

PART NO.	X	-X	/XX
Device	Tape and Reel	Temperature Range	Package

Device:	MCP16251T:	Low Quiescent Current, PFM/PWM Synchronous Boost Regulator, True Output Disconnect Shutdown Option (Tape and Reel)
	MCP16252T:	Low Quiescent Current, PFM/PWM Synchronous Boost Regulator, Input-to-Output Bypass Shutdown Option (Tape and Reel)
Temperature Range:	I =	-40°C to +85°C (Industrial)
Package:	CH =	Plastic Small Outline Transistor, SOT-23, 6-lead
	MNY* =	Lead Plastic Dual Flat, No Lead Package, 2x3x0.8 mm TDFN, 8-lead
	*Y =	Nickel palladium gold manufacturing designator

Examples:

a)	MCP16251T-I/CH:	Tape and Reel Industrial Temperature 6LD SOT-23 Package
b)	MCP16251T-I/MNY:	Tape and Reel Industrial Temperature 8LD 2x3 TDFN Package
a)	MCP16252T-I/CH:	Tape and Reel Industrial Temperature 6LD SOT-23 Package
b)	MCP16252T-I/MNY:	Tape and Reel Industrial Temperature 8LD 2x3 TDFN Package

chanhvinh.com

chanhvinh.com

NOTES:

chanhvinh.com

© 2013 - 2016 Microchip Technology Inc.

chanhvinh.com

Note the following details of the code protection feature on Microchip devices:

- Microchip products meet the specification contained in their particular Microchip Data Sheet.
- Microchip believes that its family of products is one of the most secure families of its kind on the market today, when used in the intended manner and under normal conditions.
- There are dishonest and possibly illegal methods used to breach the code protection feature. All of these methods, to our knowledge, require using the Microchip products in a manner outside the operating specifications contained in Microchip's Data Sheets. Most likely, the person doing so is engaged in theft of intellectual property.
- Microchip is willing to work with the customer who is concerned about the integrity of their code.
- Neither Microchip nor any other semiconductor manufacturer can guarantee the security of their code. Code protection does not mean that we are guaranteeing the product as "unbreakable."

Code protection is constantly evolving. We at Microchip are committed to continuously improving the code protection features of our products. Attempts to break Microchip's code protection feature may be a violation of the Digital Millennium Copyright Act. If such acts allow unauthorized access to your software or other copyrighted work, you may have a right to sue for relief under that Act.

Information contained in this publication regarding device applications and the like is provided only for your convenience and may be superseded by updates. It is your responsibility to ensure that your application meets with your specifications. MICROCHIP MAKES NO REPRESENTATIONS OR WARRANTIES OF ANY KIND WHETHER EXPRESS OR IMPLIED, WRITTEN OR ORAL, STATUTORY OR OTHERWISE, RELATED TO THE INFORMATION, INCLUDING BUT NOT LIMITED TO ITS CONDITION, QUALITY, PERFORMANCE, MERCHANTABILITY OR FITNESS FOR PURPOSE**.** Microchip disclaims all liability arising from this information and its use. Use of Microchip devices in life support and/or safety applications is entirely at the buyer's risk, and the buyer agrees to defend, indemnify and hold harmless Microchip from any and all damages, claims, suits, or expenses resulting from such use. No licenses are conveyed, implicitly or otherwise, under any Microchip intellectual property rights unless otherwise stated.

Microchip received ISO/TS-16949:2009 certification for its worldwide headquarters, design and wafer fabrication facilities in Chandler and Tempe, Arizona; Gresham, Oregon and design centers in California and India. The Company's quality system processes and procedures are for its PIC® MCUs and dsPIC® DSCs, KEELOQ® code hopping devices, Serial EEPROMs, microperipherals, nonvolatile memory and analog products. In addition, Microchip's quality system for the design and manufacture of development systems is ISO 9001:2000 certified.

QUALITY MANAGEMENT SYSTEM
CERTIFIED BY DNV
═ ISO/TS 16949 ═

Trademarks

The Microchip name and logo, the Microchip logo, AnyRate, dsPIC, FlashFlex, flexPWR, Heldo, JukeBlox, KeeLoq, KeeLoq logo, Kleer, LANCheck, LINK MD, MediaLB, MOST, MOST logo, MPLAB, OptoLyzer, PIC, PICSTART, PIC32 logo, RightTouch, SpyNIC, SST, SST Logo, SuperFlash and UNI/O are registered trademarks of Microchip Technology Incorporated in the U.S.A. and other countries.

ClockWorks, The Embedded Control Solutions Company, ETHERSYNCH, Hyper Speed Control, HyperLight Load, IntelliMOS, mTouch, Precision Edge, and QUIET-WIRE are registered trademarks of Microchip Technology Incorporated in the U.S.A.

Analog-for-the-Digital Age, Any Capacitor, AnyIn, AnyOut, BodyCom, chipKIT, chipKIT logo, CodeGuard, dsPICDEM, dsPICDEM.net, Dynamic Average Matching, DAM, ECAN, EtherGREEN, In-Circuit Serial Programming, ICSP, Inter-Chip Connectivity, JitterBlocker, KleerNet, KleerNet logo, MiWi, motorBench, MPASM, MPF, MPLAB Certified logo, MPLIB, MPLINK, MultiTRAK, NetDetach, Omniscient Code Generation, PICDEM, PICDEM.net, PICkit, PICtail, PureSilicon, RightTouch logo, REAL ICE, Ripple Blocker, Serial Quad I/O, SQI, SuperSwitcher, SuperSwitcher II, Total Endurance, TSHARC, USBCheck, VariSense, ViewSpan, WiperLock, Wireless DNA, and ZENA are trademarks of Microchip Technology Incorporated in the U.S.A. and other countries.

SQTP is a service mark of Microchip Technology Incorporated in the U.S.A.

Silicon Storage Technology is a registered trademark of Microchip Technology Inc. in other countries.

GestIC is a registered trademark of Microchip Technology Germany II GmbH & Co. KG, a subsidiary of Microchip Technology Inc., in other countries.

All other trademarks mentioned herein are property of their respective companies.

© 2013 - 2016, Microchip Technology Incorporated, Printed in the U.S.A., All Rights Reserved.

ISBN: 978-1-5224-0953-3

chanhvinh.com

Worldwide Sales and Service

AMERICAS

Corporate Office
2355 West Chandler Blvd.
Chandler, AZ 85224-6199
Tel: 480-792-7200
Fax: 480-792-7277
Technical Support:
http://www.microchip.com/support
Web Address:
www.microchip.com

Atlanta
Duluth, GA
Tel: 678-957-9614
Fax: 678-957-1455

Austin, TX
Tel: 512-257-3370

Boston
Westborough, MA
Tel: 774-760-0087
Fax: 774-760-0088

Chicago
Itasca, IL
Tel: 630-285-0071
Fax: 630-285-0075

Cleveland
Independence, OH
Tel: 216-447-0464
Fax: 216-447-0643

Dallas
Addison, TX
Tel: 972-818-7423
Fax: 972-818-2924

Detroit
Novi, MI
Tel: 248-848-4000

Houston, TX
Tel: 281-894-5983

Indianapolis
Noblesville, IN
Tel: 317-773-8323
Fax: 317-773-5453

Los Angeles
Mission Viejo, CA
Tel: 949-462-9523
Fax: 949-462-9608

New York, NY
Tel: 631-435-6000

San Jose, CA
Tel: 408-735-9110

Canada - Toronto
Tel: 905-695-1980
Fax: 905-695-2078

ASIA/PACIFIC

Asia Pacific Office
Suites 3707-14, 37th Floor
Tower 6, The Gateway
Harbour City, Kowloon

Hong Kong
Tel: 852-2943-5100
Fax: 852-2401-3431

Australia - Sydney
Tel: 61-2-9868-6733
Fax: 61-2-9868-6755

China - Beijing
Tel: 86-10-8569-7000
Fax: 86-10-8528-2104

China - Chengdu
Tel: 86-28-8665-5511
Fax: 86-28-8665-7889

China - Chongqing
Tel: 86-23-8980-9588
Fax: 86-23-8980-9500

China - Dongguan
Tel: 86-769-8702-9880

China - Guangzhou
Tel: 86-20-8755-8029

China - Hangzhou
Tel: 86-571-8792-8115
Fax: 86-571-8792-8116

China - Hong Kong SAR
Tel: 852-2943-5100
Fax: 852-2401-3431

China - Nanjing
Tel: 86-25-8473-2460
Fax: 86-25-8473-2470

China - Qingdao
Tel: 86-532-8502-7355
Fax: 86-532-8502-7205

China - Shanghai
Tel: 86-21-5407-5533
Fax: 86-21-5407-5066

China - Shenyang
Tel: 86-24-2334-2829
Fax: 86-24-2334-2393

China - Shenzhen
Tel: 86-755-8864-2200
Fax: 86-755-8203-1760

China - Wuhan
Tel: 86-27-5980-5300
Fax: 86-27-5980-5118

China - Xian
Tel: 86-29-8833-7252
Fax: 86-29-8833-7256

ASIA/PACIFIC

China - Xiamen
Tel: 86-592-2388138
Fax: 86-592-2388130

China - Zhuhai
Tel: 86-756-3210040
Fax: 86-756-3210049

India - Bangalore
Tel: 91-80-3090-4444
Fax: 91-80-3090-4123

India - New Delhi
Tel: 91-11-4160-8631
Fax: 91-11-4160-8632

India - Pune
Tel: 91-20-3019-1500

Japan - Osaka
Tel: 81-6-6152-7160
Fax: 81-6-6152-9310

Japan - Tokyo
Tel: 81-3-6880- 3770
Fax: 81-3-6880-3771

Korea - Daegu
Tel: 82-53-744-4301
Fax: 82-53-744-4302

Korea - Seoul
Tel: 82-2-554-7200
Fax: 82-2-558-5932 or
82-2-558-5934

Malaysia - Kuala Lumpur
Tel: 60-3-6201-9857
Fax: 60-3-6201-9859

Malaysia - Penang
Tel: 60-4-227-8870
Fax: 60-4-227-4068

Philippines - Manila
Tel: 63-2-634-9065
Fax: 63-2-634-9069

Singapore
Tel: 65-6334-8870
Fax: 65-6334-8850

Taiwan - Hsin Chu
Tel: 886-3-5778-366
Fax: 886-3-5770-955

Taiwan - Kaohsiung
Tel: 886-7-213-7828

Taiwan - Taipei
Tel: 886-2-2508-8600
Fax: 886-2-2508-0102

Thailand - Bangkok
Tel: 66-2-694-1351
Fax: 66-2-694-1350

EUROPE

Austria - Wels
Tel: 43-7242-2244-39
Fax: 43-7242-2244-393

Denmark - Copenhagen
Tel: 45-4450-2828
Fax: 45-4485-2829

France - Paris
Tel: 33-1-69-53-63-20
Fax: 33-1-69-30-90-79

Germany - Dusseldorf
Tel: 49-2129-3766400

Germany - Karlsruhe
Tel: 49-721-625370

Germany - Munich
Tel: 49-89-627-144-0
Fax: 49-89-627-144-44

Italy - Milan
Tel: 39-0331-742611
Fax: 39-0331-466781

Italy - Venice
Tel: 39-049-7625286

Netherlands - Drunen
Tel: 31-416-690399
Fax: 31-416-690340

Poland - Warsaw
Tel: 48-22-3325737

Spain - Madrid
Tel: 34-91-708-08-90
Fax: 34-91-708-08-91

Sweden - Stockholm
Tel: 46-8-5090-4654

UK - Wokingham
Tel: 44-118-921-5800
Fax: 44-118-921-5820

06/23/16

© 2013 - 2016 Microchip Technology Inc.