chanhvinh.com

LED Driver with Average-Mode, Constant Current Control

Features

- Fast average current control
- Programmable constant off-time switching
- PWM / linear dimming input
- Output short circuit protection with skip mode
- Ambient operating temperature -40°C to +125°C
- Pin-compatible with the HV9910B and HV9961

Applications

- DC/DC or AC/DC LED driver applications
- LED backlight driver for LCD displays
- General purpose constant current source
- LED signage and displays
- Architectural and decorative LED lighting
- LED street lighting

General Description

The HV9861A is a patented, average-mode, constant current control LED driver IC operating in a constant off-time mode. Unlike the HV9910B, this control IC does not produce a peak-to-average error, and therefore greatly improves the accuracy, line and load regulation of the LED current without any need for loop compensation or high-side current sensing. The output LED current accuracy is ±3%.

The IC is equipped with a current limit comparator for hiccup-mode output short circuit protection. Internal over-temperature protection is provided. The internally regulated voltage (V_{DD}) for the HV9861A is 7.5V.

The IC can be powered from a 12 - 450V supply. A PWM dimming input is provided that accepts an external control TTL-compatible signal. The output current can be programmed by an internal 270mV reference, or controlled externally through a 0 - 1.5V dimming input.

The IC is pin-to-pin compatible with the Supertex HV9910B and HV9961, and can be used as a drop-in replacement for many applications to improve the LED current accuracy and regulation.

Typical Application Circuit

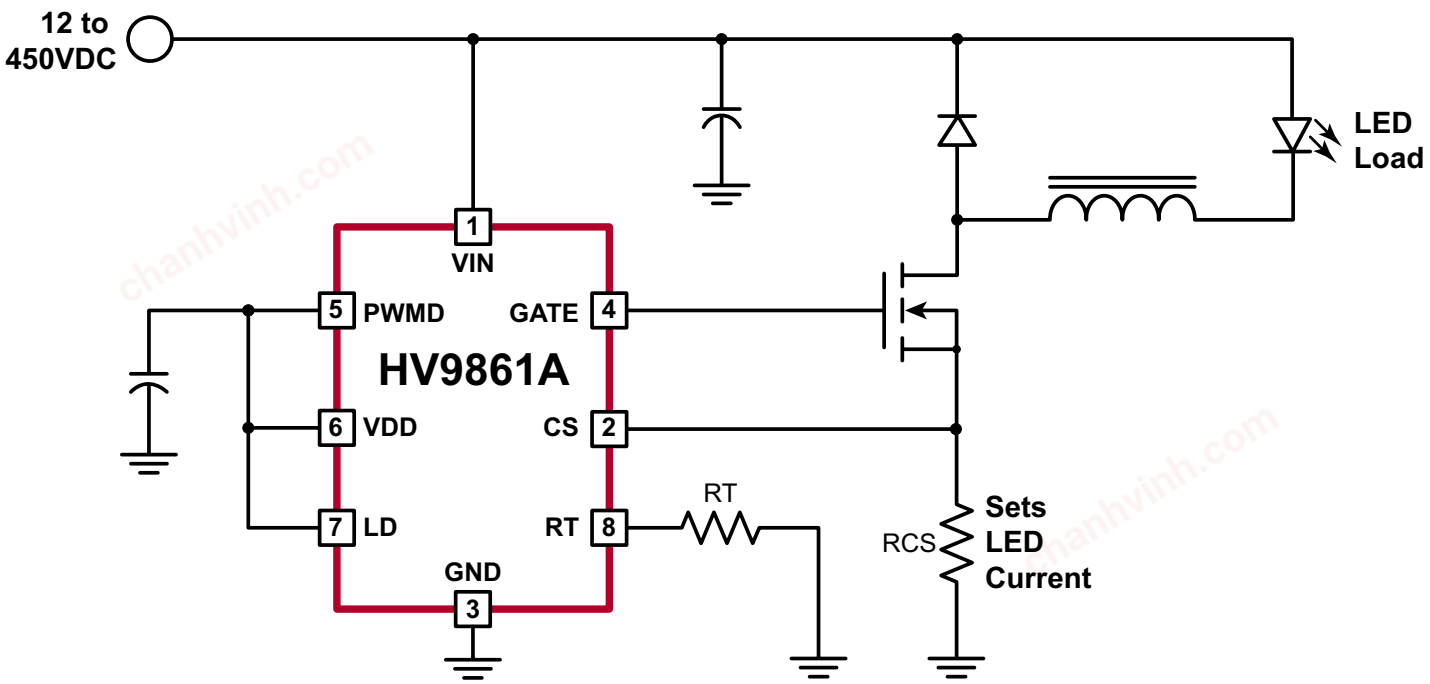

chanhvinh.com

Ordering Information

Device	Package Options	
	8-Lead SOIC *4.90x3.90mm body* *1.75mm height (max)* *1.27mm pitch*	16-Lead SOIC *9.90x3.90mm body* *1.75mm height (max)* *1.27mm pitch*
HV9861A	HV9861ALG-G	HV9861ANG-G

-G indicates package is RoHS compliant ('Green')

Pin Description

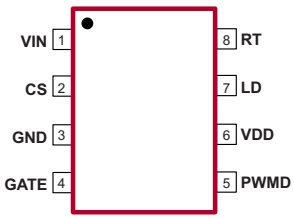

8-Lead SOIC (LG)
(top view)

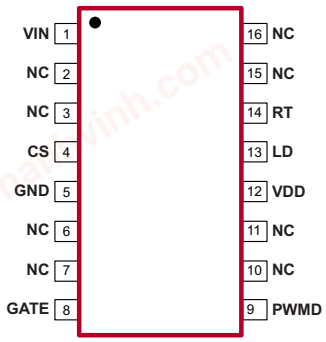

16-Lead SOIC (NG)
(top view)

Absolute Maximum Ratings

Parameter	Value
V_{IN} to GND	-0.5V to +470V
V_{DD} to GND	12V
CS, LD, PWMD, GATE, RT to GND	-0.3V to (V_{DD} +0.3V)
Junction temperature range	-40°C to +150°C
Storage temperature range	-65°C to +150°C
Continuous power dissipation *(T_A = +25°C)* 8-Lead SOIC 16-Lead SOIC	 650mW 1000mW

Stresses beyond those listed under "Absolute Maximum Ratings" may cause permanent damage to the device. These are stress ratings only, and functional operation of the device at these or any other conditions beyond those indicated in the operational sections of the specifications is not implied. Exposure to absolute maximum rating conditions for extended periods may affect device reliability.

Product Marking



Y = Last Digit of Year Sealed
WW = Week Sealed
L = Lot Number
_____ = "Green" Packaging

Package may or may not include the following marks: Si or

8-Lead SOIC (LG)

Top Marking

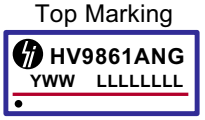

Bottom Marking

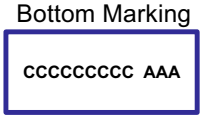

Y = Last Digit of Year Sealed
WW = Week Sealed
L = Lot Number
C = Country of Origin*
A = Assembler ID*
_____ = "Green" Packaging

**May be part of top marking*

Package may or may not include the following marks: Si or

16-Lead SOIC (NG)

Thermal Resistance

Package	θ_{JA}
8-Lead SOIC	128°C/W
16-Lead SOIC	82°C/W

Electrical Characteristics *(Specifications are at T_A = 25°C. V_{IN} = 12V, V_{LD} = V_{DD}, PWMD = V_{DD} unless otherwise noted))*

Sym	Description		Min	Typ	Max	Unit	Conditions
Input							
V_{INDC}	Input DC supply voltage range[1]	*	12	-	450	V	DC input voltage
I_{INSD}	Shut-down mode supply current	*	-	0.5	1	mA	Pin PWMD to GND

Notes:

1. *Also limited by package power dissipation limit, whichever is lower.*

* *Denotes the specifications which apply over the full operating ambient temperature range of -40°C < T_A < +125°C.*

chanhvinh.com

Electrical Characteristics *(Specifications are at T_A = 25°C. V_{IN} = 12V, V_{LD} = V_{DD}, PWMD = V_{DD} unless otherwise noted))*

Sym	Description		Min	Typ	Max	Unit	Conditions
Internal Regulator							
V_{DD}	Internally regulated voltage	-	7.25	7.50	7.75	V	500pF at GATE; R_T = 226kΩ
$\Delta V_{DD,\ line}$	Line regulation of V_{DD}	-	-	-	1	V	V_{IN} = 12 - 450V, 500pF at GATE; R_T = 226kΩ
$\Delta V_{DD,\ load}$	Load regulation of V_{DD}	-	-	-	100	mV	$I_{DD(ext)}$ = 0 - 1mA, 500pF at GATE; R_T = 226kΩ
UVLO	V_{DD} undervoltage lockout threshold	*	6.45	-	-	V	V_{IN} rising
ΔUVLO	V_{DD} undervoltage lockout hysteresis	-	-	500	-	mV	V_{IN} falling
$\Delta V_{DD(UV)}$	V_{DD} voltage margin	*	500	-	-	mV	$\Delta V_{DD(UV)} = V_{DD}$ - UVLO
$I_{IN,MAX}$	Maximum input current (limited by UVLO)	#	3.5	-	-	mA	V_{IN} = 12V, T_A = 25°C
		#	1.5	-	-		V_{IN} = 12V, T_A = 125°C
PWM Dimming							
$V_{EN(lo)}$	PWMD input low voltage	*	-	-	0.8	V	V_{IN} = 12 - 450V
$V_{EN(hi)}$	PWMD input high voltage	*	2.2	-	-	V	V_{IN} = 12 - 450V
I_{EN}	Internal pull-down current at PWMD	-	8.5	-	13.5	µA	V_{PWMD} = 0.8V
Average Current Sense Logic							
V_{CS}	Current sense reference voltage	-	262	-	280	mV	---
$A_{V(LD)}$	LD-to-CS voltage ratio	-	0.175	-	0.182	-	---
$A_V \bullet V_{LD(OFFSET)}$	LD-to-CS voltage offset	-	-10	-	10	mV	Offset = V_{CS} - ($A_{V(LD)} \bullet V_{LD}$); V_{LD} = 1.2V
$\Delta V_{CS(TEMP)}$	CS threshold temp regulation	#	-	-	5	mV	---
$V_{LD(OFF)}$	LD input voltage, shutdown	-	-	150	-	mV	V_{LD} falling
$\Delta V_{LD(OFF)}$	LD input voltage, enable	-	-	200	-	mV	V_{LD} rising
T_{BLANK}	Current sense blanking interval	*	140	-	290	ns	---
$T_{ON(min)}$	Minimum on-time	-	-	-	760	ns	CS = V_{CS} + 30mV
D_{MAX}	Maximum steady-state duty cycle	*	80	-	-	%	Reduction in output LED current may occur beyond this duty cycle
Short Circuit Protection							
V_{CS}	Hiccup threshold voltage	*	410	-	500	mV	---
T_{DELAY}	Current limit delay CS-to-GATE	-	-	-	150	ns	CS = V_{CS} + 30mV
T_{HICCUP}	Short circuit hiccup time	-	500	-	850	µs	---
$T_{ON(min)}$	Minimum on-time (short circuit)	-	-	-	430	ns	CS = V_{DD}

Notes:

* *Denotes the specifications which apply over the full operating ambient temperature range of -40°C < T_A < +125°C.*

\# *Guaranteed by design.*

chanhvinh.com

Electrical Characteristics *(Specifications are at T_A = 25°C. V_{IN} = 12V, V_{LD} = V_{DD}, PWMD = V_{DD} unless otherwise noted))*

Sym	Description		Min	Typ	Max	Unit	Conditions
T_{OFF} Timer							
T_{OFF}	Off-time	-	32	40	48	µs	R_T = 1MΩ
		-	8	10	12		R_T = 226kΩ
GATE Driver							
I_{SOURCE}	Sourcing current	-	0.165	-	-	A	V_{GATE} = 0V, V_{DD} = 7.5V
I_{SINK}	Sinking current	-	0.165	-	-	A	V_{GATE} = V_{DD}, V_{DD} = 7.5V
t_{RISE}	Output rise time	-	-	30	50	ns	C_{GATE} = 500pF, V_{DD} = 7.5V
t_{FALL}	Output fall time	-	-	30	50	ns	C_{GATE} = 500pF, V_{DD} = 7.5V
Over-temperature Protection							
T_{SD}	Shut-down temperature	#	128	140	-	°C	---
ΔT_{SD}	Hysteresis	#	-	20	-	°C	---

Notes:
 # Guaranteed by design.

Functional Block Diagram

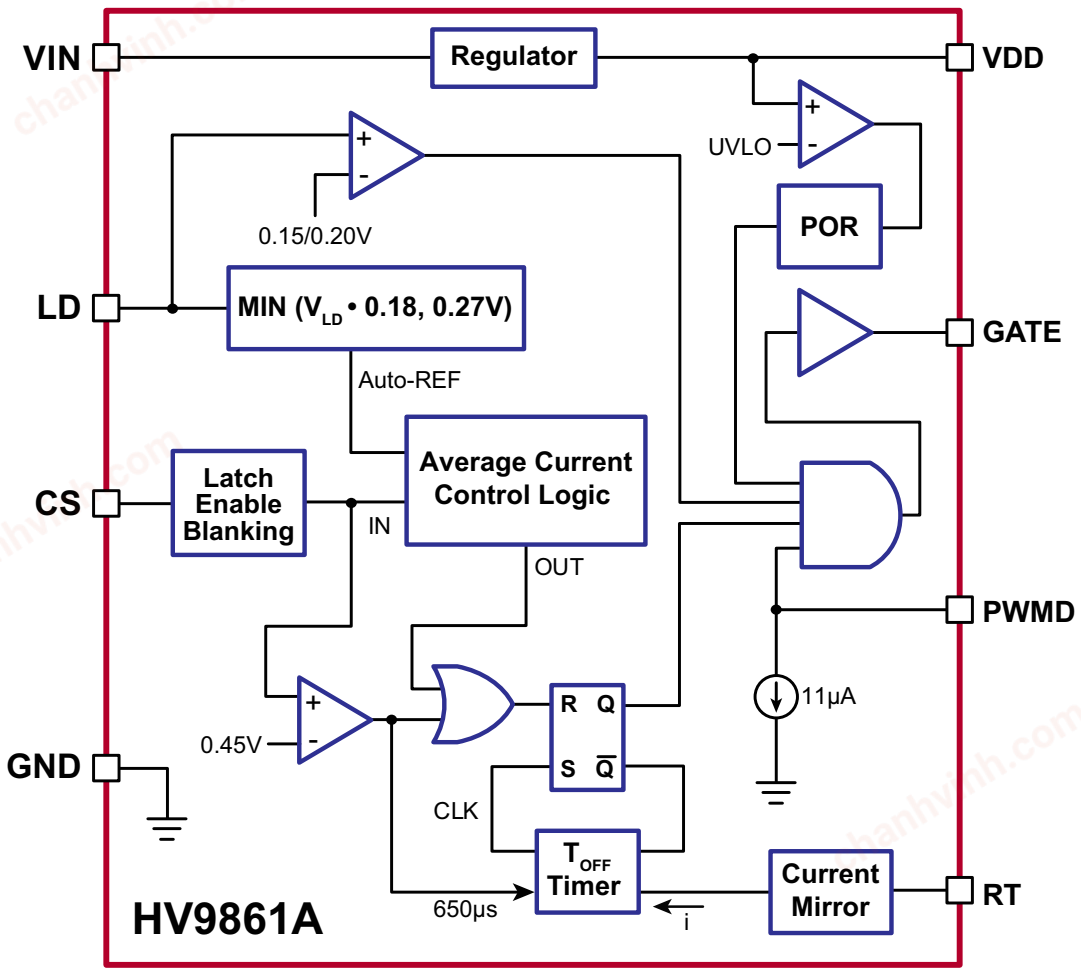

chanhvinh.com

Application Information

General Description

Peak-current control (as in the HV9910B) of a buck converter is the most economical and simple way to regulate its output current. However, it suffers accuracy and regulation problems that arise from the so-called peak-to-average current error, contributed to by the current ripple in the output inductor and the propagation delay in the current sense comparator. The full inductor current signal is unavailable for direct sensing at the ground potential in a buck converter when the control switch is referenced to the same ground potential because the control switch is only conducting for small periods. While it is very simple to detect the peak current in the switch, controlling the average inductor current is usually implemented by level translating the sense signal from $+V_{IN}$. Though this is practical for relatively low input voltage V_{IN}, this type of average-current control may become excessively complex and expensive in offline AC or other high-voltage DC applications.

The HV9861A employs Supertex' patented control scheme, achieving fast and very accurate control of average current in the buck inductor through sensing the switch current only. No compensation of the current control loop is required. The LED current response to PWMD input is similar to that of the HV9910B. The inductor current ripple amplitude does not affect this control scheme significantly, and therefore, the LED current is independent of the variation in inductance, switching frequency or output voltage. Constant off-time control of the buck converter is used for stability and to improve the LED current regulation over a wide range of input voltages. (Note that, unlike the HV9910B, this IC does not support the constant-frequency mode of operation.)

OFF Timer

The timing resistor connected to RT determines the off-time of the gate driver, and it must be wired to GND. (Wiring this resistor to GATE as with the HV9910B is no longer supported.) The equation governing the off-time of the GATE output is given by:

$$T_{OFF}(\mu s) = \frac{R_T(k\Omega)}{25} + 0.3 \quad (1)$$

Within the range of $30k\Omega \le R_T \le 1.0M\Omega$.

Average Current Control Feedback and Output Short Circuit Protection

The current through the switching MOSFET source is averaged and used to give constant-current feedback. This current is detected using a sense resistor at the CS pin. The feedback operates in a fast open-loop mode. No compensation is required. Output current is programmed simply as:

$$I_{LED} = \frac{0.27V}{R_{CS}} \quad (2)$$

When the voltage at the LD input $V_{LD} \ge 1.5V$. Otherwise:

$$I_{LED} = \frac{V_{LD} \cdot 0.18}{R_{CS}} \quad (3)$$

The above equations are only valid for continuous conduction of the output inductor. It is a good practice to design the inductor such that the switching ripple current in it is 30~40% of its average peak-to-peak, full load, DC current. Hence, the recommended inductance can be calculated as:

$$L_O = \frac{V_{O(MAX)} \cdot T_{OFF}}{0.4 \cdot I_O} \quad (4)$$

The duty-cycle range of the current control feedback is limited to $D \le 0.8$. A reduction in the LED current may occur when the LED string voltage V_O is greater than 80% of the input voltage V_{IN} of the HV9861A LED driver.

Reducing the output LED voltage V_O below $V_{O(MIN)} = V_{IN} \cdot D_{MIN}$, where $D_{MIN} = 760ns/(T_{OFF} + 760ns)$, may also result in the loss of regulation of the LED current. This condition, however, causes an increase in the LED current and can potentially trip the short-circuit protection comparator.

The typical output characteristic of the HV9861A LED driver is shown in Fig.1. The corresponding HV9910B characteristic is given for comparison.

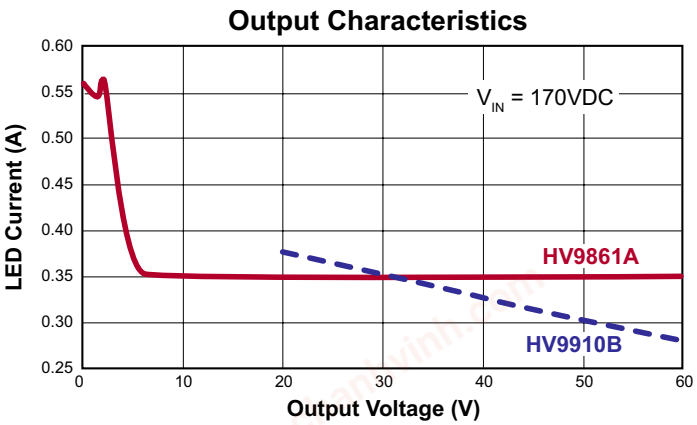

Fig.1. Typical output characteristic of an HV9861A LED driver.

chanhvinh.com

The short circuit protection comparator trips when the voltage at CS exceeds 0.45V. When this occurs, the GATE off-time T_{HICCUP} = 650µs is generated to prevent stair-casing of the inductor current and potentially its saturation due to insufficient output voltage. The typical short-circuit current is shown in the waveform of Fig. 2.

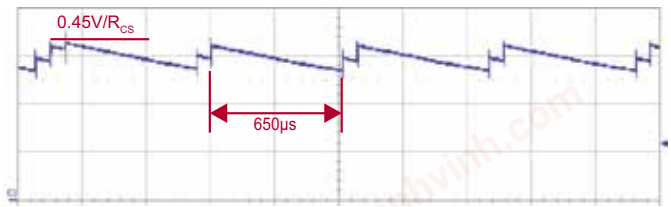

Fig.2. Short-circuit inductor current.

A leading-edge blanking delay is provided at CS to prevent false triggering of the current feedback and the short circuit protection.

Linear Dimming

When the voltage at LD falls below 1.5V, the internal 270mV reference to the constant-current feedback becomes overridden by V_{LD} • 0.18. As long as the current in the inductor remains continuous, the LED current is given by the equation (3) above. However, when V_{LD} falls below 150mV, the GATE output becomes disabled. The GATE signal recovers, when V_{LD} exceeds 200mV. This is required in some applications to be able to shut the LED lamp off with the same signal input that controls the brightness. The typical linear dimming response is shown in Fig.3.

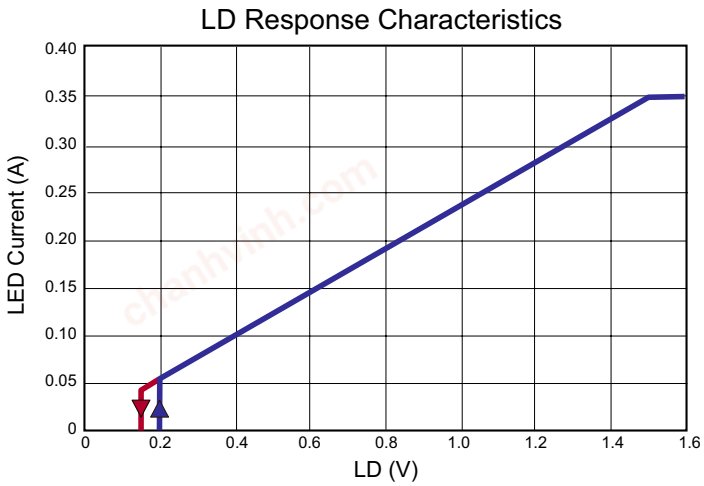

Fig.3. Typical linear dimming response of an HV9861A LED driver

The linear dimming input could also be used for "mixed-mode" dimming to expand the dimming ratio. In such case a pulse-width modulated signal of a measured amplitude below 1.5V should be applied at LD.

Input Voltage Regulator

The HV9861A can be powered directly from a 12 ~ 450VDC supply through its VIN input. When this voltage is applied at the VIN pin, the HV9861A maintains a constant 7.5V level at VDD. This voltage can be used to power the IC and external circuitry connected to VDD within the rated maximum current or within the thermal ratings of the package, whichever limit is lower. The VDD pin must be bypassed by a low ESR capacitor to provide a low impedance path for the high frequency current of the GATE output. The HV9861A can also be powered through the VDD pin directly with a voltage greater than the internally regulated 7.5V, but less than 12V.

Despite the instantaneous voltage rating of 450V, continuous voltage at VIN is limited by the power dissipation in the package. For example, when these ICs draw I_{IN} = 2.0mA from the VIN input, and the 8-lead SOIC package is used, the maximum continuous voltage at VIN is limited to:

$$V_{IN(MAX)} = \frac{T_{J(MAX)} - T_A}{R_{\theta,J\text{-}A} \bullet I_{IN}} = 390V \qquad (5)$$

Where the ambient temperature T_A = 25°C, the maximum working junction temperature $T_{J(MAX)}$ = 125°C, the junction-to-ambient thermal resistance $R_{\theta,JA}$ = 128°C/W.

In such cases, when it is needed to operate the HV9861A from a higher voltage, a resistor or a Zener diode can be added in series with the VIN input to divert some of the power loss from the IC. In the above example, using a 100V Zener diode will allow the circuit to work up to 490V. The input current drawn from the VIN pin is represented by the following equation:

$$I_{IN} \approx 1.0mA + Q_G \bullet f_S \qquad (6)$$

In the above equation, f_S is the switching frequency, and Q_G is the GATE charge of the external FET obtained from the manufacturer's datasheet.

GATE Output

The GATE output of the HV9861A is used to drive an external MOSFET. It is recommended that the gate charge Q_G of the external MOSFET be less than 25nC for switching frequencies ≤100kHz and less than 15nC for switching frequencies >100kHz.

chanhvinh.com

PWM Dimming

Due to the fast open-loop response of the average-mode current control loop of the HV9861A, the PWM dimming performance nearly matches that of the HV9910B. The inductor current waveform comparison is shown in Fig. 4.

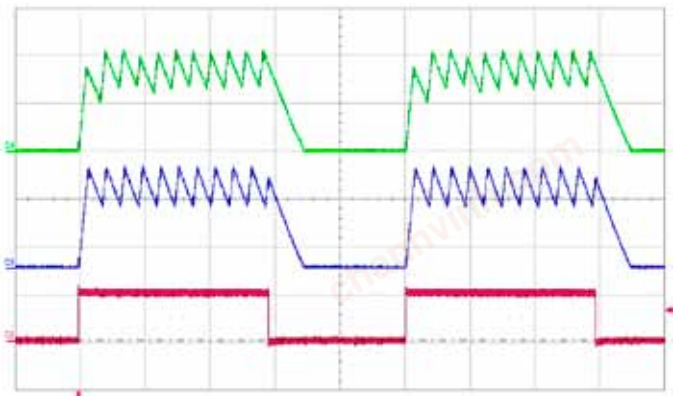

Fig.4. Typical PWM dimming response of an HV9861A LED driver.

[CH2 (red): PWMD; CH4 (green): Inductor Current; CH3 (blue): Same as HV9910B for comparison]

The rising and falling edges are limited by the current slew rate in the inductor. The first switching cycle is terminated upon reaching the 270mV (V_{LD} • 0.18) level at CS. The circuit is further reaching its steady-state within 3~4 switching cycles regardless of the switching frequency.

Pin Description

Pin #		Function	Description
8-Lead SOIC	16-Lead SOIC		
1	1	VIN	This pin is the input of an 12 - 450V linear regulator.
2	4	CS	This pin is the current sense pin used to sense the FET current by means of an external sense resistor.
3	5	GND	Ground return for all internal circuitry. This pin must be electrically connected to the ground of the power train.
4	8	GATE	This pin is the output GATE driver for an external N-channel power MOSFET.
5	9	PWMD	This is the PWM dimming input of the IC. When this pin is pulled to GND, the gate driver is turned off. When the pin is pulled high, the gate driver operates normally.
6	12	VDD	This is the power supply pin for all internal circuits. It must be bypassed with a low ESR capacitor to GND (at least 0.1µF).
7	13	LD	This pin is the linear dimming input, and it sets the current sense threshold as long as the voltage at this pin is less than 1.5V. If voltage at LD falls below 150mV, the GATE output is disabled. The GATE signal recovers at 200mV at LD.
8	14	RT	A resistor connected between this pin and GND programs the GATE off-time.
-	2, 3, 6, 7, 10, 11, 15, 16	NC	No connection.

chanhvinh.com

8-Lead SOIC (Narrow Body) Package Outline (LG)

4.90x3.90mm body, 1.75mm height (max), 1.27mm pitch

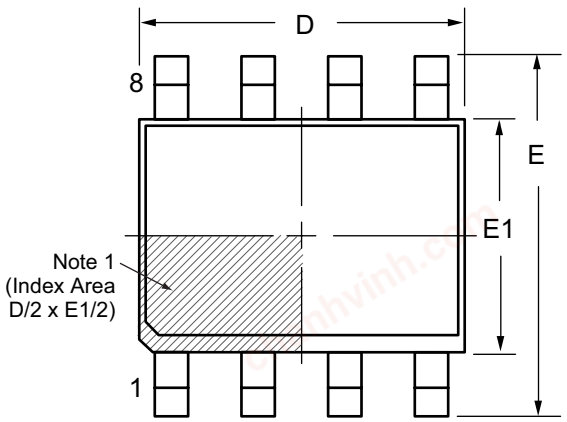

Top View

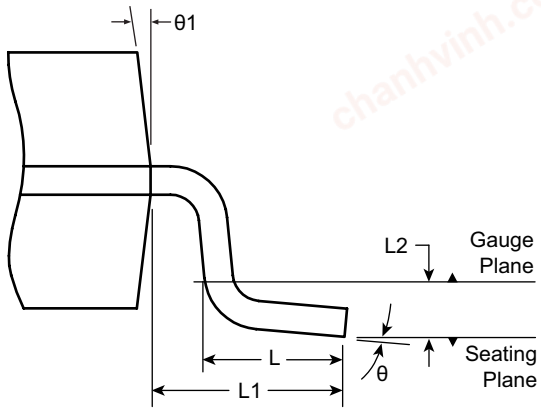

View B

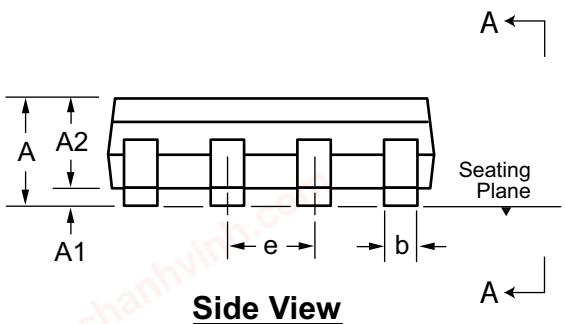

Side View

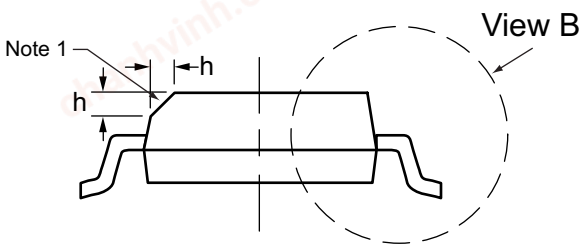

View A-A

Note:

1. *This chamfer feature is optional. A Pin 1 identifier must be located in the index area indicated. The Pin 1 identifier can be: a molded mark/identifier; an embedded metal marker; or a printed indicator.*

Symbol		A	A1	A2	b	D	E	E1	e	h	L	L1	L2	θ	θ1
Dimension (mm)	MIN	1.35*	0.10	1.25	0.31	4.80*	5.80*	3.80*	1.27 BSC	0.25	0.40	1.04 REF	0.25 BSC	0°	5°
	NOM	-	-	-	-	4.90	6.00	3.90		-	-			-	-
	MAX	1.75	0.25	1.65*	0.51	5.00*	6.20*	4.00*		0.50	1.27			8°	15°

JEDEC Registration MS-012, Variation AA, Issue E, Sept. 2005.
** This dimension is not specified in the JEDEC drawing.*
Drawings are not to scale.
Supertex Doc. #: *DSPD-8SOLGTG, Version I041309.*

chanhvinh.com

16-Lead SOIC (Narrow Body) Package Outline (NG)

9.90x3.90mm body, 1.75mm height (max), 1.27mm pitch

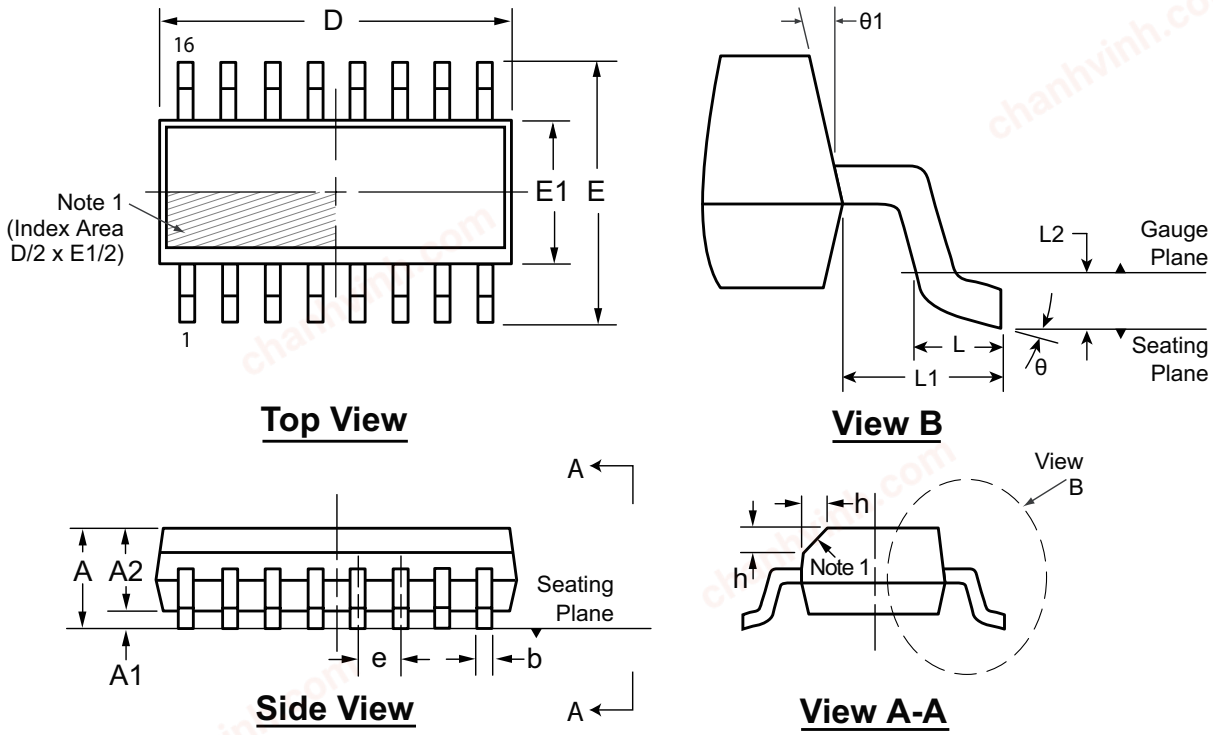

Note:

1. *This chamfer feature is optional. If it is not present, then a Pin 1 identifier must be located in the index area indicated. The Pin 1 identifier can be: a molded mark/identifier; an embedded metal marker; or a printed indicator.*

Symbol		A	A1	A2	b	D	E	E1	e	h	L	L1	L2	θ	θ1
Dimension (mm)	MIN	1.35*	0.10	1.25	0.31	9.80*	5.80*	3.80*	1.27 BSC	0.25	0.40	1.04 REF	0.25 BSC	0°	5°
	NOM	-	-	-	-	9.90	6.00	3.90		-	-			-	-
	MAX	1.75	0.25	1.65*	0.51	10.00*	6.20*	4.00*		0.50	1.27			8°	15°

JEDEC Registration MS-012, Variation AC, Issue E, Sept. 2005.
** This dimension is not specified in the JEDEC drawing.*
Drawings are not to scale.
***Supertex Doc. #:** DSPD-16SONG, Version G041309.*

(The package drawing(s) in this data sheet may not reflect the most current specifications. For the latest package outline information go to http://www.supertex.com/packaging.html.)

Supertex inc. does not recommend the use of its products in life support applications, and will not knowingly sell them for use in such applications unless it receives an adequate "product liability indemnification insurance agreement." **Supertex inc.** does not assume responsibility for use of devices described, and limits its liability to the replacement of the devices determined defective due to workmanship. No responsibility is assumed for possible omissions and inaccuracies. Circuitry and specifications are subject to change without notice. For the latest product specifications refer to the **Supertex inc.** (website: http//www.supertex.com)

©2012 **Supertex inc.** All rights reserved. Unauthorized use or reproduction is prohibited.

Supertex inc.
1235 Bordeaux Drive, Sunnyvale, CA 94089
Tel: 408-222-8888
www.supertex.com