chanhvinh.com

EQCO125X40 Family

EQCO125X40, EQCO125T40
EQCO62X20, EQCO31X20

12.5 Gbps Asymmetric Equalizer/Driver/Repeater Product Brief

Features

- Equalizer for up to 40m of coaxial cable at 12.5 Gbps or up to 130m at 1.25 Gbps using Belden 1694A cable
- Same chip used at Device (Camera) and Host (Frame Grabber) for asymmetric full-duplex communication
- Lower Cost version EQCO125T40 for Device (Camera) side only
- Cable types supported are 75Ω coax, 50Ω coax, and 100Ω STP (Shielded Twisted Pair)
- Simultaneous signaling over a single cable:
  - Up to 12.5 Gbps downlink
  - 21 or 42 Mbps uplink
  - Power over Coax
- Can also be used as a stand-alone cable repeater with simultaneous power, downlink and uplink over a single cable
- Integrated termination resistors for differential signaling
- CDR (Clock-Data Recovery) restores signal integrity in both directions
- Both Uplink and Downlink include equalizer, CDR and Cable driver (see Figure 1-2)
- Reference-clock free operation (no crystal or clock needed)
- Low power consumption / single supply @ 1.25V
- 16-pin, 0.65 mm pin pitch, 4 mm QFN package
- Small PCB footprint for EQCO125X40 Family with few off-chip components
- Industrial temperature range
- Pb-free and RoHS compliant

Applications

- CoaXPress compliant systems, supports all CoaXPress standards and speeds
- Links for high-definition Cameras
- Links between FPGAs
- High-speed capture cards over long cable lengths
- Machine Vision, Military, Aerospace, Medical, Broadcast and Surveillance cameras, Intelligent Traffic Systems
- When a single cable carrying power, video data and camera control stream is needed

General Description

The EQCO125X40 is a single chip (equalizer, driver, reclocker) that repeats high-speed 8b/10b coded data signals with a downstream bit-rate between 1.25 to 12.5 Gbps. From a cable or PCB trace pair, the signal is received by an auto-adaptive equalizer that compensates for higher-frequency losses in the preceding channel. A reference-less Clock-Data Recovery (CDR) subsequently self-adapts to the incoming bit-rate and resets the jitter back to a low value for maintaining signal integrity. A cable driver launches this clean signal back onto a cable or PCB trace pair. When placed in series as a repeater, a signal can travel through several EQCO125X40 Family devices to the destination. The EQCO125X40 CDR restores signal integrity at each link along the way.

The high-speed direction (or downlink) has a simultaneous complementary uplink, operating at 20.833 Mbps or 41.666 Mbps 8b/10b coded signaling. This uplink also includes an equalizer, a reference-less CDR and a cable driver, operating with a transparent full-duplex and self-adaptive downlink.

The EQCO125X40 Family can be used as a CoaXPress transmitter inside a camera, as a CoaXPress receiver inside a frame grabber and as a CoaXPress repeater inside an active coax cable or link. It can also be used as a generic high-speed signaling transport for any 8b/10b application. In general it can be regarded as an ideal means for using the high bit-rate ports on an FPGA in real-world applications. This allows the high-speed signal to get an increase in signal integrity along its signaling path at strategic places: e.g. when changing the signaling nature from single-ended to differential or vice-versa, after long runs of cable, or recovering the signal from skin effect and/or dielectric losses. The CDR resets accumulated jitter due to small impedance mismatches, non-ideal connectors, PCB-vias, etc., and yields better signal integrity. This is also useful when the signal chain includes an optical link.

TYPICAL LINK PERFORMANCE

	Typical maximum cable length for Belden (m)			
Bit-rate (Gbps)	**1694A**	**4694R**	**4855R**	**4731R**
1.25	130	137	75	210
2.5	110	118	64	180
3.125	100	108	60	160
5	65	70	40	105
6.25	55	60	33	90
10	40	45	24	65
12.5	40	45	24	65

© 2017-2023 Microchip Technology Inc. and its subsidiaries

MARCH 2023

chanhvinh.com

TO OUR VALUED CUSTOMERS

It is our intention to provide our valued customers with the best documentation possible to ensure successful use of your Microchip products. To this end, we will continue to improve our publications to better suit your needs. Our publications will be refined and enhanced as new volumes and updates are introduced.

If you have any questions or comments regarding this publication, please contact the Marketing Communications Department via E-mail at **docerrors@microchip.com**. We welcome your feedback.

Most Current Data Sheet

To obtain the most up-to-date version of this data sheet, please register at our Worldwide Web site at:

http://www.microchip.com

You can determine the version of a data sheet by examining its literature number found on the bottom outside corner of any page. The last character of the literature number is the version number, (e.g., DS30000000A is version A of document DS30000000).

Errata

An errata sheet, describing minor operational differences from the data sheet and recommended workarounds, may exist for current devices. As device/documentation issues become known to us, we will publish an errata sheet. The errata will specify the revision of silicon and revision of document to which it applies.

To determine if an errata sheet exists for a particular device, please check with one of the following:

- Microchip's Worldwide Web site; **http://www.microchip.com**
- Your local Microchip sales office (see last page)

When contacting a sales office, please specify which device, revision of silicon and data sheet (include literature number) you are using.

Customer Notification System

Register on our web site at **www.microchip.com** to receive the most current information on all of our products.

© 2017-2023 Microchip Technology Inc. and its subsidiaries

chanhvinh.com

1.0 BASIC APPLICATION INFORMATION

The EQCO125X40 Family repeater chip is designed to simultaneously transmit and receive signals on a single cable or PCB trace pair. In one direction an 8b/10b coded downlink signal is transmitted between 1.25 Gbps and 12.5 Gbps. In the opposite direction a lower speed 8b/10b coded uplink signal is transmitted at 20.833 Mbps or 41.666 Mbps. The EQCO125X40 has an integrated high-speed equalizer, reclocker and cable driver. The uplink channel also has an integrated receiver, reclocker and driver. Figure 1-1 illustrates a typical EQCO125X40 link set-up.

The downlink signal is transmitted with 600 mV transmit amplitude. As this signal is attenuated by the coax (or STP) over distance, it is recovered by the equalizer and reclocker. The low-speed uplink is transmitted with a lower amplitude of 130 mV to limit the crosstalk with the downlink channel.

The downlink channel is intended for NRZ 8b/10b data with bit-rates between 1.25 Gbps and 12.5 Gbps. CoaXPress standard speeds of CXP-1 (1.25 Gbps), CXP-2 (2.5 Gbps), CXP-3 (3.125 Gbps), CXP-5 (5 Gbps), CXP-6 (6.25 Gbps), CXP-10 (10 Gbps) and CXP-12 (12.5 Gbps) are all supported as well as all generic 8b/10b applications.

The low-speed uplink is intended for NRZ 8b/10b data with bit-rates between 20 Mbps and 42 Mbps with a single-ended 1.25V LVTTL input and output. CoaXPress standard speeds of 20.833 Mbps and 41.666 Mbps are supported.

On top of the downlink channel and the low-speed uplink, the system allows power transmission over the coax by using external inductors**.** These external inductors give the communication channel a high-pass characteristic. The uplink receiver inside the EQCO125X40 chip recovers the signal lost by this high-pass filter. Appropriate inductors should be selected for correct operation of the link. Operation has only been tested with the inductor combination used in Microchip's reference design, even though other components might be suitable.

FIGURE 1-1: TYPICAL EQCO125X40 FAMILY LINK SET-UP

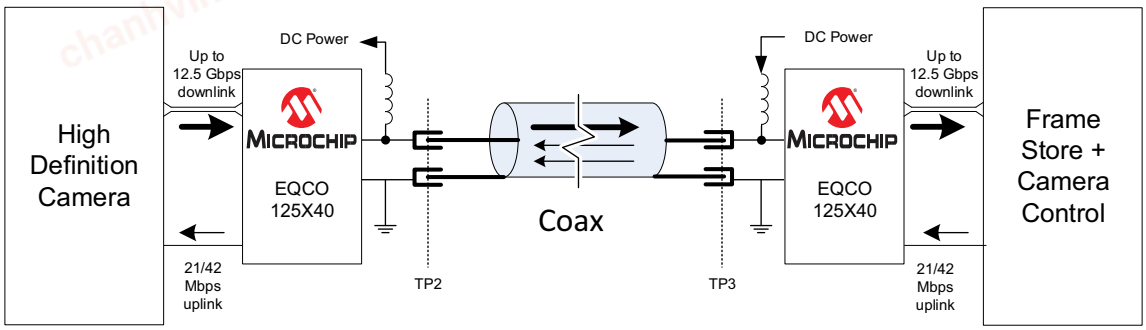

FIGURE 1-2: EQCO125X40 FAMILY BLOCK DIAGRAM SHOWING ELECTRICAL CONNECTIONS

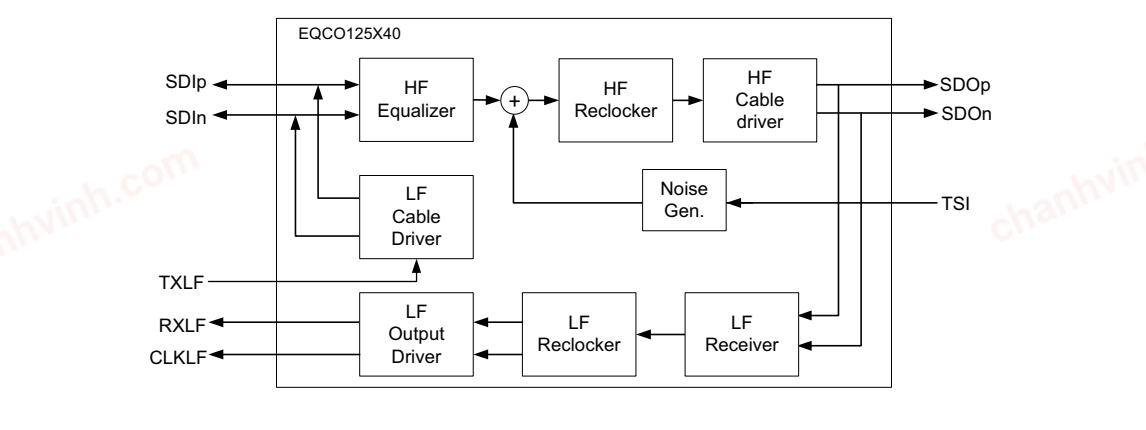

chanhvinh.com

EQCO125X40 Family

TABLE 1-1: EQCO125X40 FAMILY OF PRODUCTS

Part Number	HF Speed	LF Speed	Device Support	Host Support
EQCO125X40	All CoaXPress speeds up to 12.5 Gbps	20.833 Mbps and 41.666 Mbps	X	X
EQCO125T40	All CoaXPress speeds up to 12.5 Gbps	20.833 Mbps and 41.666 Mbps	X	
EQCO62X20	All CoaXPress speeds up to 6.25 Gbps	20.833 Mbps	X	X
EQCO31X20	All CoaXPress speeds up to 3.125 Gbps	20.833 Mbps	X	X

Note: See full ordering information options on the Product Identification System page.

© 2017-2023 Microchip Technology Inc. and its subsidiaries

chanhvinh.com

PACKAGING INFORMATION

16-Lead Plastic Quad Flat, No Lead Package (3DW) - 4x4x1 mm Body [QFN] Exposed Pad 2.05x2.05 mm

Note: For the most current package drawings, please see the Microchip Packaging Specification located at http://www.microchip.com/packaging

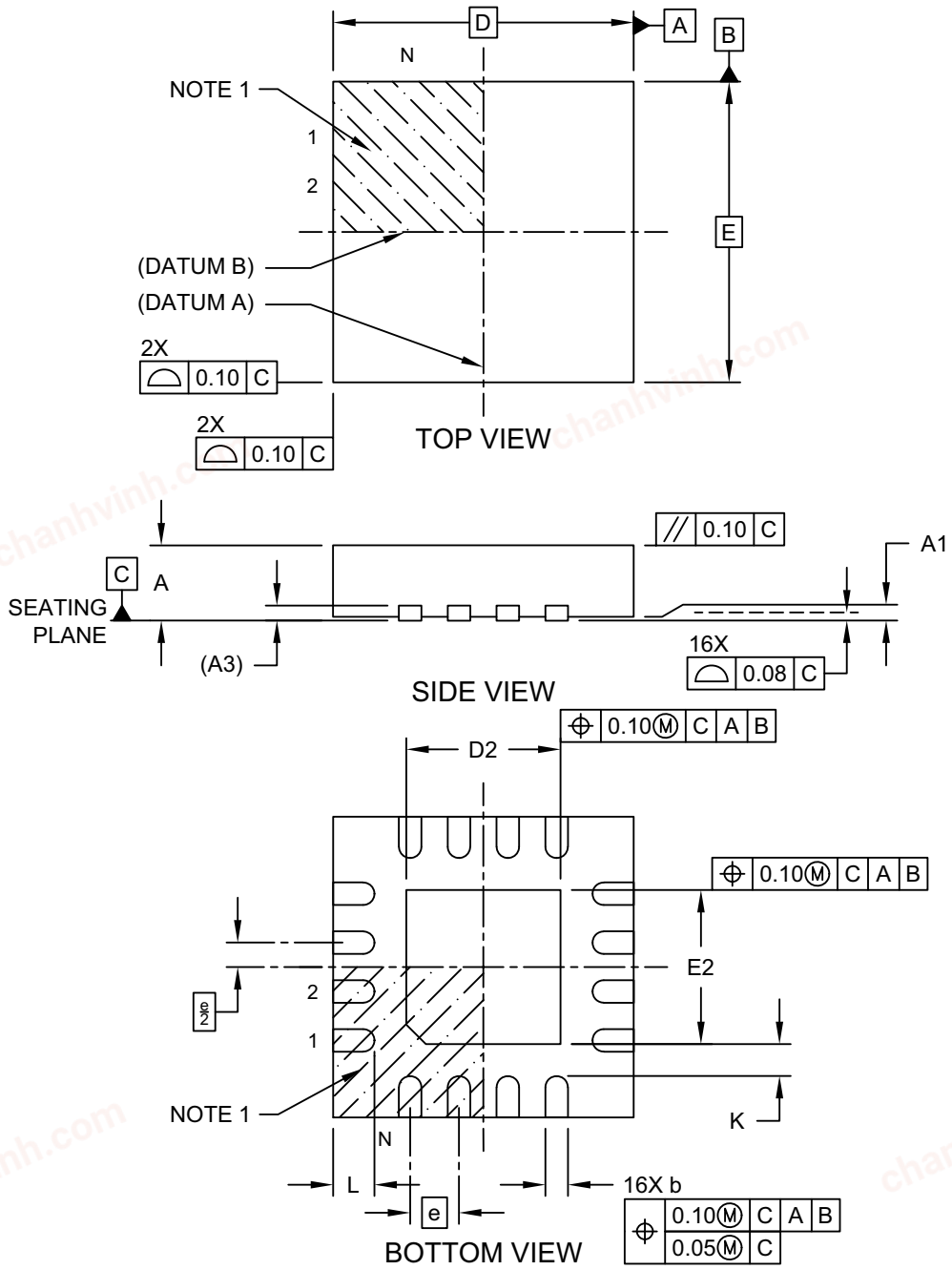

Microchip Technology Drawing C04-582 Rev A Sheet 1 of 2

© 2023 Microchip Technology Inc.

chanhvinh.com

16-Lead Plastic Quad Flat, No Lead Package (3DW) - 4x4x1 mm Body [QFN]
Exposed Pad 2.05x2.05 mm

Note: For the most current package drawings, please see the Microchip Packaging Specification located at http://www.microchip.com/packaging

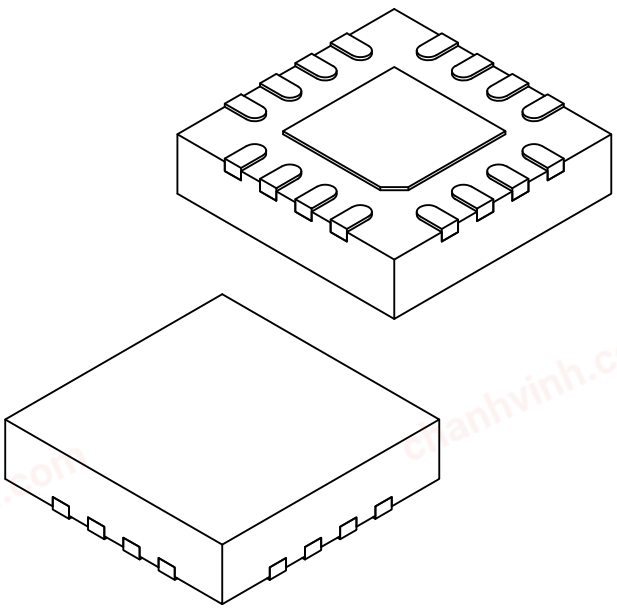

Units		MILLIMETERS		
Dimension Limits		MIN	NOM	MAX
Number of Terminals	N		16	
Pitch	e		0.65 BSC	
Overall Height	A	0.80	0.90	1.00
Standoff	A1	0.00	0.02	0.05
Terminal Thickness	A3		0.20 REF	
Overall Length	D		4.00 BSC	
Exposed Pad Length	D2	1.95	2.05	2.15
Overall Width	E		4.00 BSC	
Exposed Pad Width	E2	1.95	2.05	2.15
Terminal Width	b	0.25	0.30	0.35
Terminal Length	L	0.45	0.55	0.65
Terminal-to-Exposed-Pad	K		0.425 REF	

Notes:

1. Pin 1 visual index feature may vary, but must be located within the hatched area.
2. Package is saw singulated
3. Dimensioning and tolerancing per ASME Y14.5M
   BSC: Basic Dimension. Theoretically exact value shown without tolerances.
   REF: Reference Dimension, usually without tolerance, for information purposes only.

Microchip Technology Drawing C04-582 Rev A Sheet 2 of 2

© 2023 Microchip Technology Inc.

© 2017-2023 Microchip Technology Inc. and its subsidiaries

chanhvinh.com

Note the following details of the code protection feature on Microchip products:

- Microchip products meet the specifications contained in their particular Microchip Data Sheet.
- Microchip believes that its family of products is secure when used in the intended manner, within operating specifications, and under normal conditions.
- Microchip values and aggressively protects its intellectual property rights. Attempts to breach the code protection features of Microchip product is strictly prohibited and may violate the Digital Millennium Copyright Act.
- Neither Microchip nor any other semiconductor manufacturer can guarantee the security of its code. Code protection does not mean that we are guaranteeing the product is "unbreakable" Code protection is constantly evolving. Microchip is committed to continuously improving the code protection features of our products.

This publication and the information herein may be used only with Microchip products, including to design, test, and integrate Microchip products with your application. Use of this information in any other manner violates these terms. Information regarding device applications is provided only for your convenience and may be superseded by updates. It is your responsibility to ensure that your application meets with your specifications. Contact your local Microchip sales office for additional support or, obtain additional support at https://www.microchip.com/en-us/support/design-help/client-support-services.

THIS INFORMATION IS PROVIDED BY MICROCHIP "AS IS". MICROCHIP MAKES NO REPRESENTATIONS OR WARRANTIES OF ANY KIND WHETHER EXPRESS OR IMPLIED, WRITTEN OR ORAL, STATUTORY OR OTHERWISE, RELATED TO THE INFORMATION INCLUDING BUT NOT LIMITED TO ANY IMPLIED WARRANTIES OF NON-INFRINGEMENT, MERCHANTABILITY, AND FITNESS FOR A PARTICULAR PURPOSE, OR WARRANTIES RELATED TO ITS CONDITION, QUALITY, OR PERFORMANCE.

IN NO EVENT WILL MICROCHIP BE LIABLE FOR ANY INDIRECT, SPECIAL, PUNITIVE, INCIDENTAL, OR CONSEQUENTIAL LOSS, DAMAGE, COST, OR EXPENSE OF ANY KIND WHATSOEVER RELATED TO THE INFORMATION OR ITS USE, HOWEVER CAUSED, EVEN IF MICROCHIP HAS BEEN ADVISED OF THE POSSIBILITY OR THE DAMAGES ARE FORESEEABLE. TO THE FULLEST EXTENT ALLOWED BY LAW, MICROCHIP'S TOTAL LIABILITY ON ALL CLAIMS IN ANY WAY RELATED TO THE INFORMATION OR ITS USE WILL NOT EXCEED THE AMOUNT OF FEES, IF ANY, THAT YOU HAVE PAID DIRECTLY TO MICROCHIP FOR THE INFORMATION.

Use of Microchip devices in life support and/or safety applications is entirely at the buyer's risk, and the buyer agrees to defend, indemnify and hold harmless Microchip from any and all damages, claims, suits, or expenses resulting from such use. No licenses are conveyed, implicitly or otherwise, under any Microchip intellectual property rights unless otherwise stated.

For information regarding Microchip's Quality Management Systems, please visit www.microchip.com/quality.

Trademarks

The Microchip name and logo, the Microchip logo, Adaptec, AVR, AVR logo, AVR Freaks, BesTime, BitCloud, CryptoMemory, CryptoRF, dsPIC, flexPWR, HELDO, IGLOO, JukeBlox, KeeLoq, Kleer, LANCheck, LinkMD, maXStylus, maXTouch, MediaLB, megaAVR, Microsemi, Microsemi logo, MOST, MOST logo, MPLAB, OptoLyzer, PIC, picoPower, PICSTART, PIC32 logo, PolarFire, Prochip Designer, QTouch, SAM-BA, SenGenuity, SpyNIC, SST, SST Logo, SuperFlash, Symmetricom, SyncServer, Tachyon, TimeSource, tinyAVR, UNI/O, Vectron, and XMEGA are registered trademarks of Microchip Technology Incorporated in the U.S.A. and other countries.

AgileSwitch, APT, ClockWorks, The Embedded Control Solutions Company, EtherSynch, Flashtec, Hyper Speed Control, HyperLight Load, Libero, motorBench, mTouch, Powermite 3, Precision Edge, ProASIC, ProASIC Plus, ProASIC Plus logo, Quiet-Wire, SmartFusion, SyncWorld, Temux, TimeCesium, TimeHub, TimePictra, TimeProvider, TrueTime, and ZL are registered trademarks of Microchip Technology Incorporated in the U.S.A.

Adjacent Key Suppression, AKS, Analog-for-the-Digital Age, Any Capacitor, AnyIn, AnyOut, Augmented Switching, BlueSky, BodyCom, Clockstudio, CodeGuard, CryptoAuthentication, CryptoAutomotive, CryptoCompanion, CryptoController, dsPICDEM, dsPICDEM.net, Dynamic Average Matching, DAM, ECAN, Espresso T1S, EtherGREEN, GridTime, IdealBridge, In-Circuit Serial Programming, ICSP, INICnet, Intelligent Paralleling, IntelliMOS, Inter-Chip Connectivity, JitterBlocker, Knob-on-Display, KoD, maxCrypto, maxView, memBrain, Mindi, MiWi, MPASM, MPF, MPLAB Certified logo, MPLIB, MPLINK, MultiTRAK, NetDetach, Omniscient Code Generation, PICDEM, PICDEM.net, PICkit, PICtail, PowerSmart, PureSilicon, QMatrix, REAL ICE, Ripple Blocker, RTAX, RTG4, SAM-ICE, Serial Quad I/O, simpleMAP, SimpliPHY, SmartBuffer, SmartHLS, SMART-I.S., storClad, SQI, SuperSwitcher, SuperSwitcher II, Switchtec, SynchroPHY, Total Endurance, Trusted Time, TSHARC, USBCheck, VariSense, VectorBlox, VeriPHY, ViewSpan, WiperLock, XpressConnect, and ZENA are trademarks of Microchip Technology Incorporated in the U.S.A. and other countries.

SQTP is a service mark of Microchip Technology Incorporated in the U.S.A.

The Adaptec logo, Frequency on Demand, Silicon Storage Technology, and Symmcom are registered trademarks of Microchip Technology Inc. in other countries.

GestIC is a registered trademark of Microchip Technology Germany II GmbH & Co. KG, a subsidiary of Microchip Technology Inc., in other countries.

All other trademarks mentioned herein are property of their respective companies.

© 2017-2023, Microchip Technology Incorporated and its subsidiaries.

All Rights Reserved.

ISBN: 978-1-6683-1996-3

chanhvinh.com

Worldwide Sales and Service

AMERICAS

Corporate Office
2355 West Chandler Blvd.
Chandler, AZ 85224-6199
Tel: 480-792-7200
Fax: 480-792-7277
Technical Support:
http://www.microchip.com/support
Web Address:
www.microchip.com

Atlanta
Duluth, GA
Tel: 678-957-9614
Fax: 678-957-1455

Austin, TX
Tel: 512-257-3370

Boston
Westborough, MA
Tel: 774-760-0087
Fax: 774-760-0088

Chicago
Itasca, IL
Tel: 630-285-0071
Fax: 630-285-0075

Dallas
Addison, TX
Tel: 972-818-7423
Fax: 972-818-2924

Detroit
Novi, MI
Tel: 248-848-4000

Houston, TX
Tel: 281-894-5983

Indianapolis
Noblesville, IN
Tel: 317-773-8323
Fax: 317-773-5453
Tel: 317-536-2380

Los Angeles
Mission Viejo, CA
Tel: 949-462-9523
Fax: 949-462-9608
Tel: 951-273-7800

Raleigh, NC
Tel: 919-844-7510

New York, NY
Tel: 631-435-6000

San Jose, CA
Tel: 408-735-9110
Tel: 408-436-4270

Canada - Toronto
Tel: 905-695-1980
Fax: 905-695-2078

ASIA/PACIFIC

Australia - Sydney
Tel: 61-2-9868-6733

China - Beijing
Tel: 86-10-8569-7000

China - Chengdu
Tel: 86-28-8665-5511

China - Chongqing
Tel: 86-23-8980-9588

China - Dongguan
Tel: 86-769-8702-9880

China - Guangzhou
Tel: 86-20-8755-8029

China - Hangzhou
Tel: 86-571-8792-8115

China - Hong Kong SAR
Tel: 852-2943-5100

China - Nanjing
Tel: 86-25-8473-2460

China - Qingdao
Tel: 86-532-8502-7355

China - Shanghai
Tel: 86-21-3326-8000

China - Shenyang
Tel: 86-24-2334-2829

China - Shenzhen
Tel: 86-755-8864-2200

China - Suzhou
Tel: 86-186-6233-1526

China - Wuhan
Tel: 86-27-5980-5300

China - Xian
Tel: 86-29-8833-7252

China - Xiamen
Tel: 86-592-2388138

China - Zhuhai
Tel: 86-756-3210040

ASIA/PACIFIC

India - Bangalore
Tel: 91-80-3090-4444

India - New Delhi
Tel: 91-11-4160-8631

India - Pune
Tel: 91-20-4121-0141

Japan - Osaka
Tel: 81-6-6152-7160

Japan - Tokyo
Tel: 81-3-6880- 3770

Korea - Daegu
Tel: 82-53-744-4301

Korea - Seoul
Tel: 82-2-554-7200

Malaysia - Kuala Lumpur
Tel: 60-3-7651-7906

Malaysia - Penang
Tel: 60-4-227-8870

Philippines - Manila
Tel: 63-2-634-9065

Singapore
Tel: 65-6334-8870

Taiwan - Hsin Chu
Tel: 886-3-577-8366

Taiwan - Kaohsiung
Tel: 886-7-213-7830

Taiwan - Taipei
Tel: 886-2-2508-8600

Thailand - Bangkok
Tel: 66-2-694-1351

Vietnam - Ho Chi Minh
Tel: 84-28-5448-2100

EUROPE

Austria - Wels
Tel: 43-7242-2244-39
Fax: 43-7242-2244-393

Denmark - Copenhagen
Tel: 45-4485-5910
Fax: 45-4485-2829

Finland - Espoo
Tel: 358-9-4520-820

France - Paris
Tel: 33-1-69-53-63-20
Fax: 33-1-69-30-90-79

Germany - Garching
Tel: 49-8931-9700

Germany - Haan
Tel: 49-2129-3766400

Germany - Heilbronn
Tel: 49-7131-72400

Germany - Karlsruhe
Tel: 49-721-625370

Germany - Munich
Tel: 49-89-627-144-0
Fax: 49-89-627-144-44

Germany - Rosenheim
Tel: 49-8031-354-560

Israel - Ra'anana
Tel: 972-9-744-7705

Italy - Milan
Tel: 39-0331-742611
Fax: 39-0331-466781

Italy - Padova
Tel: 39-049-7625286

Netherlands - Drunen
Tel: 31-416-690399
Fax: 31-416-690340

Norway - Trondheim
Tel: 47-7288-4388

Poland - Warsaw
Tel: 48-22-3325737

Romania - Bucharest
Tel: 40-21-407-87-50

Spain - Madrid
Tel: 34-91-708-08-90
Fax: 34-91-708-08-91

Sweden - Gothenberg
Tel: 46-31-704-60-40

Sweden - Stockholm
Tel: 46-8-5090-4654

UK - Wokingham
Tel: 44-118-921-5800
Fax: 44-118-921-5820

© 2017-2023 Microchip Technology Inc. and its subsidiaries