chanhvinh.com

DN2470

N-Channel, Depletion-Mode, Vertical DMOS FET

Features

- High-input impedance
- Low-input capacitance
- Fast switching speeds
- Low on-resistance
- Free from secondary breakdown
- Low input and output leakage

Applications

- Normally-on switches
- Solid state relays
- Converters
- Linear amplifiers
- Constant current sources
- Battery operated systems
- Telecom

Description

This low threshold, depletion-mode, normally-on, transistor utilizes an advanced vertical Diffusion Metal Oxide Semiconductor (DMOS) structure and a well proven silicon-gate manufacturing process. This combination produces a device with the power-handling capabilities of bipolar transistors, plus the high-input impedance and positive-temperature coefficient inherent in Metal-Oxide Semiconductor (MOS) devices. Characteristic of all MOS structures, this device is free from thermal runaway and thermally-induced secondary breakdown.

Vertical DMOS Field-Effect Transistors (FETs) are ideally suited to a wide range of switching and amplifying applications where a very low threshold voltage, high breakdown voltage, high input impedance, low input capacitance, and fast switching speeds are desired.

© 2015 Microchip Technology Inc.

chanhvinh.com

DN2470

Package Type

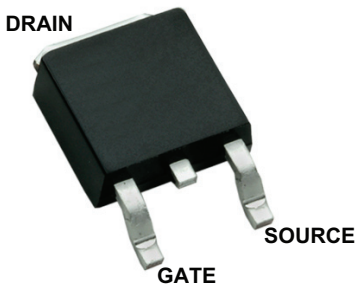

TO-252 (D-PAK)

See Table 2-1 for pin information

© 2015 Microchip Technology Inc.

chanhvinh.com

1.0 ELECTRICAL CHARACTERISTICS

ABSOLUTE MAXIMUM RATINGS†

Drain-to-source voltage ..... BV_{DSX}
Drain-to-gate voltage ..... BV_{DGX}
Gate-to-source voltage ..... ±20V
Operating and storage temperature ..... -55°C to +150°C

† Notice: Stresses above those listed under "Maximum Ratings" may cause permanent damage to the device. This is a stress rating only and functional operation of the device at those or any other conditions above those indicated in the operational listings of this specification is not implied. Exposure to maximum rating conditions for extended periods may affect device reliability.

DC AND AC CHARACTERISTICS

Electrical Specifications: Unless otherwise specified, for all specifications $T_A = T_J$ = +25°C

Parameter	Symbol	Min	Typ	Max	Units	Conditions
DC Parameters (Note 1, unless otherwise stated)						
Drain-to-source breakdown voltage	BV_{DSX}	700	–	–	V	V_{GS} = -5.0V, I_D= 100µA
Gate-to-source off voltage	$V_{GS(OFF)}$	-1.5	–	-3.5	V	V_{DS} = 25V, I_D= 10µA
Change in $V_{GS(OFF)}$ with temperature	$\Delta V_{GS(OFF)}$	–	–	-4.5	mV/°C	V_{DS} = 25V, I_D= 10µA ((Note 2)
Gate body leakage current	I_{GSS}	–	–	100	nA	V_{GS} = ±20V, V_{DS}= 0V
Drain-to-source leakage current	$I_{D(OFF)}$	–	–	1.0	µA	V_{DS} = BV_{DSX}, V_{GS} = -10V
		–	–	1.0	mA	V_{DS} = 0.8 BV_{DSX}, V_{GS} = -10V, T_A= 125°C ((Note 2)
Saturated drain-to-source current	I_{DSS}	–	500	-	mA	V_{GS} = 0V, V_{DS}= 25V
Static drain-to-source on-state resistance	$R_{DS(ON)}$	–	–	42	Ω	V_{GS} = 0V, I_D= 100mA
Change in $R_{DS(ON)}$ with temperature	$\Delta R_{DS(ON)}$	–	–	1.1	%/°C	V_{GS}= 0V, I_D= 100mA (Note 2)
AC Parameters (Note 2)						
Forward transconductance	G_{FS}	100	–	–	mmho	V_{DS}= 10V, I_D= 100mA
Input capacitance	C_{ISS}	–	–	540	pF	V_{GS}= -10V, V_{DS}= 25V, f = 1.0 MHz
Common source output capacitance	C_{OSS}	–	–	60		
Reverse transfer capacitance	C_{RSS}	–	–	25		
Turn-on delay time	$t_{d(ON)}$	–	–	30	ns	V_{DD}= 25V, I_D= 100mA, R_{GEN}= 25Ω,
Rise time	t_r	–	–	45		
Turn-off delay time	$t_{d(OFF)}$	–	–	45		
Fall time	t_f	–	–	60		
Diode Parameters						
Diode forward voltage drop	V_{SD}	–	–	1.8	V	V_{GS}= -5.0V, I_{SD}= 200mA (Note 1)
Reverse recovery time	t_{rr}	–	800	–	ns	V_{GS}= -5.0V, I_{SD}= 200mA (Note 2)

Note 1: All DC parameters are 100% tested at 25°C unless otherwise stated. Pulse test: 300 µs pulse, 2% duty cycle.

2: Specification is obtained by characterization and is not 100% tested.

© 2015 Microchip Technology Inc.

chanhvinh.com

TEMPERATURE SPECIFICATIONS

Electrical Specifications: Unless otherwise specified, for all specifications $T_A = T_J$ = +25°C						
Parameter	**Symbol**	**Min**	**Typ**	**Max**	**Units**	**Conditions**
Temperature Ranges						
Operating and Storage temperature		-55	–	150	°C	
Package Thermal Resistances						
Thermal Resistance, TO-252 (D-PAK)	θ_{ja}	–	132	–	°C/W	

TABLE 1-1: THERMAL CHARACTERISTICS

Package	**I_D[1] continuous (mA)**	**I_D pulsed (mA)**	**Power Dissipation @T_A = 25°C (W)**	**I_{DR}[1] (mA)**	**I_{DRM} (mA)**
TO-252 (D-PAK)	170	500	2.5[2]	170	500

1. I_D continuous is limited by max rated T_j
2. Mounted on FR4 board, 25mm x 25mm x 1.57 mm

2.0 PIN DESCRIPTION

The locations of the pins are listed in Package Type.

TABLE 2-1: PIN DESCRIPTION

Pin # TO-252	**Function**
1	GATE
3	SOURCE
2,4	DRAIN

© 2015 Microchip Technology Inc.

chanhvinh.com

3.0 APPLICATION INFORMATION

Figure 3-1 shows the switching waveform and test circuit for DN2450.

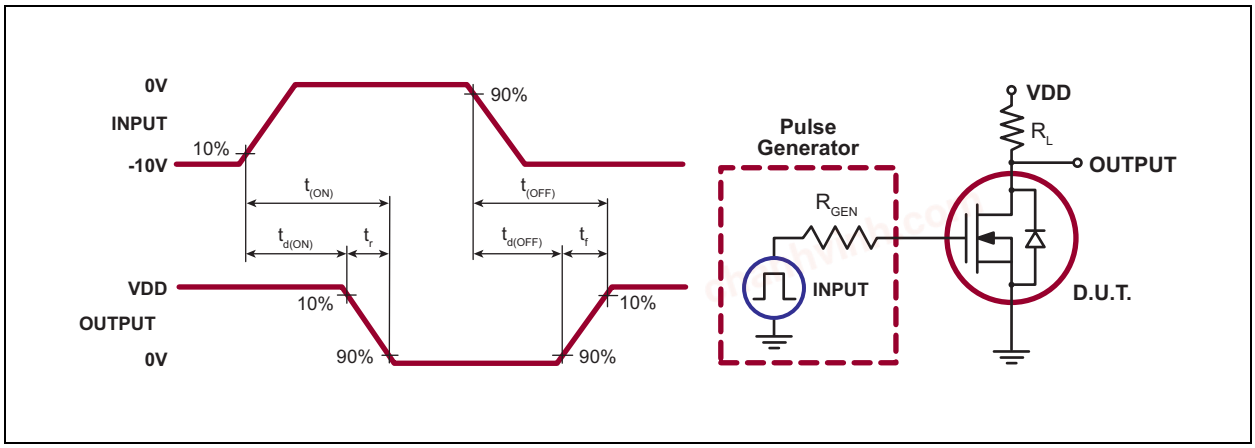

FIGURE 3-1: *Switching Waveforms and Test Circuit*

Product Summary

BV_{DSX}/BV_{DGX} (V)	$R_{DS(ON)}$ (max) (Ω)	I_{DSS} (typ) (mA)
700	42	500

chanhvinh.com

4.0 PACKAGING INFORMATION

4.1 Package Marking Information

TO-252 (D-PAK) Example

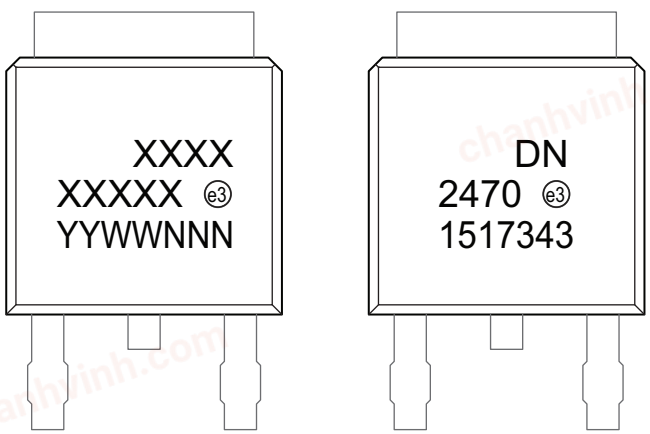

Legend:	XX...X	Product Code or Customer-specific information
	Y	Year code (last digit of calendar year)
	YY	Year code (last 2 digits of calendar year)
	WW	Week code (week of January 1 is week '01')
	NNN	Alphanumeric traceability code
	(e3)	Pb-free JEDEC® designator for Matte Tin (Sn)
	*	This package is Pb-free. The Pb-free JEDEC designator ((e3)) can be found on the outer packaging for this package.

Note: In the event the full Microchip part number cannot be marked on one line, it will be carried over to the next line, thus limiting the number of available characters for product code or customer-specific information. Package may or not include the corporate logo.

© 2015 Microchip Technology Inc.

chanhvinh.com

3-Lead TO-252 (D-PAK) Package Outline (K4)

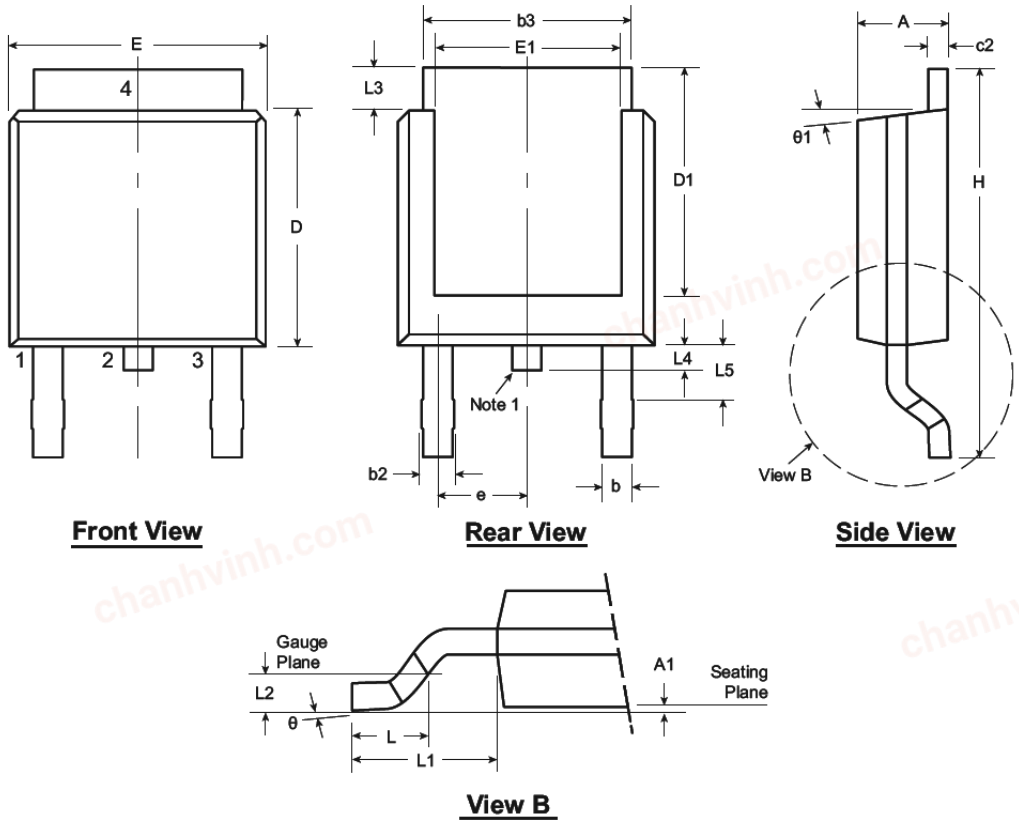

Note: For the most current package drawings, see the Microchip Packaging Specification at www.microchip.com/packaging.

Note:

1. Although 4 terminal locations are shown, only 3 are functional. Lead number 2 was removed.

Symbol		A	A1	b	b2	b3	c2	D	D1	E	E1	e	H	L	L1	L2	L3	L4	L5	θ	θ1
Dimension (inches)	MIN	.086	.000*	.025	.030	.195	.018	.235	.205	.250	.170	.090 BSC	.370	.055	.108 REF	.020 BSC	.035	.025*	.035†	0°	0°
	NOM	-	-	-	-	-	-	.240	-	-	-		-	.060			-	-	-	-	-
	MAX	.094	.005	.035	.045	.215	.035	.245	.217*	.265	.200*		.410	.070			.050	.040	.060	10°	15°

JEDEC Registration TO-252, Variation AA, Issue E, June 2004.
** This dimension is not specified in the JEDEC drawing.*
† This dimension differs from the JEDEC drawing.
Drawings not to scale.

chanhvinh.com

APPENDIX A: REVISION HISTORY

Revision A (October 2015)

- Updated file to new format. Released data sheet in the Microchip system.

chanhvinh.com

© 2015 Microchip Technology Inc.

chanhvinh.com

PRODUCT IDENTIFICATION SYSTEM

To order or obtain information, e.g., on pricing or delivery, refer to the factory or the listed sales office.

PART NO.	XX	-	X	-	X
Device	Package Options		Environmental		Media Type

Device:	DN2470	=	N-Channel, Depletion-Mode, vertical DMOS FET
Package:	K4	=	TO-252 (D-PAK)
Environmental	G	=	Lead (Pb)-free/ROHS-compliant package
Media Type:	(blank)	=	2000/Reel

Examples:

a) DN2470K4-G — TO-252 package, 2000/reel

chanhvinh.com

Note the following details of the code protection feature on Microchip devices:

- Microchip products meet the specification contained in their particular Microchip Data Sheet.
- Microchip believes that its family of products is one of the most secure families of its kind on the market today, when used in the intended manner and under normal conditions.
- There are dishonest and possibly illegal methods used to breach the code protection feature. All of these methods, to our knowledge, require using the Microchip products in a manner outside the operating specifications contained in Microchip's Data Sheets. Most likely, the person doing so is engaged in theft of intellectual property.
- Microchip is willing to work with the customer who is concerned about the integrity of their code.
- Neither Microchip nor any other semiconductor manufacturer can guarantee the security of their code. Code protection does not mean that we are guaranteeing the product as "unbreakable."

Code protection is constantly evolving. We at Microchip are committed to continuously improving the code protection features of our products. Attempts to break Microchip's code protection feature may be a violation of the Digital Millennium Copyright Act. If such acts allow unauthorized access to your software or other copyrighted work, you may have a right to sue for relief under that Act.

Information contained in this publication regarding device applications and the like is provided only for your convenience and may be superseded by updates. It is your responsibility to ensure that your application meets with your specifications. MICROCHIP MAKES NO REPRESENTATIONS OR WARRANTIES OF ANY KIND WHETHER EXPRESS OR IMPLIED, WRITTEN OR ORAL, STATUTORY OR OTHERWISE, RELATED TO THE INFORMATION, INCLUDING BUT NOT LIMITED TO ITS CONDITION, QUALITY, PERFORMANCE, MERCHANTABILITY OR FITNESS FOR PURPOSE**.** Microchip disclaims all liability arising from this information and its use. Use of Microchip devices in life support and/or safety applications is entirely at the buyer's risk, and the buyer agrees to defend, indemnify and hold harmless Microchip from any and all damages, claims, suits, or expenses resulting from such use. No licenses are conveyed, implicitly or otherwise, under any Microchip intellectual property rights unless otherwise stated.

Trademarks

The Microchip name and logo, the Microchip logo, dsPIC, FlashFlex, flexPWR, JukeBlox, KEELOQ, KEELOQ logo, Kleer, LANCheck, MediaLB, MOST, MOST logo, MPLAB, OptoLyzer, PIC, PICSTART, PIC^{32} logo, RightTouch, SpyNIC, SST, SST Logo, SuperFlash and UNI/O are registered trademarks of Microchip Technology Incorporated in the U.S.A. and other countries.

The Embedded Control Solutions Company and mTouch are registered trademarks of Microchip Technology Incorporated in the U.S.A.

Analog-for-the-Digital Age, BodyCom, chipKIT, chipKIT logo, CodeGuard, dsPICDEM, dsPICDEM.net, ECAN, In-Circuit Serial Programming, ICSP, Inter-Chip Connectivity, KleerNet, KleerNet logo, MiWi, motorBench, MPASM, MPF, MPLAB Certified logo, MPLIB, MPLINK, MultiTRAK, NetDetach, Omniscient Code Generation, PICDEM, PICDEM.net, PICkit, PICtail, RightTouch logo, REAL ICE, SQI, Serial Quad I/O, Total Endurance, TSHARC, USBCheck, VariSense, ViewSpan, WiperLock, Wireless DNA, and ZENA are trademarks of Microchip Technology Incorporated in the U.S.A. and other countries.

SQTP is a service mark of Microchip Technology Incorporated in the U.S.A.

Silicon Storage Technology is a registered trademark of Microchip Technology Inc. in other countries.

GestIC is a registered trademark of Microchip Technology Germany II GmbH & Co. KG, a subsidiary of Microchip Technology Inc., in other countries.

All other trademarks mentioned herein are property of their respective companies.

© 2015, Microchip Technology Incorporated, Printed in the U.S.A., All Rights Reserved.

ISBN: 978-1-63277-870-3

QUALITY MANAGEMENT SYSTEM
CERTIFIED BY DNV
═ ISO/TS 16949 ═

Microchip received ISO/TS-16949:2009 certification for its worldwide headquarters, design and wafer fabrication facilities in Chandler and Tempe, Arizona; Gresham, Oregon and design centers in California and India. The Company's quality system processes and procedures are for its PIC® MCUs and dsPIC® DSCs, KEELOQ® code hopping devices, Serial EEPROMs, microperipherals, nonvolatile memory and analog products. In addition, Microchip's quality system for the design and manufacture of development systems is ISO 9001:2000 certified.

© 2015 Microchip Technology Inc.

chanhvinh.com

Worldwide Sales and Service

AMERICAS

Corporate Office
2355 West Chandler Blvd.
Chandler, AZ 85224-6199
Tel: 480-792-7200
Fax: 480-792-7277
Technical Support:
http://www.microchip.com/support
Web Address:
www.microchip.com

Atlanta
Duluth, GA
Tel: 678-957-9614
Fax: 678-957-1455

Austin, TX
Tel: 512-257-3370

Boston
Westborough, MA
Tel: 774-760-0087
Fax: 774-760-0088

Chicago
Itasca, IL
Tel: 630-285-0071
Fax: 630-285-0075

Cleveland
Independence, OH
Tel: 216-447-0464
Fax: 216-447-0643

Dallas
Addison, TX
Tel: 972-818-7423
Fax: 972-818-2924

Detroit
Novi, MI
Tel: 248-848-4000

Houston, TX
Tel: 281-894-5983

Indianapolis
Noblesville, IN
Tel: 317-773-8323
Fax: 317-773-5453

Los Angeles
Mission Viejo, CA
Tel: 949-462-9523
Fax: 949-462-9608

New York, NY
Tel: 631-435-6000

San Jose, CA
Tel: 408-735-9110

Canada - Toronto
Tel: 905-673-0699
Fax: 905-673-6509

ASIA/PACIFIC

Asia Pacific Office
Suites 3707-14, 37th Floor
Tower 6, The Gateway
Harbour City, Kowloon

Hong Kong
Tel: 852-2943-5100
Fax: 852-2401-3431

Australia - Sydney
Tel: 61-2-9868-6733
Fax: 61-2-9868-6755

China - Beijing
Tel: 86-10-8569-7000
Fax: 86-10-8528-2104

China - Chengdu
Tel: 86-28-8665-5511
Fax: 86-28-8665-7889

China - Chongqing
Tel: 86-23-8980-9588
Fax: 86-23-8980-9500

China - Dongguan
Tel: 86-769-8702-9880

China - Hangzhou
Tel: 86-571-8792-8115
Fax: 86-571-8792-8116

China - Hong Kong SAR
Tel: 852-2943-5100
Fax: 852-2401-3431

China - Nanjing
Tel: 86-25-8473-2460
Fax: 86-25-8473-2470

China - Qingdao
Tel: 86-532-8502-7355
Fax: 86-532-8502-7205

China - Shanghai
Tel: 86-21-5407-5533
Fax: 86-21-5407-5066

China - Shenyang
Tel: 86-24-2334-2829
Fax: 86-24-2334-2393

China - Shenzhen
Tel: 86-755-8864-2200
Fax: 86-755-8203-1760

China - Wuhan
Tel: 86-27-5980-5300
Fax: 86-27-5980-5118

China - Xian
Tel: 86-29-8833-7252
Fax: 86-29-8833-7256

ASIA/PACIFIC

China - Xiamen
Tel: 86-592-2388138
Fax: 86-592-2388130

China - Zhuhai
Tel: 86-756-3210040
Fax: 86-756-3210049

India - Bangalore
Tel: 91-80-3090-4444
Fax: 91-80-3090-4123

India - New Delhi
Tel: 91-11-4160-8631
Fax: 91-11-4160-8632

India - Pune
Tel: 91-20-3019-1500

Japan - Osaka
Tel: 81-6-6152-7160
Fax: 81-6-6152-9310

Japan - Tokyo
Tel: 81-3-6880- 3770
Fax: 81-3-6880-3771

Korea - Daegu
Tel: 82-53-744-4301
Fax: 82-53-744-4302

Korea - Seoul
Tel: 82-2-554-7200
Fax: 82-2-558-5932 or
82-2-558-5934

Malaysia - Kuala Lumpur
Tel: 60-3-6201-9857
Fax: 60-3-6201-9859

Malaysia - Penang
Tel: 60-4-227-8870
Fax: 60-4-227-4068

Philippines - Manila
Tel: 63-2-634-9065
Fax: 63-2-634-9069

Singapore
Tel: 65-6334-8870
Fax: 65-6334-8850

Taiwan - Hsin Chu
Tel: 886-3-5778-366
Fax: 886-3-5770-955

Taiwan - Kaohsiung
Tel: 886-7-213-7828

Taiwan - Taipei
Tel: 886-2-2508-8600
Fax: 886-2-2508-0102

Thailand - Bangkok
Tel: 66-2-694-1351
Fax: 66-2-694-1350

EUROPE

Austria - Wels
Tel: 43-7242-2244-39
Fax: 43-7242-2244-393

Denmark - Copenhagen
Tel: 45-4450-2828
Fax: 45-4485-2829

France - Paris
Tel: 33-1-69-53-63-20
Fax: 33-1-69-30-90-79

Germany - Dusseldorf
Tel: 49-2129-3766400

Germany - Karlsruhe
Tel: 49-721-625370

Germany - Munich
Tel: 49-89-627-144-0
Fax: 49-89-627-144-44

Italy - Milan
Tel: 39-0331-742611
Fax: 39-0331-466781

Italy - Venice
Tel: 39-049-7625286

Netherlands - Drunen
Tel: 31-416-690399
Fax: 31-416-690340

Poland - Warsaw
Tel: 48-22-3325737

Spain - Madrid
Tel: 34-91-708-08-90
Fax: 34-91-708-08-91

Sweden - Stockholm
Tel: 46-8-5090-4654

UK - Wokingham
Tel: 44-118-921-5800
Fax: 44-118-921-5820

07/14/15

© 2015 Microchip Technology Inc.