chanhvinh.com

AVR64DA28/32/48/64

AVR® DA Family

Introduction

The AVR64DA28/32/48/64 microcontrollers of the AVR® DA family are using the AVR CPU with hardware multiplier, running at up to 24 MHz, with 64 KB of Flash, 8 KB of SRAM, and 512B of EEPROM in 28-, 32-, 48- or 64-pin packages. The AVR® DA family uses the latest technologies from Microchip Technology, with a flexible and low-power architecture including Event System, intelligent analog features, advanced digital peripherals and Peripheral Touch Controller (PTC).

AVR® DA Family Overview

The figure below shows the AVR® DA devices, laying out pin count variants and memory sizes:

- Vertical migration is possible without code modification, as these devices are fully pin and feature compatible
- Horizontal migration to the left reduces the pin count, and therefore, the available features

Figure 1. AVR® DA Family Overview

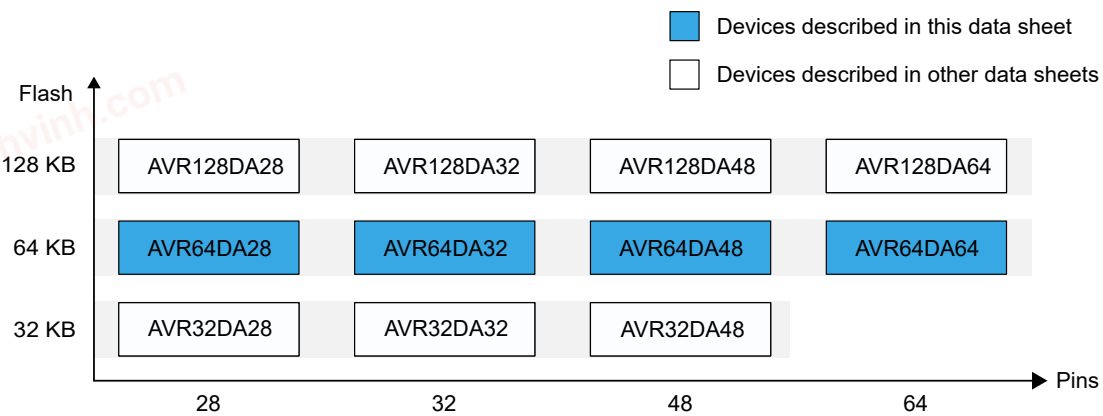

Devices with different Flash memory sizes typically also have different SRAM.

The name of a device in the AVR® DA family is decoded as follows:

Figure 2. AVR® DA Device Designations

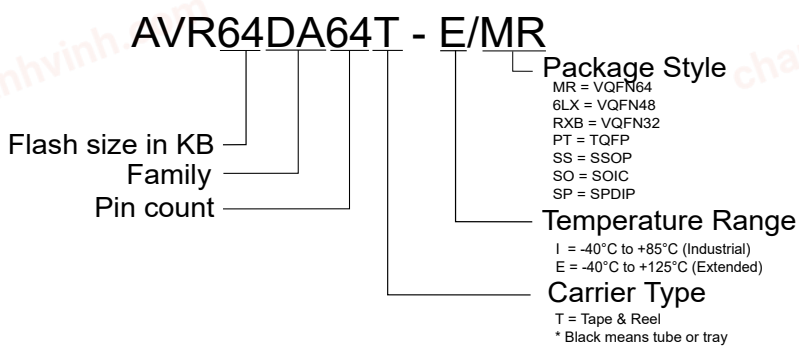

chanhvinh.com

Memory Overview

The following table shows the memory overview of the entire family. Further documentation describes only the AVR64DA28/32/48/64 devices.

Table 1. Memory Overview

Devices	AVR32DA28 AVR32DA32 AVR32DA48	AVR64DA28 AVR64DA32 AVR64DA48 AVR64DA64	AVR128DA28 AVR128DA32 AVR128DA48 AVR128DA64
Flash Memory	32 KB	64 KB	128 KB
SRAM	4 KB	8 KB	16 KB
EEPROM	512B	512B	512B
User Row	32B	32B	32B

Peripheral Overview

The following table shows the peripheral overview of the entire AVR® DA family. Further documentation describes only the AVR64DA28/32/48/64 devices.

Table 2. Peripheral Overview

Feature	AVR128DA28 AVR64DA28 AVR32DA28	AVR128DA32 AVR64DA32 AVR32DA32	AVR128DA48 AVR64DA48 AVR32DA48	AVR128DA64 AVR64DA64
Pins	**28**	**32**	**48**	**64**
Max. Frequency (MHz)	24	24	24	24
16-bit Timer/Counter type A (TCA)	1	1	2	2
16-bit Timer/Counter type B (TCB)	3	3	4	5
12-bit Timer/Counter type D (TCD)	1	1	1	1
Real-Time Counter (RTC)	1	1	1	1
USART	3	3	5	6
SPI	2	2	2	2
TWI/I^2C	1(1)	2(1)	2(1)	2(1)
12-bit Differential ADC (channels)	1 (10)	1 (14)	1 (18)	1 (22)
10-bit DAC (outputs)	1(1)	1(1)	1(1)	1(1)
Analog Comparator (AC)	3	3	3	3
Zero-Cross Detectors (ZCD)	1	1	2	3
Peripheral Touch Controller (PTC) (self-cap/mutual cap channels)	1 (18/81)	1 (22/121)	1 (32/256)	1 (46/529)
Configurable Custom Logic (CCL)	1(4)	1(4)	1(6)	1(6)
Watchdog Timer (WDT)	1	1	1	1
Event System channels	8	8	10	10

chanhvinh.com

.....continued				
Feature	**AVR128DA28 AVR64DA28 AVR32DA28**	**AVR128DA32 AVR64DA32 AVR32DA32**	**AVR128DA48 AVR64DA48 AVR32DA48**	**AVR128DA64 AVR64DA64**
Pins	**28**	**32**	**48**	**64**
General Purpose I/O(2)	23(2)	27(2)	41(2)	55(2)
PORT	PA[7:0], PC[3:0], PD[7:0], PF[6,1,0]	PA[7:0], PC[3:0], PD[7:0],PF[6:0]	PA[7:0], PB[5:0], PC[7:0], PD[7:0], PE[3:0], PF[6:0]	PA[7:0], PB[7:0], PC[7:0], PD[7:0], PE[7:0], PF[6:0], PG[7:0]
External Interrupts	23	27	41	55
CRCSCAN	1	1	1	1
Unified Program and Debug Interface (UPDI)	1	1	1	1

Notes:

1. The TWI/I^2C can operate simultaneously as host and client on different pins.
2. PF6/$\overline{\text{RESET}}$ pin is input-only.

chanhvinh.com

chanhvinh.com

Features

- AVR® CPU
  - Running at up to 24 MHz
  - Single-cycle I/O access
  - Two-level interrupt controller
  - Two-cycle hardware multiplier
  - Supply voltage range: 1.8V to 5.5V
- Memories
  - 64 KB In-System self-programmable Flash memory
  - 512B EEPROM
  - 8 KB SRAM
  - 32B of user row in nonvolatile memory that can keep data during chip-erase and be programmed while the device is locked
  - Write/erase endurance
    - Flash 10,000 cycles
    - EEPROM 100,000 cycles
  - Data retention: 40 years at 55°C
- System
  - Power-on Reset (POR) circuit
  - Brown-out Detector (BOD)
  - Clock options
    - High-Precision internal high-frequency Oscillator with selectable frequency up to 24 MHz (OSCHF)
      - Auto-tuning for improved internal oscillator accuracy
    - Internal PLL up to 48 MHz for high-frequency operation of Timer/Counter type D (PLL)
    - 32.768 kHz Ultra-Low Power internal oscillator (OSC32K)
    - 32.768 kHz external crystal oscillator (XOSC32K)
    - External clock input
  - Single-pin Unified Program and Debug Interface (UPDI)
  - Three sleep modes
    - Idle with all peripherals running for immediate wake-up
    - Standby with a configurable operation of selected peripherals
    - Power-Down with full data retention
- Peripherals
  - Up to two 16-bit Timer/Counter type A (TCA) with a dedicated period register and three PWM channels
  - Up to five 16-bit Timer/Counter type B (TCB) with input capture and simple PWM functionality
  - One 12-bit Timer/Counter type D (TCD) optimized for power control
  - One 16-bit Real-Time Counter (RTC) running from an external crystal or internal oscillator
  - Up to six USART with fractional baud rate generator, auto-baud, and start-of-frame detection
  - Two host/client Serial Peripheral Interface (SPI)
  - Up to two Two-Wire Interface (TWI) with dual address match
    - Independent host and client operation (Dual mode)
    - Philips I^2C compatible
    - Standard mode (Sm, 100 kHz)
    - Fast mode (Fm, 400 kHz)
    - Fast mode plus (Fm+, 1 MHz) (1)
  - Event System for CPU independent and predictable inter-peripheral signaling
  - Configurable Custom Logic (CCL) with up to six programmable Look-up Tables (LUT)
  - One 12-bit differential 130 ksps Analog-to-Digital Converter (ADC)
  - Three Analog Comparators (ACs) with window compare functions

© 2021 Microchip Technology Inc. and its subsidiaries

chanhvinh.com

  - One 10-bit Digital-to-Analog Converter (DAC)
  - Up to three Zero-Cross Detectors (ZCD)
  - Multiple voltage references (VREF)
    - 1.024V
    - 2.048V
    - 2.500V
    - 4.096V
  - Peripheral Touch Controller (PTC) with Driven Shield+ and Boost Mode technologies for capacitive touch buttons, sliders, wheels and 2D surface
    - Up to 46 self-capacitance and 529 mutual capacitance channels
  - Automated Cyclic Redundancy Check (CRC) Flash memory scan
  - Watchdog Timer (WDT) with Window mode, with a separate on-chip oscillator
  - External interrupt on all general purpose pins
- I/O and Packages:
  - Up to 55 programmable I/O pins
  - 28-pin SPDIP, SSOP and SOIC
  - 32-pin VQFN 5x5 mm and TQFP 7x7 mm
  - 48-pin VQFN 6x6 mm and TQFP 7x7 mm
  - 64-pin VQFN 9x9 mm and TQFP 10x10 mm
- Temperature Ranges:
  - Industrial: -40°C to +85°C
  - Extended: -40°C to +125°C

Note:

1. I^2C Fm+ is only supported for V_{DD} above 2.7V.

chanhvinh.com

chanhvinh.com

Table of Contents

Introduction....1

AVR® DA Family Overview....1

1. Memory Overview....2
2. Peripheral Overview....2

Features....4

1. Block Diagram....13

2. Pinout....14
   - 2.1. 28-Pin SPDIP, SSOP and SOIC....14
   - 2.2. 32-Pin VQFN and TQFP....15
   - 2.3. 48-Pin VQFN and TQFP....16
   - 2.4. 64-Pin VQFN and TQFP....17

3. I/O Multiplexing and Considerations....18
   - 3.1. I/O Multiplexing....18

4. Hardware Guidelines....20
   - 4.1. General Guidelines....20
   - 4.2. Connection for Power Supply....20
   - 4.3. Connection for $\overline{\text{RESET}}$....21
   - 4.4. Connection for UPDI Programming....22
   - 4.5. Connecting External Crystal Oscillators....22
   - 4.6. Connection for External Voltage Reference....23

5. Conventions....24
   - 5.1. Numerical Notation....24
   - 5.2. Memory Size and Type....24
   - 5.3. Frequency and Time....24
   - 5.4. Registers and Bits....25
   - 5.5. ADC Parameter Definitions....26

6. AVR® CPU....29
   - 6.1. Features....29
   - 6.2. Overview....29
   - 6.3. Architecture....29
   - 6.4. Functional Description....31
   - 6.5. Register Summary....35
   - 6.6. Register Description....35

7. Memories....40
   - 7.1. Overview....40
   - 7.2. Memory Map....40
   - 7.3. In-System Reprogrammable Flash Program Memory....40
   - 7.4. SRAM Data Memory....41
   - 7.5. EEPROM Data Memory....41

© 2021 Microchip Technology Inc. and its subsidiaries

chanhvinh.com

7.6. SIGROW - Signature Row....41
7.7. USERROW - User Row....46
7.8. FUSE - Configuration and User Fuses....46
7.9. LOCK - Memory Sections Access Protection....54
7.10. I/O Memory....57

8. Peripherals and Architecture....60
8.1. Peripheral Address Map....60
8.2. Interrupt Vector Mapping....62
8.3. SYSCFG - System Configuration....65

9. GPR - General Purpose Registers....68
9.1. Register Summary....69
9.2. Register Description....69

10. NVMCTRL - Nonvolatile Memory Controller....71
10.1. Features....71
10.2. Overview....71
10.3. Functional Description....72
10.4. Register Summary....80
10.5. Register Description....80

11. CLKCTRL - Clock Controller....88
11.1. Features....88
11.2. Overview....88
11.3. Functional Description....90
11.4. Register Summary....94
11.5. Register Description....94

12. SLPCTRL - Sleep Controller....105
12.1. Features....105
12.2. Overview....105
12.3. Functional Description....105
12.4. Register Summary....110
12.5. Register Description....110

13. RSTCTRL - Reset Controller....113
13.1. Features....113
13.2. Overview....113
13.3. Functional Description....114
13.4. Register Summary....118
13.5. Register Description....118

14. CPUINT - CPU Interrupt Controller....121
14.1. Features....121
14.2. Overview....121
14.3. Functional Description....122
14.4. Register Summary....127
14.5. Register Description....127

© 2021 Microchip Technology Inc.
and its subsidiaries

chanhvinh.com

15. EVSYS - Event System....132
15.1. Features....132
15.2. Overview....132
15.3. Functional Description....133
15.4. Register Summary....139
15.5. Register Description....139

16. PORTMUX - Port Multiplexer....145
16.1. Overview....145
16.2. Register Summary....146
16.3. Register Description....146

17. PORT - I/O Pin Configuration....160
17.1. Features....160
17.2. Overview....160
17.3. Functional Description....162
17.4. Register Summary - PORTx....166
17.5. Register Description - PORTx....166
17.6. Register Summary - VPORTx....183
17.7. Register Description - VPORTx....183

18. BOD - Brown-out Detector....188
18.1. Features....188
18.2. Overview....188
18.3. Functional Description....189
18.4. Register Summary....191
18.5. Register Description....191

19. VREF - Voltage Reference....198
19.1. Features....198
19.2. Overview....198
19.3. Functional Description....198
19.4. Register Summary....199
19.5. Register Description....199

20. WDT - Watchdog Timer....203
20.1. Features....203
20.2. Overview....203
20.3. Functional Description....203
20.4. Register Summary....207
20.5. Register Description....207

21. TCA - 16-bit Timer/Counter Type A....211
21.1. Features....211
21.2. Overview....211
21.3. Functional Description....213
21.4. Register Summary - Normal Mode....225
21.5. Register Description - Normal Mode....225
21.6. Register Summary - Split Mode....244

© 2021 Microchip Technology Inc.
and its subsidiaries

chanhvinh.com

21.7. Register Description - Split Mode....244

22. TCB - 16-Bit Timer/Counter Type B....260
22.1. Features....260
22.2. Overview....260
22.3. Functional Description....262
22.4. Register Summary....272
22.5. Register Description....272

23. TCD - 12-Bit Timer/Counter Type D....283
23.1. Features....283
23.2. Overview....283
23.3. Functional Description....285
23.4. Register Summary....308
23.5. Register Description....308

24. RTC - Real-Time Counter....333
24.1. Features....333
24.2. Overview....333
24.3. Clocks....334
24.4. RTC Functional Description....334
24.5. PIT Functional Description....335
24.6. Crystal Error Correction....337
24.7. Events....337
24.8. Interrupts....338
24.9. Sleep Mode Operation....339
24.10. Synchronization....339
24.11. Debug Operation....339
24.12. Register Summary....340
24.13. Register Description....340

25. USART - Universal Synchronous and Asynchronous Receiver and Transmitter....357
25.1. Features....357
25.2. Overview....357
25.3. Functional Description....358
25.4. Register Summary....373
25.5. Register Description....373

26. SPI - Serial Peripheral Interface....391
26.1. Features....391
26.2. Overview....391
26.3. Functional Description....392
26.4. Register Summary....399
26.5. Register Description....399

27. TWI - Two-Wire Interface....406
27.1. Features....406
27.2. Overview....406
27.3. Functional Description....407

chanhvinh.com

27.4. Register Summary....418
27.5. Register Description....418

28. CRCSCAN - Cyclic Redundancy Check Memory Scan....436
28.1. Features....436
28.2. Overview....436
28.3. Functional Description....436
28.4. Register Summary....439
28.5. Register Description....439

29. CCL - Configurable Custom Logic....443
29.1. Features....443
29.2. Overview....443
29.3. Functional Description....445
29.4. Register Summary....453
29.5. Register Description....453

30. AC - Analog Comparator....466
30.1. Features....466
30.2. Overview....466
30.3. Functional Description....467
30.4. Register Summary....471
30.5. Register Description....471

31. ADC - Analog-to-Digital Converter....478
31.1. Features....478
31.2. Overview....478
31.3. Functional Description....479
31.4. Register Summary....490
31.5. Register Description....490

32. DAC - Digital-to-Analog Converter....508
32.1. Features....508
32.2. Overview....508
32.3. Functional Description....508
32.4. Register Summary....510
32.5. Register Description....510

33. PTC - Peripheral Touch Controller....513
33.1. Features....513
33.2. Overview....513
33.3. Block Diagram....514
33.4. Signal Description....515
33.5. System Dependencies....515
33.6. Functional Description....516

34. ZCD - Zero-Cross Detector....517
34.1. Features....517
34.2. Overview....517

chanhvinh.com

34.3. Functional Description....518
34.4. Register Summary....525
34.5. Register Description....525

35. UPDI - Unified Program and Debug Interface....529
35.1. Features....529
35.2. Overview....529
35.3. Functional Description....531
35.4. Register Summary....551
35.5. Register Description....551

36. Instruction Set Summary....562

37. Electrical Characteristics....563
37.1. Disclaimer....563
37.2. Absolute Maximum Ratings....563
37.3. Standard Operating Conditions....563
37.4. Supply Voltage....564
37.5. Power Consumption....565
37.6. Peripherals Power Consumption....566
37.7. I/O Pins....568
37.8. Memory Programming Specifications....569
37.9. Thermal Specifications....571
37.10. CLKCTRL....571
37.11. RST and BOD....574
37.12. V_{REF}....575
37.13. USART....576
37.14. SPI....577
37.15. TWI....579
37.16. DAC....581
37.17. ADC....581
37.18. AC....582
37.19. PTC....583
37.20. ZCD....584
37.21. UPDI....584

38. Characteristics Graphs....586
38.1. Power Consumption....586
38.2. Peripheral Power Consumption....592
38.3. CLKCTRL....601
38.4. Reset Controller....603
38.5. I/O Pins....609
38.6. VREF....614
38.7. ADC....621
38.8. Temperature Sensor....627
38.9. AC....627
38.10. DAC....630
38.11. ZCD....635

chanhvinh.com

39. Ordering Information 637

40. Package Drawings 639
- 40.1. Online Package Drawings 639
- 40.2. Package Marking Information 639
- 40.3. 28-Pin SPDIP 643
- 40.4. 28-Pin SOIC 644
- 40.5. 28-Pin SSOP 647
- 40.6. 32-Pin VQFN 650
- 40.7. 32-Pin VQFN Wettable Flanks 653
- 40.8. 32-Pin TQFP 656
- 40.9. 48-Pin VQFN 659
- 40.10. 48-Pin VQFN Wettable Flanks 662
- 40.11. 48-Pin TQFP 665
- 40.12. 64-Pin VQFN 668
- 40.13. 64-Pin VQFN Wettable Flanks 671
- 40.14. 64-Pin TQFP 674

41. Data Sheet Revision History 677
- 41.1. Rev. B - 06/2021 677
- 41.2. Rev. A - 07/2020 680

The Microchip Website 681

Product Change Notification Service 681

Customer Support 681

Product Identification System 682

Microchip Devices Code Protection Feature 682

Legal Notice 682

Trademarks 683

Quality Management System 683

Worldwide Sales and Service 684

chanhvinh.com

1. Block Diagram

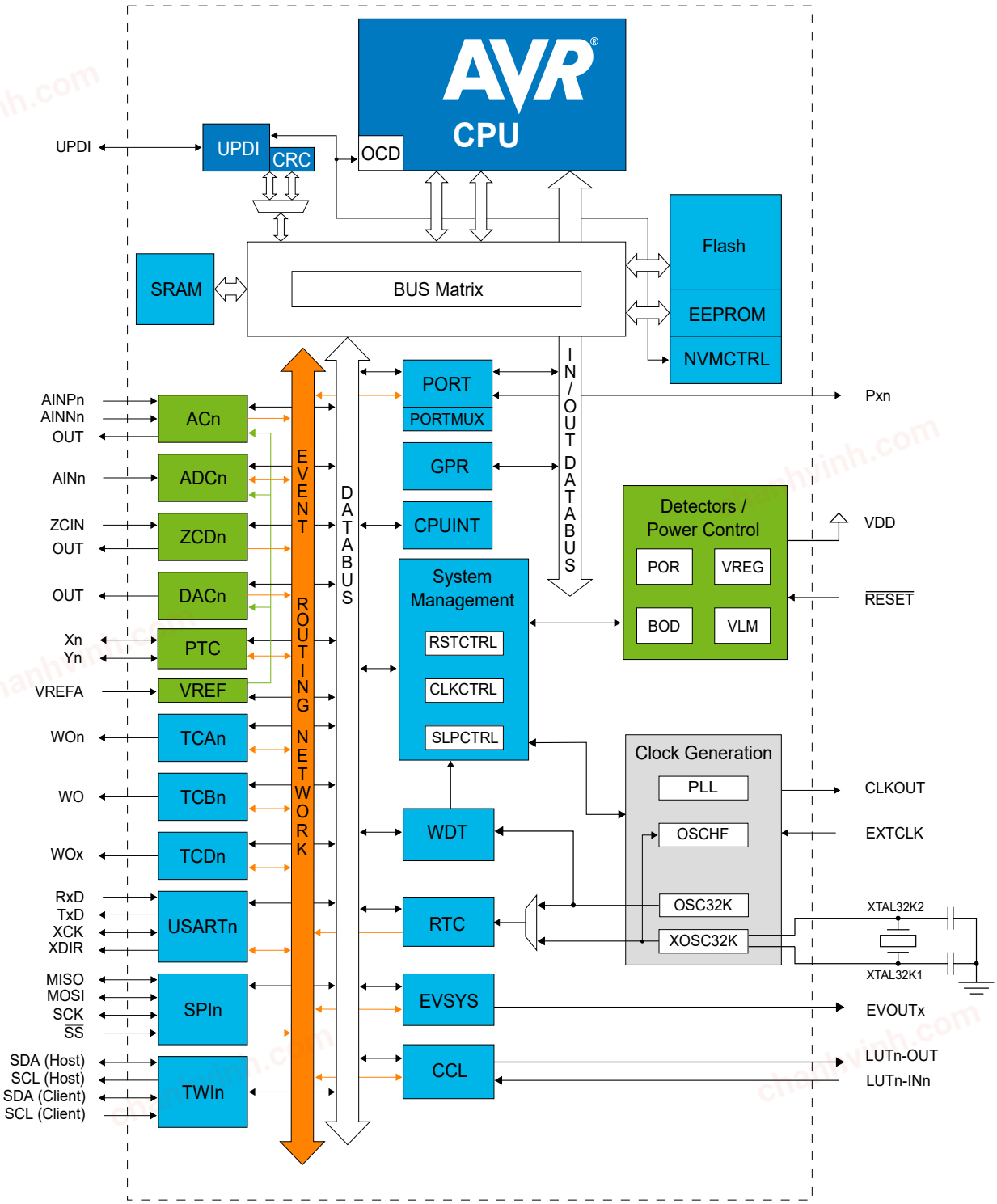

chanhvinh.com

2. Pinout

2.1 28-Pin SPDIP, SSOP and SOIC

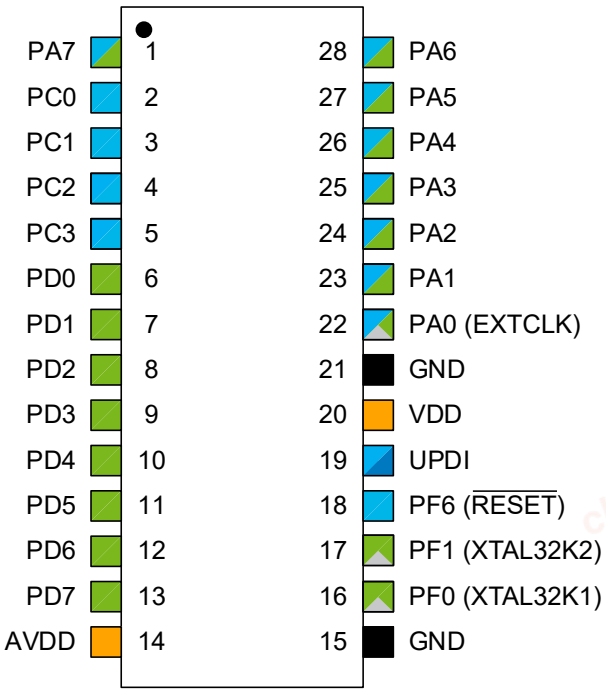

Power

- Power Supply
- Ground
- Pin on VDD Power Domain
- Pin on AVDD Power Domain

Functionality

- Programming/Debug
- Clock/Crystal
- Digital Function Only
- Analog Function

Note: For the AVR® DA Family, the VDD and AVDD are internally connected (no separate power domains).

chanhvinh.com

2.2 32-Pin VQFN and TQFP

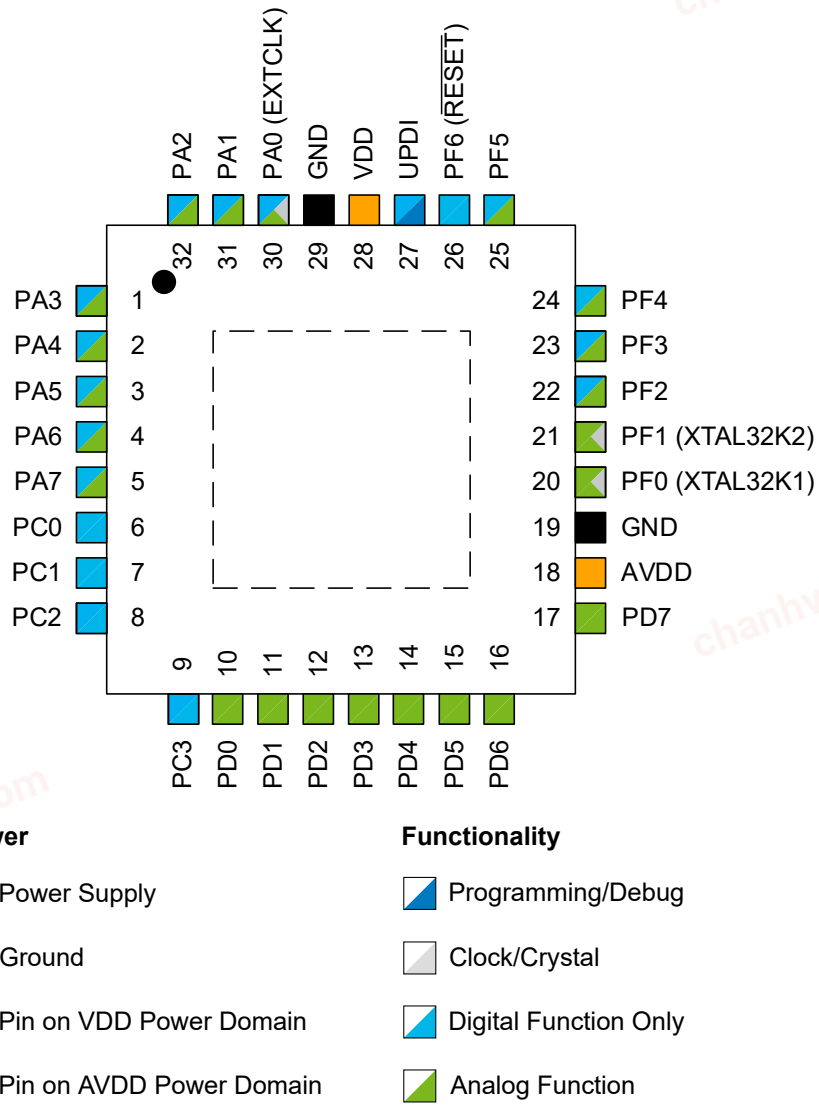

Note: For the AVR® DA Family, the VDD and AVDD are internally connected (no separate power domains).

chanhvinh.com

2.3 48-Pin VQFN and TQFP

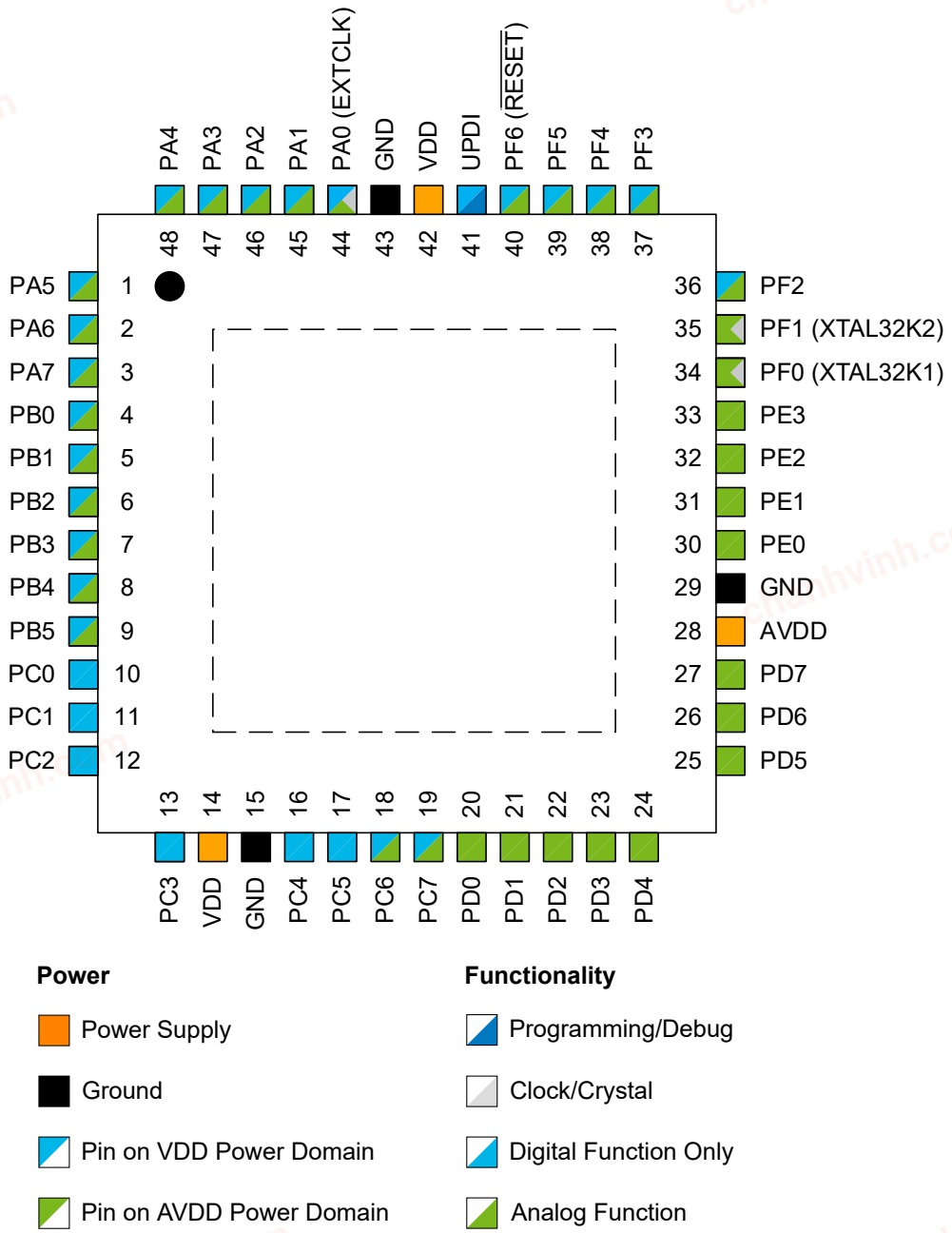

Note: For the AVR® DA Family, the VDD and AVDD are internally connected (no separate power domains).

chanhvinh.com

2.4 64-Pin VQFN and TQFP

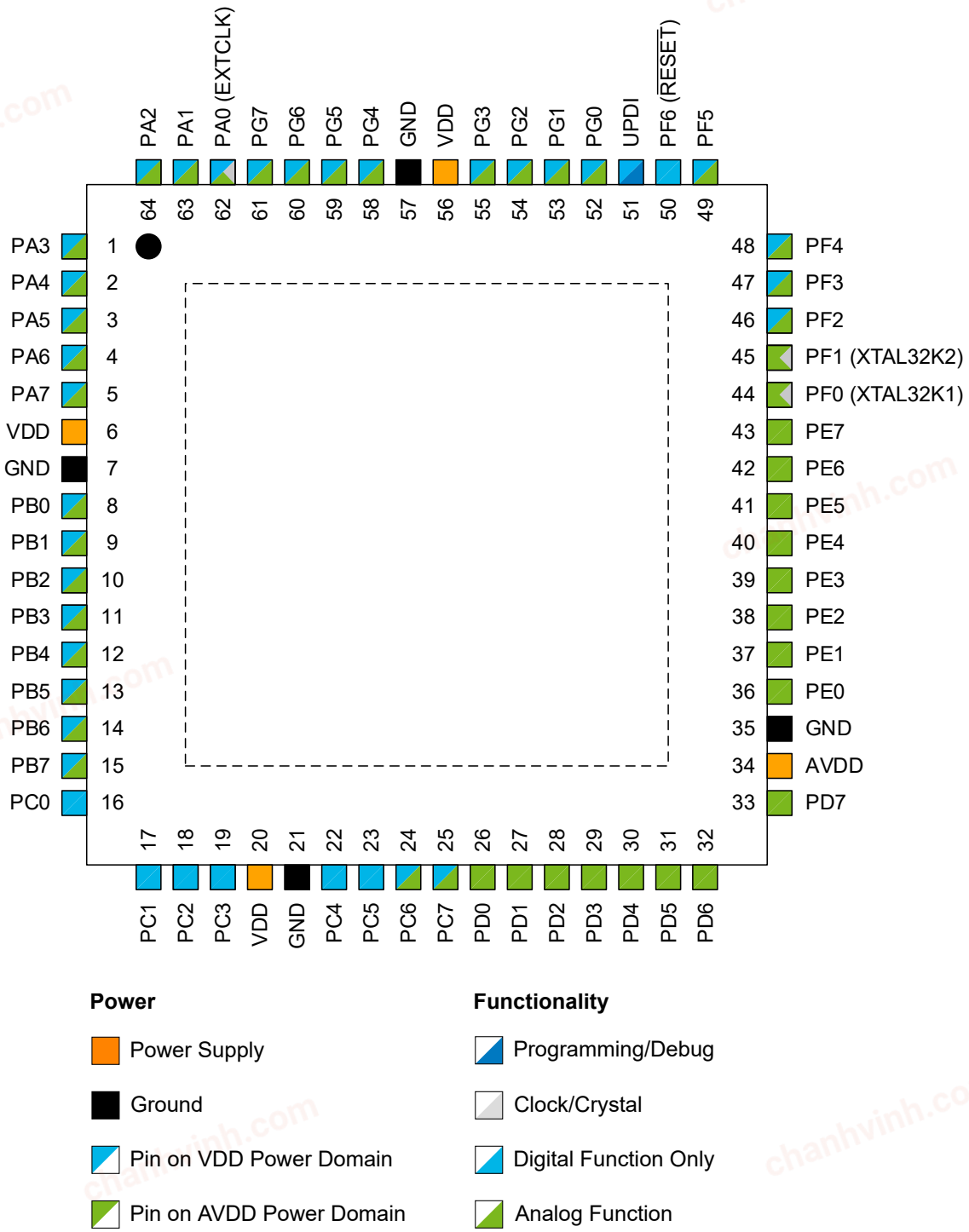

Note: For the AVR® DA Family, the VDD and AVDD are internally connected (no separate power domains).

chanhvinh.com

3. I/O Multiplexing and Considerations

3.1 I/O Multiplexing

VQFN64/ TQFP64	VQFN48/ TQFP48	VQFN32/ TQFP32	SPDIP28/ SOIC28/ SSOP28	Pin name (1,2)	Special	ADC0	PTC	ACn	DAC0	ZCDn	USARTn	SPIn	TWIn(4)	TCA0	TCA1	TCBn	TCDn	EVSYS	CCL-LUTn
62	44	30	22	PA0	EXTCLK		XO/Y0				0,TxD			WO0					0,IN0
63	45	31	23	PA1			X1/Y1				0,RxD			WO1					0,IN1
64	46	32	24	PA2	TWI		X2/Y2				0,XCK		0,SDA(H)	WO2		0,WO		EVOUTA	0,IN2
1	47	1	25	PA3	TWI		X3/Y3				0,XDIR		0,SCL(H)	WO3		1,WO			0,OUT
2	48	2	26	PA4			X4/Y4				0,TxD(3)	0,MOSI		WO4			0,WOA		
3	1	3	27	PA5			X5/Y5				0,RxD(3)	0,MISO		WO5			0,WOB		
4	2	4	28	PA6			X6/Y6				0,XCK(3)	0,SCK					0,WOC		0,OUT(3)
5	3	5	1	PA7	CLKOUT		X7/Y7	0,OUT 1,OUT 2,OUT		0,OUT 1,OUT 2,OUT	0,XDIR(3)	0,$\overline{SS}$					0,WOD	EVOUTA (3)	
6				VDD															
7				GND															
8	4			PB0			X8/Y8				3,TxD			WO0(3)	WO0				4,IN0
9	5			PB1			X9/Y9				3,RxD			WO1(3)	WO1				4,IN1
10	6			PB2			X10/Y10				3,XCK		1,SDA(H)(3)	WO2(3)	WO2			EVOUTB	4,IN2
11	7			PB3			X11/Y11				3,XDIR		1,SCL(H)(3)	WO3(3)	WO3				4,OUT
12	8			PB4			X12/Y12				3,TxD(3)	1,MOSI(3)		WO4(3)	WO4	2,WO(3)	0,WOA(3)		
13	9			PB5			X13/Y13				3,RxD(3)	1,MISO(3)		WO5(3)	WO5	3,WO	0,WOB(3)		
14				PB6			X14/Y14				3,XCK(3)	1,SCK(3)	1,SDA(C)(3)				0,WOC(3)		4,OUT(3)
15				PB7			X15/Y15				3,XDIR(3)	1,$\overline{SS}$(3)	1,SCL(C)(3)				0,WOD(3)	EVOUTB (3)	
16	10	6	2	PC0							1,TxD	1,MOSI		WO0(3)		2,WO			1,IN0
17	11	7	3	PC1							1,RxD	1,MISO		WO1(3)		3,WO(3)			1,IN1
18	12	8	4	PC2	TWI						1,XCK	1,SCK	0,SDA(H)(3)	WO2(3)				EVOUTC	1,IN2
19	13	9	5	PC3	TWI						1,XDIR	1,$\overline{SS}$	0,SCL(H)(3)	WO3(3)					1,OUT
20	14			VDD															
21	15			GND															
22	16			PC4							1,TxD(3)	1,MOSI(3)		WO4(3)	WO0(3)				
23	17			PC5							1,RxD(3)	1,MISO(3)		WO5(3)	WO1(3)				
24	18			PC6				0,OUT(3) 1,OUT(3) 2,OUT(3)			1,XCK(3)	1,SCK(3)	0,SDA(C)		WO2(3)	4,WO(3)			1,OUT(3)
25	19			PC7						0,OUT(3) 1,OUT(3) 2,OUT(3)	1,XDIR(3)	1,$\overline{SS}$(3)	0,SCL(C)					EVOUTC (3)	
26	20	10	6	PD0		AIN0	X16/Y16	0,AINN1 1,AINN1 2,AINN1						WO0(3)					2,IN0
27	21	11	7	PD1		AIN1	X17/Y17			0,ZCIN				WO1(3)					2,IN1
28	22	12	8	PD2		AIN2	X18/Y18	0,AINP0 1,AINP0 2,AINP0						WO2(3)				EVOUTD	2,IN2
29	23	13	9	PD3		AIN3	X19/Y19	0,AINN0 1,AINP1						WO3(3)					2,OUT

chanhvinh.com

.....continued

VQFN64/ TQFP64	VQFN48/ TQFP48	VQFN32/ TQFP32	SPDIP28/ SOIC28/ SSOP28	Pin name (1,2)	Special	ADC0	PTC	ACn	DAC0	ZCDn	USARTn	SPIn	TWIn(4)	TCA0	TCA1	TCBn	TCDn	EVSYS	CCL-LUTn
30	24	14	10	PD4		AIN4	X20/Y20	1,AINP2 2,AINP1						WO4(3)					
31	25	15	11	PD5		AIN5	X21/Y21	1,AINN0						WO5(3)					
32	26	16	12	PD6		AIN6	X22/Y22	0,AINP3 1,AINP3 2,AINP3	VOUT										2,OUT(3)
33	27	17	13	PD7	VREFA	AIN7	X23/Y23	0,AINN2 1,AINN2 2,AINN0/ AINN2										EVOUTD (3)	
34	28	18	14	AVDD															
35	29	19	15	GND															
36	30			PE0		AIN8	X24/Y24	0,AINP1			4,TxD	0,MOSI(3)		WO0(3)					
37	31			PE1		AIN9	X25/Y25	2,AINP2			4,RxD	0,MISO(3)		WO1(3)					
38	32			PE2		AIN10	X26/Y26	0,AINP2			4,XCK	0,SCK(3)		WO2(3)				EVOUTE	
39	33			PE3		AIN11	X27/Y27			1,ZCIN	4,XDIR	0,$\overline{SS}$(3)		WO3(3)					
40				PE4		AIN12	X28/Y28				4,TxD(3)			WO4(3)	WO0(3)				
41				PE5		AIN13	X29/Y29				4,RxD(3)			WO5(3)	WO1(3)				
42				PE6		AIN14	X30/Y30				4,XCK(3)				WO2(3)				
43				PE7		AIN15	X31/Y31			2,ZCIN	4,XDIR(3)							EVOUTE (3)	
44	34	20	16	PF0	XTAL32K1	AIN16(6)	X32/Y32				2,TxD			WO0(3)			0,WOA(3)		3,IN0
45	35	21	17	PF1	XTAL32K2	AIN17(6)	X33/Y33				2,RxD			WO1(3)			0,WOB(3)		3,IN1
46	36	22		PF2	TWI	AIN18(6)	X34/Y34				2,XCK		1,SDA(H)	WO2 (3)			0,WOC (3)	EVOUTF	3,IN2
47	37	23		PF3	TWI	AIN19(6)	X35/Y35				2, XDIR		1,SCL(H)	WO3 (3)			0,WOD (3)		3,OUT
48	38	24		PF4		AIN20(6)	X36/Y36				2, TxD (3)			WO4 (3)		0,WO (3)			
49	39	25		PF5		AIN21(6)	X37Y37				2, RxD (3)			WO5(3)		1,WO(3)			
50	40	26	18	PF6 (5)	$\overline{RESET}$														
51	41	27	19	UPDI															
52				PG0			X40/Y40				5, TxD			WO0 (3)	WO0 (3)				5,IN0
53				PG1			X41/Y41				5,RxD			WO1(3)	WO1(3)				5,IN1
54				PG2			X42/Y42				5,XCK			WO2(3)	WO2(3)			EVOUTG	5,IN2
55				PG3			X43/Y43				5,XDIR			WO3(3)	WO3(3)	4,WO			5,OUT
56	42	28	20	VDD															
57	43	29	21	GND															
58				PG4			X44/Y44				5,TxD(3)	0,MOSI(3)		WO4(3)	WO4(3)		0,WOA(3)		
59				PG5			X45/Y45				5,RxD(3)	0,MISO(3)		WO5(3)	WO5(3)		0,WOB(3)		
60				PG6			X46/Y46				5,XCK(3)	0,SCK(3)					0,WOC(3)		5,OUT(3)
61				PG7			X47/Y47				5,XDIR(3)	0,$\overline{SS}$(3)					0,WOD(3)	EVOUTG (3)	

Notes:

1. Pin names are of type P*xn*, with *x* being the PORT instance (A, B, C, ...) and *n* the pin number. Notation for signals is PORT*x*_PIN*n*. All pins can be used as event input.
2. All pins can be used for external interrupt, where pins P*x*2 and P*x*6 of each port have full asynchronous detection.
3. Alternate pin positions. For selecting the alternate positions, refer to the *Port Multiplexer* section.
4. The TWI pins that can be used as host or client are marked *H*. Pins with client only are marked *C*.
5. Input-only.
6. Positive input-only.

© 2021 Microchip Technology Inc. and its subsidiaries

chanhvinh.com

4. Hardware Guidelines

This section contains guidelines for designing or reviewing electrical schematics using AVR 8-bit microcontrollers. The information presented here is just a brief overview of the most common topics. For more detailed information, suitable application notes are presented where applicable.

The Hardware Guidelines covers the following topics:

- General guidelines
- Power supply
- RESET
- UPDI (Unified Program and Debug Interface)
- Crystal Oscillators
- External voltage references

4.1 General Guidelines

Soldering pads of unused pins should not be connected to the circuit.

The PORT pins are in their default state after Reset. Follow the recommendations in the *PORT - I/O Pin Configuration* section to reduce power consumption.

All values are given as typical values and serve only as a starting point.

Refer to the following application notes for further information:

- *AVR040 - EMC Design Considerations*
- *AVR042 - AVR Hardware Design Considerations*

4.1.1 Special Consideration for VQFN Packages

VQFN packages have a large pad on the bottom side. This pad is not electrically connected to the internal circuit of the chip, but it is mechanically bonded to the internal substrate and serves as a thermal heat sink as well as providing added mechanical stability. This pad must be connected to GND since the ground plane is the best heat sink (largest copper area) of the printed circuit board (PCB).

4.2 Connection for Power Supply

The basics and details regarding the design of the power supply itself lie beyond the scope of these guidelines. For more detailed information about this subject, see the application notes mentioned at the beginning of this section.

A decoupling capacitor should be placed close to the microcontroller for each supply pin pair (VDD, AVDD or other power supply pin and its corresponding GND pin). If you place the decoupling capacitor too far away from the microcontroller, you risk creating a high current loop that will result in increased noise and increased radiated emission.

Each supply pin pair (power input pin and ground pin) must have separate decoupling capacitors.

It is recommended to place the decoupling capacitor on the same side of the PCB as the microcontroller. If space does not allow it, the decoupling capacitor may be placed on the other side through a via, but make sure the distance to the supply pin is kept as short as possible.

If the board is experiencing high-frequency noise (upward of tens of MHz), add a second ceramic type capacitor in parallel to the decoupling capacitor described above. Place this second capacitor next to the primary decoupling capacitor.

On the board layout from the power supply circuit, run the power and return traces to the decoupling capacitors first, and then to the device pins. This ensures that the decoupling capacitors are first in the power chain. Equally important is to keep the trace length between the capacitor and the power pins to a minimum, thereby reducing PCB trace inductance.

© 2021 Microchip Technology Inc.
and its subsidiaries

chanhvinh.com

As mentioned at the beginning of this section, all values used in examples are typical values. The actual design may require other values.

4.2.1 Digital Power Supply

For larger pin count package types, there is more than one VDD pin and corresponding GND pin. All the VDD pins in the microcontroller are internally connected. The same voltage must be applied to each of the VDD pins.

The following figure shows the recommendation for connecting a power supply to the VDD pin(s) of the device.

Figure 4-1. Recommended V_{DD} Connection Circuit Schematic

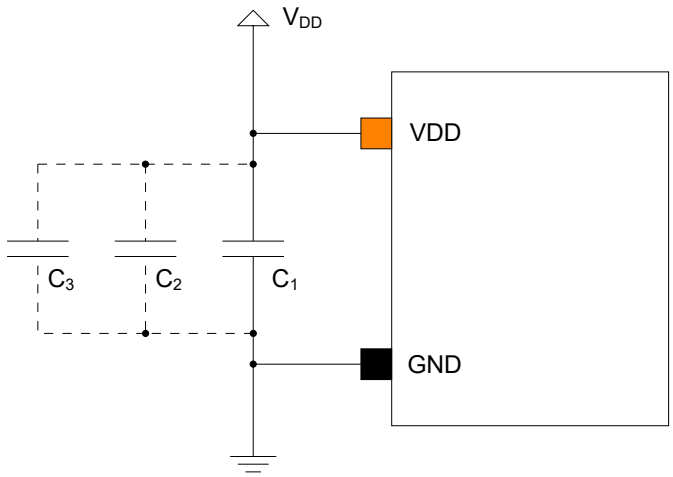

Typical values (recommended):
C_1: 100 nF (primary decoupling capacitor)
C_2: 1-10 nF (HF decoupling capacitor)
C_3(*): 1 µF (decoupling capacitor - optional)

Important: For systems that frequently cycle V_{DD} or experience fast V_{DD} transients, it is recommended to add an additional decoupling capacitor (C3) if the power supply slew rate exceeds the slew rate limits. Refer to the *Supply Voltage* section in the *Electrical Characteristics* for details about power supply slew rate limits.

4.3 Connection for $\overline{\text{RESET}}$

The $\overline{\text{RESET}}$ pin on the device is active-low, and setting the pin low externally will result in a Reset of the device.

AVR devices feature an internal pull-up resistor on the $\overline{\text{RESET}}$ pin, and an external pull-up resistor is normally not required.

The following figure shows the recommendation for connecting an external Reset switch to the device.

Figure 4-2. Recommended External Reset Circuit Schematic

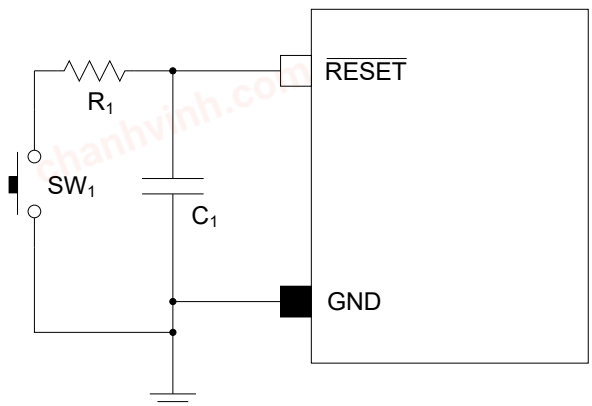

Typical values (recommended):
C_1: 100 nF (filtering capacitor)
R_1: 330Ω (switch series resistance)

chanhvinh.com

A resistor in series with the switch can safely discharge the filtering capacitor. This prevents a current surge when shorting the filtering capacitor, which again can cause a noise spike that can harm the system.

4.4 Connection for UPDI Programming

The standard connection for UPDI programming is a 100-mil 6-pin 2x3 header. Even though three pins are sufficient for programming most AVR devices, it is recommended to use a 2x3 header since most programming tools are delivered with 100-mil 6-pin 2x3 connectors.

The following figure shows the recommendation for connecting a UPDI connector to the device.

Figure 4-3. Recommended UPDI Programming Circuit Schematic

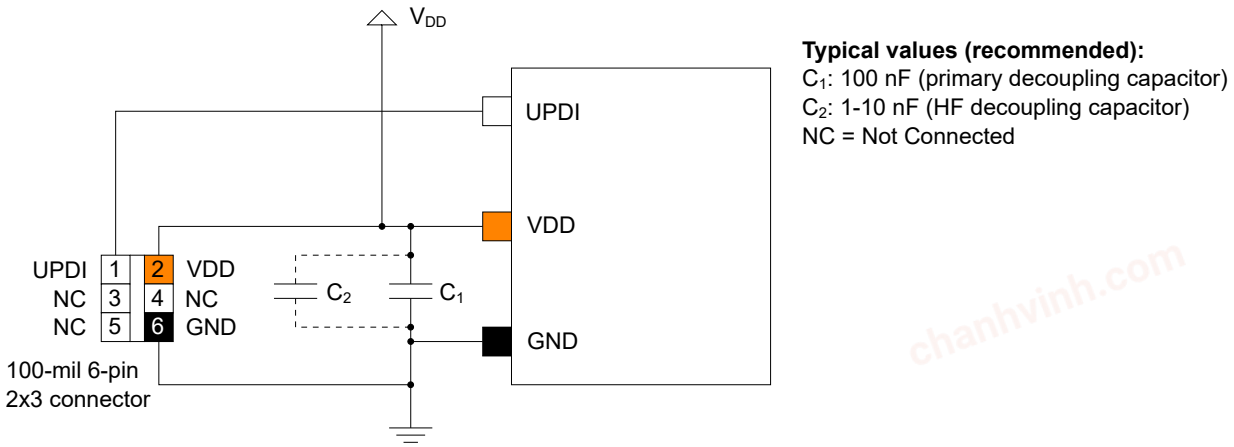

The decoupling capacitor between V_{DD} and GND should be placed as close to the pin pair as possible and should be included even if the UPDI connector is not included in the circuit.

4.5 Connecting External Crystal Oscillators

The use of external oscillators and the design of oscillator circuits is not trivial. This is because there are many variables: V_{DD}, operating temperature range, crystal type and manufacture, loading capacitors, circuit layout and PCB material. Presented here are some typical guidelines to help with the basic oscillator circuit design.

Figure 4-4. Recommended External 32.768 kHz Oscillator Connection Circuit Schematic

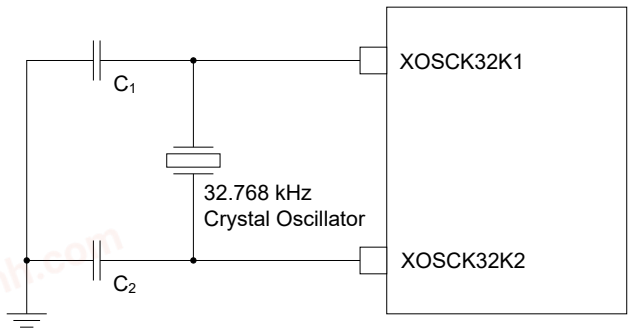

- Even the best performing oscillator circuits and high-quality crystals will not perform well if the layout and materials used during assembly are not carefully considered. Ultra low-power 32.768 kHz oscillators typically dissipate significantly below 1 µW, and the current flowing in the circuit is, therefore, extremely small. Also, the crystal frequency is highly dependent on the capacitive load.
- The crystal circuit should be placed on the same side of the board as the device. Place the crystal circuit as close to the respective oscillator pins as possible and avoid long traces. This will reduce parasitic capacitance and increase immunity against noise and crosstalk. The load capacitors should be placed next to the crystal itself, on the same side of the board. Any kind of sockets should be avoided.

© 2021 Microchip Technology Inc.
and its subsidiaries

chanhvinh.com

- Place a grounded copper area around the crystal circuit to isolate it from surrounding circuits. If the circuit board has two sides, the copper area on the bottom layer should be a solid area covering the crystal circuit. The copper area on the top layer should surround the crystal circuit and tie to the bottom layer area using via(s).
- Do not run any signal traces or power traces inside the grounded copper area. Avoid routing digital lines, especially clock lines, close to the crystal lines.
- If using a two-sided PCB, avoid any traces beneath the crystal. For a multilayer PCB, avoid routing signals below the crystal lines.
- Dust and humidity will increase parasitic capacitance and reduce signal isolation. A protective coating is recommended.
- Successful oscillator design requires good specifications of operating conditions, a component selection phase with initial testing, and testing in actual operating conditions to ensure that the oscillator performs as desired.

For more detailed information about oscillators and oscillator circuit design, read the following application notes:

- *AN2648 - Selecting and Testing 32 KHz Crystal Oscillators for AVR® Microcontrollers*
- *AN949 - Making Your Oscillator Work*

4.6 Connection for External Voltage Reference

If the design includes the use of external voltage references for analog modules, like the Analog-to-Digital Converter (ADC), the general recommendation is to use a suitable capacitor connected in parallel with the reference. The value of the capacitor depends on the nature of the reference and the type of electrical noise that needs to be filtered out.

Some references will also need additional filtering components. It is beyond the scope of these Hardware Guidelines to describe possible reference sources and their suggested filtering components, but in many cases, this will be described in the External Voltage Reference data sheet.

Figure 4-5. Recommended External Voltage Reference Connection

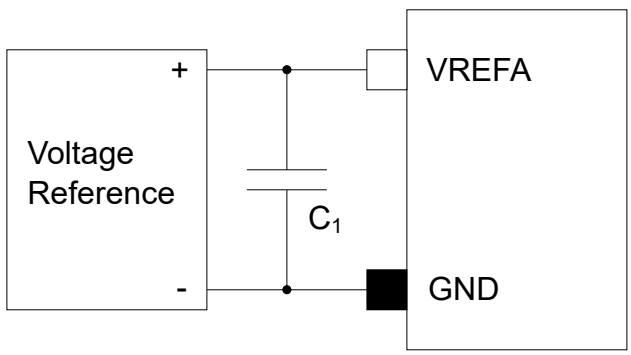

chanhvinh.com

5. Conventions

5.1 Numerical Notation

Table 5-1. Numerical Notation

Symbol	Description
165	Decimal number
0b0101	Binary number
'0101'	Binary numbers are given without prefix if unambiguous
0x3B24	Hexadecimal number
X	Represents an unknown or do not care value
Z	Represents a high-impedance (floating) state for either a signal or a bus

5.2 Memory Size and Type

Table 5-2. Memory Size and Bit Rate

Symbol	Description
KB	kilobyte (2^{10}B = 1024B)
MB	megabyte (2^{20}B = 1024 KB)
GB	gigabyte (2^{30}B = 1024 MB)
b	bit (binary '0' or '1')
B	byte (8 bits)
1 kbit/s	1,000 bit/s rate
1 Mbit/s	1,000,000 bit/s rate
1 Gbit/s	1,000,000,000 bit/s rate
word	16-bit

5.3 Frequency and Time

Table 5-3. Frequency and Time

Symbol	Description
kHz	1 kHz = 10^3 Hz = 1,000 Hz
MHz	1 MHz = 10^6 Hz = 1,000,000 Hz
GHz	1 GHz = 10^9 Hz = 1,000,000,000 Hz
ms	1 ms = 10^{-3}s = 0.001s
µs	1 µs = 10^{-6}s = 0.000001s
ns	1 ns = 10^{-9}s = 0.000000001s

chanhvinh.com

5.4 Registers and Bits

Table 5-4. Register and Bit Mnemonics

Symbol	Description
R/W	Read/Write accessible register bit. The user can read from and write to this bit.
R	Read-only accessible register bit. The user can only read this bit. Writes will be ignored.
W	Write-only accessible register bit. The user can only write this bit. Reading this bit will return an undefined value.
BITFIELD	Bitfield names are shown in uppercase. Example: INTMODE.
BITFIELD[n:m]	A set of bits from bit n down to m. Example: PINA[3:0] = {PINA3, PINA2, PINA1, PINA0}.
Reserved	Reserved bits, bit fields, and bit field values are unused and reserved for future use. For compatibility with future devices, always write reserved bits to '0' when the register is written. Reserved bits will always return zero when read.
PERIPHERALn	If several instances of the peripheral exist, the peripheral name is followed by a single number to identify one instance. Example: USARTn is the collection of all instances of the USART module, while USART3 is one specific instance of the USART module.
PERIPHERALx	If several instances of the peripheral exist, the peripheral name is followed by a single capital letter (A-Z) to identify one instance. Example: PORTx is the collection of all instances of the PORT module, while PORTB is one specific instance of the PORT module.
Reset	Value of a register after a Power-on Reset. This is also the value of registers in a peripheral after performing a software Reset of the peripheral, except for the Debug Control registers.
SET/CLR/TGL	Registers with SET/CLR/TGL suffix allow the user to clear and set bits in a register without doing a read-modify-write operation. Each SET/CLR/TGL register is paired with the register it is affecting. Both registers in a register pair return the same value when read. Example: In the PORT peripheral, the OUT and OUTSET registers form such a register pair. The contents of OUT will be modified by a write to OUTSET. Reading OUT and OUTSET will return the same value. Writing a '1' to a bit in the CLR register will clear the corresponding bit in both registers. Writing a '1' to a bit in the SET register will set the corresponding bit in both registers. Writing a '1' to a bit in the TGL register will toggle the corresponding bit in both registers.

5.4.1 Addressing Registers from Header Files

In order to address registers in the supplied C header files, the following rules apply:

1. A register is identified by <peripheral_instance_name>.<register_name>, e.g., CPU.SREG, USART2.CTRLA, or PORTB.DIR.
2. The peripheral name is given in the "Peripheral Address Map" in the "Peripherals and Architecture" section.
3. <peripheral_instance_name> is obtained by substituting any n or x in the peripheral name with the correct instance identifier.
4. When assigning a predefined value to a peripheral register, the value is constructed following the rule: <peripheral_name>_<bit_field_name>_<bit_field_value>_gc

   <peripheral_name> is <peripheral_instance_name>, but remove any instance identifier.

   <bit_field_value> can be found in the "Name" column in the tables in the Register Description sections describing the bit fields of the peripheral registers.

© 2021 Microchip Technology Inc.
and its subsidiaries

chanhvinh.com

Example 5-1. Register Assignments

```
// EVSYS channel 0 is driven by TCB3 OVF event
EVSYS.CHANNEL0 = EVSYS_CHANNEL0_TCB3_OVF_gc;

// USART0 RXMODE uses Double Transmission Speed
USART0.CTRLB = USART_RXMODE_CLK2X_gc;
```

Note: For peripherals with different register sets in different modes, <peripheral_instance_name> and <peripheral_name> must be followed by a mode name, for example:

```
// TCA0 in Normal Mode (SINGLE) uses waveform generator in frequency mode
TCA0.SINGLE.CTRL=TCA_SINGLE_WGMODE_FRQ_gc;
```

5.5 ADC Parameter Definitions

An ideal n-bit single-ended ADC converts a voltage linearly between GND and V_{REF} in 2^n steps (LSb). The lowest code is read as '0', and the highest code is read as '2^n-1'. Several parameters describe the deviation from the ideal behavior:

Offset Error The deviation of the first transition (0x000 to 0x001) compared to the ideal transition (at 0.5 LSb). Ideal value: 0 LSb.

Figure 5-1. Offset Error

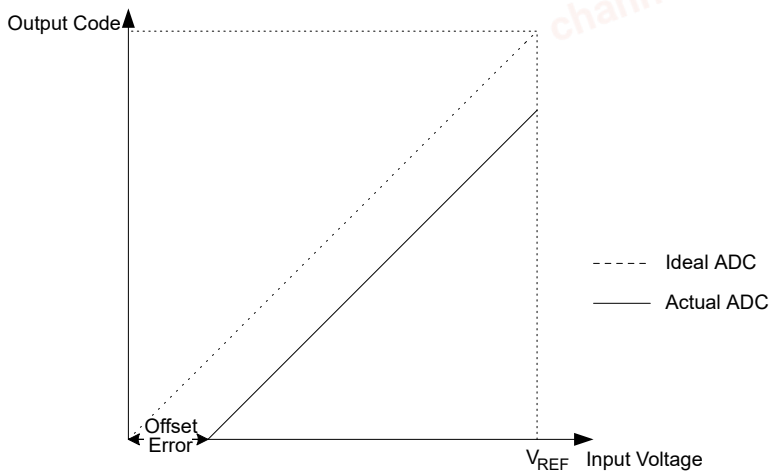

Gain Error After adjusting for offset, the gain error is found as the deviation of the last transition (e.g., 0x3FE to 0x3FF for a 10-bit ADC) compared to the ideal transition (at 1.5 LSb below maximum). Ideal value: 0 LSb.

chanhvinh.com

Figure 5-2. Gain Error

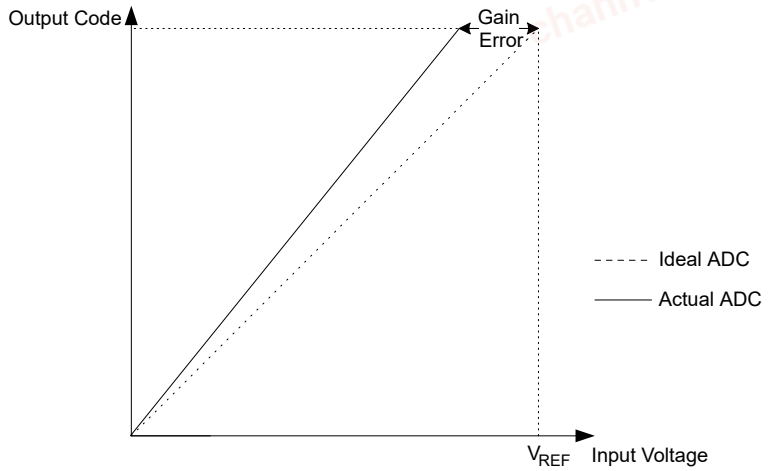

Integral Nonlinearity (INL)

After adjusting for offset and gain error, the INL is the maximum deviation of an actual transition compared to an ideal transition for any code. Ideal value: 0 LSb.

Figure 5-3. Integral Nonlinearity

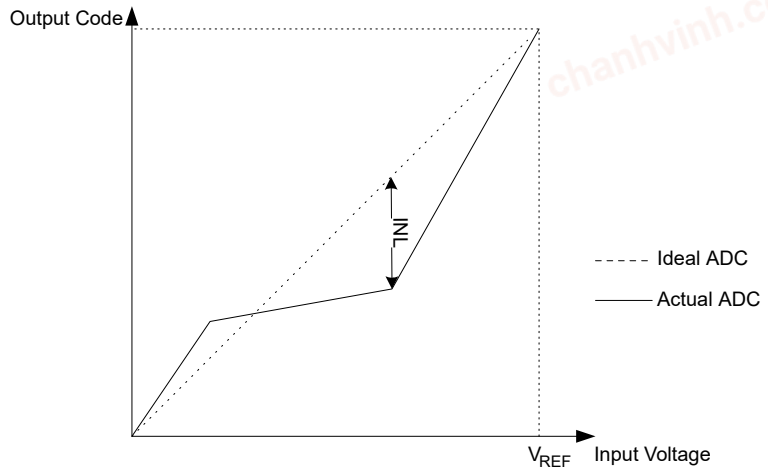

Differential Nonlinearity (DNL)

The maximum deviation of the actual code width (the interval between two adjacent transitions) from the ideal code width (1 LSb). Ideal value: 0 LSb.

Figure 5-4. Differential Nonlinearity

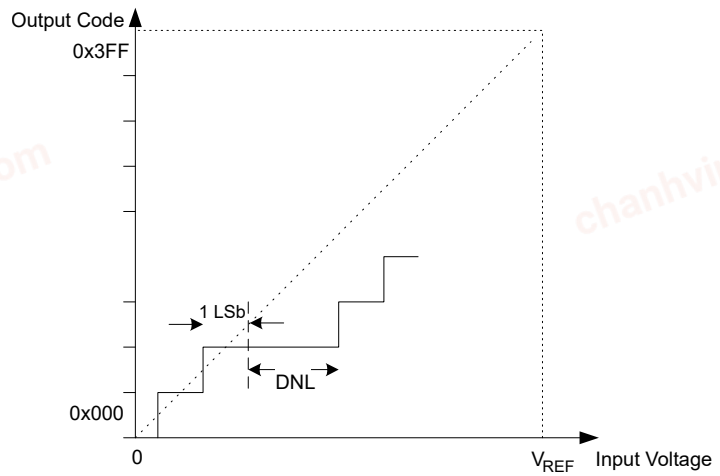

chanhvinh.com

Quantization Error	Due to the quantization of the input voltage into a finite number of codes, a range of input voltages (1 LSb wide) will code to the same value. Always ±0.5 LSb.
Absolute Accuracy	The maximum deviation of an actual (unadjusted) transition compared to an ideal transition for any code. This is the compound effect of all errors mentioned before. Ideal value: ±0.5 LSb.

chanhvinh.com

chanhvinh.com

6. AVR® CPU

6.1 Features

- 8-Bit, High-Performance AVR RISC CPU:
  - 135 instructions
  - Hardware multiplier
- 32 8-Bit Registers Directly Connected to the ALU
- Stack in RAM
- Stack Pointer Accessible in I/O Memory Space
- Direct Addressing of up to 64 KB of Unified Memory
- Efficient Support for 8-, 16-, and 32-Bit Arithmetic
- Configuration Change Protection for System-Critical Features
- Native On-Chip Debugging (OCD) Support:
  - Two hardware breakpoints
  - Change of flow, interrupt, and software breakpoints
  - Run-time read-out of Stack Pointer (SP) register, Program Counter (PC), and Status Register (SREG)
  - Register file read- and writable in Stopped mode

6.2 Overview

The AVR CPU can access memories, perform calculations, control peripherals, execute instructions from the program memory, and handle interrupts.

6.3 Architecture

To maximize performance and parallelism, the AVR CPU uses a Harvard architecture with separate buses for program and data. The instructions in the program memory are executed with a single-level pipeline. While one instruction is being executed, the next instruction is prefetched from the program memory. This enables instructions to be executed on every clock cycle.

Refer to the *Instruction Set Summary* section for a summary of all AVR instructions.

chanhvinh.com

Figure 6-1. AVR® CPU Architecture

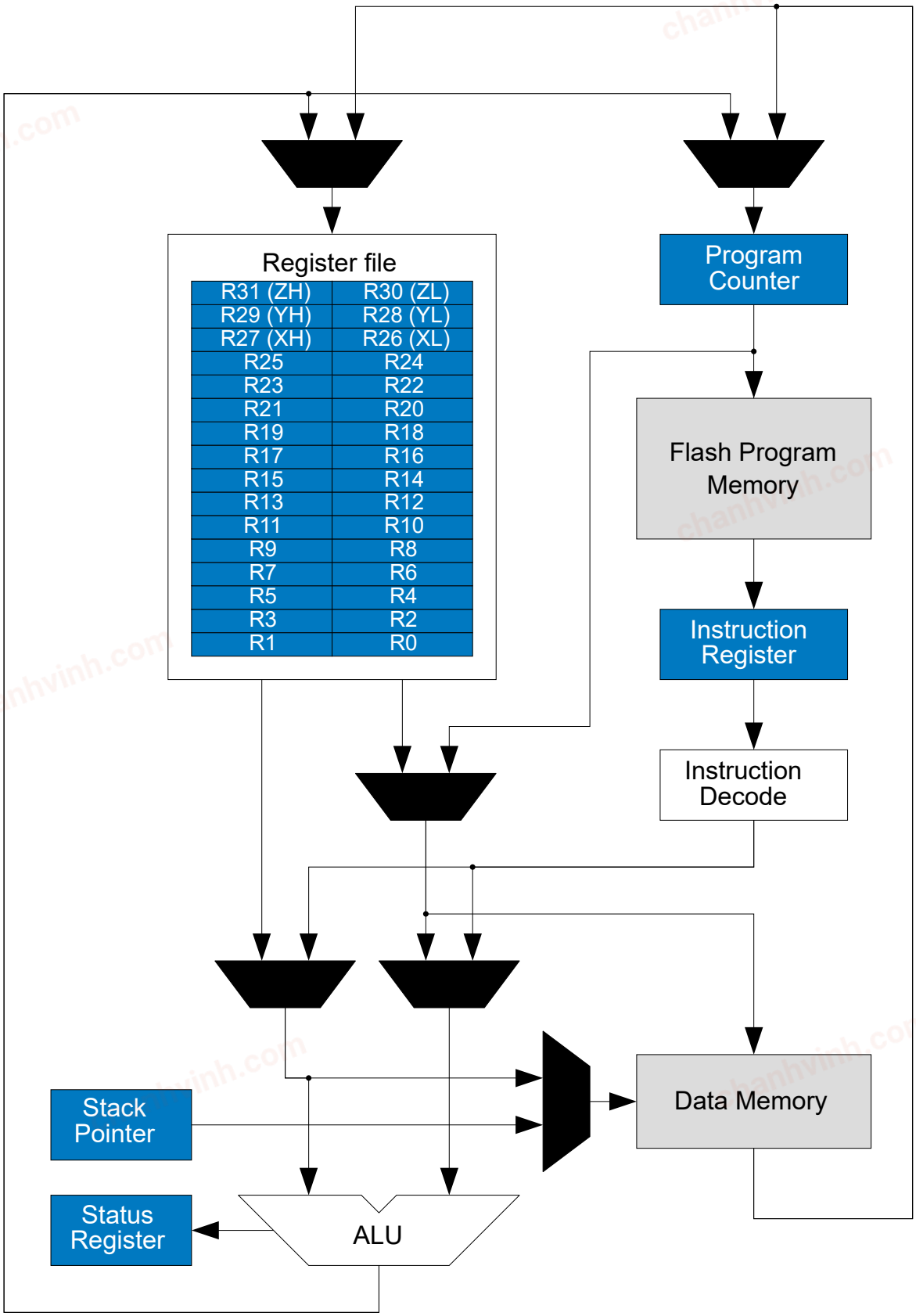

chanhvinh.com

6.3.1 Arithmetic Logic Unit (ALU)

The Arithmetic Logic Unit (ALU) supports arithmetic and logic operations between working registers or between a constant and a working register. Also, single-register operations can be executed.

The ALU operates in a direct connection with all the 32 general purpose working registers in the register file. The arithmetic operations between working registers or between a working register and an immediate operand are executed in a single clock cycle, and the result is stored in the register file. After an arithmetic or logic operation, the Status Register (CPU.SREG) is updated to reflect information about the result of the operation.

ALU operations are divided into three main categories – arithmetic, logical, and bit functions. Both 8- and 16-bit arithmetic are supported, and the instruction set allows for an efficient implementation of the 32-bit arithmetic. The hardware multiplier supports signed and unsigned multiplication and fractional formats.

6.3.1.1 Hardware Multiplier

The multiplier is capable of multiplying two 8-bit numbers into a 16-bit result. The hardware multiplier supports different variations of signed and unsigned integer and fractional numbers:

- Multiplication of signed/unsigned integers
- Multiplication of signed/unsigned fractional numbers
- Multiplication of a signed integer with an unsigned integer
- Multiplication of a signed fractional number with an unsigned fractional number

A multiplication takes two CPU clock cycles.

6.4 Functional Description

6.4.1 Program Flow

After being reset, the CPU will execute instructions from the lowest address in the Flash program memory, 0x0000. The Program Counter (PC) addresses the next instruction to be fetched.

The CPU supports instructions that can change the program flow conditionally or unconditionally and are capable of addressing the whole address space directly. Most AVR instructions use a 16-bit word format, and a limited number use a 32-bit format.

During interrupts and subroutine calls, the return address PC is stored on the stack as a word pointer. The stack is allocated in the general data SRAM, and consequently, the stack size is only limited by the total SRAM size and the usage of the SRAM. After the Stack Pointer (SP) is reset, it points to the highest address in the internal SRAM. The SP is read/write accessible in the I/O memory space, enabling easy implementation of multiple stacks or stack areas. The data SRAM can easily be accessed through the five different Addressing modes supported by the AVR CPU. See the *Instruction Set Summary* section for details.

6.4.2 Instruction Execution Timing

The AVR CPU is clocked by the CPU clock, CLK_CPU. No internal clock division is applied. The figure below shows the parallel instruction fetches and executions enabled by the Harvard architecture and the fast-access register file concept. This is the basic pipelining concept enabling up to 1 MIPS/MHz performance with high efficiency.

Figure 6-2. The Parallel Instruction Fetches and Executions

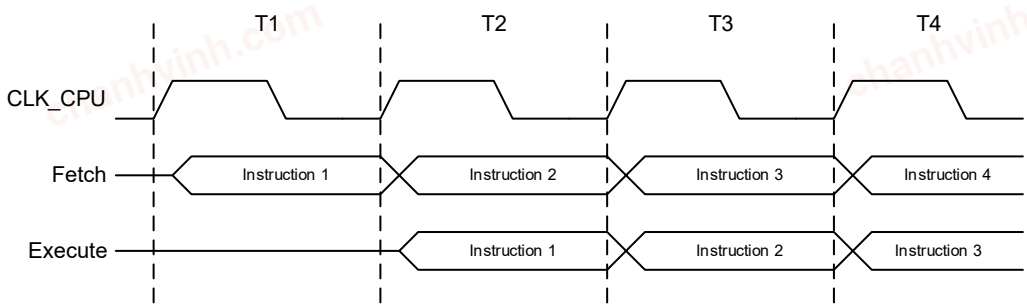

The following figure shows the internal timing concept for the register file. In a single clock cycle, an ALU operation using two register operands is executed, and the result is stored in the destination register.

chanhvinh.com

Figure 6-3. Single Cycle ALU Operation

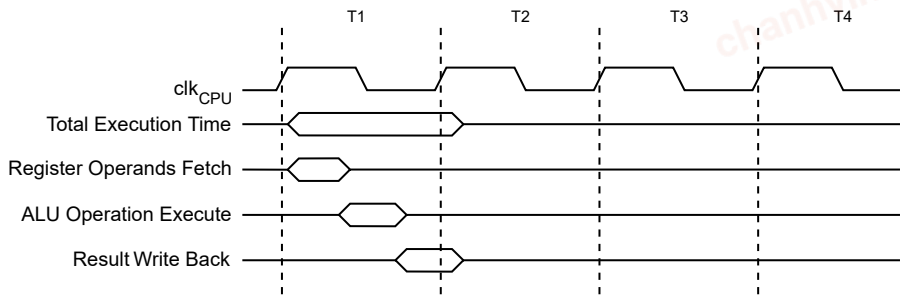

6.4.3 Status Register

The Status Register (CPU.SREG) contains information about the result of the most recently executed arithmetic or logic instructions. This information can be used for altering the program flow to perform conditional operations.

CPU.SREG is updated after all ALU operations, as specified in the *Instruction Set Summary* section, which will, in many cases, remove the need for using the dedicated compare instructions, resulting in a faster and more compact code. CPU.SREG is not automatically stored or restored when entering or returning from an Interrupt Service Routine (ISR). Therefore, maintaining the Status Register between context switches must be handled by user-defined software. CPU.SREG is accessible in the I/O memory space.

6.4.4 Stack and Stack Pointer

The stack is used for storing return addresses after interrupts and subroutine calls. Also, it can be used for storing temporary data. The Stack Pointer (SP) always points to the top of the stack. The address pointed to by the SP is stored in the Stack Pointer (CPU.SP) register. The CPU.SP is implemented as two 8-bit registers that are accessible in the I/O memory space.

Data are pushed and popped from the stack using the instructions given in Table 6-1, or by executing interrupts. The stack grows from higher to lower memory locations. This means that when pushing data onto the stack, the SP decreases, and when popping data off the stack, the SP increases. The SP is automatically set to the highest address of the internal SRAM after being reset. If the stack is changed, it must be set to point above the SRAM start address (see the *SRAM Data Memory* topic in the *Memories* section for the SRAM start address), and it must be defined before any subroutine calls are executed and before interrupts are enabled. See the table below for SP details.

Table 6-1. Stack Pointer Instructions

Instruction	Stack Pointer	Description
PUSH	Decremented by 1	Data are pushed onto the stack
CALL ICALL RCALL	Decremented by 2	A return address is pushed onto the stack with a subroutine call or interrupt
POP	Incremented by 1	Data are popped from the stack
RET RETI	Incremented by 2	A return address is popped from the stack with a return from subroutine or return from interrupt

During interrupts or subroutine calls, the return address is automatically pushed on the stack as a word, and the SP is decremented by two. The return address consists of two bytes and the Least Significant Byte (LSB) is pushed on the stack first (at the higher address). As an example, a byte pointer return address of 0x0006 is saved on the stack as 0x0003 (shifted one bit to the right), pointing to the fourth 16-bit instruction word in the program memory. The return address is popped off the stack with RETI (when returning from interrupts) and RET (when returning from subroutine calls), and the SP is incremented by two.

The SP is decremented by one when data are pushed on the stack with the PUSH instruction, and incremented by one when data are popped off the stack using the POP instruction.

© 2021 Microchip Technology Inc.
and its subsidiaries

chanhvinh.com

To prevent corruption when updating the SP from software, a write to SPL will automatically disable interrupts for up to four instructions or until the next I/O memory write, whichever comes first.

6.4.5 Register File

The register file consists of 32 8-bit general purpose working registers used by the CPU. The register file is located in a separate address space from the data memory.

All CPU instructions that operate on working registers have direct and single-cycle access to the register file. Some limitations apply to which working registers can be accessed by an instruction, like the constant arithmetic and logic instructions `SBCI`, `SUBI`, `CPI`, `ANDI`, `ORI` and `LDI`. These instructions apply to the second half of the working registers in the register file, R16 to R31. See the *AVR Instruction Set Manual* for further details.

Figure 6-4. AVR® CPU General Purpose Working Registers

7 0	Addr.	
R0	0x00	
R1	0x01	
R2	0x02	
...		
R13	0x0D	
R14	0x0E	
R15	0x0F	
R16	0x10	
R17	0x11	
...		
R26	0x1A	X-register Low Byte
R27	0x1B	X-register High Byte
R28	0x1C	Y-register Low Byte
R29	0x1D	Y-register High Byte
R30	0x1E	Z-register Low Byte
R31	0x1F	Z-register High Byte

6.4.5.1 The X-, Y-, and Z-Registers

Working registers R26...R31 have added functions besides their general purpose usage.

These registers can form 16-bit Address Pointers for indirect addressing of data memory. These three address registers are called the X-register, Y-register, and Z-register. The Z-register can also be used as Address Pointer for program memory.

Figure 6-5. The X-, Y-, and Z-Registers

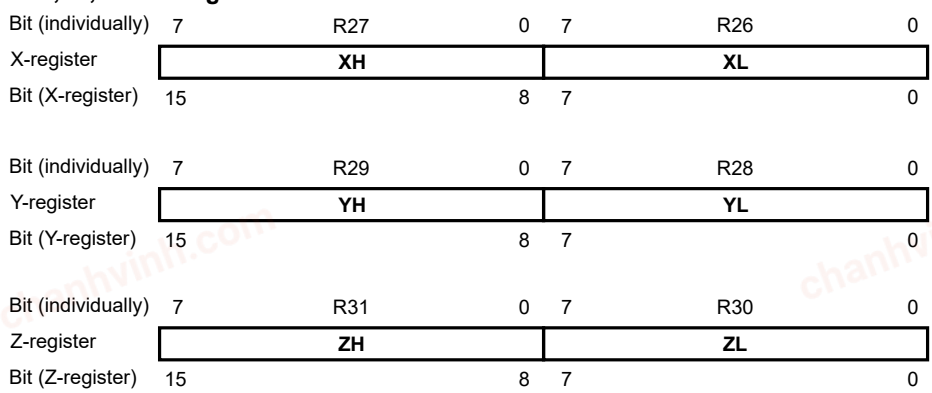

The lowest register address holds the Least Significant Byte (LSB), and the highest register address holds the Most Significant Byte (MSB). These address registers can function as fixed displacement, automatic increment, and automatic decrement, with different `LD*`/`ST*` instructions. See the *Instruction Set Summary* section for details.

chanhvinh.com

6.4.5.2 Extended Pointers

To access program memory above 64 KB, the Address Pointer must be larger than 16 bits. This is done by concatenating one of the address extension I/O registers (RAMPZ) with the internal Z-pointer. The RAMPZ register then holds the Most Significant Byte (MSB) in a 24-bit address or Address Pointer.

This address extension register is available only on devices with more than 64 KB of program memory. For the devices where extension pointers are required, only the number of bits required to address the whole program and data memory space in the device is implemented.

Figure 6-6. Combined RAMPZ + Z Register

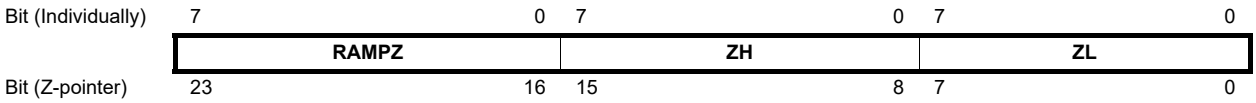

6.4.6 Configuration Change Protection (CCP)

System critical I/O register settings are protected from accidental modification. Flash self-programming is protected from accidental execution. This is handled globally by the Configuration Change Protection (CCP) register.

Changes to the protected I/O registers or bits, or execution of protected instructions, are only possible after the CPU writes a signature to the CCP register. The different signatures are listed in the description of the CCP register (CPU.CCP).

Once the correct signature is written by the CPU, interrupts will be ignored for the duration of the configuration change enable period. Any interrupt request (including non-maskable interrupts) during the CCP period will set the corresponding Interrupt flag as normal, and the request is kept pending. After the CCP period is completed, any pending interrupts are executed according to their level and priority.

There are two modes of operation: One for protected I/O registers, and one for protected self-programming.

6.4.6.1 Sequence for Write Operation to Configuration Change Protected I/O Registers

To write to registers protected by CCP, the following steps are required:

1. The software writes the signature that enables change of protected I/O registers to the CCP bit field in the CPU.CCP register.
2. Within four instructions, the software must write the appropriate data to the protected register.
   Most protected registers also contain a Write Enable/Change Enable/Lock bit. This bit must be written to '1' in the same operation as the data are written.

   The protected change is immediately disabled if the CPU performs write operations to the I/O register or data memory, if load or store accesses to Flash, NVMCTRL, or EEPROM are conducted, or if the SLEEP instruction is executed.

6.4.6.2 Sequence for Execution of Self-Programming

To execute self-programming (the execution of writes to the NVM controller's command register), the following steps are required:

1. The software temporarily enables self-programming by writing the SPM signature to the CCP register (CPU.CCP).
2. Within four instructions, the software must execute the appropriate instruction. The protected change is immediately disabled if the CPU performs accesses to the Flash, NVMCTRL, or EEPROM, or if the SLEEP instruction is executed.

6.4.7 On-Chip Debug Capabilities

The AVR CPU includes native On-Chip Debug (OCD) support. It contains some powerful debug capabilities to enable profiling and detailed information about the CPU state. It is possible to alter the CPU state and resume code execution. Also, normal debug capabilities like hardware Program Counter breakpoints, breakpoints on change of flow instructions, breakpoints on interrupts, and software breakpoints (BREAK instruction) are present. Refer to the *Unified Program and Debug Interface* section for details about OCD.

© 2021 Microchip Technology Inc.
and its subsidiaries

chanhvinh.com

6.5 Register Summary

Offset	Name	Bit Pos.	7	6	5	4	3	2	1	0
0x00 ... 0x03	Reserved									
0x04	CCP	7:0	CCP[7:0]							
0x05 ... 0x0A	Reserved									
0x0B	RAMPZ	7:0	RAMPZ[7:0]							
0x0C	Reserved									
0x0D	SP	7:0	SP[7:0]							
		15:8	SP[15:8]							
0x0F	SREG	7:0	I	T	H	S	V	N	Z	C

6.6 Register Description

chanhvinh.com

6.6.1 Configuration Change Protection

Name: CCP
Offset: 0x04
Reset: 0x00
Property: -

Bit	7	6	5	4	3	2	1	0
	CCP[7:0]							
Access	R/W	R/W	R/W	R/W	R/W	R/W	R/W	R/W
Reset	0	0	0	0	0	0	0	0

Bits 7:0 – CCP[7:0] Configuration Change Protection
Writing the correct signature to this bit field allows changing protected I/O registers or executing protected instructions within the next four CPU instructions executed.
All interrupts are ignored during these cycles. After these cycles are completed, the interrupts will automatically be handled by the CPU, and any pending interrupts will be executed according to their level and priority.
When the protected I/O register signature is written, CCP[0] will read '1' as long as the CCP feature is enabled.
When the protected self-programming signature is written, CCP[1] will read '1' as long as the CCP feature is enabled.
CCP[7:2] will always read '0'.

Value	Name	Description
0x9D	SPM	Allow self-programming
0xD8	IOREG	Unlock protected I/O registers

chanhvinh.com

6.6.2 Stack Pointer

Name: SP
Offset: 0x0D
Reset: Top of stack
Property: -

The CPU.SP register holds the Stack Pointer (SP) that points to the top of the stack. After being reset, the SP points to the highest internal SRAM address.

Only the number of bits required to address the available data memory, including external memory (up to 64 KB), is implemented for each device. Unused bits will always read '0'.

The CPU.SPL and CPU.SPH register pair represents the 16-bit value, CPU.SP. The low byte [7:0] (suffix L) is accessible at the original offset. The high byte [15:8] (suffix H) can be accessed at offset + 0x01.

To prevent corruption when updating the SP from software, a write to CPU.SPL will automatically disable interrupts for the next four instructions or until the next I/O memory write, whichever comes first.

Bit	15	14	13	12	11	10	9	8
	SP[15:8]							
Access	R/W	R/W	R/W	R/W	R/W	R/W	R/W	R/W
Reset								

Bit	7	6	5	4	3	2	1	0
	SP[7:0]							
Access	R/W	R/W	R/W	R/W	R/W	R/W	R/W	R/W
Reset								

Bits 15:8 – SP[15:8] Stack Pointer High Byte
These bits hold the MSB of the 16-bit register.

Bits 7:0 – SP[7:0] Stack Pointer Low Byte
These bits hold the LSB of the 16-bit register.

chanhvinh.com

6.6.3 Status Register

Name: SREG
Offset: 0x0F
Reset: 0x00
Property: -

The Status Register contains information about the result of the most recently executed arithmetic or logic instructions. For details about the bits in this register and how they are influenced by different instructions, see the *Instruction Set Summary* section.

Bit	7	6	5	4	3	2	1	0
	I	T	H	S	V	N	Z	C
Access	R/W	R/W	R/W	R/W	R/W	R/W	R/W	R/W
Reset	0	0	0	0	0	0	0	0

Bit 7 – I Global Interrupt Enable Bit
Writing a '1' to this bit enables interrupts on the device.
Writing a '0' to this bit disables interrupts on the device, independent of the individual interrupt enable settings of the peripherals.
This bit is not cleared by hardware while entering an Interrupt Service Routine (ISR) or set when the RETI instruction is executed.
This bit can be set and cleared by software with the SEI and CLI instructions.
Changing the I bit through the I/O register results in a one-cycle Wait state on the access.

Bit 6 – T Transfer Bit
The bit copy instructions, Bit Load (BLD) and Bit Store (BST), use the T bit as source or destination for the operated bit.

Bit 5 – H Half Carry Flag
This flag is set when there is a half carry in arithmetic operations that support this, and is cleared otherwise. Half carry is useful in BCD arithmetic.

Bit 4 – S Sign Flag
This flag is always an Exclusive Or (*XOR*) between the Negative flag (N) and the Two's Complement Overflow (V) flag.

Bit 3 – V Two's Complement Overflow Flag
This flag is set when there is an overflow in arithmetic operations that support this, and is cleared otherwise.

Bit 2 – N Negative Flag
This flag is set when there is a negative result in an arithmetic or logic operation, and is cleared otherwise.

Bit 1 – Z Zero Flag
This flag is set when there is a zero result in an arithmetic or logic operation, and is cleared otherwise.

Bit 0 – C Carry Flag
This flag is set when there is a carry in an arithmetic or logic operation, and is cleared otherwise.

© 2021 Microchip Technology Inc.
and its subsidiaries

chanhvinh.com

6.6.4 Extended Z-Pointer Register

Name: RAMPZ
Offset: 0x0B
Reset: 0x00
Property: -

This register is concatenated with the Z-register for indirect addressing (LD/LDD/ST/STD) of the whole data memory space on devices with more than 64 KB of data memory. If the device supports more than 64 KB of program memory, the RAMPZ register extends the Z-pointer to address the entire program memory using the ELPM/SPM instructions. For more details regarding the ELPM/SPM instructions usage, refer to the instruction set summary.

This register is not available if the data memory and program memory in the device are less than 64 KB.

Bit	7	6	5	4	3	2	1	0
	RAMPZ[7:0]							
Access	R/W	R/W	R/W	R/W	R/W	R/W	R/W	R/W
Reset	0	0	0	0	0	0	0	0

Bits 7:0 – RAMPZ[7:0] Extended Z-pointer Address Bits
These bits hold the MSB of the 24-bit address created by RAMPZ and the 16-bit Z-register. Only the number of bits required to address the available data and program memory is implemented for each device. Unused bits will always read '0'.

Note:

1. The LPM instruction is not influenced by the RAMPZ setting.

chanhvinh.com

7. Memories

7.1 Overview

The main memories of the AVR64DA28/32/48/64 devices are SRAM data memory space, EEPROM data memory space, and Flash program memory space. Also, the peripheral registers are located in the I/O memory space.

7.2 Memory Map

The figure below shows the memory map for the largest memory derivative in the AVR® DA family. Refer to the subsequent sections and the *Peripheral Address Map* table for further details.

Figure 7-1. Memory Map

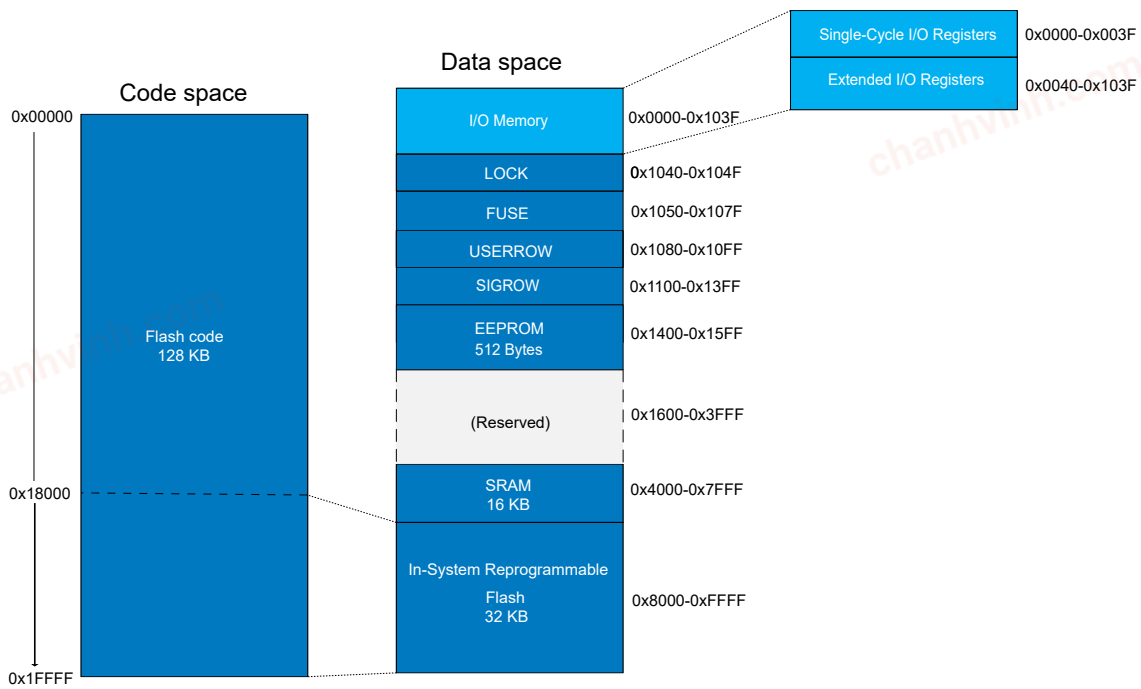

7.3 In-System Reprogrammable Flash Program Memory

The AVR64DA28/32/48/64 contains 64 KB on-chip in-system reprogrammable Flash memory for program storage. Since all AVR instructions are 16 or 32 bits wide, the Flash is organized with a 16-bit data width. For write protection, the Flash program memory space can be divided into three sections: Boot Code section, Application Code section, and Application Data section. The code placed in one section may be restricted from writing to addresses in other sections. The Program Counter (PC) is able to address the whole program memory.

Refer to the Code Size (CODESIZE) and Boot Size (BOOTSIZE) descriptions and the *Nonvolatile Memory Controller* section for further details.

chanhvinh.com

The Program Counter can address the whole program memory. The procedure for writing Flash memory is described in detail in the *Nonvolatile Memory Controller (NVMCTRL)* section.

Each 32 KB section from Flash memory can be mapped into the data memory space and will be accessible with `LD/ST` instructions. For `LD/ST` instructions, the Flash is mapped from address 0x8000 to 0xFFFF.

The entire Flash memory space can be also accessed with `LPM/SPM` instruction. For `LPM/SPM` instruction, the Flash start address is 0x0000.

Table 7-1. Physical Properties of Flash Memory

Property	AVR64DA28 AVR64DA32 AVR64DA48 AVR64DA64
Size	64 KB
Page size	512B
Number of pages	128
Start address in data space	0x8000
Start address in code space	0x0

7.4 SRAM Data Memory

The primary task of the SRAM memory is to store application data. Also, the program stack is located at the end of SRAM. It is not possible to execute from SRAM.

Table 7-2. Physical Properties of SRAM Memory

Property	AVR64DA28 AVR64DA32 AVR64DA48 AVR64DA64
Size	8 KB
Start address	0x6000

7.5 EEPROM Data Memory

The task of the EEPROM memory is to store nonvolatile application data. The EEPROM memory supports single- and multi-byte read and write. The EEPROM is controlled by the Nonvolatile Memory Controller (NVMCTRL).

Table 7-3. Physical Properties of EEPROM Memory

Property	AVR® DA Family
Size	512B
Start address	0x1400

7.6 SIGROW - Signature Row

The content of the Signature Row fuses (SIGROW) is pre-programmed and read-only. SIGROW contains information such as device ID, serial number, and calibration values.

chanhvinh.com

All the AVR64DA28/32/48/64 devices have a three-byte device ID that identifies the device. The device ID can be read using the Unified Program and Debug Interface (UPDI), also when a device is locked. The device ID for the AVR64DA28/32/48/64 devices consists of three signature bytes, which is given by the following table.

Table 7-4. Device ID

Device Name	Signature Byte Address and Value		
	0x00	0x01	0x02
AVR64DA64	0x1E	0x96	0x12
AVR64DA48	0x1E	0x96	0x13
AVR64DA32	0x1E	0x96	0x14
AVR64DA28	0x1E	0x96	0x15

chanhvinh.com

chanhvinh.com

7.6.1 Signature Row Summary

Offset	Name	Bit Pos.	7	6	5	4	3	2	1	0
0x00	DEVICEID0	7:0	DEVICEID[7:0]							
0x01	DEVICEID1	7:0	DEVICEID[7:0]							
0x02	DEVICEID2	7:0	DEVICEID[7:0]							
0x03	Reserved									
0x04	TEMPSENSE0	7:0	TEMPSENSE[7:0]							
		15:8	TEMPSENSE[15:8]							
0x06	TEMPSENSE1	7:0	TEMPSENSE[7:0]							
		15:8	TEMPSENSE[15:8]							
0x08 ... 0x0F	Reserved									
0x10	SERNUM0	7:0	SERNUM[7:0]							
...										
0x1F	SERNUM15	7:0	SERNUM[7:0]							

7.6.2 Signature Row Description

chanhvinh.com

chanhvinh.com

7.6.2.1 Device ID

Name: DEVICEIDn
Offset: 0x00 + n*0x01 [n=0..2]
Reset: [Signature byte n of device ID]
Property: -

Each device has a device ID identifying the device and its properties such as memory sizes and pin count. This can be used to identify a device and hence, the available features by software. The Device ID consists of three bytes: SIGROW.DEVICEID[2:0].

Bit	7	6	5	4	3	2	1	0
	DEVICEID[7:0]							
Access	R	R	R	R	R	R	R	R
Reset	x	x	x	x	x	x	x	x

Bits 7:0 – DEVICEID[7:0] Byte n of the Device ID

chanhvinh.com

7.6.2.2 Temperature Sensor Calibration n

Name: TEMPSENSEn
Offset: 0x04 + n*0x02 [n=0..1]
Reset: [Temperature sensor calibration value]
Property: -

The Temperature Sensor Calibration value contains correction factors for temperature measurements from the on-chip temperature sensor. The SIGROW.TEMPSENSE0 is a correction factor for the gain/slope (unsigned) and SIGROW.TEMPSENSE1 is a correction factor for the offset (signed).

Bit	15	14	13	12	11	10	9	8
	TEMPSENSE[15:8]							
Access	R	R	R	R	R	R	R	R
Reset	x	x	x	x	x	x	x	x

Bit	7	6	5	4	3	2	1	0
	TEMPSENSE[7:0]							
Access	R	R	R	R	R	R	R	R
Reset	x	x	x	x	x	x	x	x

Bits 15:0 – TEMPSENSE[15:0] Temperature Sensor Calibration word n
Refer to the *Analog-to-Digital Converter* section for a description of how to use the value stored in this bit field.

chanhvinh.com

7.6.2.3 Serial Number Byte n

Name: SERNUMn
Offset: 0x10 + n*0x01 [n=0..15]
Reset: [Byte n of device serial number]
Property: -

Each device has an individual serial number, representing a unique ID. This can be used to identify a specific device in the field. The serial number consists of 16 bytes: SIGROW.SERNUM[15:0].

Bit	7	6	5	4	3	2	1	0
	SERNUM[7:0]							
Access	R	R	R	R	R	R	R	R
Reset	x	x	x	x	x	x	x	x

Bits 7:0 – SERNUM[7:0] Serial Number Byte n

7.7 USERROW - User Row

The AVR64DA28/32/48/64 devices have a special 32-byte memory section called the User Row (USERROW). The USERROW can be used for end-production data and is not affected by chip erase. It can be written by the Unified Program and Debug Interface (UPDI) even if the part is locked, which enables storage of final configuration without having access to any other memory. When the part is locked, the UPDI is not allowed to read the content of the USERROW.

The CPU can write and read this memory as a normal Flash. Refer to the *System Memory Address Map* for further details.

7.8 FUSE - Configuration and User Fuses

Fuses are part of the nonvolatile memory and hold factory calibration and device configuration. The fuses can be read by the CPU or the UPDI, but can only be programmed or cleared by the UPDI. The configuration values stored in the fuses are written to their respective target registers at the end of the start-up sequence.

The fuses for peripheral configuration (FUSE) are preprogrammed but can be altered by the user. Altered values in the configuration fuse will be effective only after a Reset.
Note: When writing the fuses, all reserved bits must be written to '0'.

chanhvinh.com

7.8.1 Fuse Summary

Offset	Name	Bit Pos.	7	6	5	4	3	2	1	0
0x00	WDTCFG	7:0	WINDOW[3:0]				PERIOD[3:0]			
0x01	BODCFG	7:0	LVL[2:0]			SAMPFREQ	ACTIVE[1:0]		SLEEP[1:0]	
0x02	OSCCFG	7:0					CLKSEL[3:0]			
0x03 ... 0x04	Reserved									
0x05	SYSCFG0	7:0	CRCSRC[1:0]		CRCSEL		RSTPINCFG[1:0]			EESAVE
0x06	SYSCFG1	7:0						SUT[2:0]		
0x07	CODESIZE	7:0	CODESIZE[7:0]							
0x08	BOOTSIZE	7:0	BOOTSIZE[7:0]							

7.8.2 Fuse Description

chanhvinh.com

chanhvinh.com

7.8.2.1 Watchdog Configuration

Name: WDTCFG
Offset: 0x00
Default: 0x00
Property: -

The default value given in this fuse description is the factory-programmed value, and should not be mistaken for the Reset value.

Bit	7	6	5	4	3	2	1	0
	WINDOW[3:0]				PERIOD[3:0]			
Access	R	R	R	R	R	R	R	R
Default	0	0	0	0	0	0	0	0

Bits 7:4 – WINDOW[3:0] Watchdog Window Time-out Period
This value is loaded into the WINDOW bit field of the Watchdog Control A (WDT.CTRLA) register during Reset.

Bits 3:0 – PERIOD[3:0] Watchdog Time-out Period
This value is loaded into the PERIOD bit field of the Watchdog Control A (WDT.CTRLA) register during Reset.

chanhvinh.com

7.8.2.2 Brown-out Detector Configuration

Name: BODCFG
Offset: 0x01
Default: 0x00
Property: -

The bit values of this fuse register are written to the corresponding BOD configuration registers at power-up.

The default value given in this fuse description is the factory-programmed value, and should not be mistaken for the Reset value.

Bit	7	6	5	4	3	2	1	0
	LVL[2:0]			SAMPFREQ	ACTIVE[1:0]		SLEEP[1:0]	
Access	R	R	R	R	R	R	R	R
Default	0	0	0	0	0	0	0	0

Bits 7:5 – LVL[2:0] BOD Level
This value is loaded into the LVL bit field of the BOD Control B (BOD.CTRLB) register during Reset.

Value	Name	Description
0x0	BODLEVEL0	1.9V
0x1	BODLEVEL1	2.45V
0x2	BODLEVEL2	2.70V
0x3	BODLEVEL3	2.85V
Other	-	Reserved

Notes:

- Refer to *BOD and POR Characteristics* in the *Electrical Characteristics* section for further details
- Values in the description are typical values

Bit 4 – SAMPFREQ BOD Sample Frequency
This value is loaded into the Sample Frequency (SAMPFREQ) bit of the BOD Control A (BOD.CTRLA) register during Reset. Refer to the *Brown-out Detector* section for further details.

Value	Name	Description
0x0	128HZ	The sample frequency is 128 Hz
0x1	32HZ	The sample frequency is 32 Hz

Bits 3:2 – ACTIVE[1:0] BOD Operation Mode in Active and Idle
This value is loaded into the ACTIVE bit field of the BOD Control A (BOD.CTRLA) register during Reset. Refer to the *Brown-out Detector* section for further details.

Value	Name	Description
0x0	DISABLE	BOD disabled
0x1	ENABLE	BOD enabled in Continuous mode
0x2	SAMPLE	BOD enabled in Sampled mode
0x3	ENABLEWAIT	BOD enabled in Continuous mode. Execution is halted at wake-up until BOD is running.

Bits 1:0 – SLEEP[1:0] BOD Operation Mode in Sleep
The value is loaded into the SLEEP bit field of the BOD Control A (BOD.CTRLA) register during Reset. Refer to the *Brown-out Detector* section for further details.

Value	Name	Description
0x0	DISABLE	BOD disabled
0x1	ENABLE	BOD enabled in Continuous mode
0x2	SAMPLE	BOD enabled in Sampled mode
0x3	-	Reserved

© 2021 Microchip Technology Inc.
and its subsidiaries

chanhvinh.com

7.8.2.3 Oscillator Configuration

Name: OSCCFG
Offset: 0x02
Default: 0x00
Property: -

The default value given in this fuse description is the factory-programmed value, and should not be mistaken for the Reset value.

Bit	7	6	5	4	3	2	1	0
					CLKSEL[3:0]			
Access					R	R	R	R
Default					0	0	0	0

Bits 3:0 – CLKSEL[3:0] Clock Select
This bit field controls the default oscillator of the device.

Value	Name	Description
0x0	OSCHF	Device running on internal high-frequency oscillator
0x1	OSC32K	Device running on internal 32.768 kHz oscillator
Other	-	Reserved

chanhvinh.com

7.8.2.4 System Configuration 0

Name: SYSCFG0
Offset: 0x05
Default: 0xC0
Property: -

The default value given in this fuse description is the factory-programmed value, and should not be mistaken for the Reset value.

Bit	7	6	5	4	3	2	1	0
	CRCSRC[1:0]		CRCSEL		RSTPINCFG[1:0]			EESAVE
Access	R	R	R		R	R		R
Default	1	1	0		0	0		0

Bits 7:6 – CRCSRC[1:0] CRC Source
This bit field control which section of the Flash will be checked by the CRCSCAN peripheral during Reset Initialization. Refer to the *CRCSCAN* section for more information about the functionality.

Value	Name	Description
0x0	FLASH	CRC of full Flash (boot, application code, and application data)
0x1	BOOT	CRC of the Boot section
0x2	BOOTAPP	CRC of the Application code and Boot sections
0x3	NOCRC	No CRC

Bit 5 – CRCSEL CRC Mode Selection
This bit controls the type of CRC performed by the CRCSCAN peripheral. Refer to the *CRCSCAN* section for more information about the functionality.

Value	Name	Description
0x0	CRC16	CRC-16-CCITT
0x1	CRC32	CRC-32 (IEEE 802.3)

Bits 3:2 – RSTPINCFG[1:0] Reset Pin Configuration
This bit field controls the pin configuration of the Reset pin.

Value	Name	Description
0x0	INPUT	PF6 configured as general input pin.
0x1	-	Reserved
0x2	RESET	External Reset enabled on PF6
0x3	-	Reserved

Bit 0 – EESAVE EEPROM Save During Chip Erase
This bit controls if the EEPROM will be erased or not during a Chip Erase. If the device is locked, the EEPROM is always erased by a Chip Erase regardless of this bit.

Value	Description
0	EEPROM erased during Chip Erase
1	EEPROM not erased under Chip Erase

© 2021 Microchip Technology Inc. and its subsidiaries

chanhvinh.com

7.8.2.5 System Configuration 1

Name: SYSCFG1
Offset: 0x06
Default: 0x00
Property: -

The default value given in this fuse description is the factory-programmed value, and should not be mistaken for the Reset value.

Bit	7	6	5	4	3	2	1	0
						SUT[2:0]		
Access						R	R	R
Default						0	0	0

Bits 2:0 – SUT[2:0] Start-up Time
This bit field controls the start-up time between power-on and code execution.

Value	Description
0x0	0 ms
0x1	1 ms
0x2	2 ms
0x3	4 ms
0x4	8 ms
0x5	16 ms
0x6	32 ms
0x7	64 ms

© 2021 Microchip Technology Inc.
and its subsidiaries

chanhvinh.com

7.8.2.6 Code Size

Name: CODESIZE
Offset: 0x07
Default: 0x00
Property: -

The default value given in this fuse description is the factory-programmed value, and should not be mistaken for the Reset value.

Bit	7	6	5	4	3	2	1	0
	CODESIZE[7:0]							
Access	R	R	R	R	R	R	R	R
Default	0	0	0	0	0	0	0	0

Bits 7:0 – CODESIZE[7:0] Code Section Size
This bit field controls the combined size of the Boot Code section and Application Code section in blocks of 512 bytes. For more details, refer to the *Nonvolatile Memory Controller* section.
Note: If FUSE.BOOTSIZE is `0x00`, the entire Flash is the Boot Code section.

chanhvinh.com

7.8.2.7 Boot Size

Name: BOOTSIZE
Offset: 0x08
Default: 0x00
Property: -

The default value given in this fuse description is the factory-programmed value, and should not be mistaken for the Reset value.

Bit	7	6	5	4	3	2	1	0
	BOOTSIZE[7:0]							
Access	R	R	R	R	R	R	R	R
Default	0	0	0	0	0	0	0	0

Bits 7:0 – BOOTSIZE[7:0] Boot Section Size
This bit field controls the size of the boot section in blocks of 512 bytes. A value of `0x00` defines the entire Flash as Boot Code section.
For more details, refer to the *Nonvolatile Memory Controller* section.

7.9 LOCK - Memory Sections Access Protection

The device can be locked so that the memories cannot be read using the Unified Program and Debug Interface (UPDI). The locking protects both the Flash (all Boot Code, Application Code, and Application Data sections), SRAM, and the EEPROM including the FUSE data. This prevents the reading of application data or code using the debugger interface. Regular memory access from within the application is still enabled.

The device is locked by writing a non-valid key to the Lock Key (LOCK.KEY) register.

Table 7-5. Memory Access Unlocked (LOCK.KEY Valid Key)(1)

Memory Section	CPU Access		UPDI Access	
	Read	Write	Read	Write
Flash	Yes	Yes	Yes	Yes
SRAM	Yes	Yes	Yes	Yes
EEPROM	Yes	Yes	Yes	Yes
SIGROW	Yes	No	Yes	No
USERROW	Yes	Yes	Yes	Yes
FUSE	Yes	No	Yes	Yes
LOCK	Yes	No	Yes	Yes
Registers	Yes	Yes	Yes	Yes

Table 7-6. Memory Access Locked (LOCK.KEY Invalid Key)(1)

Memory Section	CPU Access		UPDI Access	
	Read	Write	Read	Write
Flash	Yes	Yes	No	No
SRAM	Yes	Yes	No	No
EEPROM	Yes	Yes	No	No
SIGROW	Yes	No	No	No

© 2021 Microchip Technology Inc.
and its subsidiaries

chanhvinh.com

.....continued

Memory Section	CPU Access		UPDI Access	
	Read	Write	Read	Write
USERROW	Yes	Yes	No	Yes(2)
FUSE	Yes	No	No	No
LOCK	Yes	No	No	No
Registers	Yes	Yes	No	No

Notes:

1. Read operations marked No in the tables may appear to be successful, but the data is not valid. Hence, any attempt of code validation through the UPDI will fail on these memory sections.
2. In the Locked mode, the USERROW can be written using the Fuse Write command, but the current USERROW values cannot be read out.

Important: The only way to unlock a device is a CHIPERASE. No application data is retained.

chanhvinh.com

7.9.1 Lock Summary

Offset	Name	Bit Pos.	7	6	5	4	3	2	1	0
0x00	KEY	7:0	KEY[7:0]							
		15:8	KEY[15:8]							
		23:16	KEY[23:16]							
		31:24	KEY[31:24]							

7.9.2 Lock Description

chanhvinh.com

7.9.2.1 Lock Key

Name: KEY
Offset: 0x00
Reset: Initial factory value 0x5CC5C55C
Property: -

Bit	31	30	29	28	27	26	25	24
	KEY[31:24]							
Access	R	R	R	R	R	R	R	R
Reset	x	x	x	x	x	x	x	x

Bit	23	22	21	20	19	18	17	16
	KEY[23:16]							
Access	R	R	R	R	R	R	R	R
Reset	x	x	x	x	x	x	x	x

Bit	15	14	13	12	11	10	9	8
	KEY[15:8]							
Access	R	R	R	R	R	R	R	R
Reset	x	x	x	x	x	x	x	x

Bit	7	6	5	4	3	2	1	0
	KEY[7:0]							
Access	R	R	R	R	R	R	R	R
Reset	x	x	x	x	x	x	x	x

Bits 31:0 – KEY[31:0] Lock Key
This bit field controls whether the device is locked or not.

Value	Name	Description
0x5CC5C55C	UNLOCKED	Device unlocked
Other	LOCKED	Device locked

7.10 I/O Memory

All AVR64DA28/32/48/64 devices I/O and peripheral registers are located in the I/O memory space. Refer to the *Peripheral Address Map* table for further details.

For compatibility with a future device, if a register containing reserved bits is written, the reserved bits should be written to '0'. Reserved I/O memory addresses should never be written.

7.10.1 Single-Cycle I/O Registers

The I/O memory ranging from 0x00 to 0x3F can be accessed by a single-cycle CPU instruction using the `IN` or `OUT` instructions.

The peripherals available in the single-cycle I/O registers are as follows:

- VPORTx
  - Refer to the *I/O Configuration* section for further details
- GPR
  - Refer to the *General Purpose Registers* section for further details
- CPU
  - Refer to the *AVR CPU* section for further details

chanhvinh.com

The single-cycle I/O registers ranging from 0x00 to 0x1F (VPORTx and GPR) are also directly bit-accessible using the `SBI` or `CBI` instruction. In these single-cycle I/O registers, single bits can be checked by using the `SBIS` or `SBIC` instruction.

Refer to the *Instruction Set Summary* section for further details.

7.10.2 Extended I/O Registers

The I/O memory space ranging from 0x0040 to 0x103F can only be accessed by the `LD/LDS/LDD` or `ST/STS/STD` instructions, transferring data between the 32 general purpose working registers (R0-R31) and the I/O memory space.

Refer to the *Peripheral Address Map* table and the *Instruction Set Summary* section for further details.

7.10.3 Accessing 16-bit Registers

Most of the registers for the AVR64DA28/32/48/64 devices are 8-bit registers, but the devices also feature a few 16-bit registers. As the AVR data bus has a width of eight bits, accessing the 16-bit requires two read or write operations. All the 16-bit registers of the AVR64DA28/32/48/64 devices are connected to the 8-bit bus through a temporary (TEMP) register.

Figure 7-2. 16-Bit Register Write Operation

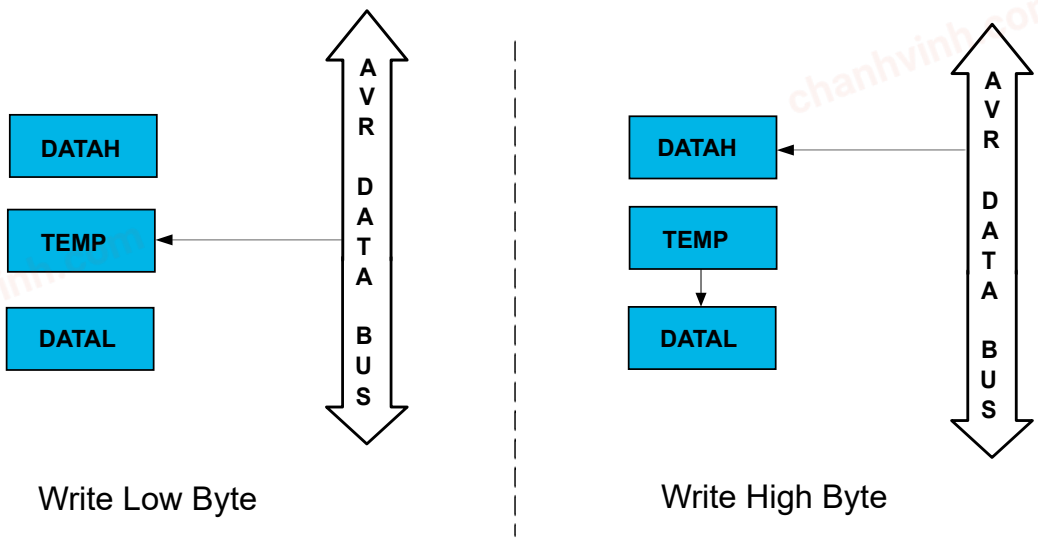

For a 16-bit write operation, the low byte register (e.g., DATAL) of the 16-bit register must be written before the high byte register (e.g., DATAH). Writing the low byte register will result in a write to the temporary (TEMP) register instead of the low byte register, as shown in the left side of Figure 7-2. When the high byte register of the 16-bit register is written, TEMP will be copied into the low byte of the 16-bit register in the same clock cycle, as shown on the right side of Figure 7-2.

chanhvinh.com

Figure 7-3. 16-Bit Register Read Operation

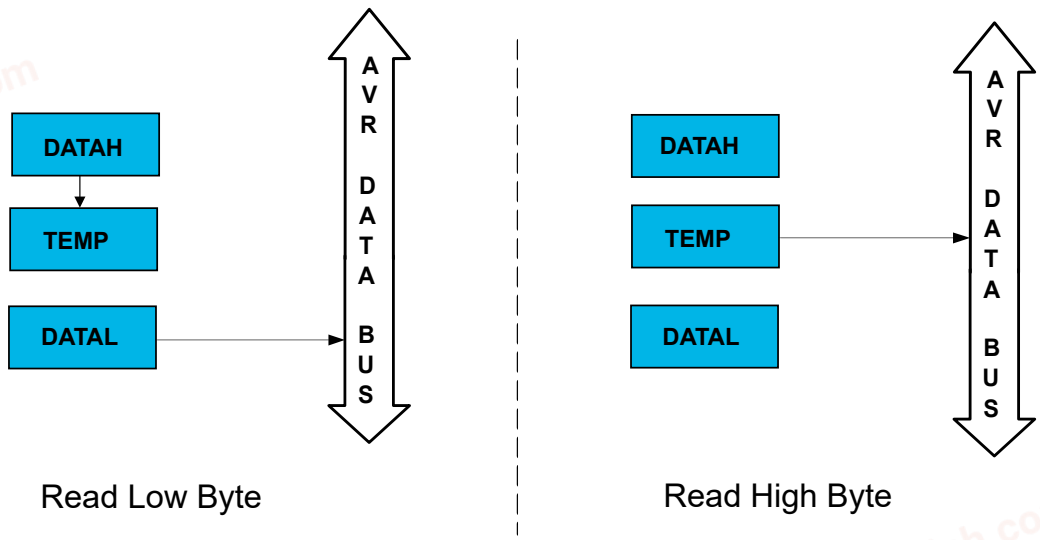

For a 16-bit read operation, the low byte register (e.g., DATAL) of the 16-bit register must be read before the high byte register (e.g., DATAH). When the low byte register is read, the high byte register of the 16-bit register is copied into the temporary (TEMP) register in the same clock cycle, as shown on the left side of Figure 7-3. Reading the high byte register will result in a read from TEMP instead of the high byte register, as shown on the right side of Figure 7-3.

The described mechanism ensures that the low and high bytes of 16-bit registers are always accessed simultaneously when reading or writing the registers.

Interrupts can corrupt the timed sequence if an interrupt is triggered during a 16-bit read/write operation, and a 16-bit register within the same peripheral is accessed in the interrupt service routine. To prevent this, interrupts should be disabled when writing or reading 16-bit registers. Alternatively, the temporary register can be read before and restored after the 16-bit access in the interrupt service routine.

7.10.4 Accessing 24-Bit Registers

For 24-bit registers, the read and write access is done in the same way as described for 16-bit registers, except there are two temporary registers for 24-bit registers. The Most Significant Byte must be written last when writing to the register, and the Least Significant Byte must be read first when reading the register.

© 2021 Microchip Technology Inc.
and its subsidiaries

chanhvinh.com

8. Peripherals and Architecture

8.1 Peripheral Address Map

The address map shows the base address for each peripheral. For a complete register description and summary for each peripheral, refer to the respective peripheral sections.

Table 8-1. Peripheral Address Map

Base Address	Name	Description	28-Pin	32-Pin	48-Pin	64-Pin
0x0000	VPORTA	Virtual Port A	X	X	X	X
0x0004	VPORTB	Virtual Port B			X	X
0x0008	VPORTC	Virtual Port C	X	X	X	X
0x000C	VPORTD	Virtual Port D	X	X	X	X
0x0010	VPORTE	Virtual Port E			X	X
0x0014	VPORTF	Virtual Port F	X	X	X	X
0x0018	VPORTG	Virtual Port G				X
0x001C	GPR	General Purpose Registers	X	X	X	X
0x0030	CPU	CPU	X	X	X	X
0x0040	RSTCTRL	Reset Controller	X	X	X	X
0x0050	SLPCTRL	Sleep Controller	X	X	X	X
0x0060	CLKCTRL	Clock Controller	X	X	X	X
0x0080	BOD	Brown-out Detector	X	X	X	X
0x00A0	VREF	Voltage Reference	X	X	X	X
0x0100	WDT	Watchdog Timer	X	X	X	X
0x0110	CPUINT	Interrupt Controller	X	X	X	X
0x0120	CRCSCAN	Cyclic Redundancy Check Memory Scan	X	X	X	X
0x0140	RTC	Real-Time Counter	X	X	X	X
0x01C0	CCL	Configurable Custom Logic	X	X	X	X
0x0200	EVSYS	Event System	X	X	X	X
0x0400	PORTA	Port A Configuration	X	X	X	X
0x0420	PORTB	Port B Configuration			X	X
0x0440	PORTC	Port C Configuration	X	X	X	X
0x0460	PORTD	Port D Configuration	X	X	X	X
0x0480	PORTE	Port E Configuration			X	X
0x04A0	PORTF	Port F Configuration	X	X	X	X
0x04C0	PORTG	Port G Configuration				X
0x05E0	PORTMUX	Port Multiplexer	X	X	X	X

© 2021 Microchip Technology Inc.
and its subsidiaries

chanhvinh.com

.....continued

Base Address	Name	Description	28-Pin	32-Pin	48-Pin	64-Pin
0x0600	ADC0	Analog-to-Digital Converter 0	X	X	X	X
0x0680	AC0	Analog Comparator 0	X	X	X	X
0x0688	AC1	Analog Comparator 1	X	X	X	X
0x0690	AC2	Analog Comparator 2	X	X	X	X
0x06A0	DAC0	Digital-to-Analog converter 0	X	X	X	X
0x06C0	ZCD0	Zero-Cross Detector 0	X	X	X	X
0x06C8	ZCD1	Zero-Cross Detector 1			X	X
0x06D0	ZCD2	Zero-Cross Detector 2				X
0x07C0	PTC	Peripheral Touch Controller	X	X	X	X
0x0800	USART0	Universal Synchronous Asynchronous Receiver Transmitter 0	X	X	X	X
0x0820	USART1	Universal Synchronous Asynchronous Receiver Transmitter 1	X	X	X	X
0x0840	USART2	Universal Synchronous Asynchronous Receiver Transmitter 2	X	X	X	X
0x0860	USART3	Universal Synchronous Asynchronous Receiver Transmitter 3			X	X
0x0880	USART4	Universal Synchronous Asynchronous Receiver Transmitter 4			X	X
0x08A0	USART5	Universal Synchronous Asynchronous Receiver Transmitter 5				X
0x0900	TWI0	Two-Wire Interface 0	X	X	X	X
0x0920	TWI1	Two-Wire Interface 1		X	X	X
0x0940	SPI0	Serial Peripheral Interface 0	X	X	X	X
0x0960	SPI1	Serial Peripheral Interface 1	X	X	X	X
0x0A00	TCA0	Timer/Counter Type A instance 0	X	X	X	X
0x0A40	TCA1	Timer/Counter Type A instance 1			X	X
0x0B00	TCB0	Timer/Counter Type B instance 0	X	X	X	X
0x0B10	TCB1	Timer/Counter Type B instance 1	X	X	X	X
0x0B20	TCB2	Timer/Counter Type B instance 2	X	X	X	X
0x0B30	TCB3	Timer/Counter Type B instance 3			X	X
0x0B40	TCB4	Timer/Counter Type B instance 4				X
0x0B80	TCD0	Timer/Counter Type D instance 0	X	X	X	X
0x0F00	SYSCFG	System Configuration	X	X	X	X
0x1000	NVMCTRL	Nonvolatile Memory Controller	X	X	X	X

© 2021 Microchip Technology Inc.
and its subsidiaries

chanhvinh.com

Table 8-2. System Memory Address Map

Base Address	Name	Description	28-Pin	32-Pin	48-Pin	64-Pin
0x1040	LOCK	Lock Bits	X	X	X	X
0x1050	FUSE	User Configuration	X	X	X	X
0x1080	USERROW	User Row	X	X	X	X
0x1100	SIGROW	Signature Row	X	X	X	X

8.2 Interrupt Vector Mapping

Each of the interrupt vectors is connected to one peripheral instance, as shown in the table below. A peripheral can have one or more interrupt sources. For more details on the available interrupt sources, see the *Interrupt* section in the *Functional Description* of the respective peripheral.

An interrupt flag is set in the Interrupt Flags register of the peripheral (peripheral.INTFLAGS) when the interrupt condition occurs, even if the interrupt is not enabled.

An interrupt is enabled or disabled by writing to the corresponding Interrupt Enable bit in the peripheral's Interrupt Control register (*peripheral*.INTCTRL).

An interrupt request is generated when the corresponding interrupt is enabled, and the interrupt flag is set. Interrupts must be enabled globally for interrupt requests to be generated. The interrupt request remains active until the interrupt flag is cleared. See the peripheral's INTFLAGS register for details on how to clear interrupt flags.

Table 8-3. Interrupt Vector Mapping

Vector Number	Program Address (word)	Peripheral Source	Description	28-Pin	32-Pin	48-Pin	64-Pin
0	0x00	RESET		X	X	X	X
1	0x02	NMI	Non-Maskable Interrupt available for CRCSCAN	X	X	X	X
2	0x04	BOD_VLM	Voltage Level Monitor Interrupt	X	X	X	X
3	0x06	RTC_CNT	Real-Time Counter Overflow or Compare Match Interrupt	X	X	X	X
4	0x08	RTC_PIT	Real-Time Counter Periodic Interrupt	X	X	X	X
5	0x0A	CCL_CCL	Configurable Custom Logic Interrupt	X	X	X	X
6	0x0C	PORTA_PORT	PORTA External interrupt	X	X	X	X
7	0x0E	TCA0 _OVF TCA0_LUNF	Normal: Timer/Counter Type A Overflow Interrupt Split: Timer/Counter Type A Low Underflow Interrupt	X	X	X	X
8	0x10	TCA0_HUNF	Normal: Unused Split: Timer/Counter Type A High Underflow Interrupt	X	X	X	X
9	0x12	TCA0_CMP0 TCA0_LCMP0	Normal: Timer/Counter Type A Compare 0 Interrupt Split: Timer/Counter Type A Low Compare 0 Interrupt	X	X	X	X
10	0x14	TCA0_CMP1 TCA0_LCMP1	Normal: Timer/Counter Type A Compare 1 Interrupt Split: Timer/Counter Type A Low Compare 1 Interrupt	X	X	X	X

© 2021 Microchip Technology Inc.
and its subsidiaries

chanhvinh.com

.....continued

Vector Number	Program Address (word)	Peripheral Source	Description	28-Pin	32-Pin	48-Pin	64-Pin
11	0x16	TCA0_CMP2 TCA0_LCMP2	Normal: Timer/Counter Type A Compare 2 Interrupt Split: Timer/Counter Type A Low Compare 2 Interrupt	X	X	X	X
12	0x18	TCB0_INT	Timer Counter Type B Capture/Overflow Interrupt	X	X	X	X
13	0x1A	TCB1_INT	Timer Counter Type B Capture/Overflow Interrupt	X	X	X	X
14	0x1C	TCD0_OVF	Timer Counter Type D Overflow Interrupt	X	X	X	X
15	0x1E	TCD0_TRIG	Timer Counter Type D Trigger Interrupt	X	X	X	X
16	0x20	TWI0_TWIS	Two-Wire Interface Client Interrupt	X	X	X	X
17	0x22	TWI0_TWIM	Two-Wire Interface Host Interrupt	X	X	X	X
18	0x24	SPI0_INT	Serial Peripheral Interface Interrupt	X	X	X	X
19	0x26	USART0_RXC	Universal Synchronous Asynchronous Receiver and Transmitter Receive Complete Interrupt	X	X	X	X
20	0x28	USART0_DRE	Universal Synchronous Asynchronous Receiver and Transmitter Data Register Empty Interrupt	X	X	X	X
21	0x2A	USART0_TXC	Universal Synchronous Asynchronous Receiver and Transmitter Transmit Complete Interrupt	X	X	X	X
22	0x2C	PORTD_PORT	PORTD External Interrupt	X	X	X	X
23	0x2E	AC0_AC	Analog Comparator Interrupt	X	X	X	X
24	0x30	ADC0_RESRDY	Analog-to-Digital Converter Result Ready Interrupt	X	X	X	X
25	0x32	ADC0_WCMP	Analog-to-Digital Converter Window Compare Interrupt	X	X	X	X
26	0x34	ZCD0_ZCD	Zero-Cross Interrupt	X	X	X	X
27	0x36	PTC_PTC	Peripheral Touch Controller Interrupt	X	X	X	X
28	0x38	AC1_AC	Analog Comparator Interrupt	X	X	X	X
29	0x3A	PORTC_PORT	PORTC External Interrupt	X	X	X	X
30	0x3C	TCB2_INT	Timer Counter Type B Capture/Overflow Interrupt	X	X	X	X
31	0x3E	USART1_RXC	Universal Synchronous Asynchronous Receiver and Transmitter Receive Complete Interrupt	X	X	X	X
32	0x40	USART1_DRE	Universal Synchronous Asynchronous Receiver and Transmitter Data Register Empty Interrupt	X	X	X	X
33	0x42	USART1_TXC	Universal Synchronous Asynchronous Receiver and Transmitter Transmit Complete Interrupt	X	X	X	X
34	0x44	PORTF_PORT	PORTF External Interrupt	X	X	X	X
35	0x46	NVMCTRL_EE	Nonvolatile Memory Controller EEPROM Ready Interrupt	X	X	X	X
36	0x48	SPI1_INT	Serial Peripheral Interface Interrupt	X	X	X	X
37	0x4A	USART2_RXC	Universal Synchronous Asynchronous Receiver and Transmitter Receive Complete Interrupt	X	X	X	X

© 2021 Microchip Technology Inc.
and its subsidiaries

chanhvinh.com

.....continued

Vector Number	Program Address (word)	Peripheral Source	Description	28-Pin	32-Pin	48-Pin	64-Pin
38	0x4C	USART2_DRE	Universal Synchronous Asynchronous Receiver and Transmitter Data Register Empty Interrupt	X	X	X	X
39	0x4E	USART2_TXC	Universal Synchronous Asynchronous Receiver and Transmitter Transmit Complete Interrupt	X	X	X	X
40	0x50	AC2_AC	Analog Comparator Interrupt	X	X	X	X
41	0x52	TCB3_INT	Timer Counter Type B Capture/Overflow Interrupt			X	X
42	0x54	TWI1_TWIS	Two-Wire Interface Client Interrupt		X	X	X
43	0x56	TWI1_TWIM	Two-Wire Interface Host Interrupt		X	X	X
44	0x58	PORTB_PORT	PORTB External Interrupt			X	X
45	0x5A	PORTE_PORT	PORTE External Interrupt			X	X
46	0x5C	TCA1 _OVF TCA1_LUNF	Normal: Timer/Counter Type A Overflow Interrupt Split: Timer/Counter Type A Low Underflow Interrupt			X	X
47	0x5E	TCA1_HUNF	Normal: Unused Split: Timer/Counter Type A High Underflow Interrupt			X	X
48	0x60	TCA1_CMP0 TCA1_LCMP0	Normal: Timer/Counter Type A Compare 0 Interrupt Split: Timer/Counter Type A Low Compare 0 Interrupt			X	X
49	0x62	TCA1_CMP1 TCA1_LCMP1	Normal: Timer/Counter Type A Compare 1 Interrupt Split: Timer/Counter Type A Low Compare 1 Interrupt			X	X
50	0x64	TCA1_CMP2 TCA1_LCMP2	Normal: Timer/Counter Type A Compare 2 Interrupt Split: Timer/Counter Type A Low Compare 2 Interrupt			X	X
51	0x66	ZCD1_ZCD	Zero-Cross Interrupt			X	X
52	0x68	USART3_RXC	Universal Synchronous Asynchronous Receiver and Transmitter Receive Complete Interrupt			X	X
53	0x6A	USART3_DRE	Universal Synchronous Asynchronous Receiver and Transmitter Data Register Empty Interrupt			X	X
54	0x6C	USART3_TXC	Universal Synchronous Asynchronous Receiver and Transmitter Transmit Complete Interrupt			X	X
55	0x6E	USART4_RXC	Universal Synchronous Asynchronous Receiver and Transmitter Receive Complete Interrupt			X	X
56	0x70	USART4_DRE	Universal Synchronous Asynchronous Receiver and Transmitter Data Register Empty Interrupt			X	X
57	0x72	USART4_TXC	Universal Synchronous Asynchronous Receiver and Transmitter Transmit Complete Interrupt			X	X
58	0x74	PORTG_PORT	PORTG External Interrupt				X
59	0x76	ZCD2 _ZCD	Zero-Cross Interrupt				X
60	0x78	TCB4_INT	Timer Counter Type B Capture/Overflow Interrupt				X

© 2021 Microchip Technology Inc.
and its subsidiaries

chanhvinh.com

.....continued

Vector Number	Program Address (word)	Peripheral Source	Description	28-Pin	32-Pin	48-Pin	64-Pin
61	0x7A	USART5_RXC	Universal Synchronous Asynchronous Receiver and Transmitter Receive Complete Interrupt				X
62	0x7C	USART5_DRE	Universal Synchronous Asynchronous Receiver and Transmitter Data Register Empty Interrupt				X
63	0x7E	USART5_TXC	Universal Synchronous Asynchronous Receiver and Transmitter Transmit Complete Interrupt				X

8.3 SYSCFG - System Configuration

The system configuration contains the revision ID of the part. The revision ID is readable from the CPU, making it useful for implementing application changes between part revisions.

chanhvinh.com

chanhvinh.com

8.3.1 Register Summary

Offset	Name	Bit Pos.	7	6	5	4	3	2	1	0
0x00	Reserved									
0x01	REVID	7:0	MAJOR[3:0]				MINOR[3:0]			

8.3.2 Register Description

© 2021 Microchip Technology Inc.
and its subsidiaries

chanhvinh.com

8.3.2.1 Device Revision ID Register

Name: REVID
Offset: 0x01
Reset: [revision ID]
Property: -

This register is read-only and gives the device revision ID.

Bit	7	6	5	4	3	2	1	0
	MAJOR[3:0]				MINOR[3:0]			
Access	R	R	R	R	R	R	R	R
Reset	x	x	x	x	x	x	x	x

Bits 7:4 – MAJOR[3:0] Major revision
This bit field contains the major revision for the device. 0x01 = A, 0x02 = B, and so on.

Bits 3:0 – MINOR[3:0] Minor revision
This bit field contains the minor revision for the device. 0x00 = 0, 0x01 = 1, and so on.

chanhvinh.com

chanhvinh.com

9. GPR - General Purpose Registers

The AVR64DA28/32/48/64 devices provide four General Purpose Registers. These registers can be used for storing any information, and they are particularly useful for storing global variables and interrupt flags. General Purpose Registers, which reside in the address range 0x1C - 0x1F, are directly bit-accessible using the `SBI`, `CBI`, `SBIS`, and `SBIC` instructions.

chanhvinh.com

chanhvinh.com

9.1 Register Summary

Offset	Name	Bit Pos.	7	6	5	4	3	2	1	0
0x00	GPR0	7:0	GPR[7:0]							
0x01	GPR1	7:0	GPR[7:0]							
0x02	GPR2	7:0	GPR[7:0]							
0x03	GPR3	7:0	GPR[7:0]							

9.2 Register Description

chanhvinh.com

9.2.1 General Purpose Register n

Name: GPRn
Offset: 0x00 + n*0x01 [n=0..3]
Reset: 0x00
Property: -

These are general purpose registers that can be used to store data, such as global variables and flags, in the bit accessible I/O memory space.

Bit	7	6	5	4	3	2	1	0
	GPR[7:0]							
Access	R/W	R/W	R/W	R/W	R/W	R/W	R/W	R/W
Reset	0	0	0	0	0	0	0	0

Bits 7:0 – GPR[7:0] General Purpose Register Byte

chanhvinh.com

10. NVMCTRL - Nonvolatile Memory Controller

10.1 Features

- Unified Memory
- In-System Programmable
- Self-Programming and Boot Loader Support
- Configurable Sections for Write Protection:
  - Boot section for boot loader code or application code
  - Application code section for application code
  - Application data section for application code or data storage
- Signature Row for Factory-Programmed Data:
  - ID for each device type
  - Serial number for each device
  - Calibration bytes for factory-calibrated peripherals
- User Row for Application Data:
  - Can be read and written from software
  - Can be written from UPDI on a locked device
  - Content is kept after chip erase

10.2 Overview

The NVM Controller (NVMCTRL) is the interface between the CPU and Nonvolatile Memories (Flash, EEPROM, Signature Row, User Row, and fuses). These are reprogrammable memory blocks that retain their values when they are not powered. The Flash is mainly used for program storage and can also be used for data storage, while the EEPROM, Signature Row, User Row, and fuses are used for data storage.

chanhvinh.com

10.2.1 Block Diagram

Figure 10-1. NVMCTRL Block Diagram

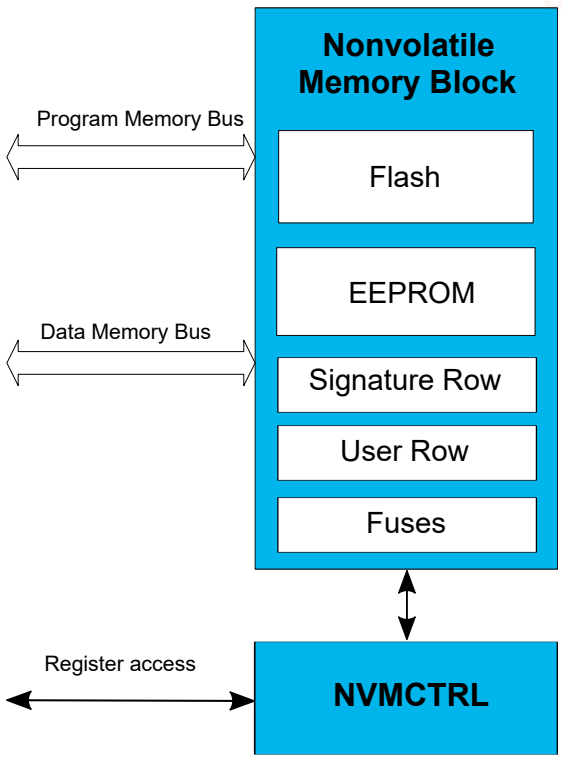

10.3 Functional Description

10.3.1 Memory Organization

10.3.1.1 Flash

The Flash is divided into a set of pages. A page is the smallest addressable unit when erasing the Flash. It is only possible to erase an entire page or multiple pages at a time. Writes can be done per byte or word. One page consists of 512 bytes.

The Flash can be divided into three sections, each consisting of a variable number of pages. These sections are:

Boot Loader Code (BOOT) Section
The Flash section with full write access. Boot loader software must be placed in this section if used.

Application Code (APPCODE) Section
The Flash section with limited write access. An executable application code is usually placed in this section.

Application Data (APPDATA) Section
The Flash section without write access. Parameters are usually placed in this section.

Inter-Section Write Protection
For security reasons, it is not possible to write to the section of Flash the code is currently executing from. Code writing to the APPCODE section needs to be executed from the BOOT section, and code writing to the APPDATA section needs to be executed from either the BOOT section or the APPCODE section.

© 2021 Microchip Technology Inc. and its subsidiaries

chanhvinh.com

Table 10-1. Write Protection for Self-Programming

Program Execution Section	Section Being Addressed	Programming Allowed?	CPU Halted?
BOOT	BOOT	No	-
	APPCODE	Yes	Yes
	APPDATA		Yes
	EEPROM		No
APPCODE	BOOT	No	-
	APPCODE		
	APPDATA	Yes	Yes
	EEPROM		No
APPDATA	BOOT	No	-
	APPCODE		
	APPDATA		
	EEPROM		

Section Sizes

The sizes of these sections are set by the Boot Size (FUSE.BOOTSIZE) fuse and the Code Size (FUSE.CODESIZE) fuse. The fuses select the section sizes in blocks of 512 bytes. The BOOT section stretches from FLASHSTART to BOOTEND. The APPCODE section spreads from BOOTEND until APPEND. The remaining area is the APPDATA section.

Figure 10-2. Flash Sections Sizes and Locations

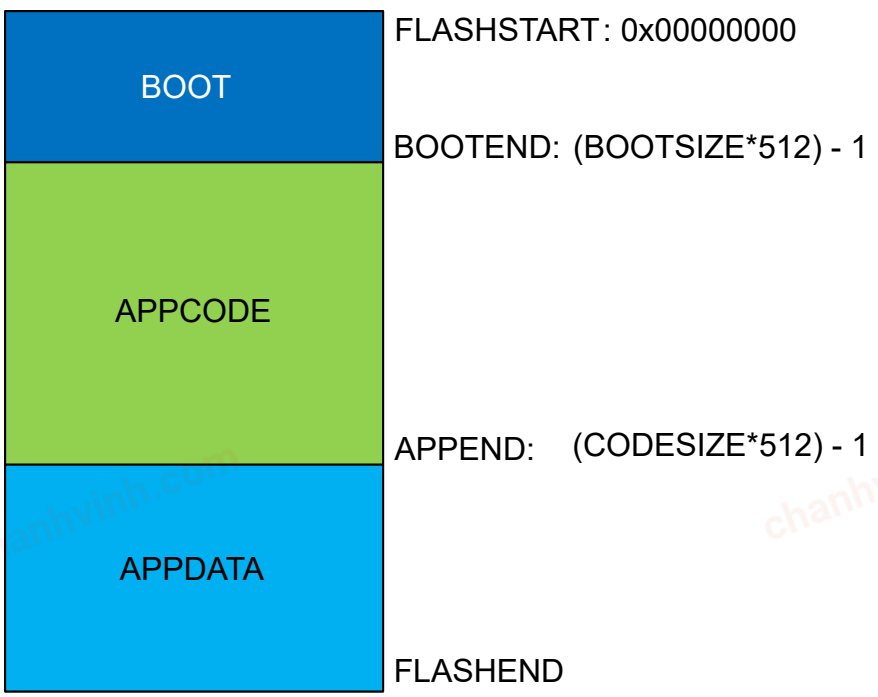

If FUSE.BOOTSIZE is written to '0', the entire Flash is regarded as the BOOT section. If FUSE.CODESIZE is written to '0' and FUSE.BOOTSIZE > 0, the APPCODE section runs from BOOTEND to the end of Flash (no APPDATA section).

chanhvinh.com

When FUSE.CODESIZE ≤ FUSE.BOOTSIZE, the APPCODE section is removed, and the APPDATA runs from BOOTEND to the end of Flash.

Table 10-2. Setting Up Flash Sections

BOOTSIZE	CODESIZE	BOOT Section	APPCODE Section	APPDATA Section
0	-	0 to FLASHEND	-	-
> 0	0	0 to BOOTEND	BOOTEND to FLASHEND	-
> 0	≤ BOOTSIZE	0 to BOOTEND	-	BOOTEND to FLASHEND
> 0	> BOOTSIZE	0 to BOOTEND	BOOTEND to APPEND	APPEND to FLASHEND

If there is no boot loader software, it is recommended to use the BOOT section for application code.

Notes:

1. After Reset, the default vector table location is at the start of the APPCODE section. The peripheral interrupts can be used in the code running in the BOOT section by relocating the interrupt vector table at the start of this section. That is done by setting the IVSEL bit in the CPUINT.CTRLA register. Refer to the *CPUINT* section for details.
2. If BOOTEND/APPEND, as resulted from BOOTSIZE/CODESIZE fuse setting, exceed the device FLASHEND, the corresponding fuse setting is ignored, and the default value is used. Refer to “Fuse” in the *Memories* section for default values.

Example 10-1. Size of Flash Sections Example

If FUSE.BOOTSIZE is written to `0x04` and FUSE.CODESIZE is written to `0x08`, the first 4*512 bytes will be BOOT, the next 4*512 bytes will be APPCODE, and the remaining Flash will be APPDATA.

Flash Protection

Additional to the inter-section write protection, the NVMCTRL provides a security mechanism to avoid unwanted access to the Flash memory sections. Even if the CPU can never write to the BOOT section, a Boot Section Read Protection (BOOTRP) bit in the Control B (NVMCTRL.CTRLB) register is provided to prevent the read and execution of code from the BOOT section. This bit can be set only from the code executed in the BOOT section and has effect only when leaving the BOOT section.

There are two other write protection (APPCODEWP and APPDATAWP) bits in the Control B (NVMCTRL.CTRLB) register that can be set to prevent further updates of the respective Application Code and Application Data sections.

10.3.1.2 EEPROM

The EEPROM is a 512 bytes nonvolatile memory section that has byte granularity on erase/write. It can be erased in blocks of 1/2/4/8/16/32 bytes, but writes are done only one byte at a time. It also has an option to do a byte erase and write in one operation.

10.3.1.3 Signature Row

The Signature Row contains a device ID that identifies each microcontroller device type and a serial number for each manufactured device. The serial number consists of the production lot number, wafer number, and wafer coordinates for the device. The Signature Row cannot be written or erased, but it can be read by the CPU or through the UPDI interface.

10.3.1.4 User Row

The User Row is 32 bytes. This section can be used to store various data, such as calibration/configuration data and serial numbers. This section is not erased by a chip erase.

The User Row section can be read or written from the CPU. This section can be read from UPDI on a device unlocked and can be written through UPDI even on a device locked.

© 2021 Microchip Technology Inc.
and its subsidiaries

chanhvinh.com

10.3.1.5 Fuses

The fuses contain device configuration values and are copied to their respective target registers at the end of the start-up sequence.

The fuses can be read by the CPU or the UPDI but can only be programmed or cleared by the UPDI.

10.3.2 Memory Access

For read/write operations, the Flash memory can be accessed either from the code space or from the CPU data space. When the code space is used, the Flash is accessible through the `LPM` and `SPM` instructions.

Additionally, the Flash memory is byte accessible when accessed through the CPU data space. This means that it shares the same address space and instructions as SRAM, EEPROM, and I/O registers and is accessible using `LD/ST` instructions in assembly.

For the `LPM` and `SPM` instructions, address 0x0000 is the start of the Flash, but for `LD` and `ST`, it is 0x8000, as shown in the *Memory map* section.

Addressing Flash Memory in Code Space

For read and write access to the Flash memory in the code space, the RAMPZ register is concatenated with the Z register to create the Address Pointer used for `LPM`/`SPM` access.

Figure 10-3. Flash Addressing for Self-Programming

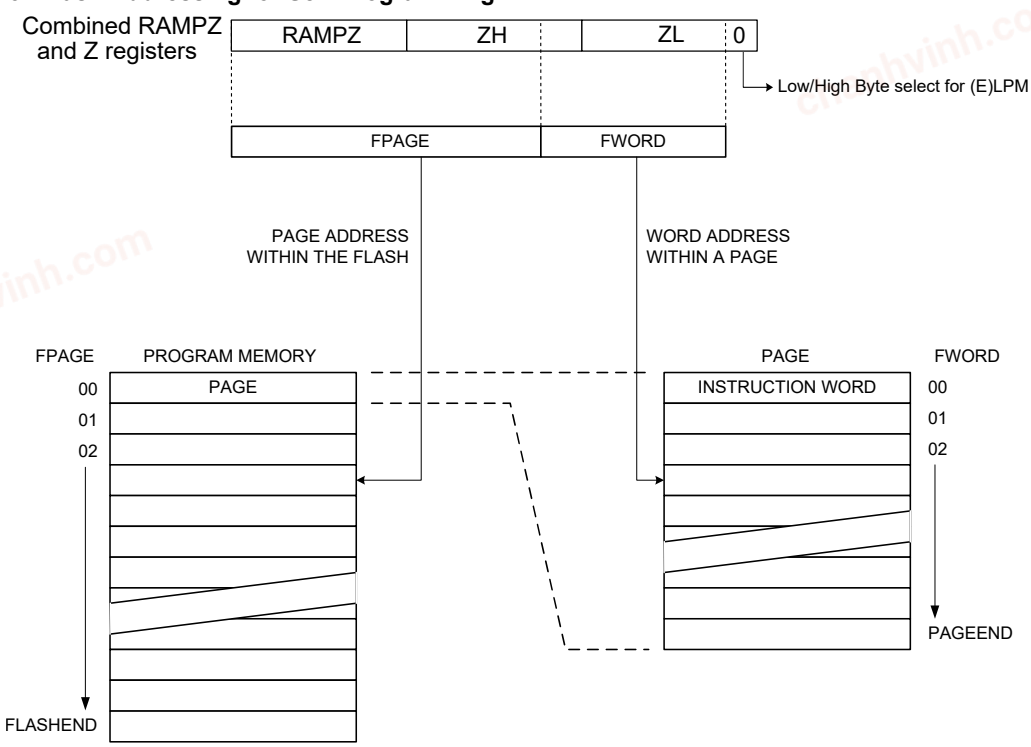

The Flash is word-accessed and organized in pages, so the Address Pointer can be treated as having two sections, as shown in Figure 10-3. The word address in the page (FWORD) is held by the Least Significant bits in the Address Pointer, while the Most Significant bits in the Address Pointer hold the Flash page address (FPAGE). Together, FWORD and FPAGE hold an absolute address to a word in the Flash.

The Flash is word-accessed for code space write operations, so the Least Significant bit (bit 0) in the Address Pointer is ignored.

For Flash read operations, one byte is read at a time. For this, the Least Significant bit (bit 0) in the Address Pointer is used to select the low byte or high byte in the word address. If this bit is '`0`', the low byte is read, and if this bit is '`1`', the high byte is read.

Once a programming operation is initiated, the address is latched, and the Address Pointer can be updated and used for other operations.

chanhvinh.com

Addressing Flash in CPU Data Space

The Flash area in data space has only 32 KB. For devices with Flash memory size greater than 32 KB, the Flash memory is divided into blocks of 32 KB. Those blocks are mapped into data space using the FLMAP bit field of the NVMCTRL.CTRLB register.

For read and write access to the Flash memory in the CPU data space, the LD/ST instructions are used to access one byte at a time.

10.3.2.1 Read

Reading the Flash is done using Load Program Memory (LPM) instructions or Load (LD*) type instructions with an address according to the memory map. Reading the EEPROM and Signature Row is done using LD* instructions. Performing a read operation while a write or erase is in progress will result in a bus wait, and the instruction will be suspended until the ongoing operation is complete.

10.3.2.2 Programming

The Flash programming is done by writing one byte or one word at a time. Writing from the CPU using store type instructions (ST*) will write one byte at a time, while a write with the Store Program Memory (SPM) instruction will write one word at a time.

The NVMCTRL command set supports multiple Flash erase operations. Up to 32 pages can be erased at the same time. The duration of the erase operation is independent of the number of pages being erased.

The EEPROM erasing has byte granularity with the possibility of erasing up to 32 bytes in one operation. The EEPROM is written one byte at a time, and it has an option to do the erase and write of one byte in the same operation.

The User Row is erased/written as a normal Flash. When the erasing operation is used, the entire User Row is erased at once. The User Row writing has byte granularity.

The Fuse programming is identical to the EEPROM programming, but it can be performed only via the UPDI interface.

Table 10-3. Programming Granularity

Memory Section	Erase Granularity	Write Granularity
Flash array	Page	Word(1)
EEPROM array	Byte	Byte
User Row	Page(2)	Byte(3)
Fuses	Byte	Byte

Notes:

1. Byte granularity when writing to the CPU data space memory mapped section.
2. One page is 32 bytes.
3. Page granularity when programming from UPDI on a locked device.

10.3.2.3 Command Modes

Reading of the memory arrays is handled using the LD*/LPM(1) instructions.

The erase of the whole Flash (CHER) or the EEPROM (EECHER) is started by writing commands to the NVMCTRL.CTRLA register. The other write/erase operations are just enabled by writing commands to the NVMCTRL.CTRLA register and must be followed by writes using ST*/SPM(1) instructions to the memory arrays.

Note:

1. LPM/SPM cannot be used for EEPROM.

To write a command in the NVMCTRL.CTRLA register, the following sequence needs to be executed:

1. Confirm that any previous operation is completed by reading the Busy (EEBUSY and FBUSY) flags in the NVMCTRL.STATUS register.

chanhvinh.com

2. Write the appropriate key to the Configuration Change Protection (CPU.CCP) register to unlock the NVM Control A (NVMCTRL.CTRLA) register.
3. Write the desired command value to the CMD bit field in the Control A (NVMCTRL.CTRLA) register within the next four instructions.

To perform a write/erase operation in the NVM, the following steps are required:

1. Confirm that any previous operation is completed by reading the Busy (EEBUSY and FBUSY) flags in the NVMCTRL.STATUS register.
2. Optional: If the Flash is accessed in the CPU data space, map the corresponding 32 KB Flash section into the data space by writing the FLMAP bit field in the NVMCTRL.CTRLB register.
3. Write the desired command value to the NVMCTRL.CTRLA register as described before.
4. Write to the correct address in the data space/code space using the `ST*`/`SPM` instructions.
5. Optional: If multiple write operations are required, go to step 4.
6. Write a `NOOP` or `NOCMD` command to the NVMCTRL.CTRLA register to clear the current command.

10.3.2.3.1 Flash Write Mode

The Flash Write (FLWR) mode of the Flash controller enables writes to the Flash array to start a programming operation. Several writes can be done while the FLWR mode is enabled in the NVMCTRL.CTRLA register. When the FLWR mode is enabled, the `ST*` instructions write one byte at a time, while the `SPM` instruction writes one word at a time.

Before a write is performed to an address, its content needs to be erased.

10.3.2.3.2 Flash Page Erase Mode

The Flash Page Erase (FLPER) mode will allow each write to the memory array to erase a page.

An erase operation to the Flash will halt the CPU.

10.3.2.3.3 Flash Multi-Page Erase Mode

The Multi-Page Erase (FLMPERn) mode will allow each write to the memory array to erase multiple pages. When enabling FLMPERn, it is possible to select between erasing 2, 4, 8, 16, or 32 pages.

The LSbs of the page address are ignored when defining which Flash pages are erased. Using FLMPER4 as an example, erasing any page in the 0x08 - 0x0B range will cause the erase of all pages in the range.

Table 10-4. Flash Multi-Page Erase

CMD	Pages Erased	Description
FLMPER2	2	Pages matching FPAGE[N:1] are erased. The value in FPAGE[0] is ignored.
FLMPER4	4	Pages matching FPAGE[N:2] are erased. The value in FPAGE[1:0] is ignored.
FLMPER8	8	Pages matching FPAGE[N:3] are erased. The value in FPAGE[2:0] is ignored.
FLMPER16	16	Pages matching FPAGE[N:4] are erased. The value in FPAGE[3:0] is ignored.
FLMPER32	32	Pages matching FPAGE[N:5] are erased. The value in FPAGE[4:0] is ignored.

Note: FPAGE is the page number when doing a Flash erase. Refer to Figure 10-3 for details.

10.3.2.3.4 EEPROM Write Mode

The EEPROM Write (EEWR) mode enables the EEPROM array for writing operations. Several writes can be done while the EEWR mode is enabled in the NVMCTRL.CTRLA register. When the EEWR mode is enabled, writes with the `ST*` instructions will be performed one byte at a time.

When writing the EEPROM, the CPU will continue executing code. If a new load/store operation is started before the EEPROM erase/write is completed, the CPU will be halted.

Before a write is performed to an address, its content needs to be erased.

10.3.2.3.5 EEPROM Erase/Write Mode

The EEPROM Erase/Write (EEERWR) mode enables the EEPROM array for the erase operation directly followed by a write operation. Several erase/writes can be done while the EEERWR mode is enabled in the NVMCTRL.CTRLA register. When the EEERWR mode is enabled, writes with the `ST*` instructions are performed one byte at a time.

© 2021 Microchip Technology Inc. and its subsidiaries

chanhvinh.com

When writing/erasing the EEPROM, the CPU will continue executing code.

If a new load or store instruction is started before the erase/write is completed, the CPU will be halted.

10.3.2.3.6 EEPROM Byte Erase Mode

The EEPROM Byte Erase (EEBER) mode will allow each write to the memory array to erase the selected byte. An erased byte always reads back 0xFF, regardless of the value written to the EEPROM address.

When erasing the EEPROM, the CPU can continue to run from the Flash. If the CPU starts an erase or write operation while the EEPROM is busy, the CPU will be halted until the previous operation is finished.

10.3.2.3.7 EEPROM Multi-Byte Erase Mode

The EEPROM Multi-Byte Erase (EEMBERn) mode allows erasing several bytes in one operation. When enabling the EEMBERn mode, it is possible to select between erasing 2, 4, 8, 16, or 32 bytes in one operation.

The LSbs of the address are ignored when defining which EEPROM locations are erased. For example, while doing an 8-byte erase, addressing any byte in the 0x18 - 0x1F range will result in erasing the entire range of bytes.

Table 10-5. EEPROM Multi-Byte Erase

CMD	Bytes Erased	Description(1)
EEMBER2	2	Addresses matching ADDR[N:1] are erased. The value in ADDR[0] is ignored.
EEMBER4	4	Addresses matching ADDR[N:2] are erased. The value in ADDR[1:0] is ignored.
EEMBER8	8	Addresses matching ADDR[N:3] are erased. The value in ADDR[2:0] is ignored.
EEMBER16	16	Addresses matching ADDR[N:4] are erased. The value in ADDR[3:0] is ignored.
EEMBER32	32	Addresses matching ADDR[N:5] are erased. The value in ADDR[4:0] is ignored.

Note: ADDR is the address written when doing an EEPROM erase.

When erasing the EEPROM, the CPU can continue to execute instructions from the Flash. If the CPU starts an erase or write operation while the EEPROM is busy, the NVMCTRL module will give a wait on the bus, and the CPU will be halted until the current operation is finished.

10.3.2.3.8 Chip Erase Command

The Chip Erase (CHER) command erases the Flash and the EEPROM. The EEPROM is unaltered if the EEPROM Save During Chip Erase (EESAVE) fuse in FUSE.SYSCFG0 is set.

If the device is locked, the EEPROM is always erased by a chip erase regardless of the EESAVE bit. The read/write protection (BOOTRP, APPCODEWP, APPDATAWP) bits in NVMCTRL.CTRLB do not prevent the operation. All Flash and EEPROM bytes will read back 0xFF after this command.

This command can only be started from the UPDI.

10.3.2.3.9 EEPROM Erase Command

The EEPROM Erase (EECHER) command erases the EEPROM. All EEPROM bytes will read back 0xFF after the operation. The CPU is halted during the EEPROM erase.

10.3.3 Preventing Flash/EEPROM Corruption

A Flash/EEPROM write or erase can cause memory corruption if the supply voltage is too low for the CPU and the Flash/EEPROM to operate correctly. These issues are the same on-board level systems using Flash/EEPROM, and it is recommended to use the internal or an external Brown-out Detector (BOD) to ensure that the device is not operating at too low voltage.

When the voltage is too low, a Flash/EEPROM corruption may be caused by two circumstances:

1. A regular write sequence to the Flash, which requires a minimum voltage to operate correctly.
2. The CPU itself can execute instructions incorrectly when the supply voltage is too low.

The chip erase does not clear fuses. If the BOD is enabled by fuses before starting the Chip Erase command, it is automatically enabled at its previous configured level during the chip erase.

Refer to the *Electrical Characteristics* section for Maximum Frequency vs. V_{DD}.

© 2021 Microchip Technology Inc.
and its subsidiaries

chanhvinh.com

Attention: Flash/EEPROM corruption can be avoided by taking the following measures:

1. Keep the device in Reset during periods of an insufficient power supply voltage. Do this by enabling the internal BOD.
2. The Voltage Level Monitor (VLM) in the BOD can be used to prevent starting a write to the EEPROM close to the BOD level.
3. If the detection levels of the internal BOD do not match the required detection level, an external V_{DD} Reset protection circuit can be used. If a Reset occurs while a write operation is ongoing, the write operation will be aborted.

10.3.4 Interrupts

Table 10-6. Available Interrupt Vectors and Sources

Name	Vector Description	Conditions
EEREADY	NVM	The EEPROM is ready for new write/erase operations.

When an interrupt condition occurs, the corresponding interrupt flag is set in the Interrupt Flags (NVMCTRL.INTFLAGS) register.

An interrupt source is enabled or disabled by writing to the corresponding bit in the Interrupt Control (NVMCTRL.INTCTRL) register.

An interrupt request is generated when the corresponding interrupt source is enabled, and the interrupt flag is set. The interrupt request remains active until the interrupt flag is cleared. See the NVMCTRL.INTFLAGS register for details on how to clear interrupt flags.

10.3.5 Sleep Mode Operation

If there is no ongoing EEPROM write/erase operation, the NVMCTRL will enter sleep mode, when the system enters sleep mode.

If an EEPROM write/erase operation is ongoing when the system enters a sleep mode, the NVM block, the NVMCTRL and the peripheral clock will remain ON until the operation is finished and will be automatically turned off once the operation is completed. This is valid for all sleep modes, including Power-Down.

The EEPROM Ready interrupt will wake up the device only from Idle sleep mode.

10.3.6 Configuration Change Protection

This peripheral has registers that are under Configuration Change Protection (CCP). To write to these registers, a certain key must first be written to the CPU.CCP register, followed by a write access to the protected bits within four CPU instructions.

Attempting to write to a protected register without following the appropriate CCP unlock sequence leaves the protected register unchanged.

The following registers are under CCP:

Table 10-7. NVMCTRL - Registers under Configuration Change Protection

Register	Key
NVMCTRL.CTRLA	SPM
NVMCTRL.CTRLB	IOREG

chanhvinh.com

10.4 Register Summary

Offset	Name	Bit Pos.	7	6	5	4	3	2	1	0
0x00	CTRLA	7:0		CMD[6:0]						
0x01	CTRLB	7:0	FLMAPLOCK		FLMAP[1:0]			APPDATAWP	BOOTRP	APPCODEWP
0x02	STATUS	7:0		ERROR[2:0]					EEBUSY	FBUSY
0x03	INTCTRL	7:0								EEREADY
0x04	INTFLAGS	7:0								EEREADY
0x05	Reserved									
0x06	DATA	7:0	DATA[7:0]							
		15:8	DATA[15:8]							
0x08	ADDR	7:0	ADDR[7:0]							
		15:8	ADDR[15:8]							
		23:16	ADDR[23:16]							

10.5 Register Description

© 2021 Microchip Technology Inc.
and its subsidiaries

chanhvinh.com

10.5.1 Control A

Name: CTRLA
Offset: 0x00
Reset: 0x00
Property: Configuration Change Protection

Bit	7	6	5	4	3	2	1	0
		CMD[6:0]						
Access		R/W	R/W	R/W	R/W	R/W	R/W	R/W
Reset		0	0	0	0	0	0	0

Bits 6:0 – CMD[6:0] Command
Write this bit field to enable or issue a command. The Chip Erase and EEPROM Erase commands are started when the command is written. The others enable an erase or write operation. The operation is started by doing a store instruction to an address location.
A change from one command to another must always go through No command (NOCMD) or No operation (NOOP) command to avoid the Command Collision error being set in the ERROR bit field from the NVMCTRL.STATUS register.

Value	Name	Description
0x00	NOCMD	No command
0x01	NOOP	No operation
0x02	FLWR	Flash Write Enable
0x08	FLPER	Flash Page Erase Enable
0x09	FLMPER2	Flash 2-page Erase Enable
0x0A	FLMPER4	Flash 4-page Erase Enable
0x0B	FLMPER8	Flash 8-page Erase Enable
0x0C	FLMPER16	Flash 16-page Erase Enable
0x0D	FLMPER32	Flash 32-page Erase Enable
0x12	EEWR	EEPROM Write Enable
0x13	EEERWR	EEPROM Erase and Write Enable
0x18	EEBER	EEPROM Byte Erase Enable
0x19	EEMBER2	EEPROM 2-byte Erase Enable
0x1A	EEMBER4	EEPROM 4-byte Erase Enable
0x1B	EEMBER8	EEPROM 8-byte Erase Enable
0x1C	EEMBER16	EEPROM 16-byte Erase Enable
0x1D	EEMBER32	EEPROM 32-byte Erase Enable
0x20	CHER	Erase Flash and EEPROM. EEPROM is skipped if EESAVE fuse is set. (UPDI access only.)
0x30	EECHER	Erase EEPROM
Other	-	Reserved

© 2021 Microchip Technology Inc. and its subsidiaries

chanhvinh.com

10.5.2 Control B

Name: CTRLB
Offset: 0x01
Reset: 0x30
Property: Configuration Change Protection

Bit	7	6	5	4	3	2	1	0
	FLMAPLOCK		FLMAP[1:0]			APPDATAWP	BOOTRP	APPCODEWP
Access	R/W		R/W	R/W		R/W	R/W	R/W
Reset	0		1	1		0	0	0

Bit 7 – FLMAPLOCK Flash Mapping Lock
Setting this bit to '1' prevents further updates of FLMAP[1:0]. This bit can only be cleared by a Reset.

Bits 5:4 – FLMAP[1:0] Flash Section Mapped into Data Space
Select what part (in blocks of 32 KB) of the Flash will be mapped as part of the CPU data space and will be accessible through LD/ST instructions.
This bit field is not under Configuration Change Protection.

Value	Name	Mapped Flash Section [KB]		
		32 KB Flash	64 KB Flash	128 KB Flash
0x00	SECTION0	0-32	0-32	0-32
0x01	SECTION1		32-64	32-64
0x02	SECTION2		0-32	64-96
0x03	SECTION3		32-64	96-12

Bit 2 – APPDATAWP Application Data Section Write Protection
Writing this bit to '1' prevents further updates to the Application Data section. This bit can only be cleared by a Reset.

Bit 1 – BOOTRP Boot Section Read Protection
Writing this bit to '1' will protect the BOOT section from reading and instruction fetching. If a read is issued from the other Flash sections, it will return '0'. An instruction fetch from the BOOT section will return a NOP instruction. This bit can only be written from the BOOT section, and it can only be cleared by a Reset. The read protection will only take effect when leaving the BOOT section after the bit is written.

Bit 0 – APPCODEWP Application Code Section Write Protection
Writing this bit to '1' prevents further updates to the Application Code section. This bit can only be cleared by a Reset.

chanhvinh.com

10.5.3 Status

Name: STATUS
Offset: 0x02
Reset: 0x00
Property: -

Bit	7	6	5	4	3	2	1	0
		ERROR[2:0]					EEBUSY	FBUSY
Access		R/W	R/W	R/W			R	R
Reset		0	0	0			0	0

Bits 6:4 – ERROR[2:0] Error Code
The Error Code bit field will show the last error occurring. This bit field can be cleared by writing it to '0'.

Value	Name	Description
0x0	NONE	No error
0x1	INVALIDCMD	The selected command is not supported
0x2	WRITEPROTECT	Attempt to write a section that is protected
0x3	CMDCOLLISION	A new write/erase command was selected while a write/erase command is already ongoing
Other	—	Reserved

Bit 1 – EEBUSY EEPROM Busy
This bit will read '1' when an EEPROM programming operation is ongoing.

Bit 0 – FBUSY Flash Busy
This bit will read '1' when a Flash programming operation is ongoing.

chanhvinh.com

10.5.4 Interrupt Control

Name: INTCTRL
Offset: 0x03
Reset: 0x00
Property: -

Bit	7	6	5	4	3	2	1	0
								EEREADY
Access								R/W
Reset								0

Bit 0 – EEREADY EEPROM Ready Interrupt
Writing a '1' to this bit enables the interrupt which indicates that the EEPROM is ready for new write/erase operations. This is a level interrupt that will be triggered only when the EEREADY bit in the INTFLAGS register is set to '1'. The interrupt must not be enabled before triggering an EEPROM write/erase operation, as the EEREADY bit will not be cleared before this command is issued. The interrupt must be disabled in the interrupt handler.

chanhvinh.com

10.5.5 Interrupt Flags

Name: INTFLAGS
Offset: 0x04
Reset: 0x00
Property: -

Bit	7	6	5	4	3	2	1	0
								EEREADY
Access								R/W
Reset								0

Bit 0 – EEREADY EEREADY Interrupt Flag
This flag is set continuously as long as the EEPROM is not busy. This flag is cleared by writing a '1' to it.

chanhvinh.com

10.5.6 Data

Name: DATA
Offset: 0x06
Reset: 0x00
Property: -

The NVMCTRL.DATAL and NVMCTRL.DATAH register pair represents the 16-bit value, NVMCTRL.DATA.

The low byte [7:0] (suffix L) is accessible at the original offset.

The high byte [15:8] (suffix H) can be accessed at offset + `0x01`.

Bit	15	14	13	12	11	10	9	8
	DATA[15:8]							
Access	R/W	R/W	R/W	R/W	R/W	R/W	R/W	R/W
Reset	0	0	0	0	0	0	0	0

Bit	7	6	5	4	3	2	1	0
	DATA[7:0]							
Access	R/W	R/W	R/W	R/W	R/W	R/W	R/W	R/W
Reset	0	0	0	0	0	0	0	0

Bits 15:0 – DATA[15:0] Data Register
The Data register will contain the last read value from Flash, EEPROM, or NVMCTRL. For EEPROM access, only DATA[7:0] is used.

chanhvinh.com

10.5.7 Address

Name: ADDR
Offset: 0x08
Reset: 0x00
Property: -

NVMCTRL.ADDR0, NVMCTRL.ADDR1 and NVMCTRL.ADDR2 represent the 24-bit value NVMCTRL.ADDR.

The low byte [7:0] (suffix 0) is accessible at the original offset.

The high byte [15:8] (suffix 1) can be accessed at offset +`0x01`.

The extended byte [23:16] (suffix 2) can be accessed at offset +`0x02`.

Bit	23	22	21	20	19	18	17	16
	ADDR[23:16]							
Access	R/W	R/W	R/W	R/W	R/W	R/W	R/W	R/W
Reset	0	0	0	0	0	0	0	0

Bit	15	14	13	12	11	10	9	8
	ADDR[15:8]							
Access	R/W	R/W	R/W	R/W	R/W	R/W	R/W	R/W
Reset	0	0	0	0	0	0	0	0

Bit	7	6	5	4	3	2	1	0
	ADDR[7:0]							
Access	R/W	R/W	R/W	R/W	R/W	R/W	R/W	R/W
Reset	0	0	0	0	0	0	0	0

Bits 23:0 – ADDR[23:0] Address
The Address register contains the address of the last memory location that has been accessed. Only the number of bits required to access the memory is used.

chanhvinh.com

11. CLKCTRL - Clock Controller

11.1 Features

- All Clocks and Clock Sources Are Automatically Enabled When Requested by Peripherals
- Internal Oscillators:
  - Internal high-frequency oscillator (OSCHF): Up to 24 MHz
  - 32.768 kHz ultra low-power oscillator (OSC32K)
  - Up to 48 MHz PLL; clock multiplication by 2x or 3x
- Auto-Tuning for Improved Internal Oscillator Accuracy
- External Clock Options:
  - 32.768 kHz Crystal Oscillator (XOSC32K)
  - External clock
- Main Clock Features:
  - Safe run-time switching
  - Prescaler with a division factor ranging from 1 to 64

11.2 Overview

The Clock Controller (CLKCTRL) controls, distributes and prescales the clock signals from the available oscillators and supports internal and external clock sources.

The CLKCTRL is based on an automatic clock request system implemented in all peripherals on the device. The peripherals will automatically request the clocks needed. The request is routed to the correct clock source if multiple clock sources are available.

The Main Clock (CLK_MAIN) is used by the CPU, RAM, and all peripherals connected to the I/O bus. The main clock source can be selected and prescaled. Some peripherals can share the same clock source as the main clock or run asynchronously to the main clock domain.

© 2021 Microchip Technology Inc.
and its subsidiaries

chanhvinh.com

11.2.1 Block Diagram - CLKCTRL

Figure 11-1. CLKCTRL Block Diagram

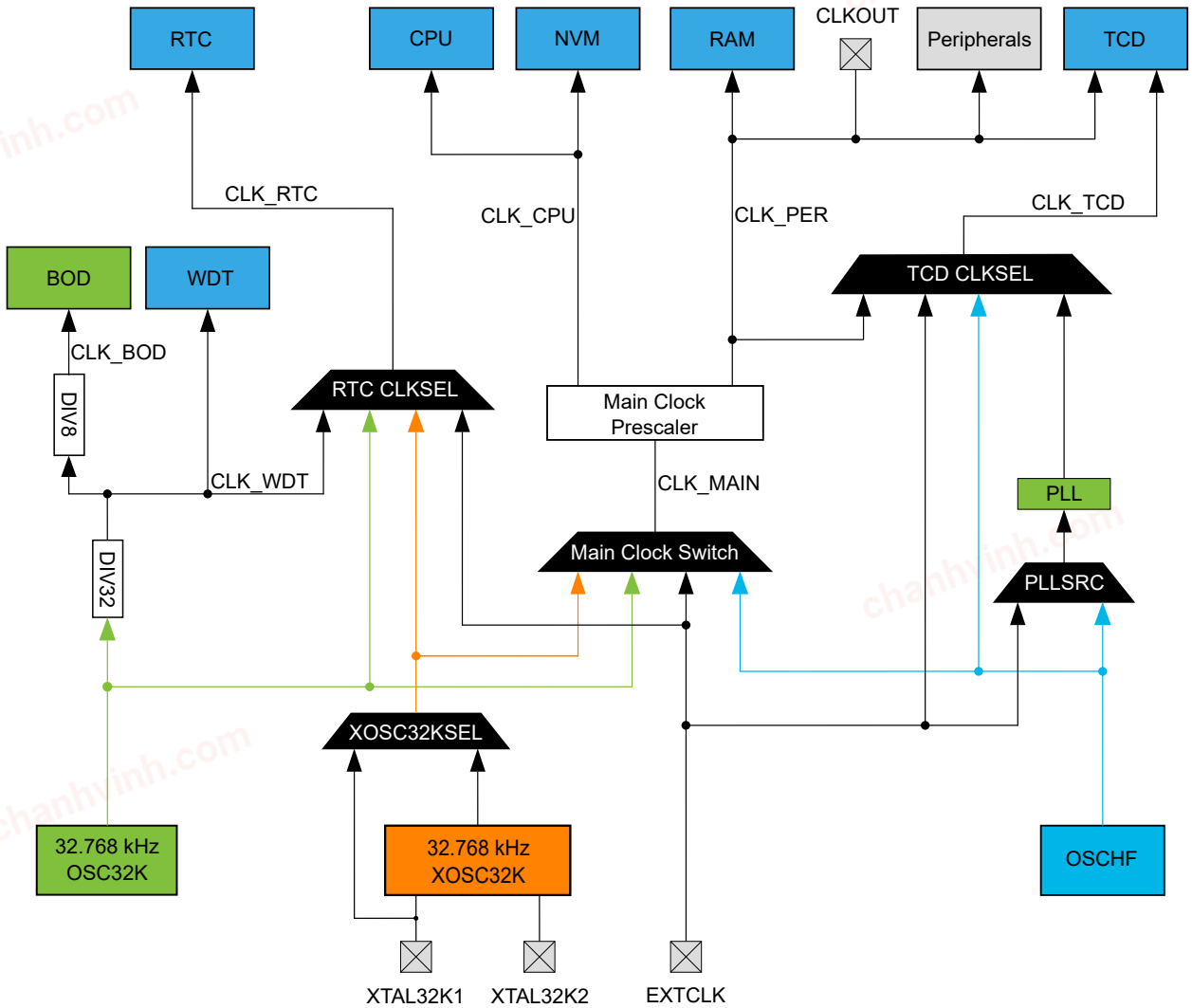

The clock system consists of the main clock and clocks derived from the main clock, as well as several asynchronous clocks:

- Main Clock
  CLK_MAIN is always running in Active and Idle sleep modes, and in Standby sleep mode if requested.
  CLK_MAIN is prescaled and distributed by the clock controller:
  - CLK_CPU is used by the CPU and the NVMCTRL
  - CLK_PER is used by SRAM and all peripherals that are not listed under asynchronous clocks and can also be routed to the CLKOUT pin
  - All the clock sources can be used as the main clock
- Clocks running asynchronously to the main clock domain:
  - CLK_RTC is used by the Real-Time Counter (RTC) and the Periodic Interrupt Timer (PIT). It will be requested when the RTC/PIT is enabled. The clock source for CLK_RTC may be changed only if the peripheral is disabled.
  - CLK_WDT is used by the Watchdog Timer (WDT). It will be requested when the WDT is enabled.
  - CLK_BOD is used by the Brown-out Detector (BOD). It will be requested when the BOD is enabled in the Sampled mode. The alternative clock source is controlled by a fuse.
  - CLK_TCD is used by the Timer Counter type D (TCD). It will be requested when the TCD is enabled. The clock source may be changed only if the peripheral is disabled.

© 2021 Microchip Technology Inc. and its subsidiaries

chanhvinh.com

The clock source for the main clock domain is configured by writing to the Clock Select (CLKSEL) bit field in the Main Clock Control A (CLKCTRL.MCLKCTRLA) register. This register has Configuration Change Protection (CCP), and the appropriate key must be written to the CCP register before writing to the CLKSEL bit field. The asynchronous clock sources are configured by the registers in the respective peripheral.

11.2.2 Signal Description

Signal	Type	Description
CLKOUT	Digital output	CLK_PER output

For more details, refer to the *I/O Multiplexing* section.

11.3 Functional Description

11.3.1 Main Clock Selection and Prescaler

All internal oscillators and the EXTCLK can be used as the main clock source for CLK_MAIN. The main clock source is selectable from software and can be safely changed during normal operation.

The Configuration Change Protection mechanism prevents unsafe clock switching.

Upon the selection of an external clock source, a switch to the chosen clock source will occur only if edges are detected. Until a sufficient number of clock edges are detected, the switch will not occur, and it will not be possible to change to another clock source again without executing a Reset.

An ongoing clock source switch is indicated by the Main Clock Oscillator Changing (SOSC) bit in the Main Clock Status (CLKCTRL.MCLKSTATUS) register. The stability of the external clock sources is indicated by the respective Status (EXTS and XOSC32KS) bits in CLKCTRL.MCLKSTATUS.

⚠ CAUTION If an external clock source fails while used as the CLK_MAIN source, only the WDT can provide a System Reset.

The CLK_MAIN is fed into the prescaler before being used by the peripherals (CLK_PER) in the device. The prescaler divides CLK_MAIN by a factor from 1 to 64.

Figure 11-2. Main Clock and Prescaler

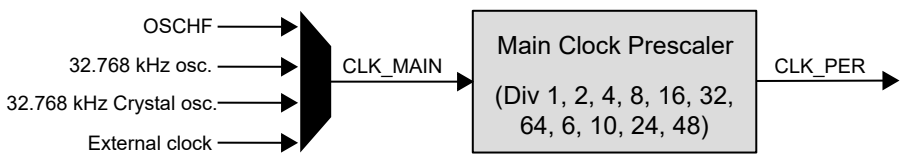

11.3.2 Main Clock After Reset

After any Reset, the Main Clock (CLK_MAIN) is provided either by the OSCHF, running at the default frequency of 4 MHz, or the OSC32K, depending on the Clock Select (CLKSEL) bit field configuration of the Oscillator Configuration (FUSE.OSCCFG) fuse. Refer to the description of the FUSE.OSCCFG fuse for details of the possible frequencies after Reset.

11.3.3 Clock Sources

The clock sources are divided into two main groups: Internal oscillators and external clock sources. All the internal clock sources are automatically enabled when they are requested by a peripheral.

The crystal oscillator must be enabled by writing a '1' to the ENABLE bit in the 32.768 kHz Crystal Oscillator Control A (CLKCTRL.XOSC32KCTRLA) register before it can serve as a clock source.

After Reset, the device starts running from the internal high-frequency oscillator or the internal 32.768 kHz oscillator.

chanhvinh.com

The respective Oscillator Status bits in the Main Clock Status (CLKCTRL.MCLKSTATUS) register indicate if the clock source is running and stable.

11.3.3.1 Internal Oscillators

The internal oscillators do not require any external components to run. Refer to the *Electrical Characteristics* section for accuracy and electrical specifications.

11.3.3.1.1 Internal High-Frequency Oscillator (OSCHF)

The OSCHF supports output frequencies of 1, 2, 3, 4 MHz, and multiples of 4, up to 24 MHz, which can be used as the main clock, peripheral clock, or as input to the Phase-Locked Loop (PLL).

11.3.3.1.2 32.768 kHz Oscillator (OSC32K)

The 32.768 kHz oscillator is optimized for Ultra-Low Power (ULP) operation. Power consumption is decreased at the cost of decreased accuracy compared to an external crystal oscillator.

This oscillator provides a 1.024 kHz or 32.768 kHz clock for the Real-Time Counter (RTC), the Watchdog Timer (WDT), and the Brown-out Detector (BOD). Additionally, this oscillator can also provide a 32.768 kHz clock to the Main Clock (CLK_MAIN).

For the start-up time of this oscillator, refer to the *Electrical Characteristics* section.

11.3.3.2 External Clock Sources

These external clock sources are available:

- External clock from a pin (EXTCLK)
- The XTAL32K1 and XTAL32K2 pins are dedicated to driving a 32.768 kHz crystal oscillator (XOSC32K)
- Instead of a crystal oscillator, XTAL32K1 can be configured to accept an external clock source

11.3.3.2.1 32.768 kHz Crystal Oscillator (XOSC32K)

This oscillator supports two input options:

- A crystal is connected to the XTAL32K1 and XTAL32K2 pins
- An external clock running at 32.768 kHz, connected to XTAL32K1

Configure the input option by writing the Source Select (SEL) bit in the XOSC32K Control A (CLKCTRL.XOSC32KCTRLA) register.

The XOSC32K is enabled by writing a '1' to the ENABLE bit in CLKCTRL.XOSC32KCTRLA. When enabled, the configuration of the general purpose input/output (GPIO) pins used by the XOSC32K is overridden as XTAL32K1 and XTAL32K2 pins. The oscillator needs to be enabled to start running when requested.

The start-up time of a given crystal oscillator can be accommodated by writing to the Crystal Start-Up Time (CSUT) bit field in XOSC32KCTRLA.

When XOSC32K is configured to use an external clock on XTAL32K1, the start-up time is fixed to two cycles.

11.3.3.2.2 External Clock (EXTCLK)

The EXTCLK is taken directly from the pin. This GPIO pin is automatically configured for the EXTCLK if any peripheral requests this clock.

The maximum input frequency for the EXTCLK is 24 MHz.

This clock source has a start-up time of two cycles when first requested.

11.3.4 Phase-Locked Loop (PLL)

The PLL can be used to increase the frequency of the clock source defined by the SOURCE bit in the CLKCTRL.PLLCTRLA register. The PLL provides clock multiplication by 2x or 3x, and it can be used only when the reference clock (EXTCLK or OSCHF) is at least 16 MHz.

The PLL can run in Active, Idle and Standby sleep modes and can serve as an input clock for TCD.

The maximum frequency generated using the PLL is 48 MHz.

Initialization:

1. Enable the clock source to be used as input.
2. Configure the SOURCE bit in the CLKCTRL.PLLCTRLA register to the desired clock source.

chanhvinh.com

3. Enable the PLL by writing the desired multiplication factor to the MULFAC bit field in CLKCTRL.PLLCTRLA.
4. Wait for the PLL Status (PLLS) bit in the CLKCTRL.MCLKSTATUS register to become '1', indicating that the PLL has locked in on the desired frequency.

For available connections, refer to 11.2.1 Block Diagram - CLKCTRL.

11.3.5 Manual Tuning and Auto-Tune

Tune the output frequency of the OSCHF either manually or automatically against an external oscillator.

Manual Tuning

Tune the output frequency of the OSCHF up and down by writing the Oscillator Tune (TUNE) bit field in the Frequency Tune (TUNE) register. The Automatic Oscillator Tune (AUTOTUNE) bit field in the CTRLA register must remain zero.

Auto-Tune Against an External Crystal Oscillator

The OSCHF output frequency can be calibrated by automatic tuning against an external 32.768 kHz crystal oscillator. Enable auto-tune by selecting the external oscillator in the Automatic Oscillator Tune (AUTOTUNE) bit field in the CTRLA register. This will lock the TUNE register, and no manual tuning is possible. The TUNE register is updated with the latest TUNE value when AUTOTUNE is disabled.

Figure 11-3. OSCHF Auto-Tune Block Diagram

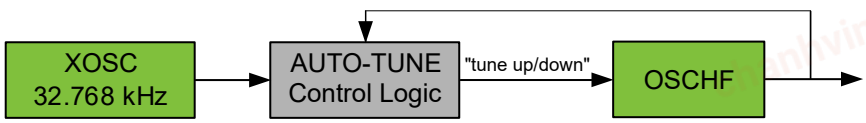

Refer to the *Electrical Characteristics* section for details.

11.3.6 Sleep Mode Operation

When a clock source is not used or requested, it will stop. It is possible to request a clock source directly by writing a '1' to the Run Standby (RUNSTDBY) bit in the respective oscillator's Control A (CLKCTRL.[osc]CTRLA) register. This will cause the oscillator to run constantly, except for Power-Down sleep mode. Additionally, when this bit is written to '1', the oscillator start-up time is eliminated when the clock source is requested by a peripheral.

The main clock will always run in Active and Idle sleep modes. In Standby sleep mode, the main clock will run only if any peripheral is requesting it, or the Run in Standby (RUNSTDBY) bit in the respective oscillator's Control A (CLKCTRL.[osc]CTRLA) register is written to '1'.

In Power-Down sleep mode, the main clock will stop after all NVM operations are completed. Refer to the *Sleep Controller* section for more details on sleep mode operation.

11.3.7 Configuration Change Protection

This peripheral has registers that are under Configuration Change Protection (CCP). To write to these registers, a certain key must first be written to the CPU.CCP register, followed by a write access to the protected bits within four CPU instructions.

Attempting to write to a protected register without following the appropriate CCP unlock sequence leaves the protected register unchanged.

The following registers are under CCP:

Table 11-1. CLKCTRL - Registers Under Configuration Change Protection

Register	Key
CLKCTRL.MCLKCTRLA	IOREG
CLKCTRL.MCLKCTRLB	IOREG
CLKCTRL.MCLKLOCK	IOREG
CLKCTRL.XOSC32KCTRLA	IOREG

chanhvinh.com

.....continued

Register	Key
CLKCTRL.OSCHFCTRLA	IOREG
CLKCTRL.OSC32KCTRLA	IOREG
CLKCTRL.PLLCTRLA	IOREG

chanhvinh.com

chanhvinh.com

11.4 Register Summary

Offset	Name	Bit Pos.	7	6	5	4	3	2	1	0
0x00	MCLKCTRLA	7:0	CLKOUT				CLKSEL[3:0]			
0x01	MCLKCTRLB	7:0				PDIV[3:0]				PEN
0x02	MCLKLOCK	7:0								LOCKEN
0x03	MCLKSTATUS	7:0			PLLS	EXTS	XOSC32KS	OSC32KS	OSCHFS	SOSC
0x04 ... 0x07	Reserved									
0x08	OSCHFCTRLA	7:0	RUNSTDBY		FRQSEL[3:0]					AUTOTUNE
0x09	OSCHFTUNE	7:0	TUNE[7:0]							
0x0A ... 0x0F	Reserved									
0x10	PLLCTRLA	7:0	RUNSTDBY	SOURCE					MULFAC[1:0]	
0x11 ... 0x17	Reserved									
0x18	OSC32KCTRLA	7:0	RUNSTDBY							
0x19 ... 0x1B	Reserved									
0x1C	XOSC32KCTRLA	7:0	RUNSTDBY		CSUT[1:0]			SEL	LPMODE	ENABLE

11.5 Register Description

chanhvinh.com

chanhvinh.com

11.5.1 Main Clock Control A

Name: MCLKCTRLA
Offset: 0x00
Reset: 0x00
Property: Configuration Change Protection

Bit	7	6	5	4	3	2	1	0
	CLKOUT				CLKSEL[3:0]			
Access	R/W				R/W	R/W	R/W	R/W
Reset	0				0	0	0	0

Bit 7 – CLKOUT Peripheral Clock Out
When this bit is written to '1', the peripheral clock is output to the CLKOUT pin.
As long as the peripheral clock is running, the clock is output to the pin.

Bits 3:0 – CLKSEL[3:0] Clock Select
This bit field selects the source for the Main Clock (CLK_MAIN).

Value	Name	Description
0x0	OSCHF	Internal high-frequency oscillator
0x1	OSC32K	32.768 kHz internal oscillator
0x2	XOSC32K	32.768 kHz external crystal oscillator
0x3	EXTCLK	External clock
Other	-	Reserved

© 2021 Microchip Technology Inc.
and its subsidiaries

chanhvinh.com

11.5.2 Main Clock Control B

Name: MCLKCTRLB
Offset: 0x01
Reset: 0x00
Property: Configuration Change Protection

Bit	7	6	5	4	3	2	1	0
				PDIV[3:0]				PEN
Access				R/W	R/W	R/W	R/W	R/W
Reset				0	0	0	0	0

Bits 4:1 – PDIV[3:0] Prescaler Division
If the Prescaler Enable (PEN) bit is written to '1', this bit field defines the division ratio of the main clock prescaler. This bit field can be written during run-time to vary the clock frequency of the system to suit the application requirements.
The user software must ensure a correct configuration of the input frequency (CLK_MAIN) and prescaler settings so that the resulting frequency of CLK_PER never exceeds the allowed maximum (refer to the *Electrical Characteristics* section).

Value	Name	Description
0x0	DIV2	CLK_MAIN divided by 2
0x1	DIV4	CLK_MAIN divided by 4
0x2	DIV8	CLK_MAIN divided by 8
0x3	DIV16	CLK_MAIN divided by 16
0x4	DIV32	CLK_MAIN divided by 32
0x5	DIV64	CLK_MAIN divided by 64
0x6-0x7	-	Reserved
0x8	DIV6	CLK_MAIN divided by 6
0x9	DIV10	CLK_MAIN divided by 10
0xA	DIV12	CLK_MAIN divided by 12
0xB	DIV24	CLK_MAIN divided by 24
0xC	DIV48	CLK_MAIN divided by 48
other	-	Reserved

Bit 0 – PEN Prescaler Enable
This bit must be written to '1' to enable the prescaler. When enabled, the division ratio is selected by the PDIV bit field.
When this bit is written to '0', the main clock will pass through undivided (CLK_PER = CLK_MAIN), regardless of the value of PDIV.

© 2021 Microchip Technology Inc. and its subsidiaries

chanhvinh.com

11.5.3 Main Clock Lock

Name: MCLKLOCK
Offset: 0x02
Reset: 0x00
Property: Configuration Change Protection

Bit	7	6	5	4	3	2	1	0
								LOCKEN
Access								R/W
Reset								0

Bit 0 – LOCKEN Lock Enable
Writing this bit to '1' will lock the CLKCTRL.MCLKCTRLA and CLKCTRL.MCLKCTRLB registers and, if applicable, the calibration settings for the current main clock source from further software updates. Once locked, the CLKCTRL.MCLKLOCK registers cannot be accessed until the next hardware Reset.
This protects the CLKCTRL.MCLKCTRLA and CLKCTRL.MCLKCTRLB registers and calibration settings for the main clock source from unintentional modification by software.

chanhvinh.com

11.5.4 Main Clock Status

Name: MCLKSTATUS
Offset: 0x03
Reset: 0x00
Property: -

All Status bits, except SOSC, will be available only if the respective source is requested as the main clock or by a peripheral. If the oscillator RUNSTDBY bit is set and the oscillator is unused/not requested, these bits will be '0'.

Bit	7	6	5	4	3	2	1	0
			PLLS	EXTS	XOSC32KS	OSC32KS	OSCHFS	SOSC
Access			R	R	R	R	R	R
Reset			0	0	0	0	0	0

Bit 5 – PLLS PLL Status

Value	Description
0	PLL is not stable
1	PLL is stable

Bit 4 – EXTS External Clock Status

Value	Description
0	EXTCLK is not stable
1	EXTCLK is stable

Bit 3 – XOSC32KS 32.768 kHz External Crystal Oscillator Status

Value	Description
0	XOSC32K is not stable
1	XOSC32K is stable

Bit 2 – OSC32KS 32.768 kHz Ultra Low-Power Internal Oscillator Status

Value	Description
0	OSC32K is not stable
1	OSC32K is stable

Bit 1 – OSCHFS Internal High-Frequency Oscillator Status

Value	Description
0	OSCHF is not stable
1	OSCHF is stable

Bit 0 – SOSC Main Clock Oscillator Changing

Value	Description
0	The clock source for CLK_MAIN is not undergoing a switch
1	The clock source for CLK_MAIN is undergoing a switch and will change as soon as the new source is stable

© 2021 Microchip Technology Inc. and its subsidiaries

chanhvinh.com

11.5.5 Internal High-Frequency Oscillator Control A

Name: OSCHFCTRLA
Offset: 0x08
Reset: 0x0C
Property: Configuration Change Protection

Bit	7	6	5	4	3	2	1	0
	RUNSTDBY		FRQSEL[3:0]					AUTOTUNE
Access	R/W		R/W	R/W	R/W	R/W		R/W
Reset	0		0	0	1	1		0

Bit 7 – RUNSTDBY Run Standby
This bit controls whether the internal high-frequency oscillator (OSCHF) is always running or not.

Value	Description
0	The OSCHF oscillator will only run when requested by a peripheral or by the main clock (1)
1	The OSCHF oscillator will always run in Active, Idle and Standby sleep modes (2)

Notes:
1. The requesting peripheral, or the main clock, must take the oscillator start-up time into account.
2. The oscillator signal is only available if requested and will be available after two OSCHF cycles.

Bits 5:2 – FRQSEL[3:0] Frequency Select
This bit field controls the output frequency of the internal high-frequency oscillator (OSCHF).

Value	Name	Description
0x0	1 MHz	1 MHz output
0x1	2 MHz	2 MHz output
0x2	3 MHz	3 MHz output
0x3	4 MHz	4 MHz output (default)
0x4	-	Reserved
0x5	8 MHz	8 MHz output
0x6	12 MHz	12 MHz output
0x7	16 MHz	16 MHz output
0x8	20 MHz	20 MHz output
0x9	24 MHz	24 MHz output
Other	-	Reserved

Bit 0 – AUTOTUNE Auto-Tune Enable
This bit controls whether the 32.768 kHz crystal auto-tune functionality of the internal high-frequency oscillator (OSCHF) is enabled or not.

Value	Description
0	The auto-tune functionality of the OSCHF oscillator is disabled
1	The auto-tune functionality of the OSCHF oscillator is enabled

© 2021 Microchip Technology Inc. and its subsidiaries

chanhvinh.com

11.5.6 Internal High-Frequency Oscillator Frequency Tune

Name: OSCHFTUNE
Offset: 0x09
Reset: 0x00
Property: -

Bit	7	6	5	4	3	2	1	0
	TUNE[7:0]							
Access	R/W	R/W	R/W	R/W	R/W	R/W	R/W	R/W
Reset	0	0	0	0	0	0	0	0

Bits 7:0 – TUNE[7:0] User Frequency Tuning
This bit field controls the manual tuning of the output frequency of the internal high-frequency oscillator (OSCHF). The frequency can be tuned 32 steps down or 31 steps up from the oscillator's target frequency. Thus, the register's acceptable input value range is -32 to +31.
Writing to bits 6 and 7 has no effect, as bit 5 will be mirrored to bits 6 and 7 due to the 6-bit value in this bit field being represented in a signed (two's complement) form.

Note: If the Auto-Tune Enable (AUTOTUNE) bit in the Internal High-Frequency Oscillator Control A (CLKCTRL.OSCHFCTRLA) register is enabled, the TUNE value is locked. When AUTOTUNE is disabled, it takes up to three µs and three Main Clock cycles before this bit field is updated with the latest tune value from the auto-tune operation.

© 2021 Microchip Technology Inc.
and its subsidiaries

chanhvinh.com

11.5.7 PLL Control A

Name: PLLCTRLA
Offset: 0x10
Reset: 0x00
Property: Configuration Change Protection

Bit	7	6	5	4	3	2	1	0
	RUNSTDBY	SOURCE					MULFAC[1:0]	
Access	R/W	R/W					R/W	R/W
Reset	0	0					0	0

Bit 7 – RUNSTDBY Run Standby
This bit controls whether the Phase-Locked Loop (PLL) is always running or not.

Value	Description
0	The PLL will only run if requested by a peripheral (1)
1	The PLL will always run in Active, Idle and Standby sleep modes (2)

Notes:
1. The requesting peripheral must take the PLL start-up time and PLL source start-up time into account.
2. The oscillator signal will only be available if requested and will be available after two PLL cycles.

Bit 6 – SOURCE Select Source for PLL
This bit controls the Phase-Locked Loop (PLL) clock source.

Value	Name	Description
0	OSCHF	High-frequency internal oscillator as PLL source
1	EXTCLK	External clock as PLL source

Bits 1:0 – MULFAC[1:0] Multiplication Factor
This bit field controls the multiplication factor for the Phased-Locked Loop (PLL).

Value	Name	Description
0x0	DISABLE	PLL is disabled
0x1	2x	2 x multiplication factor
0x2	3x	3 x multiplication factor
0x3	-	Reserved

© 2021 Microchip Technology Inc.
and its subsidiaries

chanhvinh.com

11.5.8 32.768 kHz Oscillator Control A

Name: OSC32KCTRLA
Offset: 0x18
Reset: 0x00
Property: Configuration Change Protection

Bit	7	6	5	4	3	2	1	0
	RUNSTDBY							
Access	R/W							
Reset	0							

Bit 7 – RUNSTDBY Run Standby
This bit controls whether the 32.768 kHz Oscillator (OSC32K) is always running or not.

Value	Description
0	The OSC32K oscillator will only run when requested by a peripheral or by the main clock (1)
1	The OSC32K oscillator will always run in Active, Idle, Standby and Power-Down sleep modes (2)

Notes:
1. The requesting peripheral, or the main clock, must take the oscillator start-up time into account.
2. The oscillator signal is only available if requested and will be available after four OSC32K cycles.

© 2021 Microchip Technology Inc.
and its subsidiaries

chanhvinh.com

11.5.9 32.768 kHz Crystal Oscillator Control A

Name: XOSC32KCTRLA
Offset: 0x1C
Reset: 0x00
Property: Configuration Change Protection

Bit	7	6	5	4	3	2	1	0
	RUNSTDBY		CSUT[1:0]			SEL	LPMODE	ENABLE
Access	R/W		R/W	R/W		R/W	R/W	R/W
Reset	0		0	0		0	0	0

Bit 7 – RUNSTDBY Run Standby
This bit controls whether the 32.768 kHz Crystal Oscillator (XOSC32K) is always running or not, and in which modes when the ENABLE bit is '1'.

Value	Description
0	The XOSC32K oscillator will only run when requested by a peripheral or by the main clock, in Active and Idle sleep modes (1)
1	The XOSC32K oscillator will always run in Active, Idle, Standby and Power-Down sleep modes (2)

Notes:
1. The requesting peripheral, or the main clock, must take the oscillator start-up time into account.
2. The oscillator signal is only available if requested and will be available after a maximum of three XOSC32K cycles if the initial crystal start-up time has already ended.

Bits 5:4 – CSUT[1:0] Crystal Start-Up Time
This bit field controls the start-up time of the 32.768 kHz Crystal Oscillator (XOSC32K) when the Source Select (SEL) bit is '0'.

Value	Name	Description
0x0	1K	1k cycles
0x1	16K	16k cycles
0x2	32K	32k cycles
0x3	64K	64k cycles

Note: This bit field is read-only when the ENABLE bit or the XOSC32K Status (XOSCS) bit in the Main Clock Status (CLKCTRL.MCLKSTATUS) register is '1'.

Bit 2 – SEL Source Select
This bit controls the source of the 32.768 kHz Crystal Oscillator (XOSC32K).

Value	Description
0	External crystal the XTAL32K1 and XTAL32K2 pins
1	External clock on the XTAL32K1 pin

Note: This bit field is read-only when the ENABLE bit or the XOSC32K Status (XOSCS) bit in the Main Clock Status (CLKCTRL.MCLKSTATUS) register is '1'.

Bit 1 – LPMODE Low-Power Mode
This bit controls whether the 32.768 kHz Crystal Oscillator (XOSC32K) is in Low-Power mode or not.
Note: Enabling the Low-Power mode can increase the crystal's start-up time. Mitigate this by altering the crystal implementation to reduce serial resistance and overall capacitance or by disabling Low-Power mode.

Value	Description
0	The Low-Power mode is disabled
1	The Low-Power mode is enabled

© 2021 Microchip Technology Inc. and its subsidiaries

chanhvinh.com

Bit 0 – ENABLE Enable
This bit controls whether the 32.768 kHz Crystal Oscillator (XOSC32K) is enabled or not.

Value	Description
0	The XOSC32K oscillator is disabled
1	The XOSC32K oscillator is enabled and overrides normal port operation for the respective oscillator pins

chanhvinh.com

12. SLPCTRL - Sleep Controller

12.1 Features

- Power Management for Adjusting Power Consumption and Functions
- Three Sleep Modes:
  - Idle
  - Standby
  - Power-Down
- Configurable Standby Mode Where Peripherals Can Be Configured as ON or OFF

12.2 Overview

Sleep modes are used to shut down peripherals and clock domains in the device to save power. The Sleep Controller (SLPCTRL) controls and handles the transitions between Active and sleep modes.

There are four modes available: One Active mode in which software is executed, and three sleep modes. The available sleep modes are Idle, Standby and Power-Down.

All sleep modes are available and can be entered from the Active mode. In Active mode, the CPU is executing application code. When the device enters sleep mode, the program execution is stopped. The application code decides which sleep mode to enter and when.

Interrupts are used to wake the device from sleep. The available interrupt wake-up sources depend on the configured sleep mode. When an interrupt occurs, the device will wake up and execute the Interrupt Service Routine before continuing normal program execution from the first instruction after the `SLEEP` instruction. Any Reset will take the device out of sleep mode.

The content of the register file, SRAM and registers, is kept during sleep. If a Reset occurs during sleep, the device will reset, start, and execute from the Reset vector.

12.2.1 Block Diagram

Figure 12-1. SLPCTRL Block Diagram

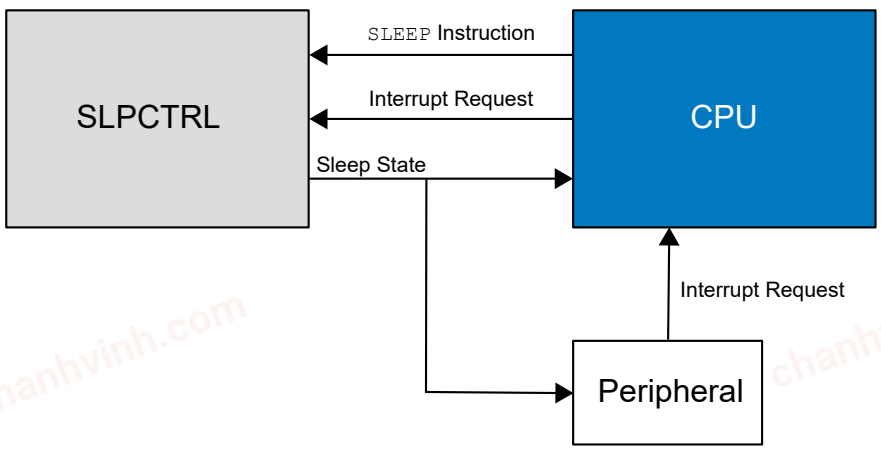

12.3 Functional Description

12.3.1 Initialization

To put the device into a sleep mode, follow these steps:

chanhvinh.com

1. Configure and enable the interrupts that can wake the device from sleep.
   Enable also the global interrupts.

   WARNING If there are no interrupts enabled when going to sleep, the device cannot wake up again. Only a Reset will allow the device to continue operation.

2. Select which sleep mode to enter, and enable the Sleep Controller by writing to the Sleep Mode (SMODE) bit field and the Enable (SEN) bit in the Control A (SLPCTRL.CTRLA) register.
   The `SLEEP` instruction must be executed to make the device go to sleep.

12.3.2 Voltage Regulator Configuration

A voltage regulator is used to regulate the core voltage. The regulator can be configured to balance power consumption, wake-up time from sleep, and maximum clock speed.

The Voltage Regulator Control (SLPCTRL.VREGCTRL) register is used to configure the regulator start-up time and power consumption. The Power Mode Select (PMODE) bit field in SLPCTRL.VREGCTRL can be set to make the regulator switch to Normal mode when OSC32K is the only oscillator enabled and if the device is in sleep mode. In Normal mode, the regulator consumes less power but can supply only a limited amount of current, permitting only a low clock frequency.

The user may select one of the following Voltage Regulator Power modes:

Table 12-1. Voltage Regulator Power Modes Description

Voltage Regulator Power Mode	Description	Condition	Active/Idle	Standby/Power-Down
Normal (AUTO)	Maximum performance in Active mode and Idle mode	External clock or fast oscillator	Maximum Performance	Low Power
		32.768 kHz oscillator	Low Power	Low Power
Performance (FULL)	Maximum performance in all modes (Active and Sleep) and fast start-up from all sleep modes		Maximum Performance	Maximum Performance

12.3.3 Operation

12.3.3.1 Sleep Modes

Three different sleep modes can be enabled to reduce power consumption.

Idle The CPU stops executing code, resulting in reduced power consumption.
All peripherals are running, and all interrupt sources can wake the device.

Standby All high-frequency clocks are stopped unless running in Standby sleep mode is enabled for a peripheral or clock. This is enabled by writing the corresponding RUNSTDBY bit to '1'. The power consumption is dependent on the enabled functionality.
A subset of interrupt sources can wake the device(1).

Power-Down All high-frequency clocks are stopped, resulting in a power consumption lower than the Idle sleep mode. When operating at temperatures above 70°C, the power consumption can be reduced further by writing the High-Temperature Low Leakage Enable (HTLLEN) bit in the Voltage Regulator Control (SLPCTRL.VREGCTRL) register to '1'.
A subset of the peripherals are running, and a subset of interrupt sources can wake the device.(1)

chanhvinh.com

Important: The TWI address match and CCL wake-up sources must be disabled when High-Temperature Low Leakage Enable is activated to avoid unpredictable behavior.

Note:

1. Refer to the *Sleep Mode Activity* tables for further information.

Refer to the *Wake-up Time* section for information on how the wake-up time is affected by the different sleep modes.

Table 12-2. Sleep Mode Activity Overview for Peripherals

Peripheral	Active in Sleep Mode			
	Idle	Standby	Power-Down	
			HTLLEN=0	HTLLEN=1
CPU				
RTC	X	X(1,2)	X(2)	X(2)
WDT	X	X	X	X
BOD	X	X	X	X
EVSYS	X	X	X	X
CCL	X	X(1)		
ACn				
ADCn				
DACn				
PTC				
ZCDn				
TCAn				
TCBn				
All other peripherals	X			

Notes:

1. For the peripheral to run in Standby sleep mode, the RUNSTDBY bit of the corresponding peripheral must be set.
2. In Standby sleep mode, only the RTC functionality requires the RUNSTDBY bit to be set. In Power-Down sleep mode, only the PIT functionality is available.

Table 12-3. Sleep Mode Activity Overview for Clock Sources

Clock Source	Active in Sleep Mode			
	Idle	Standby	Power-Down	
			HTLLEN=0	HTLLEN=1
Main clock source	X	X(1)		
RTC clock source	X	X(1,2)	X(2)	X(2)
WDT oscillator	X	X	X	X
BOD oscillator(3)	X	X	X	X

chanhvinh.com

.....continued

Clock Source	Active in Sleep Mode			
	Idle	Standby	Power-Down	
			HTLLEN=0	HTLLEN=1
CCL clock source	X	X(1)		
TCD clock source	X			

Notes:

1. For the clock source to run in Standby sleep mode, the RUNSTDBY bit of the corresponding peripheral must be set.
2. In Standby sleep mode, only the RTC functionality requires the RUNSTDBY bit to be set. In Power-Down sleep mode, only the PIT functionality is available.
3. The Sampled mode only.

Table 12-4. Sleep Mode Wake-up Sources

Wake-Up Sources	Active in Sleep Mode			
	Idle	Standby	Power-Down	
			HTLLEN=0	HTLLEN=1
PORT Pin interrupt	X	X	X(1)	X(1)
BOD VLM interrupt	X	X	X	X
RTC interrupts	X	X(2,3)	X(3)	X(3)
TWI Address Match interrupt	X	X	X	-
CCL interrupts	X	X	X(4)	-
USART Start-Of-Frame interrupt	-	X	-	-
TCAn interrupts	X	X	-	-
TCBn interrupts				
ACn interrupts				
ADCn interrupts				
PTC interrupts				
ZCD interrupts				
All other interrupts	X	-	-	-

Notes:

1. Only fully asynchronous pins can trigger an interrupt and wake up the device from all sleep modes, including modes where the Peripheral Clock (CLK_PER) is stopped. Refer to the *I/O Multiplexing and Considerations* section for further details on which pins support fully asynchronous pin change sensing.
2. For the peripheral to run in Standby sleep mode, the RUNSTDBY bit of the corresponding peripheral must be set.
3. In Standby sleep mode, only the RTC functionality requires the RUNSTDBY bit to be set. In Power-Down sleep mode, only the PIT functionality is available.
4. CCL will only wake up the device if the path through LUTn is asynchronous (FILTSEL=`0x0` and EDGEDET=`0x0` in the CCL.LUTnCTRLA register).

chanhvinh.com

12.3.3.2 Wake-Up Time

The normal wake-up time for the device is six main clock cycles (CLK_PER), plus the time it takes to start the main clock source and the time it takes to start the regulator if it has been switched off:

- In Idle sleep mode, the main clock source is kept running to eliminate additional wake-up time
- In Standby sleep mode, the main clock might be running depending on the peripheral configuration
- In Power-Down sleep mode, only the OSC32K oscillator and the Real-Time Clock (RTC) may be running if the clock is used by the Brown-out Detector (BOD), Watchdog Timer (WDT) or Periodic Interrupt Timer (PIT). All the other clock sources will be OFF.

Table 12-5. Sleep Modes and Start-Up Time

Sleep Mode	Start-Up Time
Idle	Six clock cycles
Standby	Six clock cycles + one (OSC start-up + Regulator start-up)
Power-Down	Six clock cycles + one (OSC start-up + Regulator start-up)

The start-up time for the different clock sources is described in the *CLKCTRL - Clock Controller* section.

In addition to the normal wake-up time, it is possible to make the device wait until the BOD is ready before executing the code. This is done by writing `0x3` to the BOD operation mode in the Active and Idle (ACTIVE) bit field in the BOD Configuration (FUSE.BODCFG) fuse. If the BOD is ready before the normal wake-up time, the total wake-up time will be the same. If the BOD takes longer than the normal wake-up time, the wake-up time will be extended until the BOD is ready. This ensures correct supply voltage whenever code is executed.

12.3.4 Debug Operation

During run-time debugging, this peripheral will continue normal operation. The SLPCTRL is only affected by a break in the debug operation: If the SLPCTRL is in a sleep mode when a break occurs, the device will wake up, and the SLPCTRL will go to Active mode, even if there are no pending interrupt requests.

If the peripheral is configured to require periodic service by the CPU through interrupts or similar, improper operation or data loss may result during halted debugging.

12.3.5 Configuration Change Protection

This peripheral has registers that are under Configuration Change Protection (CCP). To write to these registers, a certain key must first be written to the CPU.CCP register, followed by a write access to the protected bits within four CPU instructions.

Attempting to write to a protected register without following the appropriate CCP unlock sequence leaves the protected register unchanged.

The following registers are under CCP:

Table 12-6. SLPCTRL - Registers Under Configuration Change Protection

Register	Key
SLPCTRL.VREGCTRL	IOREG

chanhvinh.com

12.4 Register Summary

Offset	Name	Bit Pos.	7	6	5	4	3	2	1	0
0x00	CTRLA	7:0					SMODE[2:0]			SEN
0x01	VREGCTRL	7:0				HTLLEN		PMODE[2:0]		

12.5 Register Description

chanhvinh.com

12.5.1 Control A

Name: CTRLA
Offset: 0x00
Reset: 0x00
Property: -

Bit	7	6	5	4	3	2	1	0
					SMODE[2:0]			SEN
Access					R/W	R/W	R/W	R/W
Reset					0	0	0	0

Bits 3:1 – SMODE[2:0] Sleep Mode
Writing these bits selects the desired sleep mode when the Sleep Enable (SEN) bit is written to '1' and the SLEEP instruction is executed.

Value	Name	Description
0x0	IDLE	Idle mode enabled
0x1	STANDBY	Standby mode enabled
0x2	PDOWN	Power-Down mode enabled
Other	-	Reserved

Bit 0 – SEN Sleep Enable
This bit must be written to '1' before the SLEEP instruction is executed to make the microcontroller enter the selected sleep mode.

© 2021 Microchip Technology Inc. and its subsidiaries

chanhvinh.com

12.5.2 Voltage Regulator Control Register

Name: VREGCTRL
Offset: 0x01
Reset: 0x00
Property: Configuration Change Protection

Bit	7	6	5	4	3	2	1	0
				HTLLEN		PMODE[2:0]		
Access				R/W		R/W	R/W	R/W
Reset				0		0	0	0

Bit 4 – HTLLEN High-Temperature Low Leakage Enable
This bit controls whether the current leakage is reduced or not when operating at temperatures above 70°C.

Value	Name	Description
0	OFF	High-temperature low leakage disabled(1)
1	ON	High-temperature low leakage enabled(2,3)

⚠WARNING

1. If entering the Standby sleep mode, this bit must be '0'.
2. This will only have an effect when PMODE is set to AUTO and must only be used for the Power-Down sleep mode.
3. The TWI address match and CCL wake-up sources must be disabled before writing this bit to '1'.

Bits 2:0 – PMODE[2:0] Power Mode Select
This bit field controls the drive strength of the voltage regulator.

Value	Name	Description
0x0	AUTO	The regulator will run with maximum performance in active/idle mode unless the 32.768 kHz oscillator source is selected. Power saving in deep sleep modes.
0x1	FULL	Maximum performance voltage regulator drive strength in all modes. Faster start-up from sleep modes.
Other	-	Reserved

© 2021 Microchip Technology Inc.
and its subsidiaries

chanhvinh.com

13. RSTCTRL - Reset Controller

13.1 Features

- Returns the Device to an Initial State after a Reset
- Identifies the Previous Reset Source
- Power Supply Reset Sources:
  - Power-on Reset (POR)
  - Brown-out Detector (BOD) Reset
- User Reset Sources:
  - External Reset ($\overline{\text{RESET}}$)
  - Watchdog Timer (WDT) Reset
  - Software Reset (SWRST)
  - Unified Program and Debug Interface (UPDI) Reset

13.2 Overview

The Reset Controller (RSTCTRL) manages the Reset of the device. When receiving a Reset request, it sets the device to an initial state and allows the Reset source to be identified by the software. The Reset controller can also be used to issue a Software Reset (SWRST).

13.2.1 Block Diagram

Figure 13-1. Reset System Overview

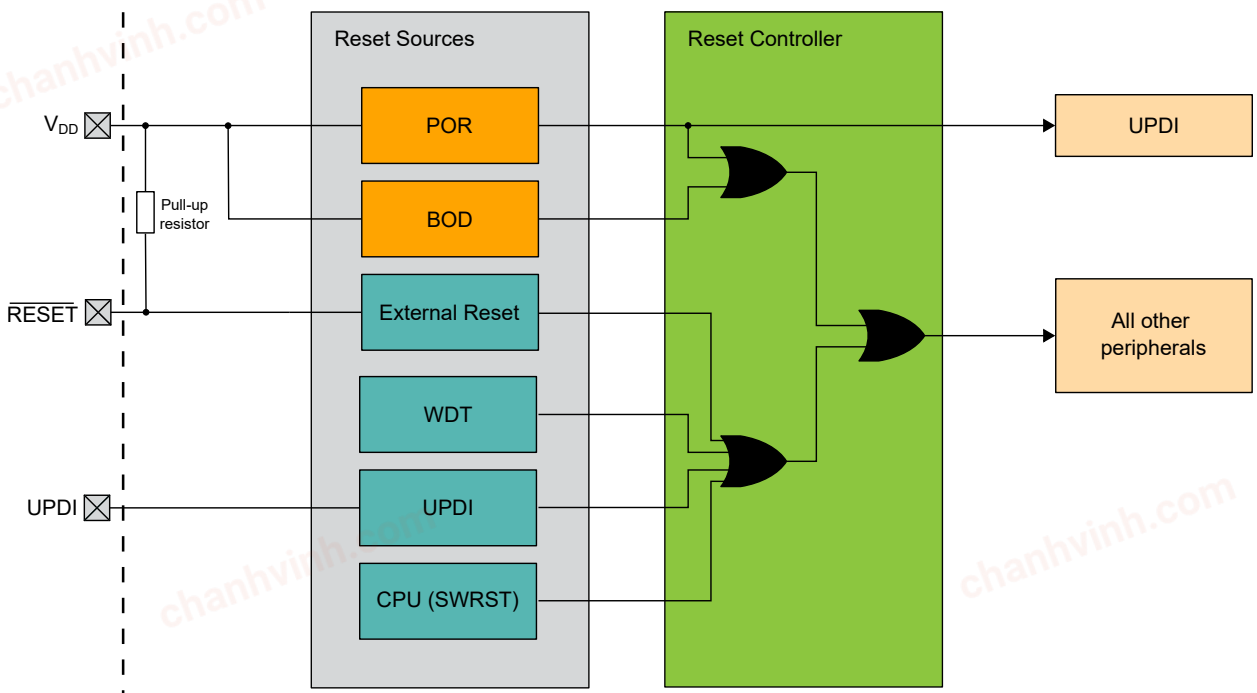

13.2.2 Signal Description

Signal	Description	Type
$\overline{\text{RESET}}$	External Reset (active-low)	Digital input

chanhvinh.com

.....continued

Signal	Description	Type
UPDI	Unified Program and Debug Interface	Digital input

13.3 Functional Description

13.3.1 Initialization

The RSTCTRL is always enabled, but some of the Reset sources must be enabled individually (either by Fuses or by software) before they can request a Reset.

After a Reset from any source, the registers in the device with automatic loading from the Fuses or from the Signature Row are updated.

13.3.2 Operation

13.3.2.1 Reset Sources

After any Reset, the source that caused the Reset is found in the Reset Flag (RSTCTRL.RSTFR) register. The user can identify the previous Reset source by reading this register in the software application.

There are two types of Resets based on the source:

- Power Supply Reset Sources:
  - Power-on Reset (POR)
  - Brown-out Detector (BOD) Reset
- User Reset Sources:
  - External Reset ($\overline{\text{RESET}}$)
  - Watchdog Timer (WDT) Reset
  - Software Reset (SWRST)
  - Unified Program and Debug Interface (UPDI) Reset

13.3.2.1.1 Power-on Reset (POR)

The purpose of the Power-on Reset (POR) is to ensure a safe start-up of logic and memories. It is generated by an on-chip detection circuit and is always enabled. The POR is activated when the V_{DD} rises and gives active reset as long as V_{DD} is below the POR threshold voltage (V_{POR}). The reset will last until the Start-up and reset initialization sequence is finished. The Start-up Time (SUT) is determined by fuses. Reset is activated again, without any delay, when V_{DD} falls below the detection level (V_{PORR}).

Figure 13-2. MCU Start-Up, $\overline{\text{RESET}}$ Tied to V_{DD}

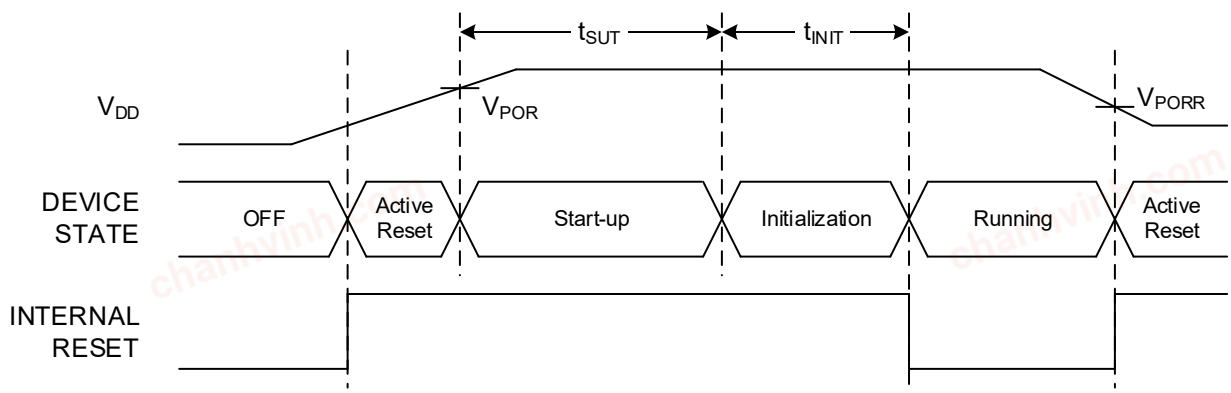

13.3.2.1.2 Brown-out Detector (BOD) Reset

The Brown-out Detector (BOD) needs to be enabled by the user. The BOD is preventing code execution when the voltage drops below a set threshold. This will ensure the voltage level needed for the oscillator to run at the speed required by the application and will avoid code corruption due to low-voltage level.

chanhvinh.com

The BOD issues a System Reset and is not released until the voltage level increases above the set threshold. The on-chip BOD circuit will monitor the V_{DD} level during operation by comparing it to a fixed trigger level. The trigger level for the BOD must be selected by the BOD Configuration (FUSE.BODCFG) fuse.

Figure 13-3. Brown-out Detector Reset

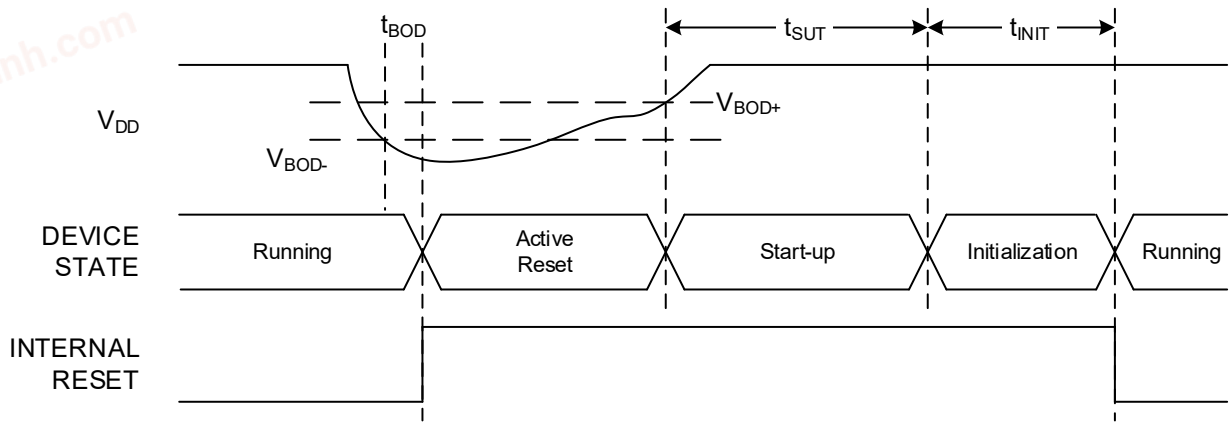

13.3.2.1.3 External Reset ($\overline{\text{RESET}}$)

The $\overline{\text{RESET}}$ pin requires a noise filter that eliminates short, low-going pulses. Filtering the input assures that an external Reset event is only issued when the $\overline{\text{RESET}}$ has been low for a minimum amount of time. See the *Electrical Characteristics* section for the minimum pulse width of the $\overline{\text{RESET}}$ signal.

The external Reset is enabled by configuring the Reset Pin Configuration (RSTPINCFG) bits in the System Configuration 0 (FUSE.SYSCFG0) fuse.

When enabled, the external Reset requests a Reset as long as the $\overline{\text{RESET}}$ pin is low. The device will stay in Reset until the $\overline{\text{RESET}}$ pin is high again.

Figure 13-4. External Reset Characteristics

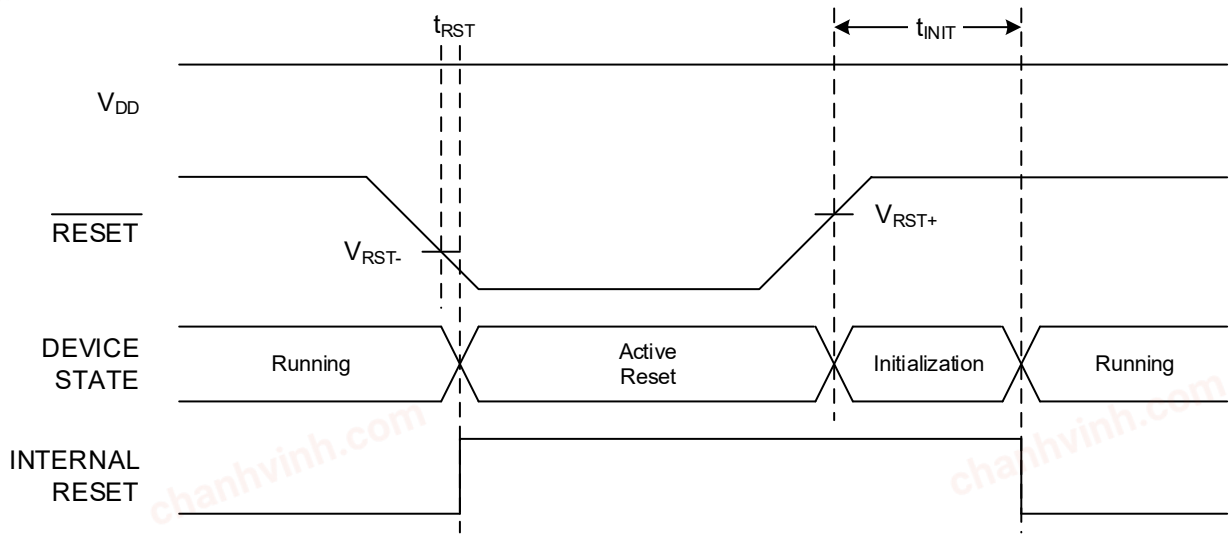

13.3.2.1.4 Watchdog Timer (WDT) Reset

The Watchdog Timer (WDT) is a system function that monitors the correct operation of the program. If the WDT is not handled by software according to the programmed time-out period, a Watchdog Reset will be issued. More details can be found in the *WDT - Watchdog Timer* section.

chanhvinh.com

Figure 13-5. Watchdog Reset

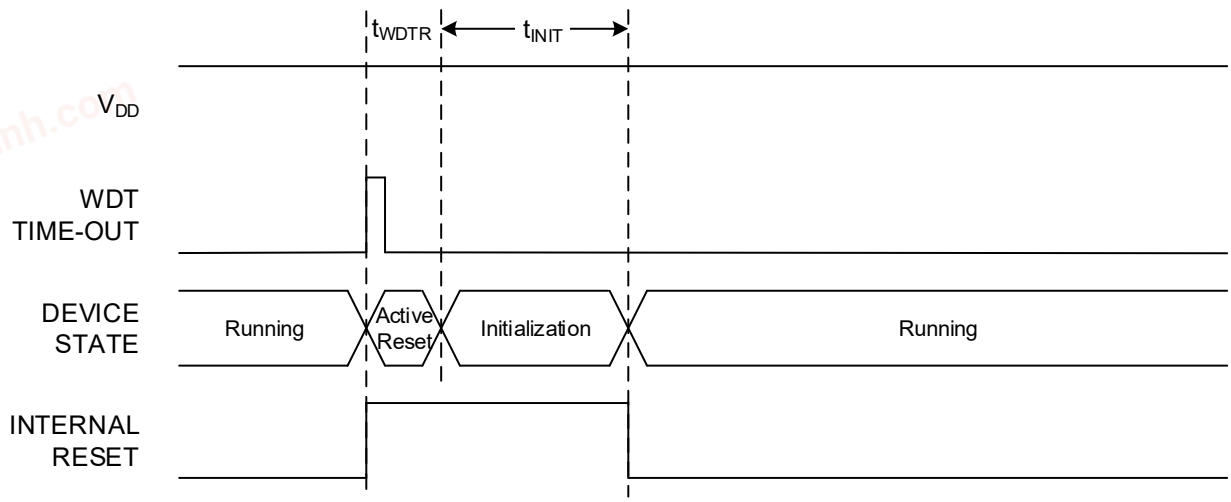

Note: The time t_{WDTR} is approximately 150 ns.

13.3.2.1.5 Software Reset (SWRST)

The software Reset makes it possible to issue a System Reset from the software. The Reset is generated by writing a '1' to the Software Reset (SWRST) bit in the Software Reset (RSTCTRL.SWRR) register.

The Reset sequence will start immediately after the bit is written.

Figure 13-6. Software Reset

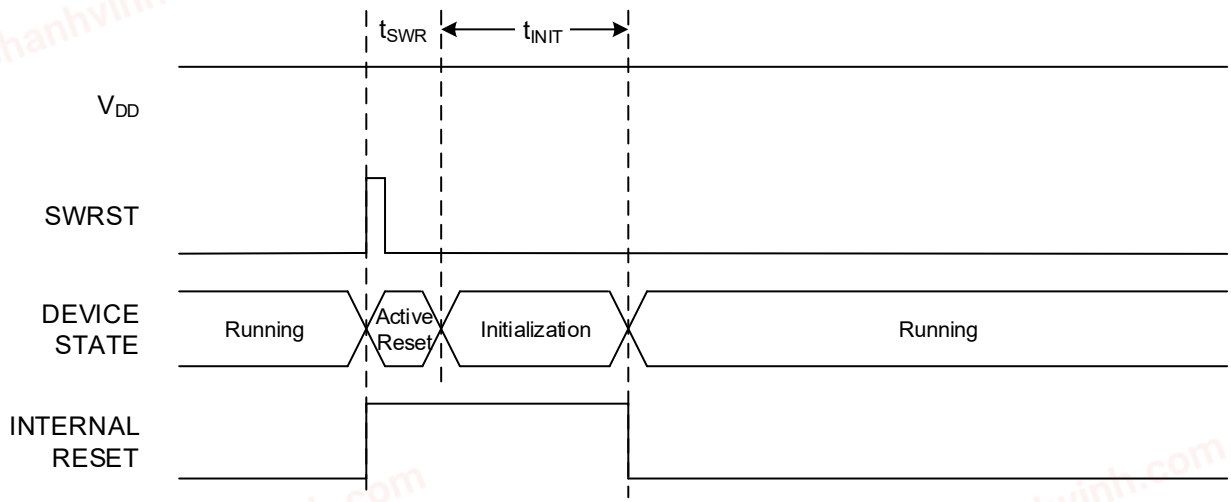

Note: The time t_{SWR} is approximately 150 ns.

13.3.2.1.6 Unified Program and Debug Interface (UPDI) Reset

The Unified Program and Debug Interface (UPDI) contains a separate Reset source used to reset the device during external programming and debugging. The Reset source is accessible only from external debuggers and programmers. More details can be found in the *UPDI - Unified Program and Debug Interface* section.

13.3.2.1.7 Domains Affected By Reset

The following logic domains are affected by the various Resets:

chanhvinh.com

Table 13-1. Logic Domains Affected by Various Resets

Reset Type	Fuses are Reloaded	Reset of UPDI	Reset of Other Volatile Logic
POR	X	X	X
BOD	X		X
External Reset	X		X
Watchdog Reset	X		X
Software Reset	X		X
UPDI Reset	X		X

13.3.2.2 Reset Time

The Reset time can be split into two parts.

The first part is when any of the Reset sources are active. This part depends on the input to the Reset sources. The external Reset is active as long as the $\overline{\text{RESET}}$ pin is low. The Power-on Reset (POR) and the Brown-out Detector (BOD) are active as long as the supply voltage is below the Reset source threshold.

The second part is when all the Reset sources are released, and an internal Reset initialization of the device is done. This time will be increased with the start-up time given by the Start-Up Time Setting (SUT) bit field in the System Configuration 1 (FUSE.SYSCFG1) fuse when the reset is caused by a Power Supply Reset Source. The internal Reset initialization time will also increase if the Cyclic Redundancy Check Memory Scan (CRCSCAN) is configured to run at start-up. This configuration can be changed in the CRC Source (CRCSRC) bit field in the System Configuration 0 (FUSE.SYSCFG0) fuse.

13.3.3 Sleep Mode Operation

The RSTCTRL operates in Active mode and in all sleep modes.

13.3.4 Configuration Change Protection

This peripheral has registers that are under Configuration Change Protection (CCP). To write to these registers, a certain key must first be written to the CPU.CCP register, followed by a write access to the protected bits within four CPU instructions.

Attempting to write to a protected register without following the appropriate CCP unlock sequence leaves the protected register unchanged.

The following registers are under CCP:

Table 13-2. RSTCTRL - Registers Under Configuration Change Protection

Register	Key
RSTCTRL.SWRR	IOREG

chanhvinh.com

13.4 Register Summary

Offset	Name	Bit Pos.	7	6	5	4	3	2	1	0
0x00	RSTFR	7:0			UPDIRF	SWRF	WDRF	EXTRF	BORF	PORF
0x01	SWRR	7:0								SWRST

13.5 Register Description

chanhvinh.com

13.5.1 Reset Flag Register

Name: RSTFR
Offset: 0x00
Reset: 0xXX
Property: -

The Reset flags can be cleared by writing a '1' to the respective flag. All flags will be cleared by a Power-on Reset (POR), except for the Power-on Reset (PORF) flag. All flags will be cleared by a Brown-out Reset (BOR), except for the Power-on Reset (PORF) and Brown-out Reset (BORF) flags.

Bit	7	6	5	4	3	2	1	0
			UPDIRF	SWRF	WDRF	EXTRF	BORF	PORF
Access			R/W	R/W	R/W	R/W	R/W	R/W
Reset			x	x	x	x	x	x

Bit 5 – UPDIRF UPDI Reset Flag
This bit is set to '1' if a UPDI Reset has occurred.

Bit 4 – SWRF Software Reset Flag
This bit is set to '1' if a Software Reset has occurred.

Bit 3 – WDRF Watchdog Reset Flag
This bit is set to '1' if a Watchdog Reset has occurred.

Bit 2 – EXTRF External Reset Flag
This bit is set to '1' if an External Reset has occurred.

Bit 1 – BORF Brown-out Reset Flag
This bit is set to '1' if a Brown-out Reset has occurred.

Bit 0 – PORF Power-on Reset Flag
This bit is set to '1' if a Power-on Reset has occurred.

© 2021 Microchip Technology Inc.
and its subsidiaries

chanhvinh.com

13.5.2 Software Reset Register

Name: SWRR
Offset: 0x01
Reset: 0x00
Property: Configuration Change Protection

Bit	7	6	5	4	3	2	1	0
								SWRST
Access								R/W
Reset								0

Bit 0 – SWRST Software Reset
When this bit is written to '1', a Software Reset will occur.
This bit will always read as '0'.

chanhvinh.com

14. CPUINT - CPU Interrupt Controller

14.1 Features

- Short and Predictable Interrupt Response Time
- Separate Interrupt Configuration and Vector Address for Each Interrupt
- Interrupt Prioritizing by Level and Vector Address
- Non-Maskable Interrupts (NMI) for Critical Functions
- Two Interrupt Priority Levels: 0 (Normal) and 1 (High):
  - One of the interrupt requests can optionally be assigned as a priority level 1 interrupt
  - Optional round robin priority scheme for priority level 0 interrupts
- Interrupt Vectors Optionally Placed in the Application Section or the Boot Loader Section
- Selectable Compact Vector Table (CVT)

14.2 Overview

An interrupt request signals a change of state inside a peripheral and can be used to alter the program execution. The peripherals can have one or more interrupts. All interrupts are individually enabled and configured. When an interrupt is enabled and configured, it will generate an interrupt request when the interrupt condition occurs.

The CPU Interrupt Controller (CPUINT) handles and prioritizes the interrupt requests. When an interrupt is enabled and the interrupt condition occurs, the CPUINT will receive the interrupt request. Based on the interrupt's priority level and the priority level of any ongoing interrupt, the interrupt request is either acknowledged or kept pending until it has priority. After returning from the interrupt handler, the program execution continues from where it was before the interrupt occurred, and any pending interrupts are served after one instruction is executed.

The CPUINT offers NMI for critical functions, one selectable high-priority interrupt and an optional round robin scheduling scheme for normal-priority interrupts. The round robin scheduling ensures that all interrupts are serviced within a certain amount of time.

14.2.1 Block Diagram

Figure 14-1. CPUINT Block Diagram

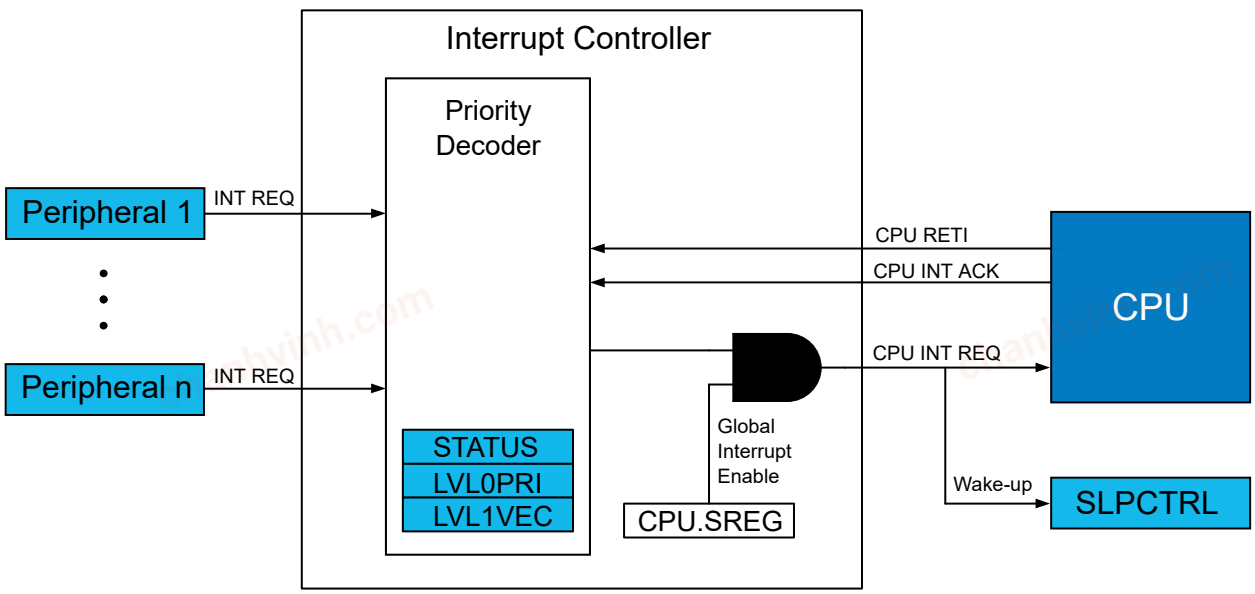

chanhvinh.com

14.3 Functional Description

14.3.1 Initialization

An interrupt must be initialized in the following order:

1. Configure the CPUINT if the default configuration is not adequate (optional):
   - Vector handling is configured by writing to the respective bits (IVSEL and CVT) in the Control A (CPUINT.CTRLA) register.
   - Vector prioritizing by round robin is enabled by writing a '1' to the Round Robin Priority Enable (LVL0RR) bit in CPUINT.CTRLA.
   - Select the Priority Level 1 vector by writing the interrupt vector number to the Interrupt Vector with Priority Level 1 (CPUINT.LVL1VEC) register.
2. Configure the interrupt conditions within the peripheral and enable the peripheral's interrupt.
3. Enable interrupts globally by writing a '1' to the Global Interrupt Enable (I) bit in the CPU Status (CPU.SREG) register.

14.3.2 Operation

14.3.2.1 Enabling, Disabling and Resetting

The global enabling of interrupts is done by writing a '1' to the Global Interrupt Enable (I) bit in the CPU Status (CPU.SREG) register. To disable interrupts globally, write a '0' to the I bit in CPU.SREG.

The desired interrupt lines must also be enabled in the respective peripheral by writing to the peripheral's Interrupt Control (*peripheral*.INTCTRL) register.

The interrupt flags are not automatically cleared after the interrupt is executed. The respective INTFLAGS register descriptions provide information on how to clear specific flags.

14.3.2.2 Interrupt Vector Locations

The interrupt vector placement is dependent on the value of the Interrupt Vector Select (IVSEL) bit in the Control A (CPUINT.CTRLA) register. Refer to the IVSEL description in CPUINT.CTRLA for the possible locations.

If the program never enables an interrupt source, the interrupt vectors are not used, and the regular program code can be placed at these locations.

14.3.2.3 Interrupt Response Time

The minimum interrupt response time is represented in the following table.

Table 14-1. Minimum Interrupt Response Time

	Flash Size > 8 KB	Flash Size ≤ 8 KB
Finish ongoing instruction	One cycle	One cycle
Store PC to stack	Two cycles	Two cycles
Jump to interrupt handler	Three cycles (`jmp`)	Two cycles (`rjmp`)

After the Program Counter is pushed on the stack, the program vector for the interrupt is executed. See the following figure.

chanhvinh.com

Figure 14-2. Interrupt Execution of Single-Cycle Instruction

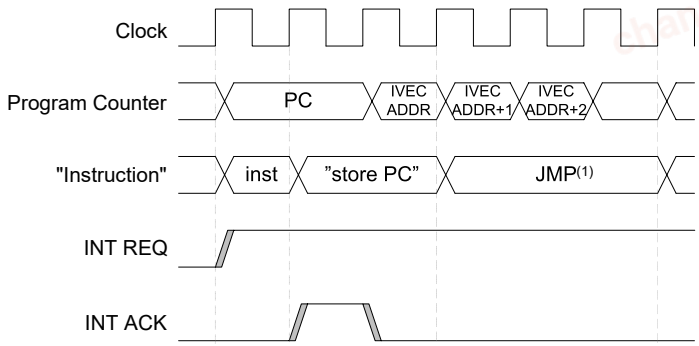

If an interrupt occurs during the execution of a multi-cycle instruction, the instruction is completed before the interrupt is served, as shown in the following figure.

Figure 14-3. Interrupt Execution of Multi-Cycle Instruction

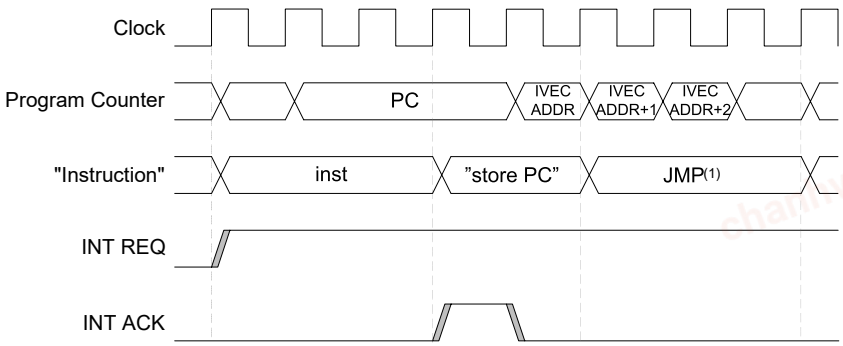

If an interrupt occurs when the device is in a sleep mode, the interrupt execution response time is increased by five clock cycles, as shown in the figure below. Also, the response time is increased by the start-up time from the selected sleep mode.

Figure 14-4. Interrupt Execution From Sleep

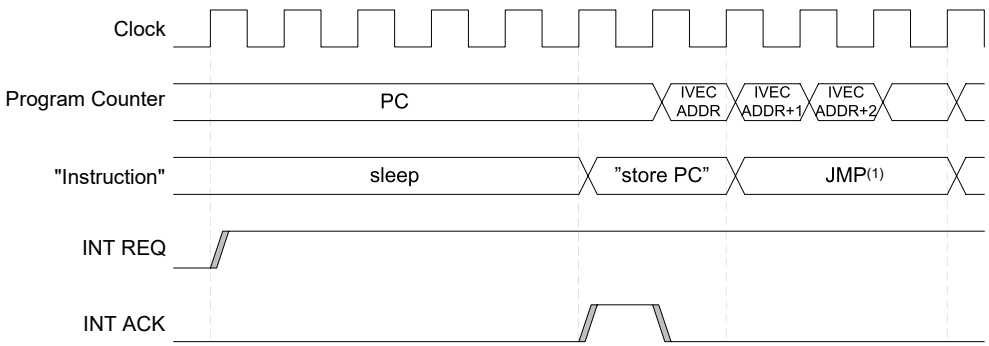

A return from an interrupt handling routine takes four to five clock cycles, depending on the size of the Program Counter. During these clock cycles, the Program Counter is popped from the stack, and the Stack Pointer is incremented.

Note:

1. Devices with 8 KB of Flash or less use `RJMP` instead of `JMP`, which takes only two clock cycles.

14.3.2.4 Interrupt Priority

All interrupt vectors are assigned to one of three possible priority levels, as shown in the table below. An interrupt request from a high-priority source will interrupt any ongoing interrupt handler from a normal-priority source. When returning from the high-priority interrupt handler, the execution of the normal-priority interrupt handler will resume.

chanhvinh.com

Table 14-2. Interrupt Priority Levels

Priority	Level	Source
Highest	Non-Maskable Interrupt	Device-dependent and statically assigned
...	Level 1 (high priority)	One vector is optionally user selectable as level 1
Lowest	Level 0 (normal priority)	The remaining interrupt vectors

14.3.2.4.1 Non-Maskable Interrupts

A Non-Maskable Interrupt (NMI) will be executed regardless of the I bit setting in CPU.SREG. An NMI will never change the I bit. No other interrupt can interrupt an NMI handler. If more than one NMI is requested at the same time, the priority is static according to the interrupt vector address, where the lowest address has the highest priority.

Which interrupts are non-maskable is device-dependent and not subject to configuration. Non-maskable interrupts must be enabled before they can be used. Refer to the *Interrupt Vector Mapping* table of the device for available NMI sources.

14.3.2.4.2 High-Priority Interrupt

It is possible to assign one interrupt request to level 1 (high priority) by writing its interrupt vector number to the CPUINT.LVL1VEC register. This interrupt request will have a higher priority than the other (normal priority) interrupt requests. The priority level 1 interrupts will interrupt the level 0 interrupt handlers.

14.3.2.4.3 Normal-Priority Interrupts

All interrupt vectors other than NMI are assigned to priority level 0 (normal) by default. The user may override this by assigning one of these vectors as a high-priority vector. The device will have many normal-priority vectors, and some of these may be pending at the same time. Two different scheduling schemes are available to choose which of the pending normal-priority interrupts to service first: Static or round robin.

IVEC is the interrupt vector mapping, as listed in the *Peripherals and Architecture* section. The following sections use IVEC to explain the scheduling schemes. IVEC0 is the Reset vector, IVEC1 is the NMI vector, and so on. In a vector table with n+1 elements, the vector with the highest vector number is denoted IVECn. Reset, non-maskable interrupts, and high-level interrupts are included in the IVEC map, but will always be prioritized over the normal-priority interrupts.

Static Scheduling

If several level 0 interrupt requests are pending at the same time, the one with the highest priority is scheduled for execution first. The following figure illustrates the default configuration, where the interrupt vector with the lowest address has the highest priority.

Figure 14-5. Default Static Scheduling

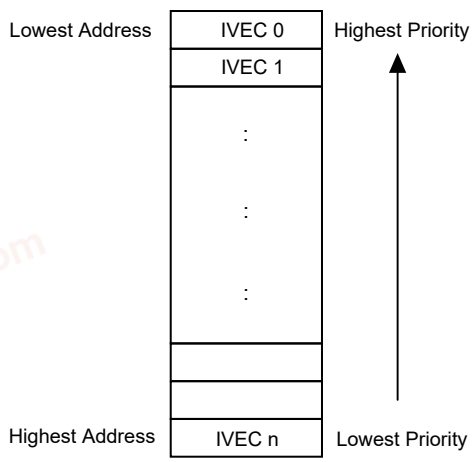

Modified Static Scheduling

The default priority can be changed by writing a vector number to the CPUINT.LVL0PRI register. This vector number will be assigned the lowest priority. The next interrupt vector in the IVEC will have the highest priority among the LVL0 interrupts, as shown in the following figure.

chanhvinh.com

Figure 14-6. Static Scheduling when CPUINT.LVL0PRI is Different From Zero

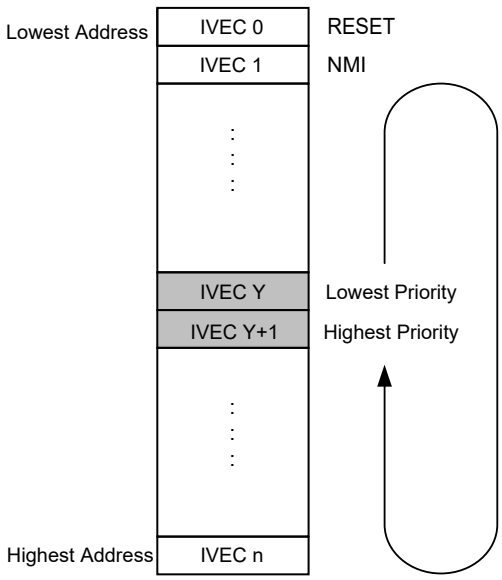

Here, value Y has been written to CPUINT.LVL0PRI, so that interrupt vector Y+1 has the highest priority. Note that, in this case, the priorities will wrap so that the lowest address no longer has the highest priority. This does not include RESET and NMI, which will always have the highest priority.

Refer to the interrupt vector mapping of the device for available interrupt requests and their interrupt vector number.

Round Robin Scheduling

The static scheduling may prevent some interrupt requests from being serviced. To avoid this, the CPUINT offers round robin scheduling for normal-priority (LVL0) interrupts. In the round robin scheduling, the CPUINT.LVL0PRI register stores the last acknowledged interrupt vector number. This register ensures that the last acknowledged interrupt vector gets the lowest priority and is automatically updated by the hardware. The following figure illustrates the priority order after acknowledging IVEC Y and after acknowledging IVEC Y+1.

Figure 14-7. Round Robin Scheduling

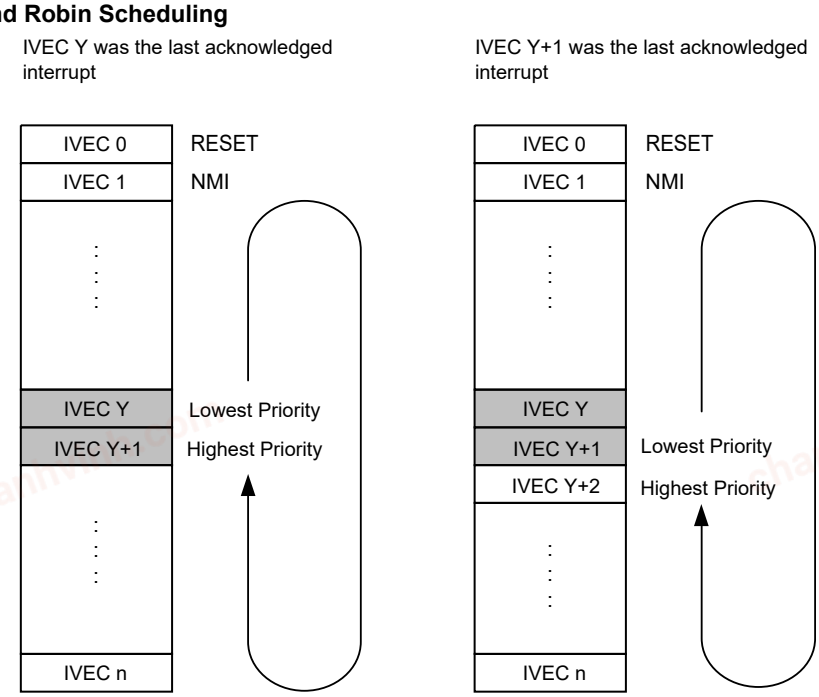

The round robin scheduling for LVL0 interrupt requests is enabled by writing a '1' to the Round Robin Priority Enable (LVL0RR) bit in the Control A (CPUINT.CTRLA) register.

chanhvinh.com

14.3.2.5 Compact Vector Table

The Compact Vector Table (CVT) is a feature to allow writing of compact code by having all level 0 interrupts share the same interrupt vector number. Thus, the interrupts share the same Interrupt Service Routine (ISR). This reduces the number of interrupt handlers and thereby frees up memory that can be used for the application code.

When CVT is enabled by writing a '1' to the CVT bit in the Control A (CPUINT.CTRLA) register, the vector table contains these three interrupt vectors:

1. The non-maskable interrupts (NMI) at vector address 1.
2. The Priority Level 1 (LVL1) interrupt at vector address 2.
3. All priority level 0 (LVL0) interrupts at vector address 3.

This feature is most suitable for devices with limited memory and applications using a small number of interrupt generators.

14.3.3 Debug Operation

When using a level 1 priority interrupt, it is important to make sure the Interrupt Service Routine is configured correctly as it may cause the application to be stuck in an interrupt loop with level 1 priority.

By reading the CPUINT STATUS (CPUINT.STATUS) register, it is possible to see if the application has executed the correct `RETI` (interrupt return) instruction. The CPUINT.STATUS register contains state information, which ensures that the CPUINT returns to the correct interrupt level when the `RETI` instruction is executed at the end of an interrupt handler. Returning from an interrupt will return the CPUINT to the state it had before entering the interrupt.

14.3.4 Configuration Change Protection

This peripheral has registers that are under Configuration Change Protection (CCP). To write to these registers, a certain key must first be written to the CPU.CCP register, followed by a write access to the protected bits within four CPU instructions.

Attempting to write to a protected register without following the appropriate CCP unlock sequence leaves the protected register unchanged.

The following registers are under CCP:

Table 14-3. CPUINT - Registers under Configuration Change Protection

Register	Key
The IVSEL and CVT bitfields in CPUINT.CTRLA	IOREG

chanhvinh.com

14.4 Register Summary

Offset	Name	Bit Pos.	7	6	5	4	3	2	1	0
0x00	CTRLA	7:0		IVSEL	CVT					LVL0RR
0x01	STATUS	7:0	NMIEX						LVL1EX	LVL0EX
0x02	LVL0PRI	7:0	LVL0PRI[7:0]							
0x03	LVL1VEC	7:0	LVL1VEC[7:0]							

14.5 Register Description

chanhvinh.com

14.5.1 Control A

Name: CTRLA
Offset: 0x00
Reset: 0x00
Property: Configuration Change Protection

Bit	7	6	5	4	3	2	1	0
		IVSEL	CVT					LVL0RR
Access		R/W	R/W					R/W
Reset		0	0					0

Bit 6 – IVSEL Interrupt Vector Select

Value	Description
0	Interrupt vectors are placed after the BOOT section of the Flash(1)
1	Interrupt vectors are placed at the start of the BOOT section of the Flash

Note:
1. When the entire Flash is configured as a BOOT section, this bit will be ignored.

Bit 5 – CVT Compact Vector Table

Value	Description
0	Compact Vector Table function is disabled
1	Compact Vector Table function is enabled

Bit 0 – LVL0RR Round Robin Priority Enable
This bit is not protected by the Configuration Change Protection mechanism.

Value	Description
0	Priority is fixed for priority level 0 interrupt requests: The lowest interrupt vector address has the highest priority.
1	The round robin priority scheme is enabled for priority level 0 interrupt requests

© 2021 Microchip Technology Inc. and its subsidiaries

chanhvinh.com

14.5.2 Status

Name: STATUS
Offset: 0x01
Reset: 0x00
Property: -

Bit	7	6	5	4	3	2	1	0
	NMIEX						LVL1EX	LVL0EX
Access	R						R	R
Reset	0						0	0

Bit 7 – NMIEX Non-Maskable Interrupt Executing
This flag is set if a non-maskable interrupt is executing. The flag is cleared when returning (RETI) from the interrupt handler.

Bit 1 – LVL1EX Level 1 Interrupt Executing
This flag is set when a priority level 1 interrupt is executing, or when the interrupt handler has been interrupted by an NMI. The flag is cleared when returning (RETI) from the interrupt handler.

Bit 0 – LVL0EX Level 0 Interrupt Executing
This flag is set when a priority level 0 interrupt is executing, or when the interrupt handler has been interrupted by a priority level 1 interrupt or an NMI. The flag is cleared when returning (RETI) from the interrupt handler.

© 2021 Microchip Technology Inc.
and its subsidiaries

chanhvinh.com

14.5.3 Interrupt Priority Level 0

Name: LVL0PRI
Offset: 0x02
Reset: 0x00
Property: -

Bit	7	6	5	4	3	2	1	0
	LVL0PRI[7:0]							
Access	R/W	R/W	R/W	R/W	R/W	R/W	R/W	R/W
Reset	0	0	0	0	0	0	0	0

Bits 7:0 – LVL0PRI[7:0] Interrupt Priority Level 0
This register is used to modify the priority of the LVL0 interrupts. See the section Normal-Priority Interrupts for more information.

chanhvinh.com

14.5.4 Interrupt Vector with Priority Level 1

Name: LVL1VEC
Offset: 0x03
Reset: 0x00
Property: -

Bit	7	6	5	4	3	2	1	0
	LVL1VEC[7:0]							
Access	R/W	R/W	R/W	R/W	R/W	R/W	R/W	R/W
Reset	0	0	0	0	0	0	0	0

Bits 7:0 – LVL1VEC[7:0] Interrupt Vector with Priority Level 1
This bit field contains the number of the single vector with increased priority level 1 (LVL1). If this bit field has the value `0x00`, no vector has LVL1. Consequently, the LVL1 interrupt is disabled.

chanhvinh.com

15. EVSYS - Event System

15.1 Features

- System for Direct Peripheral-to-Peripheral Signaling
- Peripherals Can Directly Produce, Use, and React to Peripheral Events
- Short and Predictable Response Time
- Up to 10 Parallel Event Channels Available
- Each Channel is Driven by One Event Generator and Can Have Multiple Event Users
- Events Can be Sent and/or Received by Most Peripherals and by Software
- The Event System Works in Active, Idle, and Standby Sleep Modes

15.2 Overview

The Event System (EVSYS) enables direct peripheral-to-peripheral signaling. It allows a change in one peripheral (the event generator) to trigger actions in other peripherals (the event users) through event channels, without using the CPU. It is designed to provide a short and predictable response time between peripherals, allowing for autonomous peripheral control and interaction, and for synchronized timing of actions in several peripheral modules. Thus, it is a powerful tool for reducing the complexity, size, and execution time of the software.

A change of the event generator's state is referred to as an event and usually corresponds to one of the peripheral's interrupt conditions. Events can be forwarded directly to other peripherals using the dedicated event routing network. The routing of each channel is configured in software, including event generation and use.

Only one event signal can be routed on each channel. Multiple peripherals can use events from the same channel.

The EVSYS can connect peripherals such as ADCs, analog comparators, I/O PORT pins, the real-time counter, timer/counters, and the configurable custom logic peripheral. Events can also be generated from software.

15.2.1 Block Diagram

Figure 15-1. Block Diagram

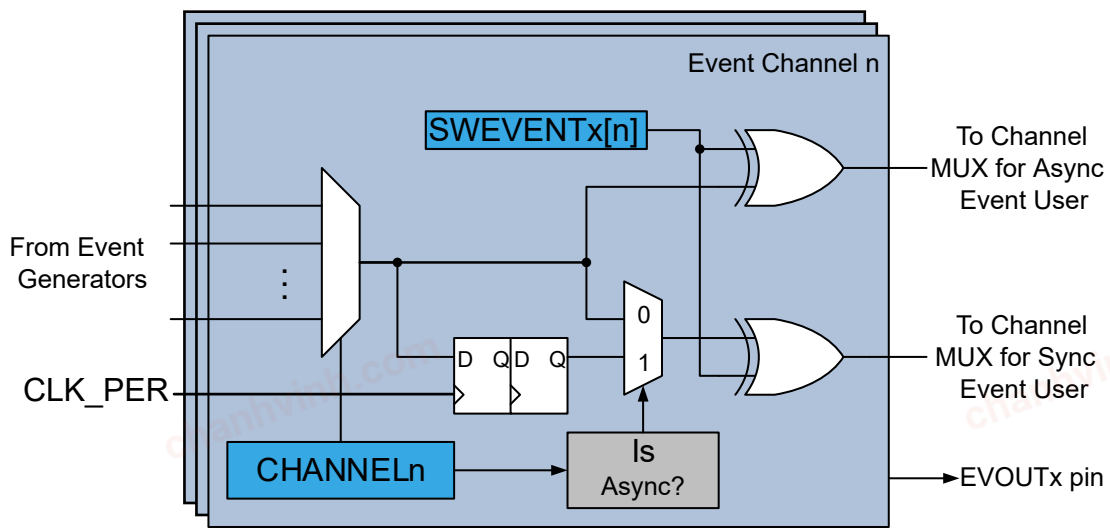

The block diagram shows the operation of an event channel. A multiplexer controlled by Channel n Generator Selection (EVSYS.CHANNELn) register at the input selects which of the event sources to route onto the event channel. Each event channel has two subchannels: one asynchronous and one synchronous. A synchronous user will listen to the synchronous subchannel, and an asynchronous user will listen to the asynchronous subchannel.

chanhvinh.com

An event signal from an asynchronous source will be synchronized by the Event System before being routed to the synchronous subchannel. An asynchronous event signal to be used by a synchronous consumer must last for at least one peripheral clock cycle to ensure that it will propagate through the synchronizer. The synchronizer will delay such an event between two and three clock cycles, depending on when the event occurs.

Figure 15-2. Example of Event Source, Generator, User, and Action

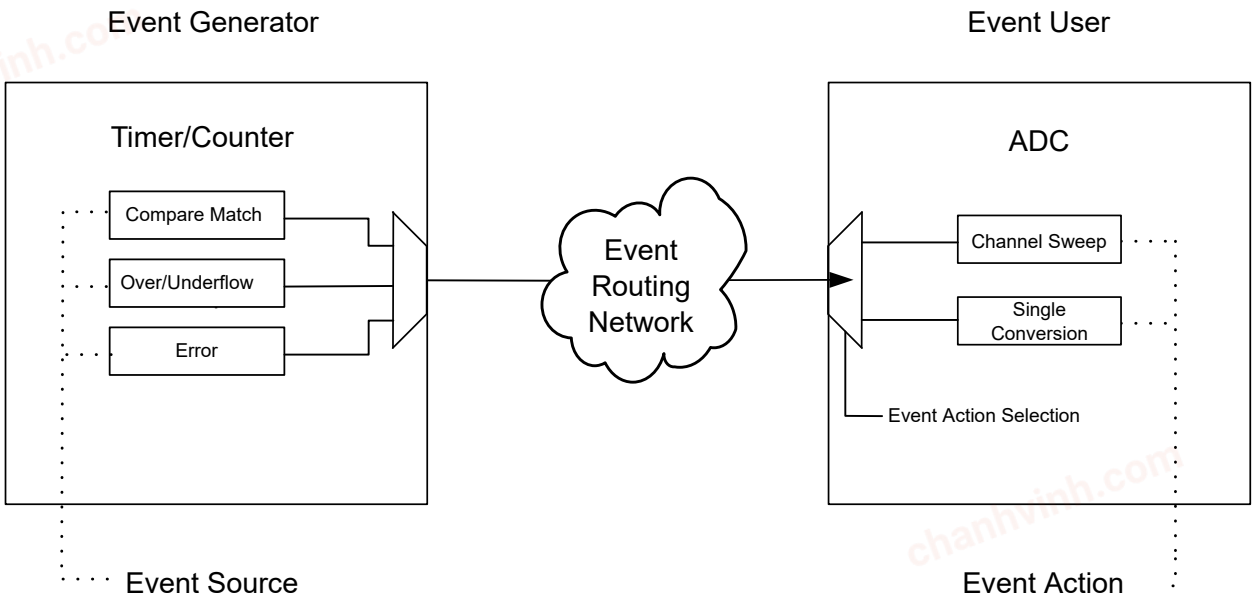

15.2.2 Signal Description

Signal	Type	Description
EVOUTx	Digital output	Event output, one output per I/O Port

15.3 Functional Description

15.3.1 Initialization

To utilize events, the Event System, the generating peripheral, and the peripheral(s) using the event must be set up accordingly:

1. Configure the generating peripheral appropriately. For example, if the generating peripheral is a timer, set the prescaling, the Compare register, etc., so that the desired event is generated.
2. Configure the event user peripheral(s) appropriately. For example, if the ADC is the event user, set the ADC prescaler, resolution, conversion time, etc., as desired, and configure the ADC conversion to start at the reception of an event.
3. Configure the Event System to route the desired source. In this case, the Timer/Compare match to the desired event channel. This may, for example, be Channel 0, which is accomplished by writing to the Channel 0 Generator Selection (EVSYS.CHANNEL0) register.
4. Configure the ADC to listen to this channel by writing to the corresponding User x Channel MUX (EVSYS.USERx) register.

15.3.2 Operation

15.3.2.1 Event User Multiplexer Setup

Each event user has one dedicated event user multiplexer selecting which event channel to listen to. The application configures these multiplexers by writing to the corresponding EVSYS.USERx register.

© 2021 Microchip Technology Inc.
and its subsidiaries

chanhvinh.com

15.3.2.2 Event System Channel

An event channel can be connected to one of the event generators.

The source for each event channel is configured by writing to the respective Channel n Generator Selection (EVSYS.CHANNELn) register.

15.3.2.3 Event Generators

Each event channel has several possible event generators, but only one can be selected at a time. The event generator for a channel is selected by writing to the respective Channel n Generator Selection (EVSYS.CHANNELn) register. By default, the channels are not connected to any event generator. For details on event generation, refer to the documentation of the corresponding peripheral.

A generated event is either synchronous or asynchronous to the device peripheral clock (CLK_PER). Asynchronous events can be generated outside the normal edges of the peripheral clock, making the system respond faster than the selected clock frequency would suggest. Asynchronous events can also be generated while the device is in a sleep mode when the peripheral clock is not running.

Any generated event is classified as either a pulse event or a level event. In both cases, the event can be either synchronous or asynchronous, with properties according to the table below.

Table 15-1. Properties of Generated Events

Event Type	Sync/Async	Description
Pulse	Sync	An event generated from CLK_PER that lasts one clock cycle
	Async	An event generated from a clock other than CLK_PER lasting one clock cycle
Level	Sync	An event generated from CLK_PER that lasts multiple clock cycles
	Async	An event generated without a clock (for example, a pin or a comparator), or an event generated from a clock other than CLK_PER that lasts multiple clock cycles

The properties of both the generated event and the intended event user must be considered in order to ensure reliable and predictable operation.

The table below shows the available event generators for this device family.

Table 15-2. Event Generators

Generator Name		Description	Event Type	Generating Clock Domain	Length of event
Peripheral	Event				
UPDI	SYNCH	SYNCH character	Level	CLK_PDI	SYNCH character on PDI RX input synchronized to CLK_PDI

chanhvinh.com

.....continued

Generator Name		Description	Event Type	Generating Clock Domain	Length of event
Peripheral	Event				
RTC	OVF	Overflow	Pulse	CLK_RTC	One CLK_RTC period
	CMP	Compare Match			
	PIT_DIV8192	Prescaled RTC clock divided by 8192	Level		Given by prescaled RTC clock divided by 8192
	PIT_DIV4096	Prescaled RTC clock divided by 4096			Given by prescaled RTC clock divided by 4096
	PIT_DIV2048	Prescaled RTC clock divided by 2048			Given by prescaled RTC clock divided by 2048
	PIT_DIV1024	Prescaled RTC clock divided by 1024			Given by prescaled RTC clock divided by 1024
	PIT_DIV512	Prescaled RTC clock divided by 512			Given by prescaled RTC clock divided by 512
	PIT_DIV256	Prescaled RTC clock divided by 256			Given by prescaled RTC clock divided by 256
	PIT_DIV128	Prescaled RTC clock divided by 128			Given by prescaled RTC clock divided by 128
	PIT_DIV64	Prescaled RTC clock divided by 64			Given by prescaled RTC clock divided by 64
CCL	LUTn	LUT output level	Level	Asynchronous	Depends on CCL configuration
ACn	OUT	Comparator output level	Level	Asynchronous	Given by AC output level
ADCn	RESRDY	Result ready	Pulse	CLK_PER	One CLK_PER period
PTC	RESRDY	Result ready	Pulse	CLK_PER	One CLK_PER period
ZCDn	OUT	ZCD output level	Level	Asynchronous	Given by ZCD output level
PORTx	PINn	Pin level	Level	Asynchronous	Given by pin level
USARTn	XCK	USART Baud clock	Level	CLK_PER	Minimum two CLK_PER periods
SPIn	SCK	SPI Host clock	Level	CLK_PER	Minimum two CLK_PER periods

© 2021 Microchip Technology Inc.
and its subsidiaries

chanhvinh.com

.....continued

Generator Name		Description	Event Type	Generating Clock Domain	Length of event
Peripheral	Event				
TCAn	OVF_LUNF	Overflow/Low byte timer underflow	Pulse	CLK_PER	One CLK_PER period
	HUNF	High byte timer underflow			
	CMP0_LCMP0	Compare channel 0 match/Low byte timer compare channel 0 match			
	CMP1_LCMP1	Compare channel 1 match/Low byte timer compare channel 1 match			
	CMP2_LCMP2	Compare channel 2 match/Low byte timer compare channel 2 match			
TCBn	CAPT	CAPT flag set	Pulse	CLK_PER	One CLK_PER period
	OVF	Overflow			
TCDn	CMPBCLR	Counter matches CMPBCLR	Pulse	CLK_TCD	One CLK_TCD period
	CMPASET	Counter matches CMPASET			
	CMPBSET	Counter matches CMPBSET			
	PROGEV	Programmable event output			

15.3.2.4 Event Users

The event channel to listen to is selected by configuring the event user. An event user may require the event signal to be either synchronous or asynchronous to the peripheral clock. An asynchronous event user can respond to events in sleep modes when clocks are not running. Such events can be responded to outside the normal edges of the peripheral clock, making the event user respond faster than the clock frequency would suggest. For details on the requirements of each peripheral, refer to the documentation of the corresponding peripheral.

Most event users implement edge or level detection to trigger actions in the corresponding peripheral based on the incoming event signal. In both cases, a user can either be synchronous, which requires that the incoming event is generated from the peripheral clock (CLK_PER), or asynchronous, if not. Some asynchronous event users do not apply event input detection but use the event signal directly. The different event user properties are described in general in the table below.

Table 15-3. Properties of Event Users

Input Detection	Async/Sync	Description
Edge	Sync	An event user is triggered by an event edge and requires that the incoming event is generated from CLK_PER
	Async	An event user is triggered by an event edge and has asynchronous detection or an internal synchronizer
Level	Sync	An event user is triggered by an event level and requires that the incoming event is generated from CLK_PER
	Async	An event user is triggered by an event level and has asynchronous detection or an internal synchronizer
No detection	Async	An event user will use the event signal directly

© 2021 Microchip Technology Inc. and its subsidiaries

chanhvinh.com

The table below shows the available event users for this device family.

Table 15-4. Event Users

USER Name		Description	Input Detection	Async/Sync
Peripheral	Input			
CCL	LUTnx	LUTn input x or clock signal	No detection	Async
ADCn	START	ADC start on event	Edge	Async
PTC	START	PTC start on event	Edge	Async
EVSYS	EVOUTx	Forward event signal to pin	No detection	Async
USARTn	IRDA	IrDA mode input	Level	Sync
TCAn	CNTA	Count on positive event edge	Edge	Sync
		Count on any event edge	Edge	
		Count while event signal is high	Level	
		Event level controls count direction	Level	
	CNTB	Event level controls count direction	Level	Sync
		Restart counter on positive event edge	Edge	
		Restart counter on any event edge	Edge	
		Restart counter while event signal is high	Level	
TCBn	CAPT	Time-out check	Edge	Sync
		Input capture on event	Edge	
		Input capture frequency measurement	Edge	
		Input capture pulse-width measurement	Edge	
		Input capture frequency and pulse-width measurement	Edge	
		Single-shot	Edge	Both
	COUNT	Count on event	Edge	Sync
TCDn	INPUTA	Fault or capture	Level or edge	Async
	INPUTB			

15.3.2.5 Synchronization

Events can be either synchronous or asynchronous to the peripheral clock. Each Event System channel has two subchannels: one asynchronous and one synchronous.

The asynchronous subchannel is identical to the event output from the generator. If the event generator generates a signal asynchronous to the peripheral clock, the signal on the asynchronous subchannel will be asynchronous. If the event generator generates a signal synchronous to the peripheral clock, the signal on the asynchronous subchannel will also be synchronous.

The synchronous subchannel is identical to the event output from the generator, if the event generator generates a signal synchronous to the peripheral clock. If the event generator generates a signal asynchronous to the peripheral clock, this signal is first synchronized before being routed onto the synchronous subchannel. Depending on when it occurs, synchronization will delay the event by two to three clock cycles. The Event System automatically performs this synchronization if an asynchronous generator is selected for an event channel.

© 2021 Microchip Technology Inc.
and its subsidiaries

chanhvinh.com

15.3.2.6 Software Event

The application can generate a software event. Software events on Channel n are issued by writing a '1' to the Software Event Channel Select (CHANNEL[n]) bit in the Software Events (EVSYS.SWEVENTx) register. A software event appears as a pulse on the Event System channel, inverting the current event signal for one clock cycle.

Event users see software events as no different from those produced by event generating peripherals.

15.3.3 Sleep Mode Operation

When configured, the Event System will work in all sleep modes. Software events represent one exception since they require a peripheral clock.

Asynchronous event users are able to respond to an event without their clock running in Standby sleep mode. Synchronous event users require their clock to be running to be able to respond to events. Such users will only work in Idle sleep mode or in Standby sleep mode, if configured to run in Standby mode by setting the RUNSTDBY bit in the appropriate register.

Asynchronous event generators are able to generate an event without their clock running, that is, in Standby sleep mode. Synchronous event generators require their clock to be running to be able to generate events. Such generators will only work in Idle sleep mode or in Standby sleep mode, if configured to run in Standby mode by setting the RUNSTDBY bit in the appropriate register.

15.3.4 Debug Operation

This peripheral is unaffected by entering Debug mode.

chanhvinh.com

chanhvinh.com

15.4 Register Summary

Offset	Name	Bit Pos.	7	6	5	4	3	2	1	0
0x00	SWEVENTA	7:0	SWEVENTA[7:0]							
0x01	SWEVENTB	7:0	SWEVENTB[7:0]							
0x02 ... 0x0F	Reserved									
0x10	CHANNEL0	7:0	CHANNEL0[7:0]							
0x11	CHANNEL1	7:0	CHANNEL1[7:0]							
0x12	CHANNEL2	7:0	CHANNEL2[7:0]							
0x13	CHANNEL3	7:0	CHANNEL3[7:0]							
0x14	CHANNEL4	7:0	CHANNEL4[7:0]							
0x15	CHANNEL5	7:0	CHANNEL5[7:0]							
0x16	CHANNEL6	7:0	CHANNEL6[7:0]							
0x17	CHANNEL7	7:0	CHANNEL7[7:0]							
0x18	CHANNEL8	7:0	CHANNEL8[7:0]							
0x19	CHANNEL9	7:0	CHANNEL9[7:0]							
0x1A ... 0x1F	Reserved									
0x20	USERCCLLUT0A	7:0	USER[7:0]							
...										
0x4A	USERTCD0INPUTB	7:0	USER[7:0]							

15.5 Register Description

chanhvinh.com

15.5.1 Software Events

Name: SWEVENTx
Offset: 0x00 + x*0x01 [x=0..1]
Reset: 0x00
Property: -

Write bits in this register to create a software event on the corresponding event channels.
Bits 0-7 in the EVSYS.SWEVENTA register correspond to event channels 0-7. If the number of available event channels is between eight and 15, these are available in the EVSYS.SWEVENTB register, where bit n corresponds to event channel 8+n.

Refer to the *Peripheral Overview* section for the available number of Event System channels.

Bit	7	6	5	4	3	2	1	0
	SWEVENTx[7:0]							
Access	W	W	W	W	W	W	W	W
Reset	0	0	0	0	0	0	0	0

Bits 7:0 – SWEVENTx[7:0] Software Event Channel Select
Writing a bit in this bit group to '1' will generate a single-pulse event on the corresponding event channel by inverting the signal on the event channel for one peripheral clock cycle.

chanhvinh.com

15.5.2 Channel n Generator Selection

Name: CHANNELn
Offset: 0x10 + n*0x01 [n=0..9]
Reset: 0x00
Property: -

Each channel can be connected to one event generator. Not all generators can be connected to all channels. Refer to the table below to see which generator sources can be routed onto each channel and the generator value to be written to EVSYS.CHANNELn to achieve this routing. Writing the value 0x00 to EVSYS.CHANNELn turns the channel off.

Bit	7	6	5	4	3	2	1	0
	CHANNELn[7:0]							
Access	R/W	R/W	R/W	R/W	R/W	R/W	R/W	R/W
Reset	0	0	0	0	0	0	0	0

Bits 7:0 – CHANNELn[7:0] Channel Generator Selection
The specific generator name corresponding to each bit group configuration is given by combining Peripheral and Output from the table below in the following way: PERIPHERAL_OUTPUT.

GENERATOR			Async/Sync	Description	Channel Availability
Value	Name				
	Peripheral	Output			
0x01	UPDI	SYNCH	Sync	Rising edge of SYNCH character detection	All channels
0x06	RTC	OVF	Async	Counter overflow	All channels
0x07		CMP		Compare match	
0x08		PIT_DIV8192		Prescaled RTC clock divided by 8192	Even numbered channels only
0x09		PIT_DIV4096		Prescaled RTC clock divided by 4096	
0x0A		PIT_DIV2048		Prescaled RTC clock divided by 2048	
0x0B		PIT_DIV1024		Prescaled RTC clock divided by 1024	
0x08		PIT_DIV512		Prescaled RTC clock divided by 512	Odd numbered channels only
0x09		PIT_DIV256		Prescaled RTC clock divided by 256	
0x0A		PIT_DIV128		Prescaled RTC clock divided by 128	
0x0B		PIT_DIV64		Prescaled RTC clock divided by 64	
0x10	CCL	LUT0	Async	LUT output level	All channels
0x11		LUT1			
0x12		LUT2			
0x13		LUT3			
0x14		LUT4(1)			
0x15		LUT5(1)			
0x20	AC0	OUT	Async	Comparator output level	All channels
0x21	AC1				
0x22	AC2				
0x24	ADC0	RESRDY	Sync	Result ready	All channels
0x28	PTC	RESRDY	Sync	Result ready	All channels
0x30	ZCD0	OUT	Async	ZCD output level	All channels
0x31	ZCD1(1)				
0x32	ZCD2(1)				
0x40-0x47	PORTA	PIN0-PIN7	Async	Pin level(2)	CHANNEL0 and CHANNEL1 only
0x48-0x4F	PORTB(1)				
0x40-0x47	PORTC	PIN0-PIN7	Async	PIN level(2)	CHANNEL2 and CHANNEL3 only
0x48-0x4F	PORTD				
0x40-0x47	PORTE (1)	PIN0-PIN7	Async	Pin level (2)	CHANNEL4 and CHANNEL5 only
0x48-0x4F	PORTF				
0x40-0x47	PORTG(1)	PIN0-PIN7	Async	Pin level (2)	CHANNEL6 and CHANNEL7 only
0x60	USART0	XCK	Sync	Clock signal in SPI Host mode and synchronous USART Host mode	All channels
0x61	USART1				
0x62	USART2				
0x63	USART3(1)				
0x64	USART4(1)				
0x65	USART5(1)				

© 2021 Microchip Technology Inc. and its subsidiaries

chanhvinh.com

.....continued

GENERATOR			Async/Sync	Description	Channel Availability
Value	Name				
	Peripheral	Output			
0x68	SPI0	SCK	Sync	SPI Host clock signal	All channels
0x69	SPI1				
0x80	TCA0	OVF_LUNF	Sync	Overflow/Low byte timer underflow	All channels
0x81		HUNF	Sync	High byte timer underflow	
0x84		CMP0_LCMP0	Sync	Compare channel 0 match/Low byte timer compare channel 0 match	
0x85		CMP1_LCMP1	Sync	Compare channel 1 match/Low byte timer compare channel 1 match	
0x86		CMP2_LCMP2	Sync	Compare channel 2 match/Low byte timer compare channel 2 match	
0x88	TCA1(1)	OVF_LUNF	Sync	Overflow/Low byte timer underflow	All channels
0x89		HUNF		High byte timer underflow	
0x8C		CMP0_LCMP0		Compare channel 0 match/Low byte timer compare channel 0 match	
0x8D		CMP1_LCMP1		Compare channel 1 match/Low byte timer compare channel 1 match	
0x8E		CMP2_LCMP2		Compare channel 2 match/Low byte timer compare channel 2 match	
0xA0	TCB0	CAPT	Sync	CAPT Interrupt flag set(3)	All channels
0xA1		OVF		Counter overflow	
0xA2	TCB1	CAPT	Sync	CAPT Interrupt flag set(3)	All channels
0xA3		OVF		Counter overflow	
0xA4	TCB2	CAPT	Sync	CAPT interrupt flag set(3)	All channels
0xA5		OVF		Counter overflow	
0xA6	TCB3(1)	CAPT	Sync	CAPT interrupt flag set(3)	All channels
0xA7		OVF		Counter overflow	
0xA8	TCB4(1)	CAPT	Sync	CAPT interrupt flag set (3)	All channels
0xA9		OVF		Counter overflow	
0xB0	TCD0	CMPBCLR	Async	Counter matches CMPBCLR	All channels
0xB1		CMPASET		Counter matches CMPASET	
0xB2		CMPBSET		Counter matches CMPBSET	
0xB3		PROGEV		Programmable event output	

Notes:

1. Not all peripheral instances are available for all pin counts. Refer to the *Peripherals and Architecture* section for details.
2. Event from PORT pin will be zero if the input driver is disabled.
3. The operational mode of the timer decides when the CAPT flag is raised. See the *16-bit Timer/Counter Type B (TCB)* section for details.

© 2021 Microchip Technology Inc. and its subsidiaries

chanhvinh.com

15.5.3 User Channel MUX

Name: USER
Offset: 0x20 + n*0x01 [n=0..42]
Reset: 0x00
Property: -

Each event user can be connected to one channel and several users can be connected to the same channel. The following table lists all Event System users with their corresponding user ID number and name. The user name is given by combining USER with Peripheral and Input from the table below in the following way: USERPERIPHERALINPUT.

USER #	User Name		Async/ Sync	Description
	Module	Input		
0x00	CCL	LUT0A	Async	CCL LUT0 event input A
0x01		LUT0B		CCL LUT0 event input B
0x02		LUT1A		CCL LUT1 event input A
0x03		LUT1B		CCL LUT1 event input B
0x04		LUT2A		CCL LUT2 event input A
0x05		LUT2B		CCL LUT2 event input B
0x06		LUT3A		CCL LUT3 event input A
0x07		LUT3B		CCL LUT3 event input B
0x08		LUT4A(1)		CCL LUT4 event input A
0x09		LUT4B(1)		CCL LUT4 event input B
0x0A		LUT5A(1)		CCL LUT5 event input A
0x0B		LUT5B (1)		CCL LUT5 event input B
0x0C	ADC0	START	Async	ADC start on event
0x0D	PTC	START	Async	PTC start on event
0x0E	EVSYS	EVOUTA	Async	EVSYS pin output A
0x0F		EVOUTB(1)		Event output B
0x10		EVOUTC		Event output C
0x11		EVOUTD		Event output D
0x12		EVOUTE(1)		Event output E
0x13		EVOUTF(1)		Event output F
0x14		EVOUTG (1)		Event output G
0x15	USART0	IRDA	Sync	USART0 IrDA event input
0x16	USART1	IRDA		USART1 IrDA event input
0x17	USART2	IRDA		USART2 IrDA event input
0x18	USART3	IRDA		USART3 IrDA event input
0x19	USART4	IRDA		USART4 IrDA event input
0x1A	USART5	IRDA		USART5 IrDA event input

© 2021 Microchip Technology Inc. and its subsidiaries

chanhvinh.com

.....continued

USER #	User Name		Async/ Sync	Description
	Module	Input		
0x1B	TCA0	CNTA	Sync	Count on event or control count direction
0x1C		CNTB		Restart on event or control count direction
0x1D	TCA1(1)	CNTA	Sync	Count on event or control count direction
0x1E		CNTB		Restart on event or control count direction
0x1F	TCB0	CAPT	Both(2)	Start, stop, capture, restart or clear counter
0x20		COUNT	Sync	Count on event
0x21	TCB1	CAPT	Both(2)	Start, stop, capture, restart or clear counter
0x22		COUNT	Sync	Count on event
0x23	TCB2	CAPT	Both(2)	Start, stop, capture, restart or clear counter
0x24		COUNT	Sync	Count on event
0x25	TCB3(1)	CAPT	Both(2)	Start, stop, capture, restart or clear counter
0x26		COUNT	Sync	Count on event
0x27	TCB4(1)	CAPT	Both(2)	Start, stop, capture, restart or clear counter
0x28		COUNT	Sync	Count on event
0x29	TCD0	INPUTA	Async	Fault or capture
0x2A		INPUTB		Fault or capture

Notes:

1. Not all peripheral instances are available for all pin counts. Refer to the *Peripherals and Architecture* section for details.
2. Depends on the timer operational mode.

Bit	7	6	5	4	3	2	1	0
	USER[7:0]							
Access	R/W	R/W	R/W	R/W	R/W	R/W	R/W	R/W
Reset	0	0	0	0	0	0	0	0

Bits 7:0 – USER[7:0] User Channel Selection

Configures which Event System channel the user is connected to.

Value	Description
0	OFF, no channel is connected to this Event System user
n	The event user is connected to CHANNEL(n-1)

chanhvinh.com

16. PORTMUX - Port Multiplexer

16.1 Overview

The Port Multiplexer (PORTMUX) can either enable or disable the functionality of the pins, or change between default and alternative pin positions. Available options are described in detail in the PORTMUX register map and depend on the actual pin and its properties.

For available pins and functionality, refer to the *I/O Multiplexing and Considerations* section.

chanhvinh.com

16.2 Register Summary

Offset	Name	Bit Pos.	7	6	5	4	3	2	1	0
0x00	EVSYSROUTEA	7:0		EVOUTG	EVOUTF	EVOUTE	EVOUTD	EVOUTC	EVOUTB	EVOUTA
0x01	CCLROUTEA	7:0			LUT5	LUT4	LUT3	LUT2	LUT1	LUT0
0x02	USARTROUTEA	7:0	USART3[1:0]		USART2[1:0]		USART1[1:0]		USART0[1:0]	
0x03	USARTROUTEB	7:0					USART5[1:0]		USART4[1:0]	
0x04	SPIROUTEA	7:0					SPI1[1:0]		SPI0[1:0]	
0x05	TWIROUTEA	7:0					TWI1[1:0]		TWI0[1:0]	
0x06	TCAROUTEA	7:0			TCA1[2:0]			TCA0[2:0]		
0x07	TCBROUTEA	7:0				TCB4	TCB3	TCB2	TCB1	TCB0
0x08	TCDROUTEA	7:0						TCD0[2:0]		
0x09	ACROUTEA	7:0						AC2	AC1	AC0
0x0A	ZCDROUTEA	7:0						ZCD2	ZCD1	ZCD0

16.3 Register Description

© 2021 Microchip Technology Inc.
and its subsidiaries

chanhvinh.com

16.3.1 EVSYS Pin Position

Name: EVSYSROUTEA
Offset: 0x00
Reset: 0x00
Property: -

Bit	7	6	5	4	3	2	1	0
		EVOUTG	EVOUTF	EVOUTE	EVOUTD	EVOUTC	EVOUTB	EVOUTA
Access		R/W	R/W	R/W	R/W	R/W	R/W	R/W
Reset		0	0	0	0	0	0	0

Bit 6 – EVOUTG Event Output G
This bit controls the pin position for event output G.

Value	Name	Description
0x0	DEFAULT	EVOUT on PG2
0x1	ALT1	EVOUT on PG7

Bit 5 – EVOUTF Event Output F
This bit controls the pin position for event output F.

Value	Name	Description
0x0	DEFAULT	EVOUT on PF2
0x1	ALT1	-

Bit 4 – EVOUTE Event Output E
This bit controls the pin position for event output E.

Value	Name	Description
0x0	DEFAULT	EVOUT on PE2
0x1	ALT1	EVOUT on PE7

Bit 3 – EVOUTD Event Output D
This bit controls the pin position for event output D.

Value	Name	Description
0x0	DEFAULT	EVOUT on PD2
0x1	ALT1	EVOUT on PD7

Bit 2 – EVOUTC Event Output C
This bit controls the pin position for event output C.

Value	Name	Description
0x0	DEFAULT	EVOUT on PC2
0x1	ALT1	EVOUT on PC7

Bit 1 – EVOUTB Event Output B
This bit controls the pin position for event output B.

Value	Name	Description
0x0	DEFAULT	EVOUT on PB2
0x1	ALT1	EVOUT on PB7

Bit 0 – EVOUTA Event Output A
This bit controls the pin position for event output A.

© 2021 Microchip Technology Inc.
and its subsidiaries

chanhvinh.com

Value	Name	Description
0x0	DEFAULT	EVOUT on PA2
0x1	ALT1	EVOUT on PA7

chanhvinh.com

chanhvinh.com

16.3.2 CCL LUTn Pin Position

Name: CCLROUTEA
Offset: 0x01
Reset: 0x00
Property: -

Bit	7	6	5	4	3	2	1	0
			LUT5	LUT4	LUT3	LUT2	LUT1	LUT0
Access			R/W	R/W	R/W	R/W	R/W	R/W
Reset			0	0	0	0	0	0

Bit 5 – LUT5 CCL LUT 5 Signals
This bit field controls the pin positions for CCL LUT 5 signals.

Value	Name	Description			
		OUT	IN0	IN1	IN2
0x0	DEFAULT	PG3	PG0	PG1	PG2
0x1	ALT1	PG6	PG0	PG1	PG2

Bit 4 – LUT4 CCL LUT 4 Signals
This bit field controls the pin positions for CCL LUT 4 signals.

Value	Name	Description			
		OUT	IN0	IN1	IN2
0x0	DEFAULT	PB3	PB0	PB1	PB2
0x1	ALT1	PB6	PB0	PB1	PB2

Bit 3 – LUT3 CCL LUT 3 Signals
This bit field controls the pin positions for CCL LUT 3 signals.

Value	Name	Description			
		OUT	IN0	IN1	IN2
0x0	DEFAULT	PF3	PF0	PF1	PF2
0x1	-	-	-	-	-

Bit 2 – LUT2 CCL LUT 2 Signals
This bit field controls the pin positions for CCL LUT 2 signals.

Value	Name	Description			
		OUT	IN0	IN1	IN2
0x0	DEFAULT	PD3	PD0	PD1	PD2
0x1	ALT1	PD6	PD0	PD1	PD2

Bit 1 – LUT1 CCL LUT 1 Signals
This bit field controls the pin positions for CCL LUT 1 signals.

Value	Name	Description			
		OUT	IN0	IN1	IN2
0x0	DEFAULT	PC3	PC0	PC1	PC2
0x1	ALT1	PC6	PC0	PC1	PC2

© 2021 Microchip Technology Inc.
and its subsidiaries

chanhvinh.com

Bit 0 – LUT0 CCL LUT 0 Signals
This bit field controls the pin positions for CCL LUT 0 signals.

Value	Name	Description			
		OUT	IN0	IN1	IN2
0x0	DEFAULT	PA3	PA0	PA1	PA2
0x1	ALT1	PA6	PA0	PA1	PA2

chanhvinh.com

16.3.3 USARTn Pin Position

Name: USARTROUTEA
Offset: 0x02
Reset: 0x00
Property: -

Bit	7	6	5	4	3	2	1	0
	USART3[1:0]		USART2[1:0]		USART1[1:0]		USART0[1:0]	
Access	R/W	R/W	R/W	R/W	R/W	R/W	R/W	R/W
Reset	0	0	0	0	0	0	0	0

Bits 7:6 – USART3[1:0] USART 3 Signals
This bit field controls the pin positions for USART 3 signals.

Value	Name	Description			
		TxD	RxD	XCK	XDIR
0x0	DEFAULT	PB0	PB1	PB2	PB3
0x1	ALT1	PB4	PB5	PB6	PB7
0x2	-	Reserved			
0x3	NONE	Not connected to any pins			

Bits 5:4 – USART2[1:0] USART 2 Signals
This bit field controls the pin positions for USART 2 signals.

Value	Name	Description			
		TxD	RxD	XCK	XDIR
0x0	DEFAULT	PF0	PF1	PF2	PF3
0x1	ALT1	PF4	PF5	-	-
0x2	-	Reserved			
0x3	NONE	Not connected to any pins			

Bits 3:2 – USART1[1:0] USART 1 Signals
This bit field controls the pin positions for USART 1 signals.

Value	Name	Description			
		TxD	RxD	XCK	XDIR
0x0	DEFAULT	PC0	PC1	PC2	PC3
0x1	ALT1	PC4	PC5	PC6	PC7
0x2	-	Reserved			
0x3	NONE	Not connected to any pins			

Bits 1:0 – USART0[1:0] USART 0 Signals
This bit field controls the pin positions for USART 0 signals.

Value	Name	Description			
		TxD	RxD	XCK	XDIR
0x0	DEFAULT	PA0	PA1	PA2	PA3
0x1	ALT1	PA4	PA5	PA6	PA7
0x2	-	Reserved			
0x3	NONE	Not connected to any pins			

© 2021 Microchip Technology Inc.
and its subsidiaries

chanhvinh.com

16.3.4 USARTn Pin Position

Name: USARTROUTEB
Offset: 0x03
Reset: 0x00
Property: -

Bit	7	6	5	4	3	2	1	0
					USART5[1:0]		USART4[1:0]	
Access					R/W	R/W	R/W	R/W
Reset					0	0	0	0

Bits 3:2 – USART5[1:0] USART 5 Signals
This bit field controls the pin positions for USART 5 signals.

Value	Name	Description			
		TxD	RxD	XCK	XDIR
0x0	DEFAULT	PG0	PG1	PG2	PG3
0x1	ALT1	PG4	PG5	PG6	PG7
0x2	-	Reserved			
0x3	NONE	Not connected to any pins			

Bits 1:0 – USART4[1:0] USART 4 Signals
This bit field controls the pin positions for USART 4 signals.

Value	Name	Description			
		TxD	RxD	XCK	XDIR
0x0	DEFAULT	PE0	PE1	PE2	PE3
0x1	ALT1	PE4	PE5	PE6	PE7
0x2	-	Reserved			
0x3	NONE	Not connected to any pins			

© 2021 Microchip Technology Inc.
and its subsidiaries

chanhvinh.com

16.3.5 SPIn Pin Position

Name: SPIROUTEA
Offset: 0x04
Reset: 0x00
Property: -

Bit	7	6	5	4	3	2	1	0
					SPI1[1:0]		SPI0[1:0]	
Access					R/W	R/W	R/W	R/W
Reset					0	0	0	0

Bits 3:2 – SPI1[1:0] SPI 1 Signals
This bit field controls the pin positions for SPI 1 signals.

Value	Name	Description			
		MOSI	MISO	SCK	$\overline{SS}$
0x0	DEFAULT	PC0	PC1	PC2	PC3
0x1	ALT1	PC4	PC5	PC6	PC7
0x2	ALT2	PB4	PB5	PB6	PB7
0x3	NONE	Not connected to any pins			

Bits 1:0 – SPI0[1:0] SPI 0 Signals
This bit field controls the pin positions for SPI 0 signals.

Value	Name	Description			
		MOSI	MISO	SCK	$\overline{SS}$
0x0	DEFAULT	PA4	PA5	PA6	PA7
0x1	ALT1	PE0	PE1	PE2	PE3
0x2	ALT2	PG4	PG5	PG6	PG7
0x3	NONE	Not connected to any pins			

chanhvinh.com

16.3.6 TWIn Pin Position

Name: TWIROUTEA
Offset: 0x05
Reset: 0x00
Property: -

Bit	7	6	5	4	3	2	1	0
					TWI1[1:0]		TWI0[1:0]	
Access					R/W	R/W	R/W	R/W
Reset					0	0	0	0

Bits 3:2 – TWI1[1:0] TWI 1 Signals
This bit field controls the pin positions for TWI 1 signals.

Value	Name	Description			
		Host/Client		Dual mode (Client)	
		SDA	SCL	SDA	SCL
0x0	DEFAULT	PF2	PF3	PB2	PB3
0x1	ALT1	PF2	PF3	PB6	PB7
0x2	ALT2	PB2	PB3	PB6	PB7
0x3	-	Reserved			

Bits 1:0 – TWI0[1:0] TWI 0 Signals
This bit field controls the pin positions for TWI 0 signals.

Value	Name	Description			
		Host/Client		Dual mode (Client)	
		SDA	SCL	SDA	SCL
0x0	DEFAULT	PA2	PA3	PC2	PC3
0x1	ALT1	PA2	PA3	PC6	PC7
0x2	ALT2	PC2	PC3	PC6	PC7
0x3	-	Reserved			

© 2021 Microchip Technology Inc.
and its subsidiaries

chanhvinh.com

16.3.7 TCAn Pin Position

Name: TCAROUTEA
Offset: 0x06
Reset: 0x00
Property: -

Bit	7	6	5	4	3	2	1	0
			TCA1[2:0]			TCA0[2:0]		
Access			R/W	R/W	R/W	R/W	R/W	R/W
Reset			0	0	0	0	0	0

Bits 5:3 – TCA1[2:0] TCA1 Signals
This bit field controls the pin positions for TCA1 signals.

Value	Name	Description					
		WO0	WO1	WO2	WO3	WO4	WO5
0x0	PORTB	PB0	PB1	PB2	PB3	PB4	PB5
0x1	PORTC	PC4	PC5	PC6	-	-	-
0x2	PORTE	PE4	PE5	PE6	-	-	-
0x3	PORTG	PG0	PG1	PG2	PG3	PG4	PG5
Other	-	Reserved					

Bits 2:0 – TCA0[2:0] TCA0 Signals
This bit field controls the pin positions for TCA0 signals.

Value	Name	Description					
		WO0	WO1	WO2	WO3	WO4	WO5
0x0	PORTA	PA0	PA1	PA2	PA3	PA4	PA5
0x1	PORTB	PB0	PB1	PB2	PB3	PB4	PB5
0x2	PORTC	PC0	PC1	PC2	PC3	PC4	PC5
0x3	PORTD	PD0	PD1	PD2	PD3	PD4	PD5
0x4	PORTE	PE0	PE1	PE2	PE3	PE4	PE5
0x5	PORTF	PF0	PF1	PF2	PF3	PF4	PF5
0x6	PORTG	PG0	PG1	PG2	PG3	PG4	PG5
0x7	-	Reserved					

© 2021 Microchip Technology Inc.
and its subsidiaries

chanhvinh.com

16.3.8 TCBn Pin Position

Name: TCBROUTEA
Offset: 0x07
Reset: 0x00
Property: -

Bit	7	6	5	4	3	2	1	0
				TCB4	TCB3	TCB2	TCB1	TCB0
Access				R/W	R/W	R/W	R/W	R/W
Reset				0	0	0	0	0

Bit 4 – TCB4 TCB4 Output
This bit controls the pin position for TCB4 output.

Value	Name	Description
0x0	DEFAULT	WO on PG3
0x1	ALT1	WO on PC6

Bit 3 – TCB3 TCB3 Output
This bit controls the pin position for TCB3 output.

Value	Name	Description
0x0	DEFAULT	WO on PB5
0x1	ALT1	WO on PC1

Bit 2 – TCB2 TCB2 Output
This bit controls the pin position for TCB2 output.

Value	Name	Description
0x0	DEFAULT	WO on PC0
0x1	ALT1	WO on PB4

Bit 1 – TCB1 TCB1 Output
This bit controls the pin position for TCB1 output.

Value	Name	Description
0x0	DEFAULT	WO on PA3
0x1	ALT1	WO on PF5

Bit 0 – TCB0 TCB0 Output
This bit controls the pin position for TCB0 output.

Value	Name	Description
0x0	DEFAULT	WO on PA2
0x1	ALT1	WO on PF4

© 2021 Microchip Technology Inc.
and its subsidiaries

chanhvinh.com

16.3.9 TCDn Pin Position

Name: TCDROUTEA
Offset: 0x08
Reset: 0x00
Property: -

Bit	7	6	5	4	3	2	1	0
						TCD0[2:0]		
Access						R/W	R/W	R/W
Reset						0	0	0

Bits 2:0 – TCD0[2:0] TCD0 Signals
This bit field controls the pin positions for TCD0 signals.

Value	Name	Description			
		WOA	WOB	WOC	WOD
0x0	DEFAULT	PA4	PA5	PA6	PA7
0x1	ALT1	PB4	PB5	PB6	PB7
0x2	ALT2	PF0	PF1	PF2	PF3
0x3	ALT3	PG4	PG5	PG6	PG7
Other	-	Reserved			

chanhvinh.com

16.3.10 ACn Pin Position

Name: ACROUTEA
Offset: 0x09
Reset: 0x00
Property: -

Bit	7	6	5	4	3	2	1	0
						AC2	AC1	AC0
Access						R/W	R/W	R/W
Reset						0	0	0

Bit 2 – AC2 Analog Comparator 2 Output
This bit controls the pin position for AC2 output.

Value	Name	Description
0x0	DEFAULT	OUT on PA7
0x1	ALT1	OUT on PC6

Bit 1 – AC1 Analog comparator 1 Output
This bit controls the pin position for AC1 output.

Value	Name	Description
0x0	DEFAULT	OUT on PA7
0x1	ALT1	OUT on PC6

Bit 0 – AC0 Analog Comparator 0 Output
This bit controls the pin position for AC0 output.

Value	Name	Description
0x0	DEFAULT	OUT on PA7
0x1	ALT1	OUT on PC6

© 2021 Microchip Technology Inc.
and its subsidiaries

chanhvinh.com

16.3.11 ZCDn Pin Position

Name: ZCDROUTEA
Offset: 0x0A
Reset: 0x00
Property: -

Bit	7	6	5	4	3	2	1	0
						ZCD2	ZCD1	ZCD0
Access						R/W	R/W	R/W
Reset						0	0	0

Bit 2 – ZCD2 Zero-Cross Detector 2 Output
This bit controls the pin position for ZCD2 output.

Value	Name	Description
0x0	DEFAULT	OUT on PA7
0x1	ALT1	OUT on PC7

Bit 1 – ZCD1 Zero-Cross Detector 1 Output
This bit controls the pin position for ZCD1 output.

Value	Name	Description
0x0	DEFAULT	OUT on PA7
0x1	ALT1	OUT on PC7

Bit 0 – ZCD0 Zero-Cross Detector 0 Output
This bit controls the pin position for ZCD0 output.

Value	Name	Description
0x0	DEFAULT	OUT on PA7
0x1	ALT1	OUT on PC7

chanhvinh.com

17. PORT - I/O Pin Configuration

17.1 Features

- General Purpose Input and Output Pins with Individual Configuration:
  - Pull-up
  - Inverted I/O
- Interrupts and Events:
  - Sense both edges
  - Sense rising edges
  - Sense falling edges
  - Sense low level
- Optional Slew Rate Control per I/O Port
- Asynchronous Pin Change Sensing that Can Wake the Device From all Sleep Modes
- Efficient and Safe Access to Port Pins
  - Hardware Read-Modify-Write (RMW) through dedicated toggle/clear/set registers
  - Mapping of often-used PORT registers into bit-accessible I/O memory space (virtual ports)

17.2 Overview

The device's I/O pins are controlled by instances of the PORT peripheral registers. Each PORT instance has up to eight I/O pins. The PORTs are named PORTA, PORTB, PORTC, etc. Refer to the *I/O Multiplexing and Considerations* section to see which pins are controlled by what instance of PORT. The base addresses of the PORT instances and the corresponding Virtual PORT instances are listed in the *Peripherals and Architecture* section.

Each PORT pin has a corresponding bit in the Data Direction (PORTx.DIR) and Data Output Value (PORTx.OUT) registers to enable that pin as an output and to define the output state. For example, pin PA3 is controlled by DIR[3] and OUT[3] of the PORTA instance.

The input value of a PORT pin is synchronized to the Peripheral Clock (CLK_PER) and then made accessible as the data input value (PORTx.IN). The pin value can be read whether the pin is configured as input or output.

The PORT also supports asynchronous input sensing with interrupts and events for selectable pin change conditions. Asynchronous pin change sensing means that a pin change can trigger an interrupt and wake the device from sleep, including sleep modes where CLK_PER is stopped.

All pin functions are individually configurable per pin. The pins have hardware RMW functionality for a safe and correct change of the drive values and/or input and sense configuration.

The PORT pin configuration controls the input and output selection of other device functions.

© 2021 Microchip Technology Inc.
and its subsidiaries

chanhvinh.com

17.2.1 Block Diagram

Figure 17-1. PORT Block Diagram

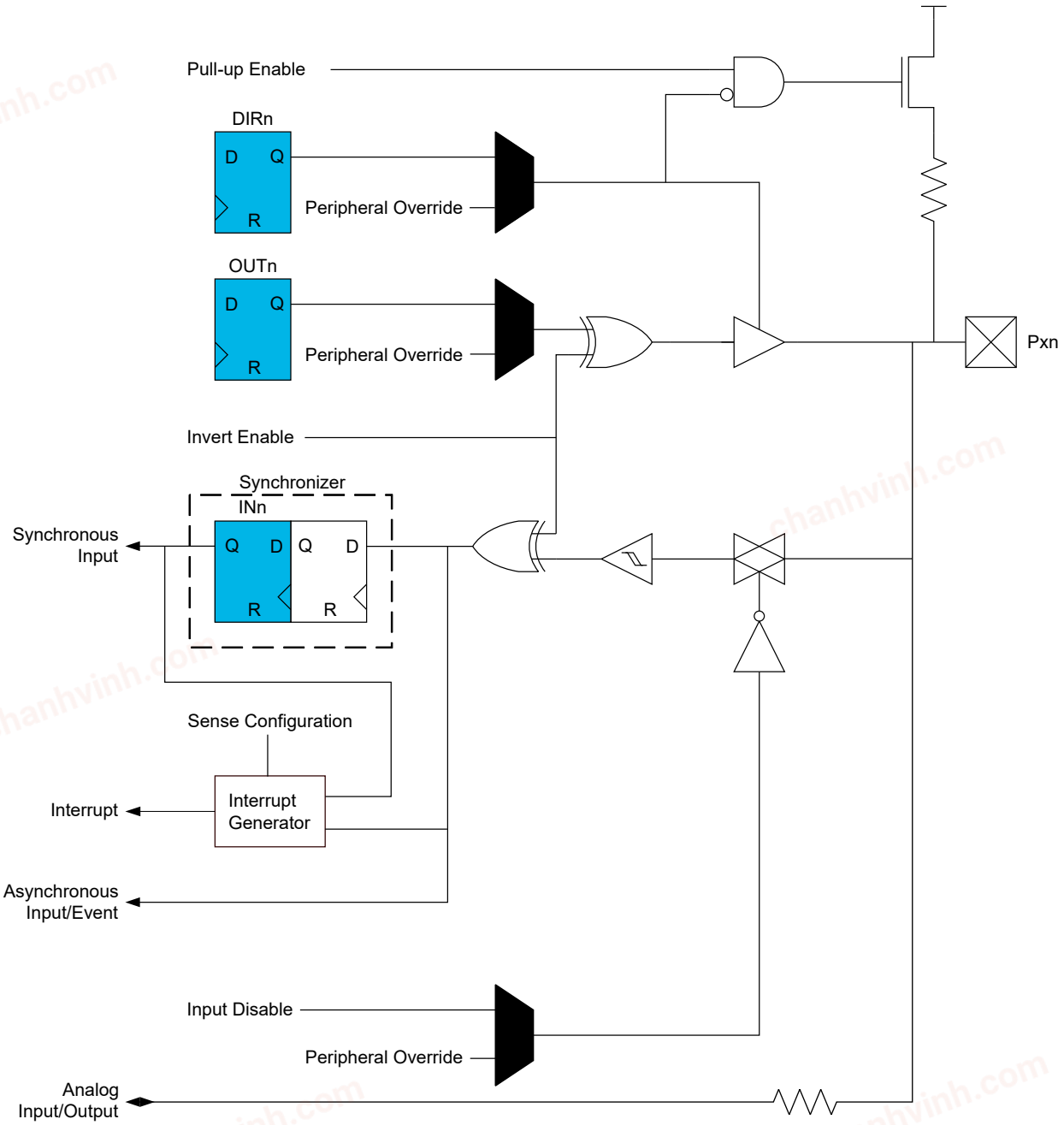

17.2.2 Signal Description

Signal	Type	Description
Pxn	I/O pin	I/O pin n on PORTx

chanhvinh.com

17.3 Functional Description

17.3.1 Initialization

After Reset, all outputs are tri-stated, and digital input buffers enabled even if there is no clock running.

The following steps are all optional when initializing PORT operation:

- Enable or disable the output driver for pin Pxn by respectively writing '1' to bit n in the PORTx.DIRSET or PORTx.DIRCLR register
- Set the output driver for pin Pxn to high or low level respectively by writing '1' to bit n in the PORTx.OUTSET or PORTx.OUTCLR register
- Read the input of pin Pxn by reading bit n in the PORTx.IN register
- Configure the individual pin configurations and interrupt control for pin Pxn in PORTx.PINnCTRL

Important: For the lowest possible power consumption, disable the digital input buffer of unused pins and pins are used as analog inputs or outputs. For pins with the digital input buffer enabled it is recommended to transition between the high and low voltage thresholds as quickly as possible.

Specific pins, such as those used to connect a debugger, may be configured differently, as required by their special function.

17.3.2 Operation

17.3.2.1 Basic Functions

Each pin group x has its own set of PORT registers. I/O pin Pxn can be controlled by the registers in PORTx.

To use pin number n as an output, write bit n of the PORTx.DIR register to '1'. This can be done by writing bit n in the PORTx.DIRSET register to '1', which will avoid disturbing the configuration of other pins in that group. The nth bit in the PORTx.OUT register must be written to the desired output value.

Similarly, writing a PORTx.OUTSET bit to '1' will set the corresponding bit in the PORTx.OUT register to '1'. Writing a bit in PORTx.OUTCLR to '1' will clear that bit in PORTx.OUT to '0'. Writing a bit in PORTx.OUTTGL or PORTx.IN to '1' will toggle that bit in PORTx.OUT.

To use pin n as an input, bit n in the PORTx.DIR register must be written to '0' to disable the output driver. This can be done by writing bit n in the PORTx.DIRCLR register to '1', which will avoid disturbing the configuration of other pins in that group. The input value can be read from bit n in the PORTx.IN register as long as the ISC bit is not set to INPUT_DISABLE.

Writing a bit to '1' in PORTx.DIRTGL will toggle that bit in PORTx.DIR and toggle the direction of the corresponding pin.

17.3.2.2 Port Configuration

The Port Control (PORTx.PORTCTRL) register is used to configure the slew rate limitation for all the PORTx pins.

The slew rate limitation is enabled by writing a '1' to the Slew Rate Limit Enable (SLR) bit in PORTx.PORTCTRL. Refer to the *Electrical Characteristics* section for further details.

17.3.2.3 Pin Configuration

The Pin n Control (PORTx.PINnCTRL) register is used to configure inverted I/O, pull-up, and input sensing of a pin. The control register for pin n is at the byte address $\mathrm{PORTx} + 0\mathrm{x}10 + n$.

All input and output on the respective pin n can be inverted by writing a '1' to the Inverted I/O Enable (INVEN) bit in PORTx.PINnCTRL. When INVEN is '1', the PORTx.IN/OUT/OUTSET/OUTTGL registers will have an inverted operation for this pin.

Toggling the INVEN bit causes an edge on the pin, which can be detected by all peripherals using this pin, and is seen by interrupts or events if enabled.

chanhvinh.com

The input pull-up of pin n is enabled by writing a '1' to the Pull-up Enable (PULLUPEN) bit in PORTx.PINnCTRL. The pull-up is disconnected when the pin is configured as an output, even if PULLUPEN is '1'.

Pin interrupts can be enabled for pin n by writing to the Input/Sense Configuration (ISC) bit field in PORTx.PINnCTRL. Refer to 17.3.3 Interrupts for further details.

The digital input buffer for pin n can be disabled by writing the INPUT_DISABLE setting to ISC. This can reduce power consumption and may reduce noise if the pin is used as analog input. While configured to INPUT_DISABLE, bit n in PORTx.IN will not change since the input synchronizer is disabled.

17.3.2.4 Multi-Pin Configuration

The multi-pin configuration function is used to configure multiple PORT pins in one operation. The wanted pin configuration is first written to the PORTx.PINCONFIG register, followed by a register write, with the selected pins to modify. This allows changing the configuration (PORTx.PINnCTRL) for up to eight pins in one write.

Tip: The PORTx.PINCONFIG register is mirrored on all ports, which allows the use of a single setting across multiple ports. The PORTx.PINCTRLUPD/SET/CLR registers are not mirrored and need to be applied to each port.

For the multi-pin configuration, PORT pins can be configured and modified by writing to the following registers.

Table 17-1. Multi-Pin Configuration Registers

Register	Description
PORTx.PINCONFIG	PINnCTRL (ISC, PULLUPEN and INVEN) setting to prepare simultaneous configuration of multiple PINnCTRL registers
PORTx.PINCTRLUPD	Writing a '1' to bit n in the PINCTRLUPD register will copy the PINCONFIG register content to the PINnCTRL register
PORTx.PINCTRLSET(1)	Writing a '1' to bit n in the PINCTRLSET register will set the individual bits in the PINnCTRL register, according to the bits set to '1' in the PINCONFIG register
PORTx.PINCTRLCLR(2)	Writing a '1' to bit n in the PINCTRLCLR register will clear the individual bits in the PINnCTRL register, according to the bits set to '1' in the PINCONFIG register

Notes:

1. Using PINCTRLSET to configure non-zero ISC bit fields will result in a bitwise OR with the PINCONFIG and PINnCTRL registers, which may give an unexpected setting.
2. Using PINCTRLCLR to configure non-zero ISC bit fields will result in a bitwise inverse AND with the PINCONFIG and PINnCTRL registers, which may give an unexpected setting.

The following code snippet demonstrates how to configure multiple PINnCTRL registers, of multiple ports.

Important: Because the PINCONFIG register is mirrored across all the ports, it is enough to only write it once, for PORT A, in this example.

```
PORTA.PINCONFIG = PORT_ISC_INPUT_DISABLE_gc; /* The setting to load to the PINnCTRL registers
*/
PORTA.PINCTRLUPD = 0xff;
PORTB.PINCTRLUPD = 0xff;
PORTC.PINCTRLUPD = 0xff;
PORTD.PINCTRLUPD = 0xff;
PORTE.PINCTRLUPD = 0xff;
```

17.3.2.5 Virtual Ports

The Virtual PORT registers map the most frequently used regular PORT registers into the I/O Register space with single-cycle bit access. Access to the Virtual PORT registers has the same outcome as access to the regular

© 2021 Microchip Technology Inc. and its subsidiaries

chanhvinh.com

registers but allows for memory-specific instructions, such as bit manipulation instructions, which cannot be used in the extended I/O Register space where the regular PORT registers reside. The following table shows the mapping between the PORT and VPORT registers.

Table 17-2. Virtual Port Mapping

Regular PORT Register	Mapped to Virtual PORT Register
PORTx.DIR	VPORTx.DIR
PORTx.OUT	VPORTx.OUT
PORTx.IN	VPORTx.IN
PORTx.INTFLAGS	VPORTx.INTFLAGS

Note: Avoid accessing the mapped VPORT register using the single-cycle I/O instructions immediately after accessing the regular PORT register. This may cause a memory collision since the single-cycle I/O access to VPORT is faster than the regular PORT register access.

17.3.2.6 Peripheral Override

Peripherals such as USARTs, ADCs and timers may be connected to I/O pins. Such peripherals will usually have a primary and, optionally, one or more alternate I/O pin connections, selectable by PORTMUX or a multiplexer inside the peripheral. By configuring and enabling such peripherals, the general purpose I/O pin behavior normally controlled by PORT will be overridden in a peripheral dependent way. Some peripherals may not override all the PORT registers, leaving the PORT module to control some aspects of the I/O pin operation.

Refer to the description of each peripheral for information on the peripheral override. Any pin in a PORT that is not overridden by a peripheral will continue to operate as a general purpose I/O pin.

17.3.3 Interrupts

Table 17-3. Available Interrupt Vectors and Sources

Name	Vector Description	Conditions
PORTx	PORT interrupt	INTn in PORTx.INTFLAGS is raised as configured by the Input/Sense Configuration (ISC) bit in PORTx.PINnCTRL

Each PORT pin n can be configured as an interrupt source. Each interrupt can be individually enabled or disabled by writing to ISC in PORTx.PINnCTRL.

When an interrupt condition occurs, the corresponding interrupt flag is set in the Interrupt Flags register of the peripheral (*peripheral*.INTFLAGS).

An interrupt request is generated when the corresponding interrupt source is enabled, and the interrupt flag is set. The interrupt request remains active until the interrupt flag is cleared. See the peripheral's INTFLAGS register for details on how to clear interrupt flags.

When setting or changing interrupt settings, take these points into account:

- If an Inverted I/O Enable (INVEN) bit is toggled in the same cycle as ISC is changed, the edge caused by the inversion toggling may not cause an interrupt request
- If an input is disabled by writing to ISC while synchronizing an interrupt, the interrupt may be requested on re-enabling the input, even if it is re-enabled with a different interrupt setting
- If the interrupt setting is changed by writing to ISC while synchronizing an interrupt, the interrupt may not be requested

17.3.3.1 Asynchronous Sensing Pin Properties

All PORT pins support asynchronous input sensing with interrupts for selectable pin change conditions. Fully asynchronous pin change sensing can trigger an interrupt and wake the device from all sleep modes, including modes where the Peripheral Clock (CLK_PER) is stopped, while partially asynchronous pin change sensing is limited as per the table below. See the *I/O Multiplexing and Considerations* section for further details on which pins support fully asynchronous pin change sensing.

© 2021 Microchip Technology Inc.
and its subsidiaries

chanhvinh.com

Table 17-4. Behavior Comparison of Sense Pins

Property	Partially Asynchronous Pins	Fully Asynchronous Pins
Waking the device from sleep modes with CLK_PER running	From all interrupt sense configurations	From all interrupt sense configurations
Waking the device from sleep modes with CLK_PER stopped	Only from BOTHEDGES or LEVEL interrupt sense configurations	
Minimum pulse-width to trigger an interrupt with CLK_PER running	Minimum one CLK_PER cycle	Less than one CLK_PER cycle
Minimum pulse-width to trigger an interrupt with CLK_PER stopped	The pin value must be kept until CLK_PER has restarted(1)	
Interrupt “dead-time”	No new interrupt for three CLK_PER cycles after the previous	

Note:

1. If a partially asynchronous input pin is used for wake-up from sleep with CLK_PER stopped, the required level must be held long enough for the MCU to complete the wake-up to trigger the interrupt. If the level disappears, the MCU can wake up without any interrupt generated.

17.3.4 Events

PORT can generate the following events:

Table 17-5. Event Generators in PORTx

Generator Name		Description	Event Type	Generating Clock Domain	Length of Event
Peripheral	Event				
PORTx	PINn	Pin level	Level	Asynchronous	Given by pin level

All PORT pins are asynchronous Event System generators. PORT has as many event generators as there are PORT pins in the device. Each Event System output from PORT is the value present on the corresponding pin if the digital input buffer is enabled. If a pin input buffer is disabled, the corresponding Event System output is zero.

PORT has no event inputs. Refer to the *Event System (EVSYS)* section for more details regarding event types and Event System configuration.

17.3.5 Sleep Mode Operation

Except for interrupts and input synchronization, all pin configurations are independent of sleep modes. All pins can wake the device from sleep. See the PORT Interrupt section for further details.

Peripherals connected to the PORTs can be affected by sleep modes, described in the respective peripherals’ data sheet section.

Important: The PORTs will always use the Peripheral Clock (CLK_PER). Input synchronization will halt when this clock stops.

17.3.6 Debug Operation

When the CPU is halted in Debug mode, the PORT continues normal operation. If the PORT is configured in a way that requires it to be periodically serviced by the CPU through interrupts or similar, improper operation or data loss may result during debugging.

chanhvinh.com

17.4 Register Summary - PORTx

Offset	Name	Bit Pos.	7	6	5	4	3	2	1	0
0x00	DIR	7:0	DIR[7:0]							
0x01	DIRSET	7:0	DIRSET[7:0]							
0x02	DIRCLR	7:0	DIRCLR[7:0]							
0x03	DIRTGL	7:0	DIRTGL[7:0]							
0x04	OUT	7:0	OUT[7:0]							
0x05	OUTSET	7:0	OUTSET[7:0]							
0x06	OUTCLR	7:0	OUTCLR[7:0]							
0x07	OUTTGL	7:0	OUTTGL[7:0]							
0x08	IN	7:0	IN[7:0]							
0x09	INTFLAGS	7:0	INT[7:0]							
0x0A	PORTCTRL	7:0								SRL
0x0B	PINCONFIG	7:0	INVEN				PULLUPEN	ISC[2:0]		
0x0C	PINCTRLUPD	7:0	PINCTRLUPD[7:0]							
0x0D	PINCTRLSET	7:0	PINCTRLSET[7:0]							
0x0E	PINCTRLCLR	7:0	PINCTRLCLR[7:0]							
0x0F	Reserved									
0x10	PIN0CTRL	7:0	INVEN				PULLUPEN	ISC[2:0]		
0x11	PIN1CTRL	7:0	INVEN				PULLUPEN	ISC[2:0]		
0x12	PIN2CTRL	7:0	INVEN				PULLUPEN	ISC[2:0]		
0x13	PIN3CTRL	7:0	INVEN				PULLUPEN	ISC[2:0]		
0x14	PIN4CTRL	7:0	INVEN				PULLUPEN	ISC[2:0]		
0x15	PIN5CTRL	7:0	INVEN				PULLUPEN	ISC[2:0]		
0x16	PIN6CTRL	7:0	INVEN				PULLUPEN	ISC[2:0]		
0x17	PIN7CTRL	7:0	INVEN				PULLUPEN	ISC[2:0]		

17.5 Register Description - PORTx

© 2021 Microchip Technology Inc.
and its subsidiaries

chanhvinh.com

17.5.1 Data Direction

Name: DIR
Offset: 0x00
Reset: 0x00
Property: -

Bit	7	6	5	4	3	2	1	0
	DIR[7:0]							
Access	R/W	R/W	R/W	R/W	R/W	R/W	R/W	R/W
Reset	0	0	0	0	0	0	0	0

Bits 7:0 – DIR[7:0] Data Direction
This bit field controls the output driver for each PORTx pin.
This bit field does not control the digital input buffer. The digital input buffer for pin n (Pxn) can be configured in the Input/Sense Configuration (ISC) bit field in the Pin n Control (PORTx.PINnCTRL) register.
The table below shows the available configuration for each bit n in this bit field.

Value	Description
0	Pxn is configured as an input-only pin, and the output driver is disabled
1	Pxn is configured as an output pin, and the output driver is enabled

chanhvinh.com

chanhvinh.com

17.5.2 Data Direction Set

Name: DIRSET
Offset: 0x01
Reset: 0x00
Property: -

Bit	7	6	5	4	3	2	1	0
	DIRSET[7:0]							
Access	R/W	R/W	R/W	R/W	R/W	R/W	R/W	R/W
Reset	0	0	0	0	0	0	0	0

Bits 7:0 – DIRSET[7:0] Data Direction Set
This bit field controls the output driver for each PORTx pin without using a read-modify-write operation.
Writing a '0' to bit n in this bit field has no effect.
Writing a '1' to bit n in this bit field will set the corresponding bit in PORTx.DIR, which will configure pin n (Pxn) as an output pin and enable the output driver.
Reading this bit field will return the value of PORTx.DIR.

chanhvinh.com

17.5.3 Data Direction Clear

Name: DIRCLR
Offset: 0x02
Reset: 0x00
Property: -

Bit	7	6	5	4	3	2	1	0
	DIRCLR[7:0]							
Access	R/W	R/W	R/W	R/W	R/W	R/W	R/W	R/W
Reset	0	0	0	0	0	0	0	0

Bits 7:0 – DIRCLR[7:0] Data Direction Clear
This bit field controls the output driver for each PORTx pin without using a read-modify-write operation.
Writing a '0' to bit n in this bit field has no effect.
Writing a '1' to bit n in this bit field will clear the corresponding bit in PORTx.DIR, which will configure pin n (Pxn) as an input-only pin and disable the output driver.
Reading this bit field will return the value of PORTx.DIR.

chanhvinh.com

17.5.4 Data Direction Toggle

Name: DIRTGL
Offset: 0x03
Reset: 0x00
Property: -

Bit	7	6	5	4	3	2	1	0
	DIRTGL[7:0]							
Access	R/W	R/W	R/W	R/W	R/W	R/W	R/W	R/W
Reset	0	0	0	0	0	0	0	0

Bits 7:0 – DIRTGL[7:0] Data Direction Toggle
This bit field controls the output driver for each PORTx pin without using a read-modify-write operation.
Writing a '0' to bit n in this bit field has no effect.
Writing a '1' to bit n in this bit field will toggle the corresponding bit in PORTx.DIR.
Reading this bit field will return the value of PORTx.DIR.

chanhvinh.com

17.5.5 Output Value

Name: OUT
Offset: 0x04
Reset: 0x00
Property: -

Bit	7	6	5	4	3	2	1	0
	OUT[7:0]							
Access	R/W	R/W	R/W	R/W	R/W	R/W	R/W	R/W
Reset	0	0	0	0	0	0	0	0

Bits 7:0 – OUT[7:0] Output Value
This bit field controls the output driver level for each PORTx pin.
This configuration only affects when the output driver (PORTx.DIR) is enabled for the corresponding pin.
The table below shows the available configuration for each bit n in this bit field.

Value	Description
0	The pin n (Pxn) output is driven low
1	The Pxn output is driven high

chanhvinh.com

chanhvinh.com

17.5.6 Output Value Set

Name: OUTSET
Offset: 0x05
Reset: 0x00
Property: -

Bit	7	6	5	4	3	2	1	0
	OUTSET[7:0]							
Access	R/W	R/W	R/W	R/W	R/W	R/W	R/W	R/W
Reset	0	0	0	0	0	0	0	0

Bits 7:0 – OUTSET[7:0] Output Value Set
This bit field controls the output driver level for each PORTx pin without using a read-modify-write operation.
Writing a '0' to bit n in this bit field has no effect.
Writing a '1' to bit n in this bit field will set the corresponding bit in PORTx.OUT, which will configure the output for pin n (Pxn) to be driven high.
Reading this bit field will return the value of PORTx.OUT.

chanhvinh.com

17.5.7 Output Value Clear

Name: OUTCLR
Offset: 0x06
Reset: 0x00
Property: -

Bit	7	6	5	4	3	2	1	0
	OUTCLR[7:0]							
Access	R/W	R/W	R/W	R/W	R/W	R/W	R/W	R/W
Reset	0	0	0	0	0	0	0	0

Bits 7:0 – OUTCLR[7:0] Output Value Clear
This bit field controls the output driver level for each PORTx pin without using a read-modify-write operation.
Writing a '0' to bit n in this bit field has no effect.
Writing a '1' to bit n in this bit field will clear the corresponding bit in PORTx.OUT, which will configure the output for pin n (Pxn) to be driven low.
Reading this bit field will return the value of PORTx.OUT.

chanhvinh.com

17.5.8 Output Value Toggle

Name: OUTTGL
Offset: 0x07
Reset: 0x00
Property: -

Bit	7	6	5	4	3	2	1	0
	OUTTGL[7:0]							
Access	R/W	R/W	R/W	R/W	R/W	R/W	R/W	R/W
Reset	0	0	0	0	0	0	0	0

Bits 7:0 – OUTTGL[7:0] Output Value Toggle
This bit field controls the output driver level for each PORTx pin without using a read-modify-write operation.
Writing a '0' to bit n in this bit field has no effect.
Writing a '1' to bit n in this bit field will toggle the corresponding bit in PORTx.OUT.
Reading this bit field will return the value of PORTx.OUT.

chanhvinh.com

17.5.9 Input Value

Name: IN
Offset: 0x08
Reset: 0x00
Property: -

Bit	7	6	5	4	3	2	1	0
	IN[7:0]							
Access	R/W	R/W	R/W	R/W	R/W	R/W	R/W	R/W
Reset	0	0	0	0	0	0	0	0

Bits 7:0 – IN[7:0] Input Value
This bit field shows the state of the PORTx pins when the digital input buffer is enabled.
Writing a '0' to bit n in this bit field has no effect.
Writing a '1' to bit n in this bit field will toggle the corresponding bit in PORTx.OUT.
If the digital input buffer is disabled, the input is not sampled, and the bit value will not change. The digital input buffer for pin n (Pxn) can be configured in the Input/Sense Configuration (ISC) bit field in the Pin n Control (PORTx.PINnCTRL) register.
The table below shows the available states of each bit n in this bit field.

Value	Description
0	The voltage level on Pxn is low
1	The voltage level on Pxn is high

© 2021 Microchip Technology Inc.
and its subsidiaries

chanhvinh.com

17.5.10 Interrupt Flags

Name: INTFLAGS
Offset: 0x09
Reset: 0x00
Property: -

Bit	7	6	5	4	3	2	1	0
	INT[7:0]							
Access	R/W	R/W	R/W	R/W	R/W	R/W	R/W	R/W
Reset	0	0	0	0	0	0	0	0

Bits 7:0 – INT[7:0] Pin Interrupt Flag
Pin Interrupt Flag n is cleared by writing a '1' to it.
Pin Interrupt Flag n is set when the change or state of pin n (Pxn) matches the pin's Input/Sense Configuration (ISC) in PORTx.PINnCTRL.
Writing a '0' to bit n in this bit field has no effect.
Writing a '1' to bit n in this bit field will clear Pin Interrupt Flag n.

chanhvinh.com

17.5.11 Port Control

Name: PORTCTRL
Offset: 0x0A
Reset: 0x00
Property: -

This register contains the slew rate limit enable bit for this port.

Bit	7	6	5	4	3	2	1	0
								SRL
Access								R/W
Reset								0

Bit 0 – SRL Slew Rate Limit Enable
This bit controls the slew rate limitation for all pins in PORTx.

Value	Description
0	Slew rate limitation is disabled for all pins in PORTx
1	Slew rate limitation is enabled for all pins in PORTx

chanhvinh.com

chanhvinh.com

17.5.12 Multi-Pin Configuration

Name: PINCONFIG
Offset: 0x0B
Reset: 0x00
Property: -

For faster configuration of the port module, the multi-pin configuration write enables the configuration of several pins of a port in a single cycle. Especially with large pin count devices, this function can significantly speed up PORT pin configuration operations.

Writing to this register may be followed by a write to either of the Multi-Pin Control (PORTx.PINCTRLUPD/SET/CLR) registers to update the Pin n Control (PORTx.PINnCTRL) registers for PORTx.

This register is mirrored across all PORTx modules.

Bit	7	6	5	4	3	2	1	0
	INVEN				PULLUPEN	ISC[2:0]		
Access	R/W				R/W	R/W	R/W	R/W
Reset	0				0	0	0	0

Bit 7 – INVEN Inverted I/O Enable
This bit controls whether the input and output for pin n are inverted or not.

Value	Description
0	Input and output values are not inverted
1	Input and output values are inverted

Bit 3 – PULLUPEN Pull-Up Enable
This bit controls whether the internal pull-up of pin n is enabled or not when the pin is configured as input-only.

Value	Description
0	Pull-up disabled
1	Pull-up enabled

Bits 2:0 – ISC[2:0] Input/Sense Configuration
This bit field controls the input and sense configuration of pin n. The sense configuration determines how to trigger a port interrupt.

Value	Name	Description
0x0	INTDISABLE	Interrupt disabled but digital input buffer enabled
0x1	BOTHEDGES	Interrupt enabled with sense on both edges
0x2	RISING	Interrupt enabled with sense on rising edge
0x3	FALLING	Interrupt enabled with sense on falling edge
0x4	INPUT_DISABLE	Interrupt and digital input buffer disabled(1)
0x5	LEVEL	Interrupt enabled with sense on low level(2)
other	—	Reserved

Notes:

1. If the digital input buffer for pin n is disabled, bit n in the Input Value (PORTx.IN) register will not be updated.
2. The LEVEL interrupt will keep triggering continuously as long as the pin stays low.

© 2021 Microchip Technology Inc.
and its subsidiaries

chanhvinh.com

17.5.13 Multi-Pin Control Update Mask

Name: PINCTRLUPD
Offset: 0x0C
Reset: 0x00
Property: -

For faster configuration of the port module, the multi-pin configuration write enables the configuration of several pins of a port in a single cycle. Especially with large pin count devices, this function can significantly speed up PORT pin configuration operations.

Bit	7	6	5	4	3	2	1	0
	PINCTRLUPD[7:0]							
Access	R/W	R/W	R/W	R/W	R/W	R/W	R/W	R/W
Reset	0	0	0	0	0	0	0	0

Bits 7:0 – PINCTRLUPD[7:0] Multi-Pin Control Update Mask
This bit field controls the copy of the Multi-Pin Configuration (PORTx.PINCONFIG) register content to the individual Pin n Control (PORTx.PINnCTRL) registers without using an individual write operation for each register.
Writing a '0' to bit n in this bit field has no effect.
Writing a '1' to bit n in this bit field will copy the PORTx.PINCONFIG register content to the corresponding PORTx.PINnCTRL register.
Reading this bit field will always return zero.

chanhvinh.com

17.5.14 Multi-Pin Control Set Mask

Name: PINCTRLSET
Offset: 0x0D
Reset: 0x00
Property: -

For faster configuration of the port module, the multi-pin configuration write enables the configuration of several pins of a port in a single cycle. Especially with large pin count devices, this function can significantly speed up PORT pin configuration operations.

Bit	7	6	5	4	3	2	1	0
	PINCTRLSET[7:0]							
Access	R/W	R/W	R/W	R/W	R/W	R/W	R/W	R/W
Reset	0	0	0	0	0	0	0	0

Bits 7:0 – PINCTRLSET[7:0] Multi-Pin Control Set Mask
This bit field controls the setting of bits in the individual Pin n Control (PORTx.PINnCTRL) registers without using an individual read-modify-write operation for each register.
Writing a '0' to bit n in this bit field has no effect.
Writing a '1' to bit n in this bit field will set the individual bits in the PORTx.PINnCTRL register, according to the bits set to '1' in the Multi-Pin Configuration (PORTx.PINCONFIG) register.
Reading this bit field will always return zero.

chanhvinh.com

17.5.15 Multi-Pin Control Clear Mask

Name: PINCTRLCLR
Offset: 0x0E
Reset: 0x00
Property: -

For faster configuration of the port module, the multi-pin configuration write enables the configuration of several pins of a port in a single cycle. Especially with large pin count devices, this function can significantly speed up PORT pin configuration operations.

Bit	7	6	5	4	3	2	1	0
	PINCTRLCLR[7:0]							
Access	R/W	R/W	R/W	R/W	R/W	R/W	R/W	R/W
Reset	0	0	0	0	0	0	0	0

Bits 7:0 – PINCTRLCLR[7:0] Multi-Pin Control Clear Mask
This bit field controls the clearing of bits in the individual Pin n Control (PORTx.PINnCTRL) registers without using an individual read-modify-write operation for each register.
Writing a '0' to bit n in this bit field has no effect.
Writing a '1' to bit n in this bit field will clear the individual bits in the PORTx.PINnCTRL register, according to the bits set to '1' in the Multi-Pin Configuration (PORTx.PINCONFIG) register.
Reading this bit field will always return zero.

chanhvinh.com

chanhvinh.com

17.5.16 Pin n Control

Name: PINnCTRL
Offset: 0x10 + n*0x01 [n=0..7]
Reset: 0x00
Property: -

Bit	7	6	5	4	3	2	1	0
	INVEN				PULLUPEN	ISC[2:0]		
Access	R/W				R/W	R/W	R/W	R/W
Reset	0				0	0	0	0

Bit 7 – INVEN Inverted I/O Enable
This bit controls whether the input and output for pin n are inverted or not.

Value	Description
0	Input and output values are not inverted
1	Input and output values are inverted

Bit 3 – PULLUPEN Pull-up Enable
This bit controls whether the internal pull-up of pin n is enabled or not when the pin is configured as input-only.

Value	Description
0	Pull-up disabled
1	Pull-up enabled

Bits 2:0 – ISC[2:0] Input/Sense Configuration
This bit field controls the input and sense configuration of pin n. The sense configuration determines how a port interrupt can be triggered.

Value	Name	Description
0x0	INTDISABLE	Interrupt disabled but digital input buffer enabled
0x1	BOTHEDGES	Interrupt enabled with sense on both edges
0x2	RISING	Interrupt enabled with sense on rising edge
0x3	FALLING	Interrupt enabled with sense on falling edge
0x4	INPUT_DISABLE	Interrupt and digital input buffer disabled(1)
0x5	LEVEL	Interrupt enabled with sense on low level(2)
other	—	Reserved

Notes:
1. If the digital input buffer for pin n is disabled, bit n in the Input Value (PORTx.IN) register will not be updated.
2. The LEVEL interrupt will keep triggering continuously as long as the pin stays low.

© 2021 Microchip Technology Inc.
and its subsidiaries

chanhvinh.com

17.6 Register Summary - VPORTx

Offset	Name	Bit Pos.	7	6	5	4	3	2	1	0
0x00	DIR	7:0	DIR[7:0]							
0x01	OUT	7:0	OUT[7:0]							
0x02	IN	7:0	IN[7:0]							
0x03	INTFLAGS	7:0	INT[7:0]							

17.7 Register Description - VPORTx

chanhvinh.com

chanhvinh.com

17.7.1 Data Direction

Name: DIR
Offset: 0x00
Reset: 0x00
Property: -

Access to the Virtual PORT registers has the same outcome as access to the regular registers but allows for memory-specific instructions, such as bit manipulation instructions, which cannot be used in the extended I/O Register space where the regular PORT registers reside.

Bit	7	6	5	4	3	2	1	0
	DIR[7:0]							
Access	R/W	R/W	R/W	R/W	R/W	R/W	R/W	R/W
Reset	0	0	0	0	0	0	0	0

Bits 7:0 – DIR[7:0] Data Direction
This bit field controls the output driver for each PORTx pin.
This bit field does not control the digital input buffer. The digital input buffer for pin n (Pxn) can be configured in the Input/Sense Configuration (ISC) bit field in the Pin n Control (PORTx.PINnCTRL) register.
The table below shows the available configuration for each bit n in this bit field.

Value	Description
0	Pxn is configured as an input-only pin, and the output driver is disabled
1	Pxn is configured as an output pin, and the output driver is enabled

chanhvinh.com

chanhvinh.com

17.7.2 Output Value

Name: OUT
Offset: 0x01
Reset: 0x00
Property: -

Access to the Virtual PORT registers has the same outcome as access to the regular registers but allows for memory-specific instructions, such as bit manipulation instructions, which cannot be used in the extended I/O Register space where the regular PORT registers reside.

Bit	7	6	5	4	3	2	1	0
	OUT[7:0]							
Access	R/W	R/W	R/W	R/W	R/W	R/W	R/W	R/W
Reset	0	0	0	0	0	0	0	0

Bits 7:0 – OUT[7:0] Output Value
This bit field controls the output driver level for each PORTx pin.
This configuration only affects when the output driver (PORTx.DIR) is enabled for the corresponding pin.
The table below shows the available configuration for each bit n in this bit field.

Value	Description
0	The pin n (Pxn) output is driven low
1	The Pxn output is driven high

chanhvinh.com

chanhvinh.com

17.7.3 Input Value

Name: IN
Offset: 0x02
Reset: 0x00
Property: -

Access to the Virtual PORT registers has the same outcome as access to the regular registers but allows for memory-specific instructions, such as bit manipulation instructions, which cannot be used in the extended I/O Register space where the regular PORT registers reside.

Bit	7	6	5	4	3	2	1	0
	IN[7:0]							
Access	R/W	R/W	R/W	R/W	R/W	R/W	R/W	R/W
Reset	0	0	0	0	0	0	0	0

Bits 7:0 – IN[7:0] Input Value
This bit field shows the state of the PORTx pins when the digital input buffer is enabled.
Writing a '0' to bit n in this bit field has no effect.
Writing a '1' to bit n in this bit field will toggle the corresponding bit in PORTx.OUT.
If the digital input buffer is disabled, the input is not sampled, and the bit value will not change. The digital input buffer for pin n (Pxn) can be configured in the Input/Sense Configuration (ISC) bit field in the Pin n Control (PORTx.PINnCTRL) register.
The table below shows the available states of each bit n in this bit field.

Value	Description
0	The voltage level on Pxn is low
1	The voltage level on Pxn is high

© 2021 Microchip Technology Inc.
and its subsidiaries

chanhvinh.com

17.7.4 Interrupt Flags

Name: INTFLAGS
Offset: 0x03
Reset: 0x00
Property: -

Access to the Virtual PORT registers has the same outcome as access to the regular registers but allows for memory-specific instructions, such as bit manipulation instructions, which cannot be used in the extended I/O Register space where the regular PORT registers reside.

Bit	7	6	5	4	3	2	1	0
	INT[7:0]							
Access	R/W	R/W	R/W	R/W	R/W	R/W	R/W	R/W
Reset	0	0	0	0	0	0	0	0

Bits 7:0 – INT[7:0] Pin Interrupt Flag
Pin Interrupt Flag n is cleared by writing a '1' to it.
Pin Interrupt Flag n is set when the change or state of pin n (Pxn) matches the pin's Input/Sense Configuration (ISC) in PORTx.PINnCTRL.
Writing a '0' to bit n in this bit field has no effect.
Writing a '1' to bit n in this bit field will clear Pin Interrupt Flag n.

chanhvinh.com

18. BOD - Brown-out Detector

18.1 Features

- Brown-out Detector Monitors the Power Supply to Avoid Operation Below a Programmable Level
- Three Available Modes:
  - Enabled mode (continuously active)
  - Sampled mode
  - Disabled
- Separate Selection of Mode for Active and Sleep Modes
- Voltage Level Monitor (VLM) with Interrupt
- Programmable VLM Level Relative to the BOD Level

18.2 Overview

The Brown-out Detector (BOD) monitors the power supply and compares the supply voltage with the programmable brown-out threshold level. The brown-out threshold level defines when to generate a System Reset. The Voltage Level Monitor (VLM) monitors the power supply and compares it to a threshold higher than the BOD threshold. The VLM can then generate an interrupt as an “early warning” when the supply voltage is approaching the BOD threshold. The VLM threshold level is expressed as a percentage above the BOD threshold level.

The BOD is controlled mainly by fuses and has to be enabled by the user. The mode used in Standby sleep mode and Power-Down sleep mode can be altered in normal program execution. The VLM is controlled by I/O registers as well.

When activated, the BOD can operate in Enabled mode, where the BOD is continuously active, or in Sampled mode, where the BOD is activated briefly at a given period to check the supply voltage level.

chanhvinh.com

chanhvinh.com

18.2.1 Block Diagram

Figure 18-1. BOD Block Diagram

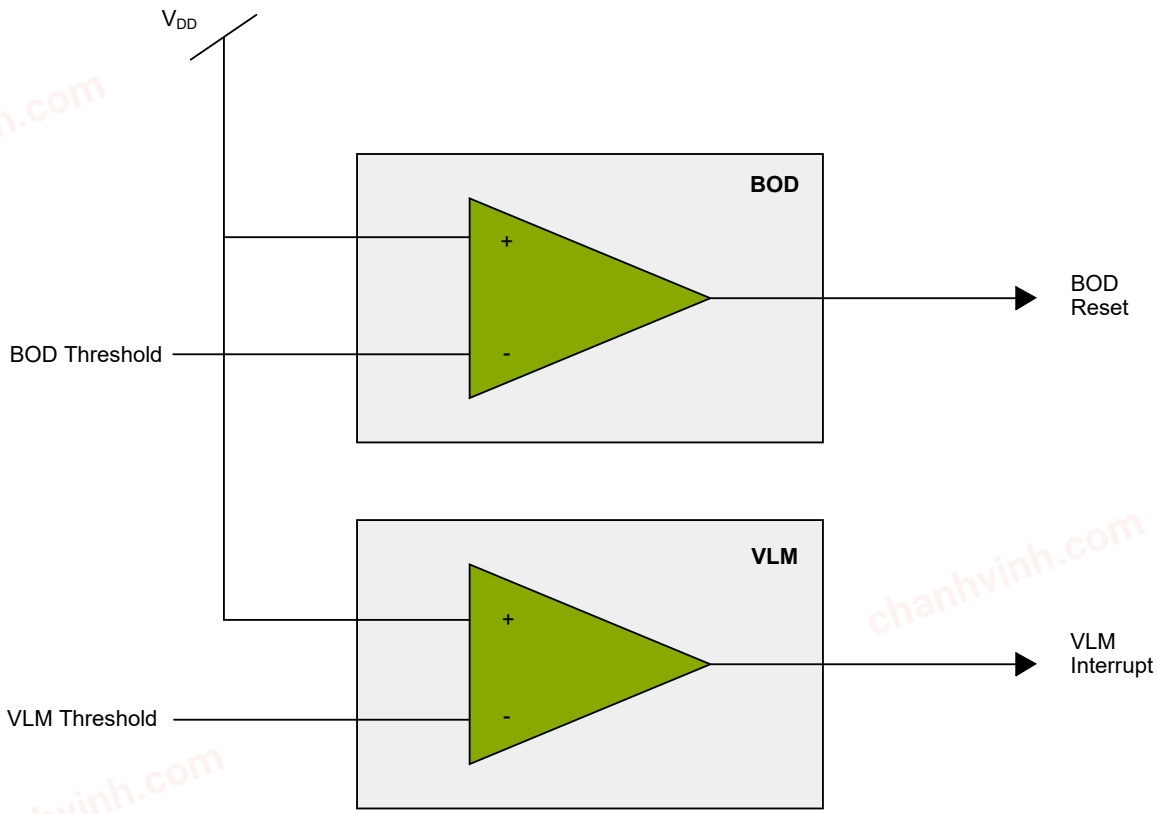

18.3 Functional Description

18.3.1 Initialization

The BOD settings are loaded from fuses during Reset. The BOD level and operating mode in Active mode and Idle sleep mode are set by fuses and cannot be changed by software. The operating mode in Standby and Power-Down sleep mode is loaded from fuses and can be changed by software.

The Voltage Level Monitor function can be enabled by writing a '1' to the VLM Interrupt Enable (VLMIE) bit in the Interrupt Control (BOD.INTCTRL) register. The VLM interrupt is configured by writing the VLM Configuration (VLMCFG) bits in BOD.INTCTRL. An interrupt is requested when the supply voltage crosses the VLM threshold from either above or below.

The VLM functionality will follow the BOD mode. If the BOD is disabled, the VLM will not be enabled, even if the VLMIE is '1'. If the BOD is using the Sampled mode, the VLM will also be sampled. When enabling the VLM interrupt, the interrupt flag will always be set if VLMCFG equals 0x2, and may be set if VLMCFG is configured to 0x0 or 0x1.

The VLM threshold is defined by writing the VLM Level (VLMLVL) bits in the VLM Control (BOD.VLMCTRLA) register.

18.3.2 Interrupts

Table 18-1. Available Interrupt Vectors and Sources

Name	Vector Description	Conditions
VLM	Voltage Level Monitor	Supply voltage crossing the VLM threshold as configured by the VLM Configuration (VLMCFG) bit field in the Interrupt Control (BOD.INTCTRL) register

chanhvinh.com

The VLM interrupt will not be executed if the CPU is halted in Debug mode.

When an interrupt condition occurs, the corresponding interrupt flag is set in the peripheral's Interrupt Flags (*peripheral*.INTFLAGS) register.

An interrupt source is enabled or disabled by writing to the corresponding enable bit in the peripheral's Interrupt Control (*peripheral*.INTCTRL) register.

An interrupt request is generated when the corresponding interrupt source is enabled, and the interrupt flag is set. The interrupt request remains active until the interrupt flag is cleared. See the peripheral's INTFLAGS register for details on how to clear interrupt flags.

18.3.3 Sleep Mode Operation

The BOD configuration in the different sleep modes is defined by fuses. The mode used in Active mode and Idle sleep mode is defined by the ACTIVE fuses in FUSE.BODCFG, which is loaded into the ACTIVE bit field in the Control A (BOD.CTRLA) register. The mode used in Standby sleep mode and Power-Down sleep mode is defined by SLEEP in FUSE.BODCFG, which is loaded into the SLEEP bit field in the Control A (BOD.CTRLA) register.

The operating mode in Active mode and Idle sleep mode (i.e., ACTIVE in BOD.CTRLA) cannot be altered by software. The operating mode in Standby sleep mode and Power-Down sleep mode can be altered by writing to the SLEEP bit field in the Control A (BOD.CTRLA) register.

When the device is going into Standby or Power-Down sleep mode, the BOD will change the operation mode as defined by SLEEP in BOD.CTRLA. When the device is waking up from Standby or Power-Down sleep mode, the BOD will operate in the mode defined by the ACTIVE bit field in the Control A (BOD.CTRLA) register.

18.3.4 Configuration Change Protection

This peripheral has registers that are under Configuration Change Protection (CCP). To write to these registers, a certain key must first be written to the CPU.CCP register, followed by a write access to the protected bits within four CPU instructions.

Attempting to write to a protected register without following the appropriate CCP unlock sequence leaves the protected register unchanged.

The following registers are under CCP:

Table 18-2. Registers Under Configuration Change Protection

Register	Key
The SLEEP and SAMPFREQ bits in the BOD.CTRLA register	IOREG

chanhvinh.com

18.4 Register Summary

Offset	Name	Bit Pos.	7	6	5	4	3	2	1	0
0x00	CTRLA	7:0				SAMPFREQ	ACTIVE[1:0]		SLEEP[1:0]	
0x01	CTRLB	7:0						LVL[2:0]		
0x02 ... 0x07	Reserved									
0x08	VLMCTRLA	7:0							VLMLVL[1:0]	
0x09	INTCTRL	7:0						VLMCFG[1:0]		VLMIE
0x0A	INTFLAGS	7:0								VLMIF
0x0B	STATUS	7:0								VLMS

18.5 Register Description

chanhvinh.com

18.5.1 Control A

Name: CTRLA
Offset: 0x00
Reset: 0x00
Property: Configuration Change Protection

Bit	7	6	5	4	3	2	1	0
				SAMPFREQ	ACTIVE[1:0]		SLEEP[1:0]	
Access				R	R	R	R/W	R/W
Reset				0	0	0	0	0

Bit 4 – SAMPFREQ Sample Frequency
This bit controls the BOD sample frequency.
The Reset value is loaded from the SAMPFREQ bit in FUSE.BODCFG.
This bit is not under Configuration Change Protection (CCP).

Value	Description
0x0	Sample frequency is 128 Hz
0x1	Sample frequency is 32 Hz

Bits 3:2 – ACTIVE[1:0] Active
These bits select the BOD operation mode when the device is in Active mode or Idle sleep mode.
The Reset value is loaded from the ACTIVE bits in FUSE.BODCFG.
These bits are not under Configuration Change Protection (CCP).

Value	Name	Description
0x0	DIS	Disabled
0x1	ENABLED	Enabled in Continuous mode
0x2	SAMPLE	Enabled in Sampled mode
0x3	ENWAKE	Enabled in Continuous mode. Execution is halted at wake-up until BOD is running.

Bits 1:0 – SLEEP[1:0] Sleep
These bits select the BOD operation mode when the device is in Standby or Power-Down sleep mode. The Reset value is loaded from the SLEEP bits in FUSE.BODCFG.

Value	Name	Description
0x0	DIS	Disabled
0x1	ENABLED	Enabled in Continuous mode
0x2	SAMPLED	Enabled in Sampled mode
0x3	-	Reserved

© 2021 Microchip Technology Inc.
and its subsidiaries

chanhvinh.com

18.5.2 Control B

Name: CTRLB
Offset: 0x01
Reset: Loaded from fuse
Property: -

Bit	7	6	5	4	3	2	1	0
						LVL[2:0]		
Access	R	R	R	R	R	R	R	R
Reset	0	0	0	0	0	x	x	x

Bits 2:0 – LVL[2:0] BOD Level
This bit field controls the BOD threshold level.
The Reset value is loaded from the BOD Level (LVL) bits in the BOD Configuration Fuse (FUSE.BODCFG).

Value	Name	Typical Values
0x0	BODLEVEL0	1.9V
0x1	BODLEVEL1	2.45V
0x2	BODLEVEL2	2.7V
0x3	BODLEVEL3	2.85V
Other	—	Reserved

Note: Refer to the *Reset, WDT, Oscillator, Start-up Timer, Power-up Timer, Brown-out Detector Specifications* section for BOD level characterization.

© 2021 Microchip Technology Inc. and its subsidiaries

chanhvinh.com

18.5.3 VLM Control

Name: VLMCTRLA
Offset: 0x08
Reset: 0x00
Property: -

Bit	7	6	5	4	3	2	1	0
							VLMLVL[1:0]	
Access							R/W	R/W
Reset							0	0

Bits 1:0 – VLMLVL[1:0] VLM Level
These bits select the VLM threshold relative to the BOD threshold (LVL in BOD.CTRLB).

Value	Name	Description
0x00	OFF	VLM disabled
0x01	5ABOVE	VLM threshold 5% above the BOD threshold
0x02	15ABOVE	VLM threshold 15% above the BOD threshold
0x03	25ABOVE	VLM threshold 25% above the BOD threshold

© 2021 Microchip Technology Inc.
and its subsidiaries

chanhvinh.com

18.5.4 Interrupt Control

Name: INTCTRL
Offset: 0x09
Reset: 0x00
Property: -

Bit	7	6	5	4	3	2	1	0
						VLMCFG[1:0]		VLMIE
Access						R/W	R/W	R/W
Reset						0	0	0

Bits 2:1 – VLMCFG[1:0] VLM Configuration
These bits select which incidents will trigger a VLM interrupt.

Value	Name	Description
0x0	FALLING	V_{DD} falls below VLM threshold
0x1	RISING	V_{DD} rises above VLM threshold
0x2	BOTH	V_{DD} crosses VLM threshold
Other	-	Reserved

Bit 0 – VLMIE VLM Interrupt Enable
Writing a '1' to this bit enables the VLM interrupt.

chanhvinh.com

18.5.5 VLM Interrupt Flags

Name: INTFLAGS
Offset: 0x0A
Reset: 0x00
Property: -

Bit	7	6	5	4	3	2	1	0
								VLMIF
Access								R/W
Reset								0

Bit 0 – VLMIF VLM Interrupt Flag
This flag is set when a trigger from the VLM is given, as configured by the VLMCFG bit in the BOD.INTCTRL register. The flag is only updated when the BOD is enabled.

chanhvinh.com

18.5.6 VLM Status

Name: STATUS
Offset: 0x0B
Reset: 0x00
Property: -

Bit	7	6	5	4	3	2	1	0
								VLMS
Access								R/W
Reset								0

Bit 0 – VLMS VLM Status
This bit is only valid when the BOD is enabled.

Value	Name	Description
0	ABOVE	The voltage is above the VLM threshold level
1	BELOW	The voltage is below the VLM threshold level

chanhvinh.com

19. VREF - Voltage Reference

19.1 Features

- Programmable Voltage Reference Sources:
  - One reference for Analog-to-Digital Converter 0 (ADC0)
  - One reference for Digital-to-Analog Converter 0 (DAC0)
  - One reference shared between all Analog Comparators (ACs)
- Each Reference Source Supports the Following Voltages:
  - 1.024V
  - 2.048V
  - 4.096V
  - 2.500V
  - VDD
  - VREFA

19.2 Overview

The Voltage Reference (VREF) peripheral provides control registers for the voltage reference sources used by several peripherals. The user can select the reference voltages for the ADC0, DAC0 and ACs by writing to the appropriate registers in the VREF peripheral.

A voltage reference source is enabled automatically when requested by a peripheral. The user can enable the reference voltage sources, and thus, override the automatic disabling of unused sources by writing to the respective ALWAYSON bit in VREF.ADC0REF, VREF.DAC0REF and VREF.ACREF. This will decrease the start-up time at the cost of increased power consumption.

19.2.1 Block Diagram

Figure 19-1. VREF Block Diagram

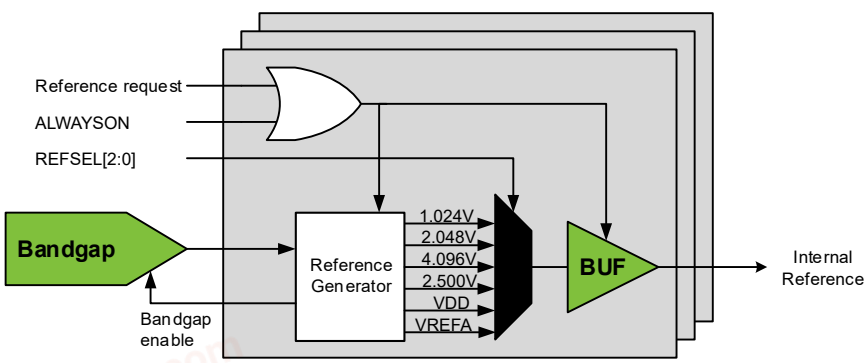

19.3 Functional Description

19.3.1 Initialization

The default configuration will enable the respective source when the ADC0, DAC0, or any of the ACs are requesting a reference voltage. The default reference voltage is 1.024V but can be configured by writing to the respective Reference Select (REFSEL) bit field in the ADC0 Reference (ADC0REF), DAC0 Reference (DAC0REF) or Analog Comparators (ACREF) registers.

chanhvinh.com

19.4 Register Summary

Offset	Name	Bit Pos.	7	6	5	4	3	2	1	0
0x00	ADC0REF	7:0	ALWAYSON					REFSEL[2:0]		
0x01	Reserved									
0x02	DAC0REF	7:0	ALWAYSON					REFSEL[2:0]		
0x03	Reserved									
0x04	ACREF	7:0	ALWAYSON					REFSEL[2:0]		

19.5 Register Description

chanhvinh.com

chanhvinh.com

19.5.1 ADC0 Reference

Name: ADC0REF
Offset: 0x00
Reset: 0x00
Property: -

Bit	7	6	5	4	3	2	1	0
	ALWAYSON					REFSEL[2:0]		
Access	R/W					R/W	R/W	R/W
Reset	0					0	0	0

Bit 7 – ALWAYSON Reference Always On
This bit controls whether the ADC0 reference is always on or not.

Value	Description
0	The reference is automatically enabled when needed
1	The reference is always on

Bits 2:0 – REFSEL[2:0] Reference Select
This bit field controls the reference voltage level for ADC0.

Value	Name	Description
0x0	1V024	Internal 1.024V reference(1)
0x1	2V048	Internal 2.048V reference(1)
0x2	4V096	Internal 4.096V reference(1)
0x3	2V500	Internal 2.500V reference(1)
0x4	-	Reserved
0x5	VDD	VDD as reference
0x6	VREFA	External reference from the VREFA pin
0x7	-	Reserved

Note:
1. The values given for internal references are only typical. Refer to the *Electrical Characteristics* section for further details.

chanhvinh.com

19.5.2 DAC0 Reference

Name: DAC0REF
Offset: 0x02
Reset: 0x00
Property: -

Bit	7	6	5	4	3	2	1	0
	ALWAYSON					REFSEL[2:0]		
Access	R/W					R/W	R/W	R/W
Reset	0					0	0	0

Bit 7 – ALWAYSON Reference Always On
This bit controls whether the DAC0 reference is always on or not.

Value	Description
0	The reference is automatically enabled when needed
1	The reference is always on

Bits 2:0 – REFSEL[2:0] Reference Select
This bit field controls the reference voltage level for DAC0.

Value	Name	Description
0x0	1V024	Internal 1.024V reference(1)
0x1	2V048	Internal 2.048V reference(1)
0x2	4V096	Internal 4.096V reference(1)
0x3	2V500	Internal 2.500V reference(1)
0x4	-	Reserved
0x5	VDD	VDD as reference
0x6	VREFA	External reference from the VREFA pin
0x7	-	Reserved

Note:
1. The values given for internal references are only typical. Refer to the *Electrical Characteristics* section for further details.

chanhvinh.com

19.5.3 Analog Comparator Reference

Name: ACREF
Offset: 0x04
Reset: 0x00
Property: -

Bit	7	6	5	4	3	2	1	0
	ALWAYSON					REFSEL[2:0]		
Access	R/W					R/W	R/W	R/W
Reset	0					0	0	0

Bit 7 – ALWAYSON Reference Always On
This bit controls whether the ACs reference is always on or not.

Value	Description
0	The reference is automatically enabled when needed
1	The reference is always on

Bits 2:0 – REFSEL[2:0] Reference Select
This bit field controls the reference voltage level for ACs.

Value	Name	Description
0x0	1V024	Internal 1.024V reference(1)
0x1	2V048	Internal 2.048V reference(1)
0x2	4V096	Internal 4.096V reference(1)
0x3	2V500	Internal 2.500V reference(1)
0x4	-	Reserved
0x5	VDD	VDD as reference
0x6	VREFA	External reference from the VREFA pin
0x7	-	Reserved

Note:
1. The values given for internal references are only typical. Refer to the *Electrical Characteristics* section for further details.

chanhvinh.com

20. WDT - Watchdog Timer

20.1 Features

- Issues a System Reset if the Watchdog Timer is not Cleared Before its Time-out Period
- Operates Asynchronously from the Peripheral Clock Using an Independent Oscillator
- Uses the 1.024 kHz Output of the 32.768 kHz Ultra Low-Power Oscillator (OSC32K)
- 11 Selectable Time-out Periods, from 8 ms to 8s
- Two Operation Modes:
  - Normal mode
  - Window mode
- Configuration Lock to Prevent Unwanted Changes

20.2 Overview

The Watchdog Timer (WDT) is a system function for monitoring the correct program operation. When enabled, the WDT is a constantly running timer with a configurable time-out period. If the WDT is not reset within the time-out period, it will issue a system Reset. This allows the system to recover from situations such as runaway or deadlocked code. The WDT is reset by executing the `WDR` (Watchdog Timer Reset) instruction from software.

In addition to the Normal mode as described above, the WDT has a Window mode. The Window mode defines a time slot or “window” inside the time-out period during which the WDT must be reset. If the WDT is reset outside this window, either too early or too late, a system Reset will be issued. Compared to the Normal mode, the Window mode can catch situations where a code error causes constant `WDR` execution.

When enabled, the WDT will run in Active mode and all sleep modes. Since it is asynchronous (that is running from a CPU independent clock source), it will continue to operate and be able to issue a system Reset, even if the main clock fails.

The WDT has a Configuration Change Protection (CCP) mechanism and a lock functionality, ensuring the WDT settings cannot be changed by accident.

20.2.1 Block Diagram

Figure 20-1. WDT Block Diagram

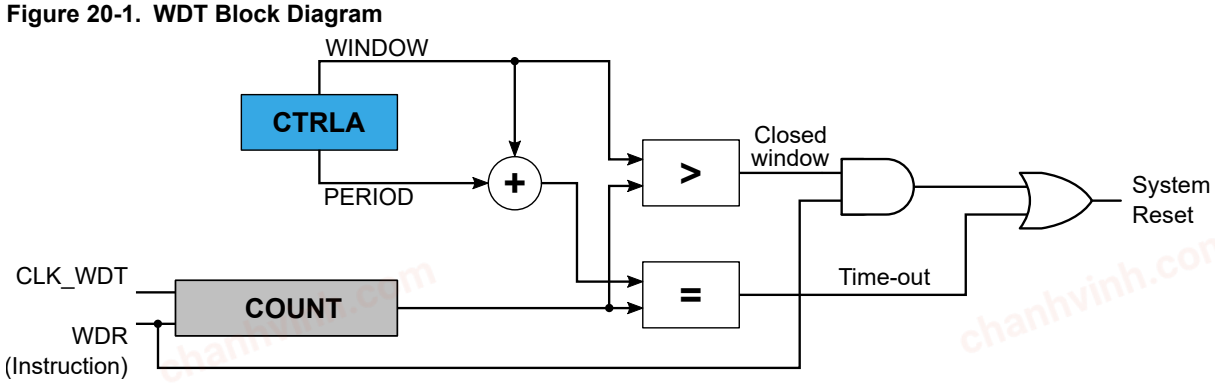

20.3 Functional Description

20.3.1 Initialization

1. The WDT is enabled when a non-zero value is written to the Period (PERIOD) bit field in the Control A (WDT.CTRLA) register.

chanhvinh.com

2. Optional: Write a non-zero value to the Window (WINDOW) bit field in WDT.CTRLA to enable the Window mode operation.

All bits in the Control A register and the Lock (LOCK) bit in the Status (WDT.STATUS) register are write-protected by the Configuration Change Protection (CCP) mechanism.

A fuse (FUSE.WDTCFG) defines the Reset value of the WDT.CTRLA register. If the value of the PERIOD bit field in the FUSE.WDTCFG fuse is different than zero, the WDT is enabled and the LOCK bit in the WDT.STATUS register is set at boot time.

20.3.2 Clocks

A 1.024 kHz clock (CLK_WDT) is sourced from the internal Ultra Low-Power Oscillator, OSC32K. Due to the ultra low-power design, the oscillator is less accurate than other oscillators featured in the device, and hence the exact time-out period may vary from device to device. This variation must be taken into consideration when designing software that uses the WDT, to ensure that the time-out periods used are valid for all devices. Refer to the *Electrical Characteristics* section for more specific information.

The WDT clock (CLK_WDT) is asynchronous to the peripheral clock. Due to this asynchronicity, writing to the WDT Control A (WDT.CTRLA) register will require synchronization between the clock domains. Refer to 20.3.6 Synchronization for further details.

20.3.3 Operation

20.3.3.1 Normal Mode

In the Normal mode operation, a single time-out period is set for the WDT. If the WDT is not reset from software using the `WDR` instruction during the defined time-out period, the WDT will issue a system Reset.

A new WDT time-out period starts each time the WDT is reset by software using the `WDR` instruction.

There are 11 possible WDT time-out periods (TO_{WDT}), selectable from 8 ms to 8s by writing to the Period (PERIOD) bit field in the Control A (WDT.CTRLA) register.

The figure below shows a typical timing scheme for the WDT operating in Normal mode.

Figure 20-2. Normal Mode Operation

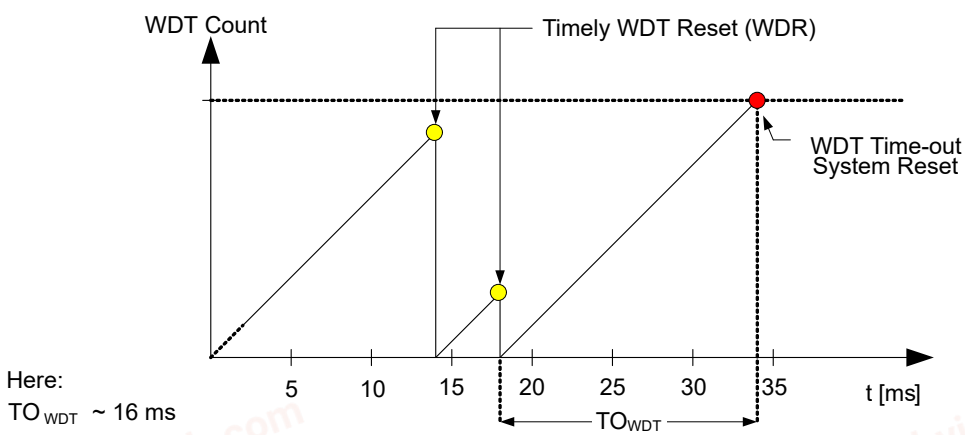

The Normal mode is enabled as long as the Window (WINDOW) bit field in the WDT.CTRLA register is '`0x0`'.

20.3.3.2 Window Mode

In the Window mode operation, the WDT uses two different time-out periods:

- The closed window time-out period (TO_{WDTW}) defines a duration, from 8 ms to 8s, where the WDT cannot be reset. If the WDT is reset during this period, the WDT will issue a system Reset.
- The open window time-out period (TO_{WDT}), which is also 8 ms to 8s, defines the duration of the open period during which the WDT can (and needs to) be reset. The open period will always follow the closed period, so the total duration of the time-out period is the sum of the closed window and the open window time-out periods.

© 2021 Microchip Technology Inc. and its subsidiaries

chanhvinh.com

When enabling the Window mode or when going out of the Debug mode, the window is activated after the first `WDR` instruction.

The figure below shows a typical timing scheme for the WDT operating in Window mode.

Figure 20-3. Window Mode Operation

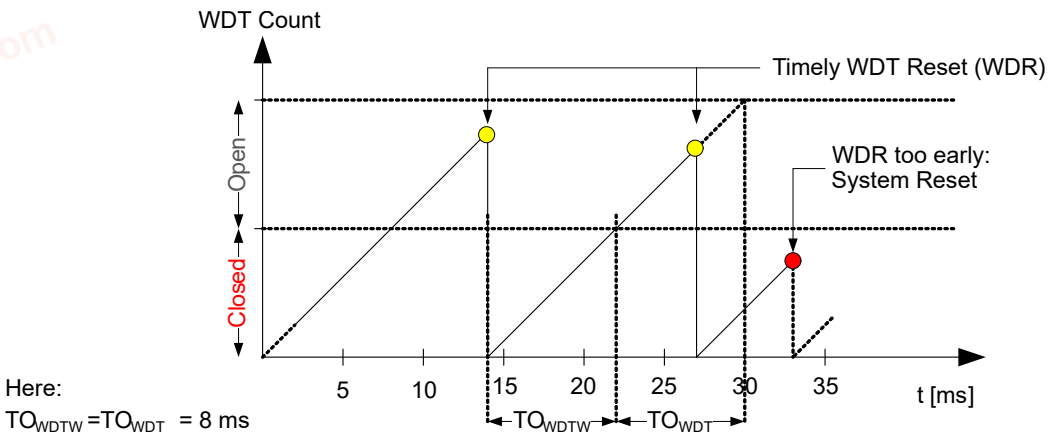

The Window mode is enabled by writing a non-zero value to the Window (WINDOW) bit field in the Control A (WDT.CTRLA) register. The Window mode is disabled by writing the WINDOW bit field to '`0x0`'.

20.3.3.3 Preventing Unintentional Changes

The WDT provides two security mechanisms to avoid unintentional changes to the WDT settings:

- The CCP mechanism, employing a timed write procedure for changing the WDT control registers. Refer to 20.3.7 Configuration Change Protection for further details.
- Locking the configuration by writing a '`1`' to the Lock (LOCK) bit in the Status (WDT.STATUS) register. When this bit is '`1`', the Control A (WDT.CTRLA) register cannot be changed. The LOCK bit can only be written to '`1`' in software, while the device needs to be in Debug mode to be able to write it to '`0`'. Consequently, the WDT cannot be disabled from software.

Note: The WDT configuration is loaded from fuses after Reset. If the PERIOD bit field is set to a non-zero value, the LOCK bit is automatically set in WDT.STATUS.

20.3.4 Sleep Mode Operation

The WDT will continue to operate in any sleep mode where the source clock is active.

20.3.5 Debug Operation

When run-time debugging, this peripheral will continue normal operation. Halting the CPU in Debugging mode will halt the normal operation of the peripheral.

When halting the CPU in Debug mode, the WDT counter is reset.

When starting the CPU and when the WDT is operating in Window mode, the first closed window time-out period will be disabled, and a Normal mode time-out period is executed.

20.3.6 Synchronization

The Control A (WDT.CTRLA) register is synchronized when written, due to the asynchronicity between the WDT clock domain and the peripheral clock domain. The Synchronization Busy (SYNCBUSY) flag in the STATUS (WDT.STATUS) register indicates if there is an ongoing synchronization.

Writing to WDT.CTRLA while SYNCBUSY = `1` is not allowed.

The following bit fields must be synchronized when written:

- The Period (PERIOD) bit field in Control A (WDT.CTRLA) register
- The Window (WINDOW) bit field in Control A (WDT.CTRLA) register

The `WDR` instruction will need two to three cycles of the WDT clock to be synchronized.

© 2021 Microchip Technology Inc.
and its subsidiaries

chanhvinh.com

20.3.7 Configuration Change Protection

This peripheral has registers that are under Configuration Change Protection (CCP). To write to these registers, a certain key must first be written to the CPU.CCP register, followed by a write access to the protected bits within four CPU instructions.

Attempting to write to a protected register without following the appropriate CCP unlock sequence leaves the protected register unchanged.

The following registers are under CCP:

Table 20-1. WDT - Registers Under Configuration Change Protection

Register	Key
WDT.CTRLA	IOREG
LOCK bit in WDT.STATUS	IOREG

chanhvinh.com

chanhvinh.com

20.4 Register Summary

Offset	Name	Bit Pos.	7	6	5	4	3	2	1	0
0x00	CTRLA	7:0	WINDOW[3:0]				PERIOD[3:0]			
0x01	STATUS	7:0	LOCK							SYNCBUSY

20.5 Register Description

chanhvinh.com

chanhvinh.com

20.5.1 Control A

Name: CTRLA
Offset: 0x00
Reset: From FUSE.WDTCFG
Property: Configuration Change Protection

Bit	7	6	5	4	3	2	1	0
	WINDOW[3:0]				PERIOD[3:0]			
Access	R/W	R/W	R/W	R/W	R/W	R/W	R/W	R/W
Reset	x	x	x	x	x	x	x	x

Bits 7:4 – WINDOW[3:0] Window
Writing a non-zero value to these bits enables the Window mode and selects the duration of the closed period accordingly.
The bits are optionally lock-protected:

- If the LOCK bit in WDT.STATUS is '1', all bits are change-protected (Access = R)
- If the LOCK bit in WDT.STATUS is '0', all bits can be changed (Access = R/W)

Value	Name	Description
0x0	OFF	-
0x1	8CLK	7.8125 ms
0x2	16CLK	15.625 ms
0x3	32CLK	31.25 ms
0x4	64CLK	62.5 ms
0x5	128CLK	0.125s
0x6	256CLK	0.250s
0x7	512CLK	0.500s
0x8	1KCLK	1.0s
0x9	2KCLK	2.0s
0xA	4KCLK	4.0s
0xB	8KCLK	8.0s
Other	-	Reserved

Note: Refer to the *Electrical Characteristics* section for specific information regarding the accuracy of the 32.768 kHz Ultra Low-Power Oscillator (OSC32K).

Bits 3:0 – PERIOD[3:0] Period
Writing a non-zero value to this bit enables the WDT and selects the time-out period in the Normal mode accordingly. In the Window mode, these bits select the duration of the open window.
The bits are optionally lock-protected:

- If the LOCK bit in WDT.STATUS is '1', all bits are change-protected (Access = R)
- If the LOCK bit in WDT.STATUS is '0', all bits can be changed (Access = R/W)

Value	Name	Description
0x0	OFF	-
0x1	8CLK	7.8125 ms
0x2	16CLK	15.625 ms
0x3	32CLK	31.25 ms
0x4	64CLK	62.5 ms
0x5	128CLK	0.125s
0x6	256CLK	0.250s
0x7	512CLK	0.500s
0x8	1KCLK	1.0s
0x9	2KCLK	2.0s
0xA	4KCLK	4.0s

© 2021 Microchip Technology Inc. and its subsidiaries

chanhvinh.com

Value	Name	Description
0xB	8KCLK	8.0s
Other	-	Reserved

Note: Refer to the *Electrical Characteristics* section for specific information regarding the accuracy of the 32.768 kHz Ultra Low-Power Oscillator (OSC32K).

chanhvinh.com

chanhvinh.com

20.5.2 Status

Name: STATUS
Offset: 0x01
Reset: 0x00
Property: Configuration Change Protection

Bit	7	6	5	4	3	2	1	0
	LOCK							SYNCBUSY
Access	R/W							R
Reset	0							0

Bit 7 – LOCK Lock
Writing this bit to '1' write-protects the WDT.CTRLA register.
It is only possible to write this bit to '1'. This bit can be cleared in Debug mode only.
If the PERIOD bits in WDT.CTRLA are different from zero after boot code, the lock will automatically be set.
This bit is under CCP.

Bit 0 – SYNCBUSY Synchronization Busy
This bit is set after writing to the WDT.CTRLA register, while the data is being synchronized from the peripheral clock domain to the WDT clock domain.
This bit is cleared after the synchronization is finished.
This bit is not under CCP.

chanhvinh.com

chanhvinh.com

21. TCA - 16-bit Timer/Counter Type A

21.1 Features

- 16-Bit Timer/Counter
- Three Compare Channels
- Double-Buffered Timer Period Setting
- Double-Buffered Compare Channels
- Waveform Generation:
  - Frequency generation
  - Single-slope PWM (Pulse-Width Modulation)
  - Dual-slope PWM
- Count on Event
- Timer Overflow Interrupts/Events
- One Compare Match per Compare Channel
- Two 8-Bit Timer/Counters in Split Mode

21.2 Overview

The flexible 16-bit PWM Timer/Counter type A (TCA) provides accurate program execution timing, frequency and waveform generation, and command execution.

A TCA consists of a base counter and a set of compare channels. The base counter can be used to count clock cycles or events or let events control how it counts clock cycles. It has direction control and period setting that can be used for timing. The compare channels can be used together with the base counter to perform a compare match control, frequency generation, and pulse-width waveform modulation.

Depending on the mode of operation, the counter is cleared, reloaded, incremented, or decremented at each timer/counter clock or event input.

A timer/counter can be clocked and timed from the peripheral clock, with optional prescaling, or from the Event System. The Event System can also be used for direction control or to synchronize operations.

By default, the TCA is a 16-bit timer/counter. The timer/counter has a Split mode feature that splits it into two 8-bit timer/counters with three compare channels each.

A block diagram of the 16-bit timer/counter with closely related peripheral modules (in grey) is shown in the figure below.

© 2021 Microchip Technology Inc.
and its subsidiaries

chanhvinh.com

Figure 21-1. 16-bit Timer/Counter and Closely Related Peripherals

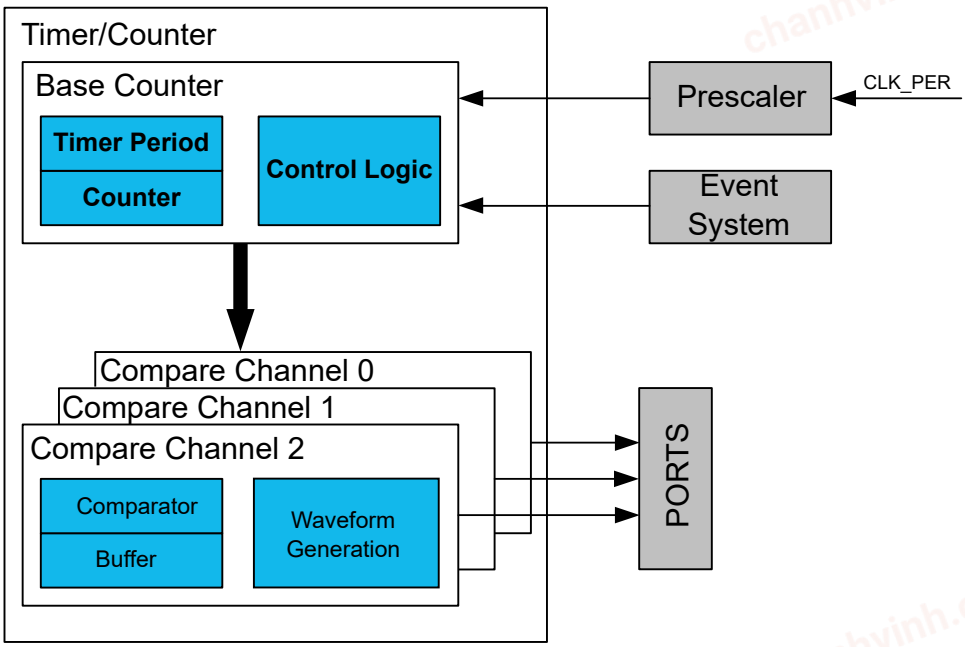

21.2.1 Block Diagram

The figure below shows a detailed block diagram of the timer/counter.

Figure 21-2. Timer/Counter Block Diagram

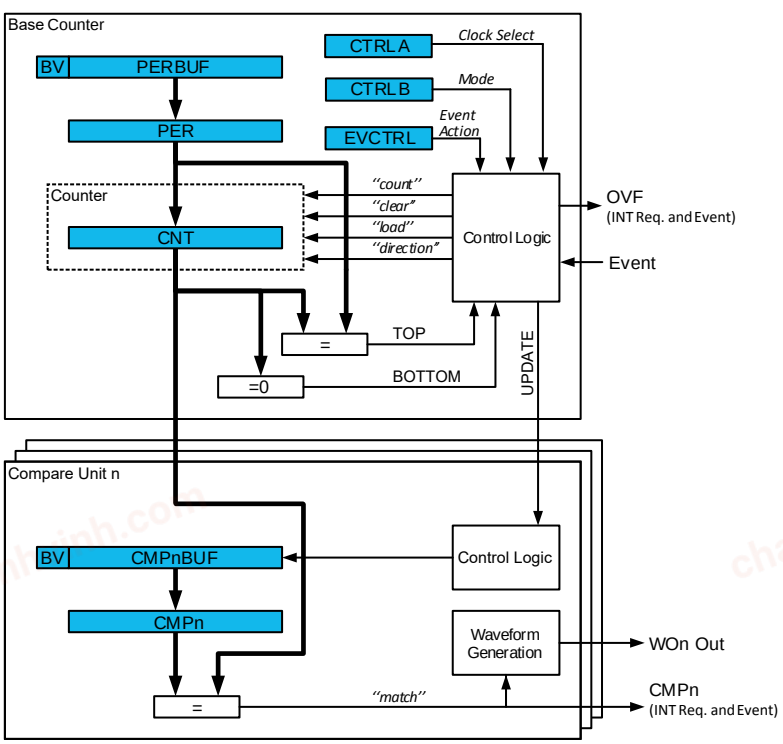

chanhvinh.com

The Counter (TCAn.CNT) register, Period and Compare (TCAn.PER and TCAn.CMPn) registers, and their corresponding buffer registers (TCAn.PERBUF and TCAn.CMPnBUF) are 16-bit registers. All buffer registers have a Buffer Valid (BV) flag that indicates when the buffer contains a new value.

During normal operation, the counter value is continuously compared to zero and the period (PER) value to determine whether the counter has reached TOP or BOTTOM. The counter value can also be compared to the TCAn.CMPn registers.

The timer/counter can generate interrupt requests, events, or change the waveform output after being triggered by the Counter (TCAn.CNT) register reaching TOP, BOTTOM, or CMPn. The interrupt requests, events, or waveform output changes will occur on the next CLK_TCA cycle after the triggering.

CLK_TCA is either the prescaled peripheral clock or events from the Event System, as shown in the figure below.

Figure 21-3. Timer/Counter Clock Logic

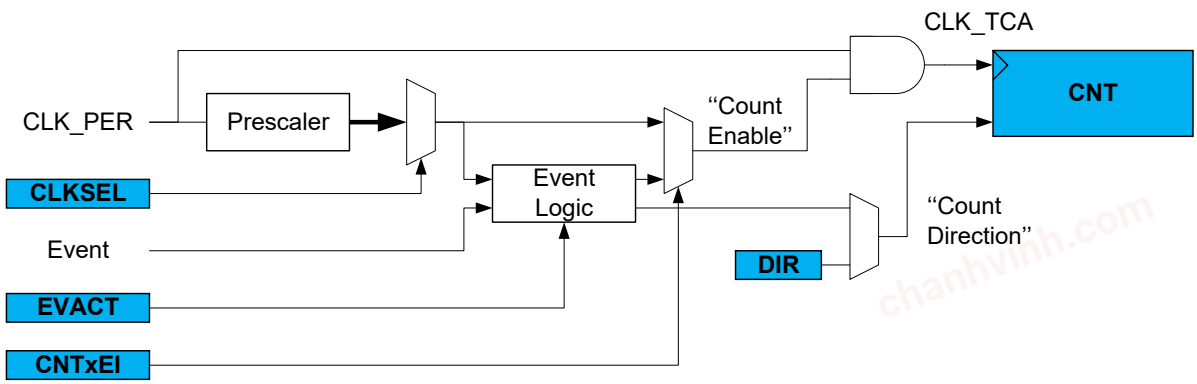

21.2.2 Signal Description

Signal	Description	Type
WOn	Digital output	Waveform output

21.3 Functional Description

21.3.1 Definitions

The following definitions are used throughout the documentation:

Table 21-1. Timer/Counter Definitions

Name	Description
BOTTOM	The counter reaches BOTTOM when it becomes 0x0000
MAX	The counter reaches MAXimum when it becomes all ones
TOP	The counter reaches TOP when it becomes equal to the highest value in the count sequence
UPDATE	The update condition is met when the timer/counter reaches BOTTOM or TOP, depending on the Waveform Generator mode. Buffered registers with valid buffer values will be updated unless the Lock Update (LUPD) bit in the TCAn.CTRLE register has been set.
CNT	Counter register value
CMP	Compare register value
PER	Period register value

chanhvinh.com

In general, the term timer is used when the timer/counter is counting periodic clock ticks. The term counter is used when the input signal has sporadic or irregular ticks. The latter can be the case when counting events.

21.3.2 Initialization

To start using the timer/counter in a basic mode, follow these steps:

1. Write a TOP value to the Period (TCAn.PER) register.
2. Enable the peripheral by writing a '1' to the Enable (ENABLE) bit in the Control A (TCAn.CTRLA) register. The counter will start counting clock ticks according to the prescaler setting in the Clock Select (CLKSEL) bit field in TCAn.CTRLA.
3. Optional: By writing a '1' to the Enable Counter Event Input A (CNTAEI) bit in the Event Control (TCAn.EVCTRL) register, events are counted instead of clock ticks.
4. The counter value can be read from the Counter (CNT) bit field in the Counter (TCAn.CNT) register.

21.3.3 Operation

21.3.3.1 Normal Operation

In normal operation the counter is counting clock ticks in the direction selected by the Direction (DIR) bit in the Control E (TCAn.CTRLE) register until it reaches TOP or BOTTOM. The clock ticks are given by the peripheral clock (CLK_PER), prescaled according to the Clock Select (CLKSEL) bit field in the Control A (TCAn.CTRLA) register.

When TOP is reached while the counter is counting up, the counter will wrap to '0' at the next clock tick. When counting down, the counter is reloaded with the Period (TCAn.PER) register value when the BOTTOM is reached.

Figure 21-4. Normal Operation

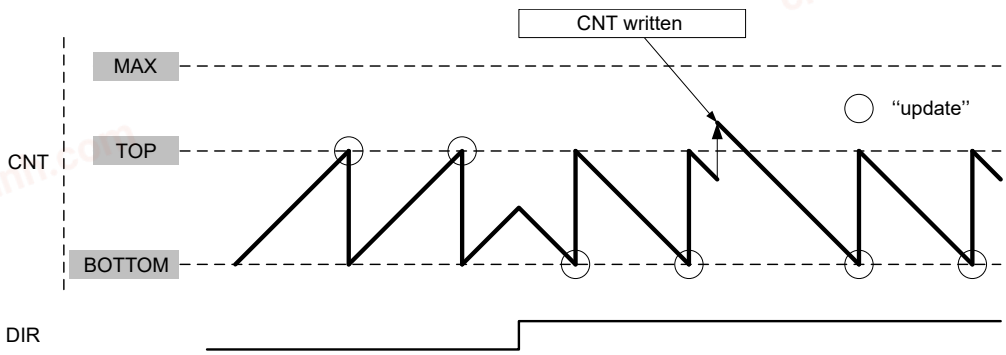

It is possible to change the counter value in the Counter (TCAn.CNT) register when the counter is running. The write access to TCAn.CNT register has higher priority than count, clear or reload, and will be immediate. The direction of the counter can also be changed during normal operation by writing to the Direction (DIR) bit in the Control E (TCAn.CTRLE) register.

21.3.3.2 Double Buffering

The Period (TCAn.PER) register value and the Compare n (TCAn.CMPn) register values are all double-buffered (TCAn.PERBUF and TCAn.CMPnBUF).

Each buffer register has a Buffer Valid (BV) flag (PERBV, CMPnBV) in the Control F (TCAn.CTRLF) register, which indicates that the buffer register contains a valid (new) value that can be copied into the corresponding Period or Compare register. When the Period register and Compare n registers are used for a compare operation, the BV flag is set when data are written to the buffer register and cleared on an UPDATE condition. This is shown for a Compare (CMPn) register in the figure below.

© 2021 Microchip Technology Inc. and its subsidiaries

chanhvinh.com

Figure 21-5. Period and Compare Double Buffering

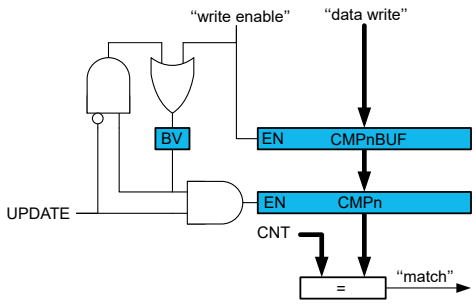

Both the TCAn.CMPn and TCAn.CMPnBUF registers are available as I/O registers. This allows the initialization and bypassing of the buffer register and the double-buffering function.

21.3.3.3 Changing the Period

The Counter period is changed by writing a new TOP value to the Period (TCAn.PER) register.

No Buffering: If double-buffering is not used, any period update is immediate.

Figure 21-6. Changing the Period Without Buffering

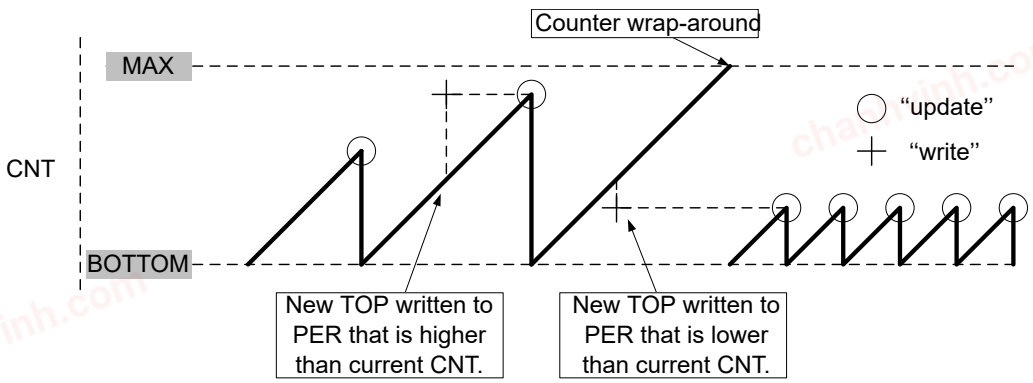

A counter wrap-around can occur in any mode of operation when counting up without buffering, as the TCAn.CNT and TCAn.PER registers are continuously compared. If a new TOP value is written to TCAn.PER that is lower than the current TCAn.CNT, the counter will wrap first, before a compare match occurs.

Figure 21-7. Unbuffered Dual-Slope Operation

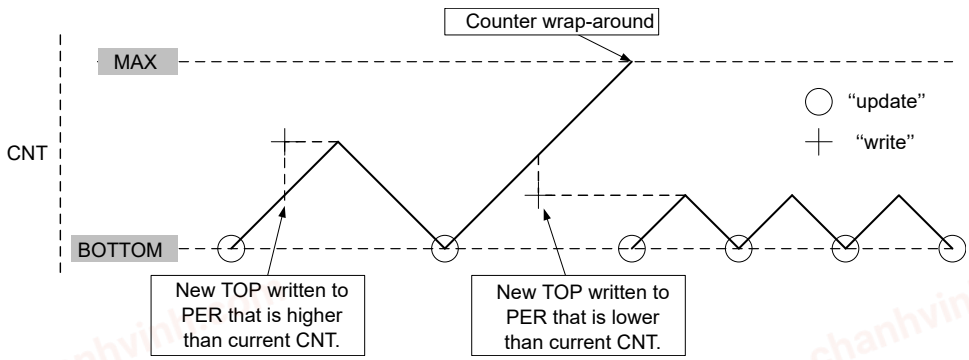

With Buffering: When double-buffering is used, the buffer can be written at any time and still maintain the correct operation. The TCAn.PER is always updated on the UPDATE condition, as shown for dual-slope operation in the figure below. This prevents wrap-around and the generation of odd waveforms.

chanhvinh.com

Figure 21-8. Changing the Period Using Buffering

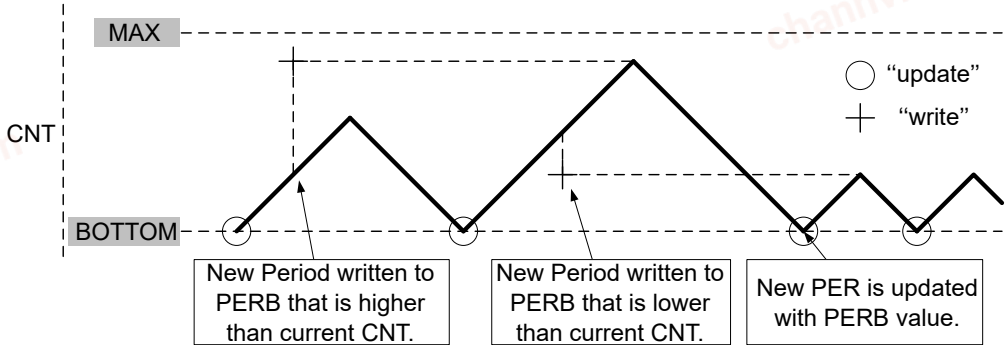

Note: Buffering is used in figures illustrating TCA operation if not otherwise specified.

21.3.3.4 Compare Channel

Each Compare Channel n continuously compares the counter value (TCAn.CNT) with the Compare n (TCAn.CMPn) register. If TCAn.CNT equals TCAn.CMPn the Comparator n signals a match. The match will set the Compare Channel's interrupt flag at the next timer clock cycle, and the optional interrupt is generated.

The Compare n Buffer (TCAn.CMPnBUF) register provides double-buffer capability equivalent to that for the period buffer. The double-buffering synchronizes the update of the TCAn.CMPn register with the buffer value to either the TOP or BOTTOM of the counting sequence, according to the UPDATE condition. The synchronization prevents the occurrence of odd-length, non-symmetrical pulses for glitch-free output.

The value in CMPnBUF is moved to CMPn at the UPDATE condition and is compared to the counter value (TCAn.CNT) from the next count.

21.3.3.4.1 Waveform Generation

The compare channels can be used for waveform generation on the corresponding port pins. The following requirements must be met to make the waveform visible on the connected port pin:

1. A Waveform Generation mode must be selected by writing the Waveform Generation Mode (WGMODE) bit field in the TCAn.CTRLB register.
2. The compare channels used must be enabled (CMPnEN = `1` in TCAn.CTRLB). This will override the output value for the corresponding pin. An alternative pin can be selected by configuring the Port Multiplexer (PORTMUX). Refer to the *PORTMUX* section for details.
3. The direction for the associated port pin n must be configured in the Port peripheral as an output.
4. Optional: Enable the inverted waveform output for the associated port pin n. Refer to the *PORT* section for details.

21.3.3.4.2 Frequency (FRQ) Waveform Generation

For frequency generation, the period time (T) is controlled by the TCAn.CMP0 register instead of the Period (TCAn.PER) register. The corresponding waveform generator output is toggled on each compare match between the TCAn.CNT and TCAn.CMPn registers.

Figure 21-9. Frequency Waveform Generation

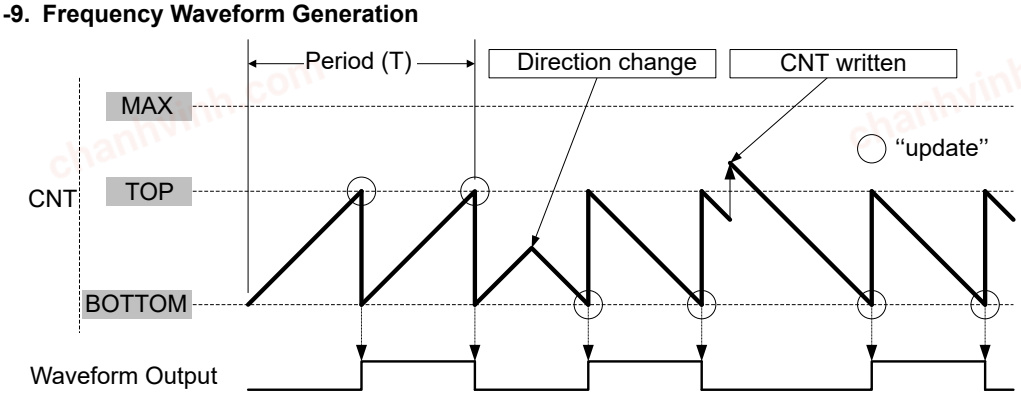

The following equation defines the waveform frequency (f_{FRQ}):

chanhvinh.com

$$f_{FRQ} = \frac{f_{CLK_PER}}{2N(CMP0+1)}$$

where *N* represents the prescaler divider used (see the CLKSEL bit field in the TCAn.CTRLA register), and f_{CLK_PER} is the peripheral clock frequency.

The maximum frequency of the waveform generated is half of the peripheral clock frequency (f_{CLK_PER}/2) when TCAn.CMP0 is written to 0x0000 and no prescaling is used (*N* = 1, CLKSEL = 0x0 in TCAn.CTRLA).

Use the TCAn.CMP1 and TCAn.CMP2 registers to get additional waveform outputs WOn. The waveforms WOn can either be identical or offset to WO0. The offset can be influenced by TCAn.CMPn, TCAn.CNT and the count direction. The offset in seconds t_{Offset} can be calculated using the equations in the table below. The equations are only valid when CMPn<CMP0.

Table 21-2. Offset equation overview

Equation	Count Direction	CMPn vs CNT State	Offset
$t_{Offset} = \left(\frac{CMP0 - CMPn}{CMP0 + 1}\right)\left(\frac{T}{2}\right)$	UP	CMPn≥CNT	WOn leading WO0
	DOWN	CMP0≤CNT	WOn trailing WO0
		CMP0>CNT and CMPn>CNT	WOn trailing WO0
$t_{Offset} = \left(\frac{CMPn + 1}{CMP0 + 1}\right)\left(\frac{T}{2}\right)$	UP	CMPn<CNT	WOn trailing WO0
	DOWN	CMPn≤CNT	WOn leading WO0

The figure below shows leading and trailing offset for WOn, where both equations can be used. The correct equation is determined by count direction, and the state of CMPn vs CNT when the timer is enabled or CMPn is changed.

Figure 21-10. Offset When Counting Up

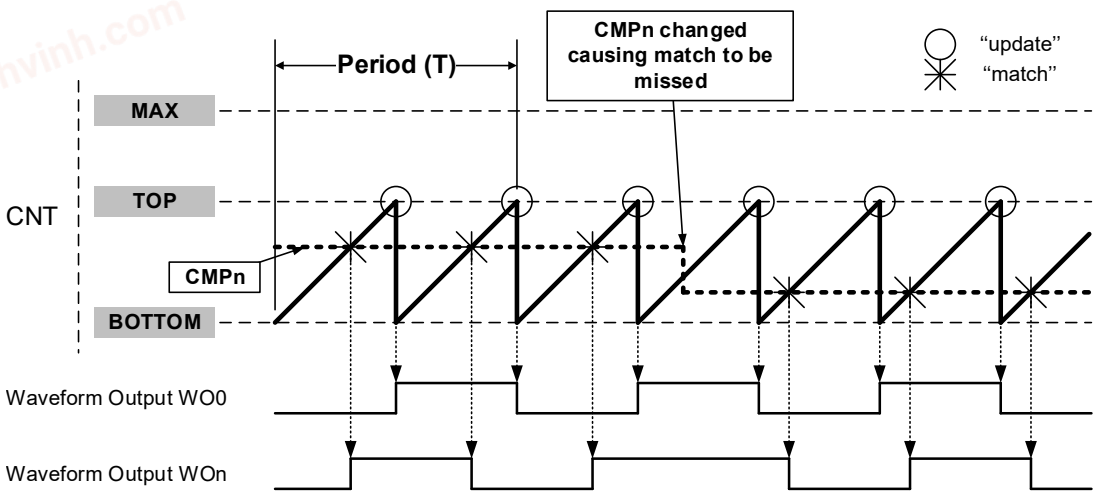

The figure below shows how the waveform can be inverted by changing CMPn during run-time.

chanhvinh.com

Figure 21-11. Inverting Waveform Output

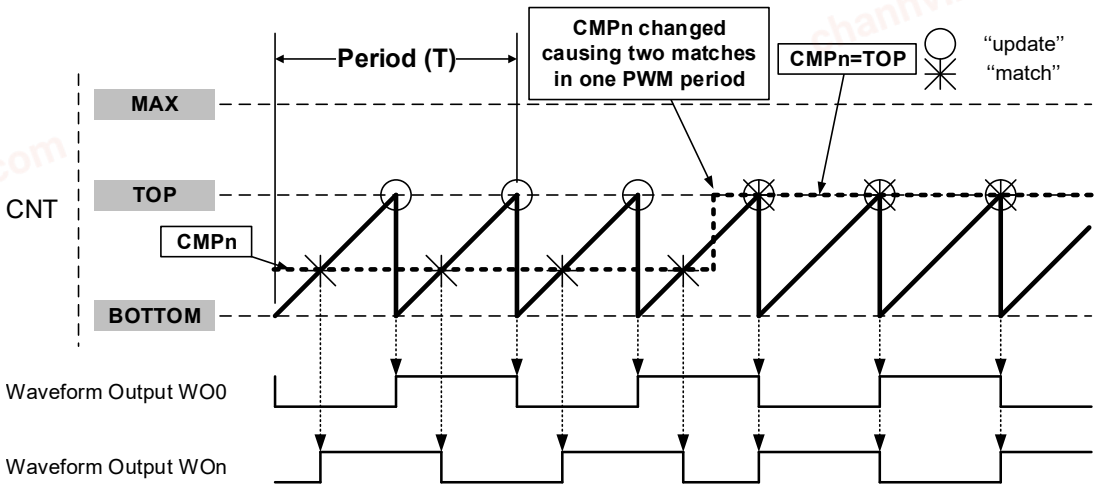

21.3.3.4.3 Single-Slope PWM Generation

For single-slope Pulse-Width Modulation (PWM) generation, the period (T) is controlled by the TCAn.PER register, while the values of the TCAn.CMPn registers control the duty cycles of the generated waveforms. The figure below shows how the counter counts from BOTTOM to TOP and then restarts from BOTTOM. The waveform generator output is set at BOTTOM and cleared on the compare match between the TCAn.CNT and TCAn.CMPn registers.

CMPn = BOTTOM will produce a static low signal on WOn while CMPn > TOP will produce a static high signal on WOn.

Figure 21-12. Single-Slope Pulse-Width Modulation

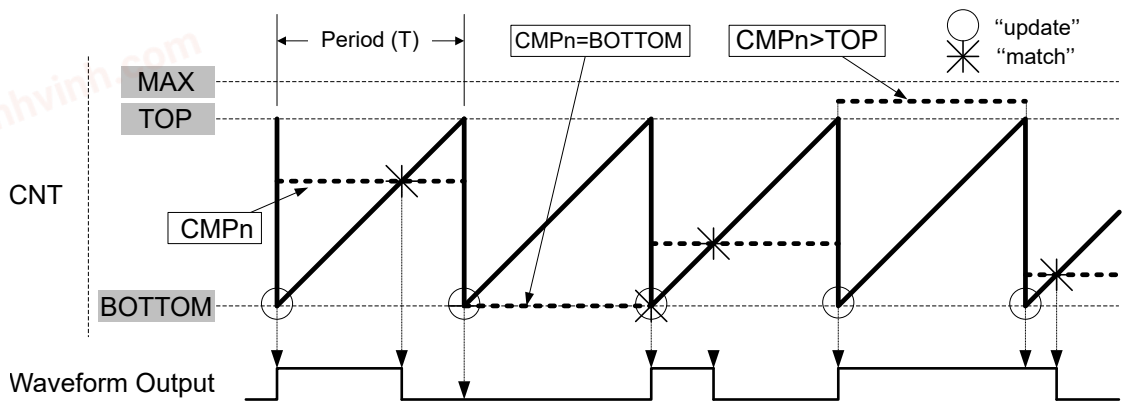

Notes:

1. The representation in the figure above is valid when CMPn is updated using CMPnBUF.
2. For single-slope Pulse-Width Modulation (PWM) generation, the counter counting from TOP to BOTTOM is not supported.

The TCAn.PER register defines the PWM resolution. The minimum resolution is 2 bits (TCAn.PER = 0x0003), and the maximum resolution is 16 bits (TCAn.PER = MAX).

The following equation calculates the exact resolution in bits for single-slope PWM (R_{PWM_SS}):

$$R_{PWM_SS} = \frac{\log(PER+1)}{\log(2)}$$

The single-slope PWM frequency (f_{PWM_SS}) depends on the period setting (TCAn.PER), the peripheral clock frequency f_{CLK_PER} and the TCA prescaler (the CLKSEL bit field in the TCAn.CTRLA register). It is calculated by the following equation where *N* represents the prescaler divider used:

$$f_{PWM_SS} = \frac{f_{CLK_PER}}{N(PER+1)}$$

chanhvinh.com

21.3.3.4.4 Dual-Slope PWM

For the dual-slope PWM generation, the period (T) is controlled by TCAn.PER, while the values of TCAn.CMPn control the duty cycle of the WG output.

The figure below shows how, for dual-slope PWM, the counter repeatedly counts from BOTTOM to TOP and then from TOP to BOTTOM. The waveform generator output is set at BOTTOM, cleared on compare match when up-counting, and set on compare match when down-counting.

CMPn = BOTTOM produces a static low signal on WOn, while CMPn = TOP produces a static high signal on WOn.

Figure 21-13. Dual-Slope Pulse-Width Modulation

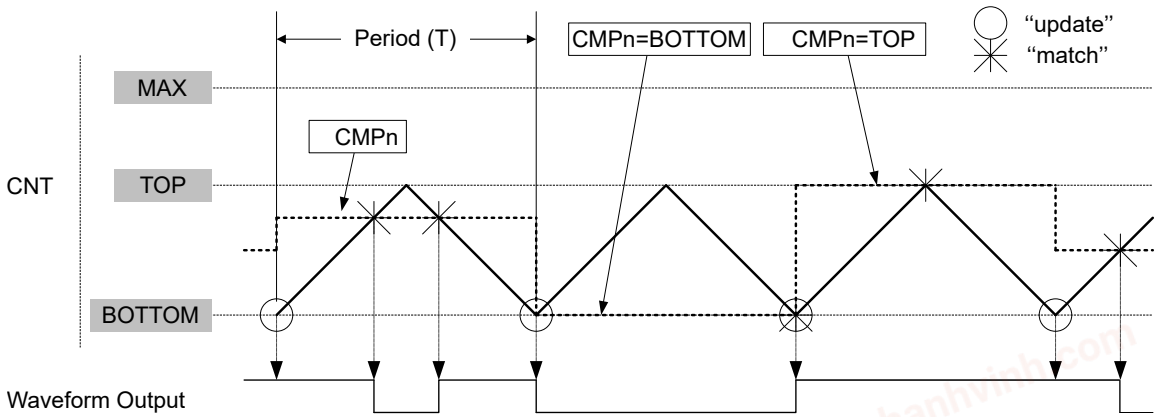

Note: The representation in the figure above is valid when CMPn is updated using CMPnBUF.

The Period (TCAn.PER) register defines the PWM resolution. The minimum resolution is 2 bits (TCAn.PER = 0x0003), and the maximum resolution is 16 bits (TCAn.PER = MAX).

The following equation calculates the exact resolution in bits for dual-slope PWM (R_{PWM_DS}):

$$R_{PWM_DS} = \frac{\log(PER+1)}{\log(2)}$$

The PWM frequency depends on the period setting in the TCAn.PER register, the peripheral clock frequency (f_{CLK_PER}), and the prescaler divider selected in the CLKSEL bit field in the TCAn.CTRLA register. It is calculated by the following equation:

$$f_{PWM_DS} = \frac{f_{CLK_PER}}{2N \cdot PER}$$

N represents the prescaler divider used.

Using dual-slope PWM results in approximately half the maximum operation frequency compared to single-slope PWM operation, due to twice the number of timer increments per period.

21.3.3.4.5 Port Override for Waveform Generation

To make the waveform generation available on the port pins, the corresponding port pin direction must be set as output (PORTx.DIR[n] = `1`). The TCA will override the port pin values when the compare channel is enabled (CMPnEN = `1` in the TCAn.CTRLB register), and a Waveform Generation mode is selected.

The figure below shows the port override for TCA. The timer/counter compare channel will override the port pin output value (PORTx.OUT) on the corresponding port pin. Enabling inverted I/O on the port pin (INVEN = `1` in the PORTx.PINnCTRL register) inverts the corresponding WG output.

Figure 21-14. Port Override for Timer/Counter Type A

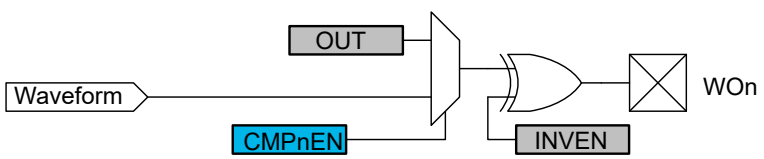

chanhvinh.com

21.3.3.5 Timer/Counter Commands

A set of commands can be issued by software to immediately change the state of the peripheral. These commands give direct control of the UPDATE, RESTART and RESET signals. A command is issued by writing the respective value to the Command (CMD) bit field in the Control E (TCAn.CTRLESET) register.

An UPDATE command has the same effect as when an UPDATE condition occurs, except that the UPDATE command is not affected by the state of the Lock Update (LUPD) bit in the Control E (TCAn.CTRLE) register.

The software can force a restart of the current waveform period by issuing a RESTART command. In this case, the counter, direction, and all compare outputs are set to '0'.

A RESET command will set all timer/counter registers to their initial values. A RESET command can be issued only when the timer/counter is not running (ENABLE = 0 in the TCAn.CTRLA register).

21.3.3.6 Split Mode - Two 8-Bit Timer/Counters

Split Mode Overview

To double the number of timers and PWM channels in the TCA, a Split mode is provided. In this Split mode, the 16-bit timer/counter acts as two separate 8-bit timers, which each have three compare channels for PWM generation. The Split mode will only work with single-slope down-count. Event controlled operation is not supported in Split mode.

The figure below shows single-slope PWM generation in Split mode. The waveform generator output is cleared at BOTTOM, and set on compare match between the counter value (TCAn.CNT) and the Compare n (TCAn.CMPn) register.

Figure 21-15. Single-Slope Pulse-Width Modulation in Split mode

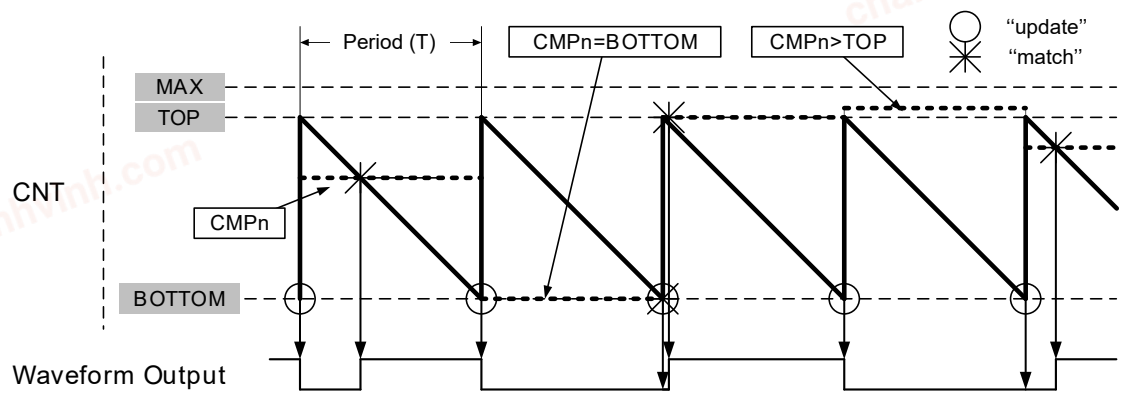

Note: The maximum duty-cycle of the waveform output is TOP/(TOP+1)

Activating Split mode results in changes to the functionality of some registers and register bits. The modifications are described in a separate register map (see 21.6 Register Summary - Split Mode).

Split Mode Differences Compared to Normal Mode

- Count:
  - Down-count only
  - Low Byte Timer Counter (TCAn.LCNT) register and High Byte Timer Counter (TCAn.HCNT) register are independent
- Waveform generation:
  - Single-slope PWM only (WGMODE = SINGLESLOPE in the TCAn.CTRLB register)
- Interrupt:
  - No change for Low Byte Timer Counter (TCAn.LCNT) register
  - Underflow interrupt for High Byte Timer Counter (TCAn.HCNT) register
  - No compare interrupt or flag for High Byte Compare n (TCAn.HCMPn) register
- Event Actions: Not compatible
- Buffer registers and buffer valid flags: Unused

© 2021 Microchip Technology Inc. and its subsidiaries

chanhvinh.com

- Register Access: Byte access to all registers

Block Diagram

Figure 21-16. Timer/Counter Block Diagram Split Mode

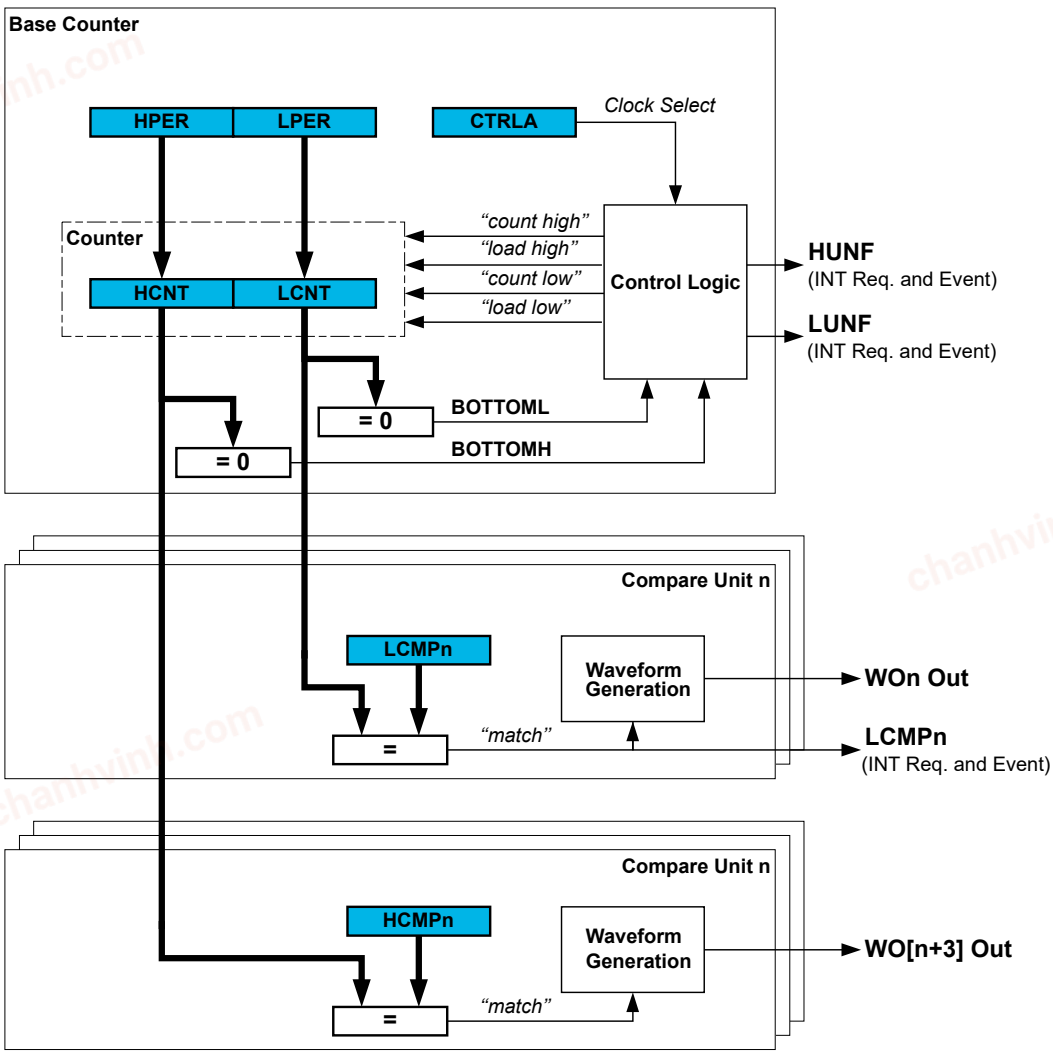

Split Mode Initialization

When shifting between Normal mode and Split mode, the functionality of some registers and bits changes, but their values do not. For this reason, disabling the peripheral (ENABLE = 0 in the TCAn.CTRLA register) and doing a hard Reset (CMD = RESET in the TCAn.CTRLESET register) is recommended when changing the mode to avoid unexpected behavior.

To start using the timer/counter in basic Split mode after a hard Reset, follow these steps:

1. Enable Split mode by writing a '1' to the Split mode enable (SPLITM) bit in the Control D (TCAn.CTRLD) register.
2. Write a TOP value to the Period (TCAn.PER) registers.
3. Enable the peripheral by writing a '1' to the Enable (ENABLE) bit in the Control A (TCAn.CTRLA) register. The counter will start counting clock ticks according to the prescaler setting in the Clock Select (CLKSEL) bit field in the TCAn.CTRLA register.
4. The counter values can be read from the Counter bit field in the Counter (TCAn.CNT) registers.

© 2021 Microchip Technology Inc.
and its subsidiaries

chanhvinh.com

21.3.4 Events

The TCA can generate the events described in the table below. All event generators except TCAn_HUNF are shared between Normal mode and Split mode operation, and the generator name indicates what specific signal the generator represents in each mode in the following way: OVF_LUNF corresponds to overflow in Normal mode and Low byte timer underflow in Split mode. The same applies to CMPn_LCMPn.

Table 21-3. Event Generators in TCA

Generator Name		Description	Event Type	Generating Clock Domain	Length of Event
Peripheral	Event				
TCAn	OVF_LUNF	Normal mode: Overflow Split mode: Low byte timer underflow	Pulse	CLK_PER	One CLK_PER period
	HUNF	Normal mode: Not available Split mode: High byte timer underflow	Pulse	CLK_PER	One CLK_PER period
	CMP0_LCMP0	Normal mode: Compare Channel 0 match Split mode: Low byte timer Compare Channel 0 match	Pulse	CLK_PER	One CLK_PER period
	CMP1_LCMP1	Normal mode: Compare Channel 1 match Split mode: Low byte timer Compare Channel 1 match	Pulse	CLK_PER	One CLK_PER period
	CMP2_LCMP2	Normal mode: Compare Channel 2 match Split mode: Low byte timer Compare Channel 2 match	Pulse	CLK_PER	One CLK_PER period

Note: The conditions for generating an event are identical to those that will raise the corresponding interrupt flag in the TCAn.INTFLAGS register for both Normal mode and Split mode.

The TCA has two event users for detecting and acting upon input events. The table below describes the event users and their associated functionality.

chanhvinh.com

chanhvinh.com

Table 21-4. Event Users in TCA

User Name		Description	Input Detection	Async/Sync
Peripheral	Input			
TCAn	CNTA	Count on a positive event edge	Edge	Sync
		Count on any event edge	Edge	Sync
		Count while the event signal is high	Level	Sync
		The event level controls the count direction, up when low and down when high	Level	Sync
	CNTB	The event level controls count direction, up when low and down when high	Level	Sync
		Restart counter on a positive event edge	Edge	Sync
		Restart counter on any event edge	Edge	Sync
		Restart counter while the event signal is high	Level	Sync

The specific actions described in the table above are selected by writing to the Event Action (EVACTA, EVACTB) bits in the Event Control (TCAn.EVCTRL) register. Input events are enabled by writing a '1' to the Enable Counter Event Input (CNTAEI and CNTBEI) bits in the TCAn.EVCTRL register.

If both EVACTA and EVACTB are configured to control the count direction, the event signals will be OR'ed to determine the count direction. Both event inputs must then be low for the counter to count upwards.

Notes:

1. Event inputs are not used in Split mode.
2. Event actions with level input detection only work reliably if the event frequency is less than the timer's frequency.

Refer to the *Event System (EVSYS)* section for more details regarding event types and Event System configuration.

21.3.5 Interrupts

Table 21-5. Available Interrupt Vectors and Sources in Normal Mode

Name	Vector Description	Conditions
OVF	Overflow or underflow interrupt	The counter has reached TOP or BOTTOM
CMP0	Compare Channel 0 interrupt	Match between the counter value and the Compare 0 register
CMP1	Compare Channel 1 interrupt	Match between the counter value and the Compare 1 register
CMP2	Compare Channel 2 interrupt	Match between the counter value and the Compare 2 register

Table 21-6. Available Interrupt Vectors and Sources in Split Mode

Name	Vector Description	Conditions
LUNF	Low-byte Underflow interrupt	Low byte timer reaches BOTTOM
HUNF	High-byte Underflow interrupt	High byte timer reaches BOTTOM
LCMP0	Compare Channel 0 interrupt	Match between the counter value and the low byte of the Compare 0 register
LCMP1	Compare Channel 1 interrupt	Match between the counter value and the low byte of the Compare 1 register

© 2021 Microchip Technology Inc. and its subsidiaries

chanhvinh.com

.....continued		
Name	**Vector Description**	**Conditions**
LCMP2	Compare Channel 2 interrupt	Match between the counter value and the low byte of the Compare 2 register

When an interrupt condition occurs, the corresponding interrupt flag is set in the peripheral's Interrupt Flags (*peripheral*.INTFLAGS) register.

An interrupt source is enabled or disabled by writing to the corresponding enable bit in the peripheral's Interrupt Control (*peripheral*.INTCTRL) register.

An interrupt request is generated when the corresponding interrupt source is enabled, and the interrupt flag is set. The interrupt request remains active until the interrupt flag is cleared. See the peripheral's INTFLAGS register for details on how to clear interrupt flags.

21.3.6 Sleep Mode Operation

TCA is by default disabled in Standby sleep mode. It will be halted as soon as the sleep mode is entered.

The module can stay fully operational in Standby sleep mode if the Run Standby (RUNSTDBY) bit in the TCAn.CTRLA register is written to '1'.

All operation is halted in Power-Down sleep mode.

chanhvinh.com

chanhvinh.com

21.4 Register Summary - Normal Mode

Offset	Name	Bit Pos.	7	6	5	4	3	2	1	0
0x00	CTRLA	7:0	RUNSTDBY				CLKSEL[2:0]			ENABLE
0x01	CTRLB	7:0		CMP2EN	CMP1EN	CMP0EN	ALUPD	WGMODE[2:0]		
0x02	CTRLC	7:0						CMP2OV	CMP1OV	CMP0OV
0x03	CTRLD	7:0								SPLITM
0x04	CTRLECLR	7:0					CMD[1:0]		LUPD	DIR
0x05	CTRLESET	7:0					CMD[1:0]		LUPD	DIR
0x06	CTRLFCLR	7:0					CMP2BV	CMP1BV	CMP0BV	PERBV
0x07	CTRLFSET	7:0					CMP2BV	CMP1BV	CMP0BV	PERBV
0x08	Reserved									
0x09	EVCTRL	7:0		EVACTB[2:0]		CNTBEI		EVACTA[2:0]		CNTAEI
0x0A	INTCTRL	7:0		CMP2	CMP1	CMP0				OVF
0x0B	INTFLAGS	7:0		CMP2	CMP1	CMP0				OVF
0x0C ... 0x0D	Reserved									
0x0E	DBGCTRL	7:0								DBGRUN
0x0F	TEMP	7:0	TEMP[7:0]							
0x10 ... 0x1F	Reserved									
0x20	CNT	7:0	CNT[7:0]							
		15:8	CNT[15:8]							
0x22 ... 0x25	Reserved									
0x26	PER	7:0	PER[7:0]							
		15:8	PER[15:8]							
0x28	CMP0	7:0	CMP[7:0]							
		15:8	CMP[15:8]							
0x2A	CMP1	7:0	CMP[7:0]							
		15:8	CMP[15:8]							
0x2C	CMP2	7:0	CMP[7:0]							
		15:8	CMP[15:8]							
0x2E ... 0x35	Reserved									
0x36	PERBUF	7:0	PERBUF[7:0]							
		15:8	PERBUF[15:8]							
0x38	CMP0BUF	7:0	CMPBUF[7:0]							
		15:8	CMPBUF[15:8]							
0x3A	CMP1BUF	7:0	CMPBUF[7:0]							
		15:8	CMPBUF[15:8]							
0x3C	CMP2BUF	7:0	CMPBUF[7:0]							
		15:8	CMPBUF[15:8]							

21.5 Register Description - Normal Mode

© 2021 Microchip Technology Inc.
and its subsidiaries

chanhvinh.com

21.5.1 Control A - Normal Mode

Name: CTRLA
Offset: 0x00
Reset: 0x00
Property: -

Bit	7	6	5	4	3	2	1	0
	RUNSTDBY				CLKSEL[2:0]			ENABLE
Access	R/W				R/W	R/W	R/W	R/W
Reset	0				0	0	0	0

Bit 7 – RUNSTDBY Run Standby
Writing a '1' to this bit will enable the peripheral to run in Standby sleep mode.

Bits 3:1 – CLKSEL[2:0] Clock Select
These bits select the clock frequency for the timer/counter.

Value	Name	Description
0x0	DIV1	$f_{TCA} = f_{CLK_PER}$
0x1	DIV2	$f_{TCA} = f_{CLK_PER}/2$
0x2	DIV4	$f_{TCA} = f_{CLK_PER}/4$
0x3	DIV8	$f_{TCA} = f_{CLK_PER}/8$
0x4	DIV16	$f_{TCA} = f_{CLK_PER}/16$
0x5	DIV64	$f_{TCA} = f_{CLK_PER}/64$
0x6	DIV256	$f_{TCA} = f_{CLK_PER}/256$
0x7	DIV1024	$f_{TCA} = f_{CLK_PER}/1024$

Bit 0 – ENABLE Enable

Value	Description
0	The peripheral is disabled
1	The peripheral is enabled

chanhvinh.com

21.5.2 Control B - Normal Mode

Name: CTRLB
Offset: 0x01
Reset: 0x00
Property: -

Bit	7	6	5	4	3	2	1	0
		CMP2EN	CMP1EN	CMP0EN	ALUPD	WGMODE[2:0]		
Access		R/W	R/W	R/W	R/W	R/W	R/W	R/W
Reset		0	0	0	0	0	0	0

Bits 4, 5, 6 – CMPEN Compare n Enable
In the FRQ and PWM Waveform Generation modes, the Compare n Enable (CMPnEN) bits will make the waveform output available on the pin corresponding to WOn, overriding the value in the corresponding PORT output register. The corresponding pin direction must be configured as an output in the PORT peripheral.

Value	Description
0	Waveform output WOn will not be available on the corresponding pin
1	Waveform output WOn will override the output value of the corresponding pin

Bit 3 – ALUPD Auto-Lock Update
The Auto-Lock Update bit controls the Lock Update (LUPD) bit in the TCAn.CTRLE register. When ALUPD is written to '1', the LUPD bit will be set to '1' until the Buffer Valid (CMPnBV) bits of all enabled compare channels are '1'. This condition will clear the LUPD bit.
It will remain cleared until the next UPDATE condition, where the buffer values will be transferred to the CMPn registers, and the LUPD bit will be set to '1' again. This makes sure that the CMPnBUF register values are not transferred to the CMPn registers until all enabled compare buffers are written.

Value	Description
0	LUPD bit in the TCAn.CTRLE register is not altered by the system
1	LUPD bit in the TCAn.CTRLE register is set and cleared automatically

Bits 2:0 – WGMODE[2:0] Waveform Generation Mode
This bit field selects the Waveform Generation mode and controls the counting sequence of the counter, TOP value, UPDATE condition, Interrupt condition, and the type of waveform generated.
No waveform generation is performed in the Normal mode of operation. For all other modes, the waveform generator output will only be directed to the port pins if the corresponding CMPnEN bit has been set. The port pin direction must be set as output.

Table 21-7. Timer Waveform Generation Mode

Value	Group Configuration	Mode of Operation	TOP	UPDATE	OVF
0x0	NORMAL	Normal	PER	TOP(1)	TOP(1)
0x1	FRQ	Frequency	CMP0	TOP(1)	TOP(1)
0x2	-	Reserved	-	-	-
0x3	SINGLESLOPE	Single-slope PWM	PER	BOTTOM	BOTTOM
0x4	-	Reserved	-	-	-
0x5	DSTOP	Dual-slope PWM	PER	BOTTOM	TOP
0x6	DSBOTH	Dual-slope PWM	PER	BOTTOM	TOP and BOTTOM
0x7	DSBOTTOM	Dual-slope PWM	PER	BOTTOM	BOTTOM

Note:
1. When counting up.

© 2021 Microchip Technology Inc. and its subsidiaries

chanhvinh.com

21.5.3 Control C - Normal Mode

Name: CTRLC
Offset: 0x02
Reset: 0x00
Property: -

Bit	7	6	5	4	3	2	1	0
						CMP2OV	CMP1OV	CMP0OV
Access						R/W	R/W	R/W
Reset						0	0	0

Bit 2 – CMP2OV Compare Output Value 2
See CMP0OV.

Bit 1 – CMP1OV Compare Output Value 1
See CMP0OV.

Bit 0 – CMP0OV Compare Output Value 0
The CMPnOV bits allow direct access to the waveform generator's output compare value when the timer/counter is not enabled. This is used to set or clear the WG output value when the timer/counter is not running.

Note: When the output is connected to the pad, overriding these bits will not work unless the CMPnEN bits in the TCAn.CTRLB register have been set. If the output is connected to CCL, the CMPnEN bits in the TCAn.CTRLB register are bypassed.

chanhvinh.com

chanhvinh.com

21.5.4 Control D - Normal Mode

Name: CTRLD
Offset: 0x03
Reset: 0x00
Property: -

Bit	7	6	5	4	3	2	1	0
								SPLITM
Access								R/W
Reset								0

Bit 0 – SPLITM Enable Split Mode
This bit sets the timer/counter in Split mode operation and will work as two 8-bit timer/counters. The register map will change compared to the normal 16-bit mode.

chanhvinh.com

21.5.5 Control Register E Clear - Normal Mode

Name: CTRLECLR
Offset: 0x04
Reset: 0x00
Property: -

Use this register instead of a Read-Modify-Write (RMW) to clear individual bits by writing a '1' to its bit location.

Bit	7	6	5	4	3	2	1	0
					CMD[1:0]		LUPD	DIR
Access					R/W	R/W	R/W	R/W
Reset					0	0	0	0

Bits 3:2 – CMD[1:0] Command
This bit field is used for software control of update, restart, and Reset of the timer/counter. The command bit field is always read as '0'.

Value	Name	Description
0x0	NONE	No command
0x1	UPDATE	Force update
0x2	RESTART	Force restart
0x3	RESET	Force hard Reset (ignored if the timer/counter is enabled)

Bit 1 – LUPD Lock Update
Lock update can be used to ensure that all buffers are valid before an update is performed.

Value	Description
0	The buffered registers are updated as soon as an UPDATE condition has occurred
1	No update of the buffered registers is performed, even though an UPDATE condition has occurred. This setting will not prevent an update issued by the Command bit field.

Bit 0 – DIR Counter Direction
Normally this bit is controlled in hardware by the Waveform Generation mode or by event actions, but can also be changed from the software.

Value	Description
0	The counter is counting up (incrementing)
1	The counter is counting down (decrementing)

chanhvinh.com

21.5.6 Control Register E Set - Normal Mode

Name: CTRLESET
Offset: 0x05
Reset: 0x00
Property: -

Use this register instead of a Read-Modify-Write (RMW) to set individual bits by writing a '1' to its bit location.

Bit	7	6	5	4	3	2	1	0
					CMD[1:0]		LUPD	DIR
Access					R/W	R/W	R/W	R/W
Reset					0	0	0	0

Bits 3:2 – CMD[1:0] Command
This bit field is used for software control of update, restart, and Reset of the timer/counter. The command bit field is always read as '0'.

Value	Name	Description
0x0	NONE	No command
0x1	UPDATE	Force update
0x2	RESTART	Force restart
0x3	RESET	Force hard Reset (ignored if the timer/counter is enabled)

Bit 1 – LUPD Lock Update
Locking the update ensures that all buffers are valid before an update is performed.

Value	Description
0	The buffered registers are updated as soon as an UPDATE condition has occurred
1	No update of the buffered registers is performed, even though an UPDATE condition has occurred. This setting will not prevent an update issued by the Command bit field.

Bit 0 – DIR Counter Direction
Normally this bit is controlled in hardware by the Waveform Generation mode or by event actions, but can also be changed from the software.

Value	Description
0	The counter is counting up (incrementing)
1	The counter is counting down (decrementing)

chanhvinh.com

21.5.7 Control Register F Clear

Name: CTRLFCLR
Offset: 0x06
Reset: 0x00
Property: -

Use this register instead of a Read-Modify-Write (RMW) to clear individual bits by writing a '1' to its bit location.

Bit	7	6	5	4	3	2	1	0
					CMP2BV	CMP1BV	CMP0BV	PERBV
Access					R/W	R/W	R/W	R/W
Reset					0	0	0	0

Bit 3 – CMP2BV Compare 2 Buffer Valid
See CMP0BV.

Bit 2 – CMP1BV Compare 1 Buffer Valid
See CMP0BV.

Bit 1 – CMP0BV Compare 0 Buffer Valid
The CMPnBV bits are set when a new value is written to the corresponding TCAn.CMPnBUF register. These bits are automatically cleared on an UPDATE condition.

Bit 0 – PERBV Period Buffer Valid
This bit is set when a new value is written to the TCAn.PERBUF register. This bit is automatically cleared on an UPDATE condition.

© 2021 Microchip Technology Inc.
and its subsidiaries

chanhvinh.com

21.5.8 Control Register F Set

Name: CTRLFSET
Offset: 0x07
Reset: 0x00
Property: -

Use this register instead of a Read-Modify-Write (RMW) to set individual bits by writing a '1' to its bit location.

Bit	7	6	5	4	3	2	1	0
					CMP2BV	CMP1BV	CMP0BV	PERBV
Access					R/W	R/W	R/W	R/W
Reset					0	0	0	0

Bit 3 – CMP2BV Compare 2 Buffer Valid
See CMP0BV.

Bit 2 – CMP1BV Compare 1 Buffer Valid
See CMP0BV.

Bit 1 – CMP0BV Compare 0 Buffer Valid
The CMPnBV bits are set when a new value is written to the corresponding TCAn.CMPnBUF register. These bits are automatically cleared on an UPDATE condition.

Bit 0 – PERBV Period Buffer Valid
This bit is set when a new value is written to the TCAn.PERBUF register. This bit is automatically cleared on an UPDATE condition.

© 2021 Microchip Technology Inc.
and its subsidiaries

chanhvinh.com

21.5.9 Event Control

Name: EVCTRL
Offset: 0x09
Reset: 0x00
Property: -

Bit	7	6	5	4	3	2	1	0
	EVACTB[2:0]			CNTBEI	EVACTA[2:0]			CNTAEI
Access	R/W	R/W	R/W	R/W	R/W	R/W	R/W	R/W
Reset	0	0	0	0	0	0	0	0

Bits 7:5 – EVACTB[2:0] Event Action B
These bits define what action the counter will take upon certain event conditions.

Value	Name	Description
0x0	NONE	No action
0x1	-	Reserved
0x2	-	Reserved
0x3	UPDOWN	Counts the prescaled clock cycles or counts the matching events according to the setting for event input A. The event signal controls the count direction, up when low and down when high. The direction is latched when the counter counts.
0x4	RESTART_POSEDGE	Restart counter on positive event edge
0x5	RESTART_ANYEDGE	Restart counter on any event edge
0x6	RESTART_HIGHLVL	Restart counter while the event signal is high
Other	-	Reserved

Bit 4 – CNTBEI Enable Counter Event Input B

Value	Description
0	Counter Event input B is disabled
1	Counter Event input B is enabled according to EVACTB bit field

Bits 3:1 – EVACTA[2:0] Event Action A
These bits define what action the counter will take upon certain event conditions.

Value	Name	Description
0x0	CNT_POSEDGE	Count on positive event edge
0x1	CNT_ANYEDGE	Count on any event edge
0x2	CNT_HIGHLVL	Count prescaled clock cycles while the event signal is high
0x3	UPDOWN	Count prescaled clock cycles. The event signal controls the count direction, up when low and down when high. The direction is latched when the counter counts.
Other		Reserved

Bit 0 – CNTAEI Enable Counter Event Input A

Value	Description
0	Counter Event input A is disabled
1	Counter Event input A is enabled according to EVACTA bit field

© 2021 Microchip Technology Inc.
and its subsidiaries

chanhvinh.com

21.5.10 Interrupt Control Register - Normal Mode

Name: INTCTRL
Offset: 0x0A
Reset: 0x00
Property: -

Bit	7	6	5	4	3	2	1	0
		CMP2	CMP1	CMP0				OVF
Access		R/W	R/W	R/W				R/W
Reset		0	0	0				0

Bit 6 – CMP2 Compare Channel 2 Interrupt Enable
See CMP0.

Bit 5 – CMP1 Compare Channel 1 Interrupt Enable
See CMP0.

Bit 4 – CMP0 Compare Channel 0 Interrupt Enable
Writing the CMPn bit to '1' enables the interrupt from Compare Channel n.

Bit 0 – OVF Timer Overflow/Underflow Interrupt Enable
Writing the OVF bit to '1' enables the overflow/underflow interrupt.

chanhvinh.com

21.5.11 Interrupt Flag Register - Normal Mode

Name: INTFLAGS
Offset: 0x0B
Reset: 0x00
Property: -

Bit	7	6	5	4	3	2	1	0
		CMP2	CMP1	CMP0				OVF
Access		R/W	R/W	R/W				R/W
Reset		0	0	0				0

Bit 6 – CMP2 Compare Channel 2 Interrupt Flag
See the CMP0 flag description.

Bit 5 – CMP1 Compare Channel 1 Interrupt Flag
See the CMP0 flag description.

Bit 4 – CMP0 Compare Channel 0 Interrupt Flag
The Compare Interrupt (CMPn) flag is set on a compare match on the corresponding compare channel.
For all modes of operation, the CMPn flag will be set when a compare match occurs between the Count (TCAn.CNT) register and the corresponding Compare n (TCAn.CMPn) register. The CMPn flag is not cleared automatically. It will be cleared only by writing a '1' to its bit location.

Bit 0 – OVF Overflow/Underflow Interrupt Flag
This flag is set either on a TOP (overflow) or BOTTOM (underflow) condition, depending on the WGMODE setting.
The OVF flag is not cleared automatically. It will be cleared only by writing a '1' to its bit location.

chanhvinh.com

21.5.12 Debug Control Register - Normal Mode

Name: DBGCTRL
Offset: 0x0E
Reset: 0x00
Property: -

Bit	7	6	5	4	3	2	1	0
								DBGRUN
Access								R/W
Reset								0

Bit 0 – DBGRUN Run in Debug

Value	Description
0	The peripheral is halted in Break Debug mode and ignores events
1	The peripheral will continue to run in Break Debug mode when the CPU is halted

chanhvinh.com

21.5.13 Temporary Bits for 16-Bit Access

Name: TEMP
Offset: 0x0F
Reset: 0x00
Property: -

The Temporary register is used by the CPU for 16-bit single-cycle access to the 16-bit registers of this peripheral. The register is common for all the 16-bit registers of this peripheral and can be read and written by software. For more details on reading and writing 16-bit registers, refer to *Accessing 16-Bit Registers* in the *Memories* section.

Bit	7	6	5	4	3	2	1	0
	TEMP[7:0]							
Access	R/W	R/W	R/W	R/W	R/W	R/W	R/W	R/W
Reset	0	0	0	0	0	0	0	0

Bits 7:0 – TEMP[7:0] Temporary Bits for 16-bit Access

chanhvinh.com

21.5.14 Counter Register - Normal Mode

Name: CNT
Offset: 0x20
Reset: 0x00
Property: -

The TCAn.CNTL and TCAn.CNTH register pair represents the 16-bit value, TCAn.CNT. The low byte [7:0] (suffix L) is accessible at the original offset. The high byte [15:8] (suffix H) can be accessed at offset + `0x01`.

Bit	15	14	13	12	11	10	9	8
	CNT[15:8]							
Access	R/W	R/W	R/W	R/W	R/W	R/W	R/W	R/W
Reset	0	0	0	0	0	0	0	0

Bit	7	6	5	4	3	2	1	0
	CNT[7:0]							
Access	R/W	R/W	R/W	R/W	R/W	R/W	R/W	R/W
Reset	0	0	0	0	0	0	0	0

Bits 15:8 – CNT[15:8] Counter High Byte
This bit field holds the MSB of the 16-bit Counter register.

Bits 7:0 – CNT[7:0] Counter Low Byte
This bit field holds the LSB of the 16-bit Counter register.

chanhvinh.com

21.5.15 Period Register - Normal Mode

Name: PER
Offset: 0x26
Reset: 0xFFFF
Property: -

The TCAn.PER register contains the 16-bit TOP value in the timer/counter in all modes of operation, except Frequency Waveform Generation (FRQ).

The TCAn.PERL and TCAn.PERH register pair represents the 16-bit value, TCAn.PER. The low byte [7:0] (suffix L) is accessible at the original offset. The high byte [15:8] (suffix H) can be accessed at offset + `0x01`.

Bit	15	14	13	12	11	10	9	8
	PER[15:8]							
Access	R/W	R/W	R/W	R/W	R/W	R/W	R/W	R/W
Reset	1	1	1	1	1	1	1	1

Bit	7	6	5	4	3	2	1	0
	PER[7:0]							
Access	R/W	R/W	R/W	R/W	R/W	R/W	R/W	R/W
Reset	1	1	1	1	1	1	1	1

Bits 15:8 – PER[15:8] Periodic High Byte
This bit field holds the MSB of the 16-bit Period register.

Bits 7:0 – PER[7:0] Periodic Low Byte
This bit field holds the LSB of the 16-bit Period register.

© 2021 Microchip Technology Inc.
and its subsidiaries

chanhvinh.com

21.5.16 Compare n Register - Normal Mode

Name: CMPn
Offset: 0x28 + n*0x02 [n=0..2]
Reset: 0x00
Property: -

This register is continuously compared to the counter value. Normally, the outputs from the comparators are used to generate waveforms.

The TCAn.CMPn registers are updated with the buffer value from their corresponding TCAn.CMPnBUF register when an UPDATE condition occurs.

The TCAn.CMPnL and TCAn.CMPnH register pair represents the 16-bit value, TCAn.CMPn. The low byte [7:0] (suffix L) is accessible at the original offset. The high byte [15:8] (suffix H) can be accessed at offset + `0x01`.

Bit	15	14	13	12	11	10	9	8
	CMP[15:8]							
Access	R/W	R/W	R/W	R/W	R/W	R/W	R/W	R/W
Reset	0	0	0	0	0	0	0	0

Bit	7	6	5	4	3	2	1	0
	CMP[7:0]							
Access	R/W	R/W	R/W	R/W	R/W	R/W	R/W	R/W
Reset	0	0	0	0	0	0	0	0

Bits 15:8 – CMP[15:8] Compare High Byte
This bit field holds the MSB of the 16-bit Compare register.

Bits 7:0 – CMP[7:0] Compare Low Byte
This bit filed holds the LSB of the 16-bit Compare register.

chanhvinh.com

21.5.17 Period Buffer Register

Name: PERBUF
Offset: 0x36
Reset: 0xFFFF
Property: -

This register serves as the buffer for the Period (TCAn.PER) register. Writing to this register from the CPU or UPDI will set the Period Buffer Valid (PERBV) bit in the TCAn.CTRLF register.

The TCAn.PERBUFL and TCAn.PERBUFH register pair represents the 16-bit value, TCAn.PERBUF. The low byte [7:0] (suffix L) is accessible at the original offset. The high byte [15:8] (suffix H) can be accessed at offset + `0x01`.

Bit	15	14	13	12	11	10	9	8
	PERBUF[15:8]							
Access	R/W	R/W	R/W	R/W	R/W	R/W	R/W	R/W
Reset	1	1	1	1	1	1	1	1

Bit	7	6	5	4	3	2	1	0
	PERBUF[7:0]							
Access	R/W	R/W	R/W	R/W	R/W	R/W	R/W	R/W
Reset	1	1	1	1	1	1	1	1

Bits 15:8 – PERBUF[15:8] Period Buffer High Byte
This bit field holds the MSB of the 16-bit Period Buffer register.

Bits 7:0 – PERBUF[7:0] Period Buffer Low Byte
This bit field holds the LSB of the 16-bit Period Buffer register.

© 2021 Microchip Technology Inc.
and its subsidiaries

chanhvinh.com

21.5.18 Compare n Buffer Register

Name: CMPnBUF
Offset: 0x38 + n*0x02 [n=0..2]
Reset: 0x00
Property: -

This register serves as the buffer for the associated Compare n (TCAn.CMPn) register. Writing to this register from the CPU or UPDI will set the Compare Buffer valid (CMPnBV) bit in the TCAn.CTRLF register.

The TCAn.CMPnBUFL and TCAn.CMPnBUFH register pair represents the 16-bit value, TCAn.CMPnBUF. The low byte [7:0] (suffix L) is accessible at the original offset. The high byte [15:8] (suffix H) can be accessed at offset + `0x01`.

Bit	15	14	13	12	11	10	9	8
	CMPBUF[15:8]							
Access	R/W	R/W	R/W	R/W	R/W	R/W	R/W	R/W
Reset	0	0	0	0	0	0	0	0

Bit	7	6	5	4	3	2	1	0
	CMPBUF[7:0]							
Access	R/W	R/W	R/W	R/W	R/W	R/W	R/W	R/W
Reset	0	0	0	0	0	0	0	0

Bits 15:8 – CMPBUF[15:8] Compare High Byte
This bit field holds the MSB of the 16-bit Compare Buffer register.

Bits 7:0 – CMPBUF[7:0] Compare Low Byte
This bit field holds the LSB of the 16-bit Compare Buffer register.

chanhvinh.com

21.6 Register Summary - Split Mode

Offset	Name	Bit Pos.	7	6	5	4	3	2	1	0
0x00	CTRLA	7:0	RUNSTDBY				CLKSEL[2:0]			ENABLE
0x01	CTRLB	7:0		HCMP2EN	HCMP1EN	HCMP0EN		LCMP2EN	LCMP1EN	LCMP0EN
0x02	CTRLC	7:0		HCMP2OV	HCMP1OV	HCMP0OV		LCMP2OV	LCMP1OV	LCMP0OV
0x03	CTRLD	7:0								SPLITM
0x04	CTRLECLR	7:0					CMD[1:0]		CMDEN[1:0]	
0x05	CTRLESET	7:0					CMD[1:0]		CMDEN[1:0]	
0x06 ... 0x09	Reserved									
0x0A	INTCTRL	7:0		LCMP2	LCMP1	LCMP0			HUNF	LUNF
0x0B	INTFLAGS	7:0		LCMP2	LCMP1	LCMP0			HUNF	LUNF
0x0C ... 0x0D	Reserved									
0x0E	DBGCTRL	7:0								DBGRUN
0x0F ... 0x1F	Reserved									
0x20	LCNT	7:0	LCNT[7:0]							
0x21	HCNT	7:0	HCNT[7:0]							
0x22 ... 0x25	Reserved									
0x26	LPER	7:0	LPER[7:0]							
0x27	HPER	7:0	HPER[7:0]							
0x28	LCMP0	7:0	LCMP[7:0]							
0x29	HCMP0	7:0	HCMP[7:0]							
0x2A	LCMP1	7:0	LCMP[7:0]							
0x2B	HCMP1	7:0	HCMP[7:0]							
0x2C	LCMP2	7:0	LCMP[7:0]							
0x2D	HCMP2	7:0	HCMP[7:0]							

21.7 Register Description - Split Mode

chanhvinh.com

chanhvinh.com

21.7.1 Control A - Split Mode

Name: CTRLA
Offset: 0x00
Reset: 0x00
Property: -

Bit	7	6	5	4	3	2	1	0
	RUNSTDBY				CLKSEL[2:0]			ENABLE
Access	R/W				R/W	R/W	R/W	R/W
Reset	0				0	0	0	0

Bit 7 – RUNSTDBY Run Standby
Writing a '1' to this bit will enable the peripheral to run in Standby sleep mode.

Bits 3:1 – CLKSEL[2:0] Clock Select
These bits select the clock frequency for the timer/counter.

Value	Name	Description
0x0	DIV1	$f_{TCA} = f_{CLK_PER}$
0x1	DIV2	$f_{TCA} = f_{CLK_PER}/2$
0x2	DIV4	$f_{TCA} = f_{CLK_PER}/4$
0x3	DIV8	$f_{TCA} = f_{CLK_PER}/8$
0x4	DIV16	$f_{TCA} = f_{CLK_PER}/16$
0x5	DIV64	$f_{TCA} = f_{CLK_PER}/64$
0x6	DIV256	$f_{TCA} = f_{CLK_PER}/256$
0x7	DIV1024	$f_{TCA} = f_{CLK_PER}/1024$

Bit 0 – ENABLE Enable

Value	Description
0	The peripheral is disabled
1	The peripheral is enabled

chanhvinh.com

21.7.2 Control B - Split Mode

Name: CTRLB
Offset: 0x01
Reset: 0x00
Property: -

Bit	7	6	5	4	3	2	1	0
		HCMP2EN	HCMP1EN	HCMP0EN		LCMP2EN	LCMP1EN	LCMP0EN
Access		R/W	R/W	R/W		R/W	R/W	R/W
Reset		0	0	0		0	0	0

Bit 6 – HCMP2EN High byte Compare 2 Enable
See HCMP0EN.

Bit 5 – HCMP1EN High byte Compare 1 Enable
See HCMP0EN.

Bit 4 – HCMP0EN High byte Compare 0 Enable
Setting the HCMPnEN bit in the FRQ or PWM Waveform Generation mode of operation will override the port output register for the corresponding WO[n+3] pin.

Bit 2 – LCMP2EN Low byte Compare 2 Enable
See LCMP0EN.

Bit 1 – LCMP1EN Low byte Compare 1 Enable
See LCMP0EN.

Bit 0 – LCMP0EN Low byte Compare 0 Enable
Setting the LCMPnEN bit in the FRQ or PWM Waveform Generation mode of operation will override the port output register for the corresponding WOn pin.

© 2021 Microchip Technology Inc.
and its subsidiaries

chanhvinh.com

21.7.3 Control C - Split Mode

Name: CTRLC
Offset: 0x02
Reset: 0x00
Property: -

Bit	7	6	5	4	3	2	1	0
		HCMP2OV	HCMP1OV	HCMP0OV		LCMP2OV	LCMP1OV	LCMP0OV
Access		R/W	R/W	R/W		R/W	R/W	R/W
Reset		0	0	0		0	0	0

Bit 6 – HCMP2OV High byte Compare 2 Output Value
See HCMP0OV.

Bit 5 – HCMP1OV High byte Compare 1 Output Value
See HCMP0OV.

Bit 4 – HCMP0OV High byte Compare 0 Output Value
The HCMPnOV bit allows direct access to the output compare value of the waveform generator when the timer/counter is not enabled. This is used to set or clear the WO[n+3] output value when the timer/counter is not running.

Bit 2 – LCMP2OV Low byte Compare 2 Output Value
See LCMP0OV.

Bit 1 – LCMP1OV Low byte Compare 1 Output Value
See LCMP0OV.

Bit 0 – LCMP0OV Low byte Compare 0 Output Value
The LCMPnOV bit allows direct access to the output compare value of the waveform generator when the timer/counter is not enabled. This is used to set or clear the WOn output value when the timer/counter is not running.

Note: When the output is connected to the pad, overriding these bits will not work unless the xCMPnEN bits in the TCAn.CTRLB register have been set. If the output is connected to CCL, the xCMPnEN bits in the TCAn.CTRLB register are bypassed.

© 2021 Microchip Technology Inc.
and its subsidiaries

chanhvinh.com

21.7.4 Control D - Split Mode

Name: CTRLD
Offset: 0x03
Reset: 0x00
Property: -

Bit	7	6	5	4	3	2	1	0
								SPLITM
Access								R/W
Reset								0

Bit 0 – SPLITM Enable Split Mode
This bit sets the timer/counter in Split mode operation and will work as two 8-bit timer/counters. The register map will change compared to the normal 16-bit mode.

chanhvinh.com

21.7.5 Control Register E Clear - Split Mode

Name: CTRLECLR
Offset: 0x04
Reset: 0x00
Property: -

Use this register instead of a Read-Modify-Write (RMW) to clear individual bits by writing a '1' to its bit location.

Bit	7	6	5	4	3	2	1	0
					CMD[1:0]		CMDEN[1:0]	
Access					R/W	R/W	R/W	R/W
Reset					0	0	0	0

Bits 3:2 – CMD[1:0] Command
This bit field is used for software control of restart and reset of the timer/counter. The command bit field is always read as '0'.

Value	Name	Description
0x0	NONE	No command
0x1	-	Reserved
0x2	RESTART	Force restart
0x3	RESET	Force hard Reset (ignored if the timer/counter is enabled)

Bits 1:0 – CMDEN[1:0] Command Enable
This bit field configures what timer/counters the command given by the CMD-bits will be applied to.

Value	Name	Description
0x0	NONE	None
0x1	-	Reserved
0x2	-	Reserved
0x3	BOTH	Command (CMD) will be applied to both low byte and high byte timer/counter

© 2021 Microchip Technology Inc.
and its subsidiaries

chanhvinh.com

21.7.6 Control Register E Set - Split Mode

Name: CTRLESET
Offset: 0x05
Reset: 0x00
Property: -

Use this register instead of a Read-Modify-Write (RMW) to set individual bits by writing a '1' to its bit location.

Bit	7	6	5	4	3	2	1	0
					CMD[1:0]		CMDEN[1:0]	
Access					R/W	R/W	R/W	R/W
Reset					0	0	0	0

Bits 3:2 – CMD[1:0] Command
This bit field is used for software control of restart and reset of the timer/counter. The command bit field is always read as '0'. The CMD bit field must be used together with the Command Enable (CMDEN) bits. Using the RESET command requires that both low byte and high byte timer/counter are selected with CMDEN.

Value	Name	Description
0x0	NONE	No command
0x1	-	Reserved
0x2	RESTART	Force restart
0x3	RESET	Force hard Reset (ignored if the timer/counter is enabled)

Bits 1:0 – CMDEN[1:0] Command Enable
This bit field configures what timer/counters the command given by the CMD-bits will be applied to.

Value	Name	Description
0x0	NONE	None
0x1	-	Reserved
0x2	-	Reserved
0x3	BOTH	Command (CMD) will be applied to both low byte and high byte timer/counter

© 2021 Microchip Technology Inc.
and its subsidiaries

chanhvinh.com

21.7.7 Interrupt Control Register - Split Mode

Name: INTCTRL
Offset: 0x0A
Reset: 0x00
Property: -

Bit	7	6	5	4	3	2	1	0
		LCMP2	LCMP1	LCMP0			HUNF	LUNF
Access		R/W	R/W	R/W			R/W	R/W
Reset		0	0	0			0	0

Bit 6 – LCMP2 Low byte Compare Channel 2 Interrupt Enable
See LCMP0.

Bit 5 – LCMP1 Low byte Compare Channel 1 Interrupt Enable
See LCMP0.

Bit 4 – LCMP0 Low byte Compare Channel 0 Interrupt Enable
Writing the LCMPn bit to '1' enables the low byte Compare Channel n interrupt.

Bit 1 – HUNF High byte Underflow Interrupt Enable
Writing the HUNF bit to '1' enables the high byte underflow interrupt.

Bit 0 – LUNF Low byte Underflow Interrupt Enable
Writing the LUNF bit to '1' enables the low byte underflow interrupt.

chanhvinh.com

21.7.8 Interrupt Flag Register - Split Mode

Name: INTFLAGS
Offset: 0x0B
Reset: 0x00
Property: -

Bit	7	6	5	4	3	2	1	0
		LCMP2	LCMP1	LCMP0			HUNF	LUNF
Access		R/W	R/W	R/W			R/W	R/W
Reset		0	0	0			0	0

Bit 6 – LCMP2 Low byte Compare Channel 2 Interrupt Flag
See LCMP0 flag description.

Bit 5 – LCMP1 Low byte Compare Channel 1 Interrupt Flag
See LCMP0 flag description.

Bit 4 – LCMP0 Low byte Compare Channel 0 Interrupt Flag
The Low byte Compare Interrupt (LCMPn) flag is set on a compare match on the corresponding compare channel in the low byte timer.
For all modes of operation, the LCMPn flag will be set when a compare match occurs between the Low Byte Timer Counter (TCAn.LCNT) register and the corresponding Compare n (TCAn.LCMPn) register. The LCMPn flag will not be cleared automatically and has to be cleared by software. This is done by writing a '1' to its bit location.

Bit 1 – HUNF High byte Underflow Interrupt Flag
This flag is set on a high byte timer BOTTOM (underflow) condition. HUNF is not automatically cleared and needs to be cleared by software. This is done by writing a '1' to its bit location.

Bit 0 – LUNF Low byte Underflow Interrupt Flag
This flag is set on a low byte timer BOTTOM (underflow) condition. LUNF is not automatically cleared and needs to be cleared by software. This is done by writing a '1' to its bit location.

© 2021 Microchip Technology Inc.
and its subsidiaries

chanhvinh.com

21.7.9 Debug Control Register - Split Mode

Name: DBGCTRL
Offset: 0x0E
Reset: 0x00
Property: -

Bit	7	6	5	4	3	2	1	0
								DBGRUN
Access								R/W
Reset								0

Bit 0 – DBGRUN Run in Debug

Value	Description
0	The peripheral is halted in Break Debug mode and ignores events
1	The peripheral will continue to run in Break Debug mode when the CPU is halted

chanhvinh.com

21.7.10 Low Byte Timer Counter Register - Split Mode

Name: LCNT
Offset: 0x20
Reset: 0x00
Property: -

The TCAn.LCNT register contains the counter value for the low byte timer. CPU and UPDI write access has priority over count, clear or reload of the counter.

Bit	7	6	5	4	3	2	1	0
	LCNT[7:0]							
Access	R/W	R/W	R/W	R/W	R/W	R/W	R/W	R/W
Reset	0	0	0	0	0	0	0	0

Bits 7:0 – LCNT[7:0] Counter Value for Low Byte Timer
This bit field defines the counter value of the low byte timer.

chanhvinh.com

21.7.11 High Byte Timer Counter Register - Split Mode

Name: HCNT
Offset: 0x21
Reset: 0x00
Property: -

The TCAn.HCNT register contains the counter value for the high byte timer. CPU and UPDI write access has priority over count, clear or reload of the counter.

Bit	7	6	5	4	3	2	1	0
	HCNT[7:0]							
Access	R/W	R/W	R/W	R/W	R/W	R/W	R/W	R/W
Reset	0	0	0	0	0	0	0	0

Bits 7:0 – HCNT[7:0] Counter Value for High Byte Timer
This bit field defines the counter value in high byte timer.

chanhvinh.com

21.7.12 Low Byte Timer Period Register - Split Mode

Name: LPER
Offset: 0x26
Reset: 0xFF
Property: -

The TCAn.LPER register contains the TOP value for the low byte timer.

Bit	7	6	5	4	3	2	1	0
	LPER[7:0]							
Access	R/W	R/W	R/W	R/W	R/W	R/W	R/W	R/W
Reset	1	1	1	1	1	1	1	1

Bits 7:0 – LPER[7:0] Period Value Low Byte Timer
This bit field holds the TOP value for the low byte timer.

chanhvinh.com

21.7.13 High Byte Period Register - Split Mode

Name: HPER
Offset: 0x27
Reset: 0xFF
Property: -

The TCAn.HPER register contains the TOP value for the high byte timer.

Bit	7	6	5	4	3	2	1	0
	HPER[7:0]							
Access	R/W	R/W	R/W	R/W	R/W	R/W	R/W	R/W
Reset	1	1	1	1	1	1	1	1

Bits 7:0 – HPER[7:0] Period Value High Byte Timer
This bit field holds the TOP value for the high byte timer.

chanhvinh.com

21.7.14 Compare Register n For Low Byte Timer - Split Mode

Name: LCMPn
Offset: 0x28 + n*0x02 [n=0..2]
Reset: 0x00
Property: -

The TCAn.LCMPn register represents the compare value of Compare Channel n for the low byte timer. This register is continuously compared to the counter value of the low byte timer, TCAn.LCNT. Normally, the outputs from the comparators are then used to generate waveforms.

Bit	7	6	5	4	3	2	1	0
	LCMP[7:0]							
Access	R/W	R/W	R/W	R/W	R/W	R/W	R/W	R/W
Reset	0	0	0	0	0	0	0	0

Bits 7:0 – LCMP[7:0] Compare Value of Channel n
This bit field holds the compare value of channel n that is compared to TCAn.LCNT.

chanhvinh.com

21.7.15 High Byte Compare Register n - Split Mode

Name: HCMPn
Offset: 0x29 + n*0x02 [n=0..2]
Reset: 0x00
Property: -

The TCAn.HCMPn register represents the compare value of Compare Channel n for the high byte timer. This register is continuously compared to the counter value of the high byte timer, TCAn.HCNT. Normally, the outputs from the comparators are then used to generate waveforms.

Bit	7	6	5	4	3	2	1	0
	HCMP[7:0]							
Access	R/W	R/W	R/W	R/W	R/W	R/W	R/W	R/W
Reset	0	0	0	0	0	0	0	0

Bits 7:0 – HCMP[7:0] Compare Value of Channel n
This bit field holds the compare value of channel n that is compared to TCAn.HCNT.

chanhvinh.com

22. TCB - 16-Bit Timer/Counter Type B

22.1 Features

- 16-bit Counter Operation Modes:
  - Periodic interrupt
  - Time-out check
  - Input capture
    - On event
    - Frequency measurement
    - Pulse-width measurement
    - Frequency and pulse-width measurement
    - 32-bit capture
  - Single-shot
  - 8-bit Pulse-Width Modulation (PWM)
- Noise Canceler on Event Input
- Synchronize Operation with TCAn

22.2 Overview

The capabilities of the 16-bit Timer/Counter type B (TCB) include frequency and waveform generation and input capture on event with time and frequency measurement of digital signals. The TCB consists of a base counter and control logic that can be set in one of eight different modes, each mode providing unique functionality. The base counter is clocked by the peripheral clock with optional prescaling.

chanhvinh.com

chanhvinh.com

22.2.1 Block Diagram

Figure 22-1. Timer/Counter Type B Block Diagram

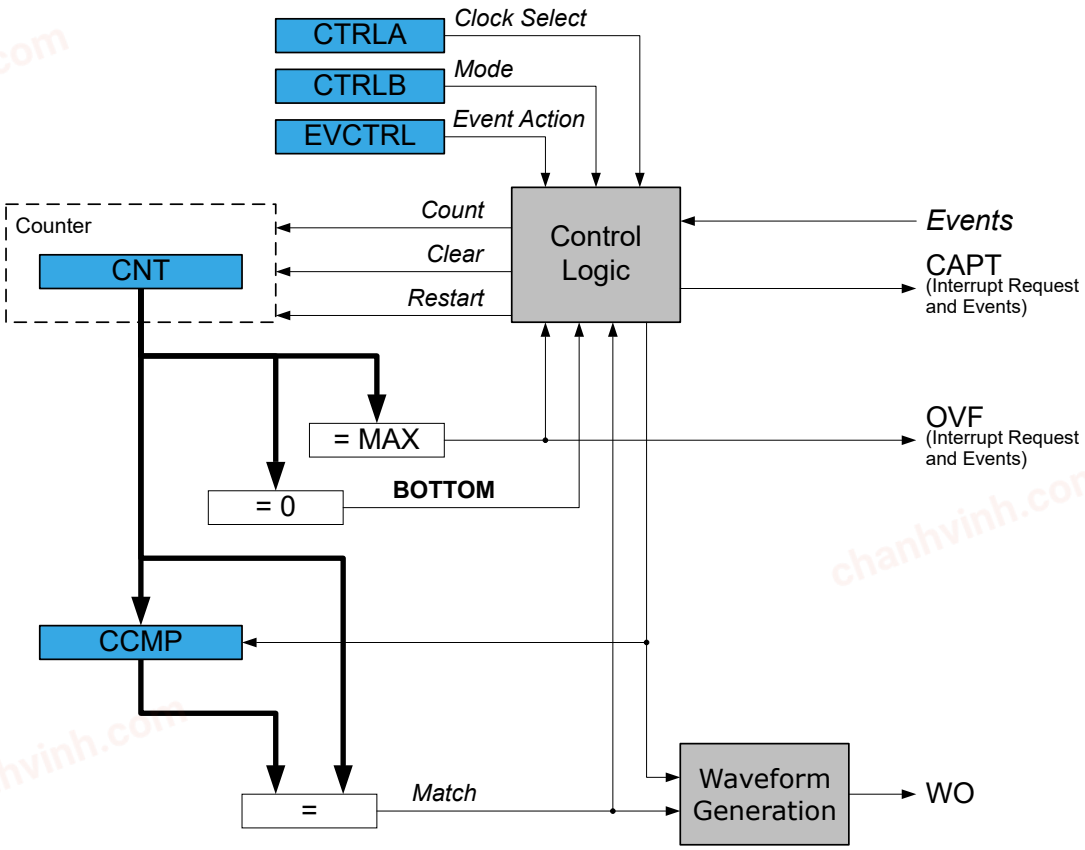

The timer/counter can be clocked from the Peripheral Clock (CLK_PER), from a 16-bit Timer/Counter type A (CLK_TCAn) or the Event System (EVSYS).

Figure 22-2. Timer/Counter Clock Logic

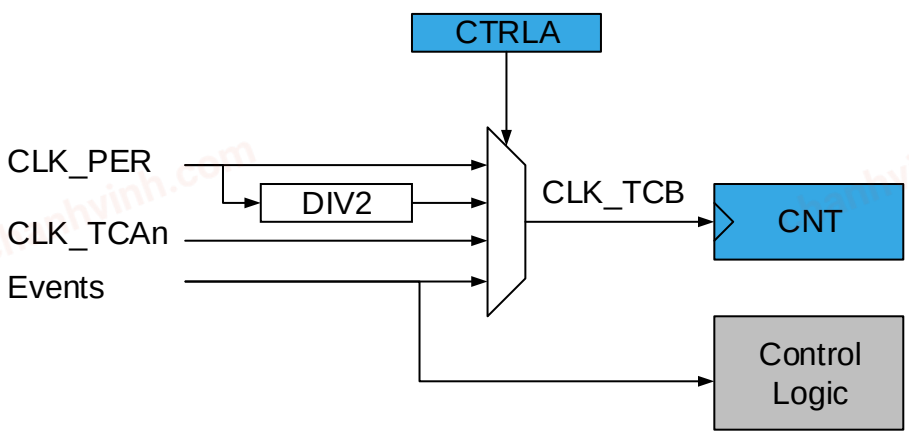

chanhvinh.com

The Clock Select (CLKSEL) bit field in the Control A (TCBn.CTRLA) register selects one of the prescaler outputs directly, or an event channel as the clock (CLK_TCB) input.

Setting the timer/counter to use the clock from a TCAn allows the timer/counter to run in sync with that TCAn.

By using the EVSYS, any event source, such as an external clock signal on any I/O pin, may be used as the counter clock input or as a control logic input. When an event action controlled operation is used, the clock selection must be set to use an event channel as the counter input.

22.2.2 Signal Description

Signal	Description	Type
WO	Digital Asynchronous Output	Waveform Output

22.3 Functional Description

22.3.1 Definitions

The following definitions are used throughout the documentation:

Table 22-1. Timer/Counter Definitions

Name	Description
BOTTOM	The counter reaches BOTTOM when it becomes 0x0000
MAX	The counter reaches the maximum when it becomes 0xFFFF
TOP	The counter reaches TOP when it becomes equal to the highest value in the count sequence
CNT	Count (TCBn.CNT) register value
CCMP	Capture/Compare (TCBn.CCMP) register value

Note: In general, the term ‘timer’ is used when the timer/counter is counting periodic clock ticks. The term ‘counter’ is used when the input signal has sporadic or irregular ticks.

22.3.2 Initialization

By default, the TCB is in Periodic Interrupt mode. Follow these steps to start using it:

1. Write a TOP value to the Compare/Capture (TCBn.CCMP) register.
2. Optional: Write the Compare/Capture Output Enable (CCMPEN) bit in the Control B (TCBn.CTRLB) register to ‘1’. This will make the waveform output available on the corresponding pin, overriding the value in the corresponding PORT output register.
3. Enable the counter by writing a ‘1’ to the ENABLE bit in the Control A (TCBn.CTRLA) register.
   The counter will start counting clock ticks according to the prescaler setting in the Clock Select (CLKSEL) bit field in the Control A (TCBn.CTRLA) register.
4. The counter value can be read from the Count (TCBn.CNT) register. The peripheral will generate a CAPT interrupt and event when the CNT value reaches TOP.
   4.1. If the Compare/Capture register is modified to a value lower than the current CNT, the peripheral will count to MAX and wrap around.
   4.2. At MAX, an OVF interrupt and event will be generated.

22.3.3 Operation

22.3.3.1 Modes

The timer can be configured to run in one of the eight different modes described in the sections below. The event pulse needs to be longer than one system clock cycle to ensure edge detection.

chanhvinh.com

22.3.3.1.1 Periodic Interrupt Mode

In the Periodic Interrupt mode, the counter counts to the capture value and restarts from BOTTOM. A CAPT interrupt and event is generated when the CNT is equal to TOP. If TOP is updated to a value lower than CNT, upon reaching MAX, an OVF interrupt and event is generated, and the counter restarts from BOTTOM.

Figure 22-3. Periodic Interrupt Mode

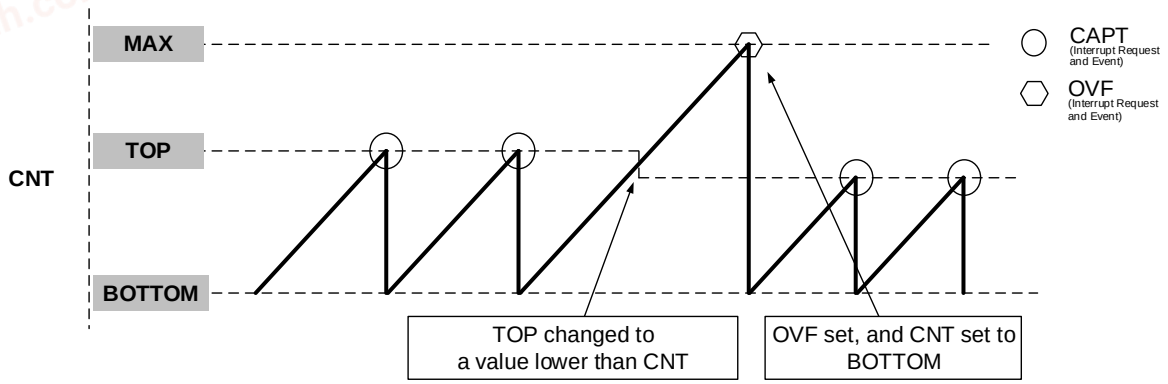

22.3.3.1.2 Time-Out Check Mode

In the Time-Out Check mode, the peripheral starts counting on the first signal edge and stops on the next signal edge detected on the event input channel. CNT remains stationary after the Stop edge (Freeze state). In Freeze state, the counter will restart on a new Start edge.

This mode requires TCB to be configured as an event user and is explained in the Events section.

Start or Stop edge is determined by the Event Edge (EDGE) bit in the Event Control (TCBn.EVCTRL) register. If CNT reaches TOP before the second edge, a CAPT interrupt and event will be generated. If TOP is updated to a value lower than the CNT upon reaching MAX, an OVF interrupt and the simultaneous event is generated, and the counter restarts from BOTTOM. In Freeze state, reading the Count (TCBn.CNT) register or Compare/Capture (TCBn.CCMP) register, or writing the Run (RUN) bit in the Status (TCBn.STATUS) register has no effect.

Figure 22-4. Time-Out Check Mode

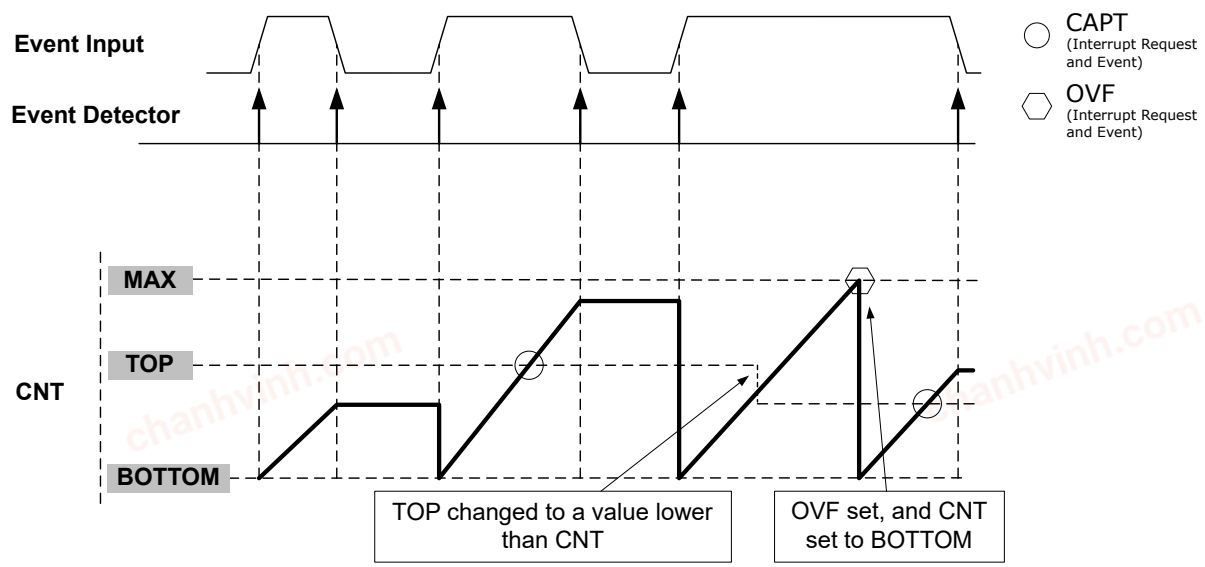

chanhvinh.com

22.3.3.1.3 Input Capture on Event Mode

In the Input Capture on Event mode, the counter will count from BOTTOM to MAX continuously. When an event is detected the Count (TCBn.CNT) register value is transferred to the Compare/Capture (TCBn.CCMP) register and a CAPT interrupt and event is generated. The Event edge detector that can be configured to trigger a capture on either rising or falling edges.

This mode requires TCB to be configured as an event user and is explained in the Events section.

The figure below shows the input capture unit configured to capture on the falling edge of the event input signal. The CAPT Interrupt flag is automatically cleared after the low byte of the Compare/Capture (TCBn.CCMP) register has been read. An OVF interrupt and event is generated when the CNT is MAX.

Figure 22-5. Input Capture on Event

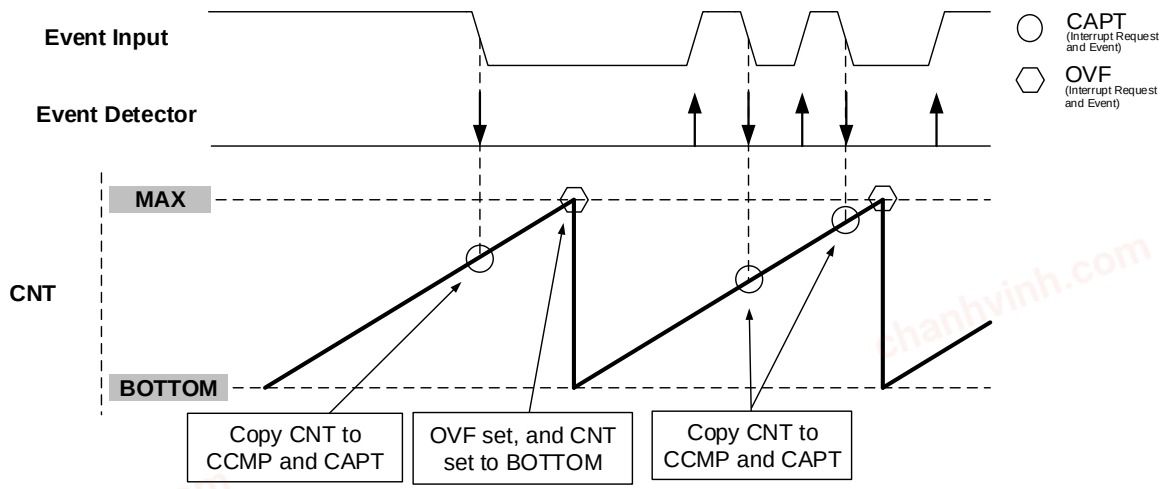

Important: It is recommended to write 0x0000 to the Count (TCBn.CNT) register when entering this mode from any other mode.

22.3.3.1.4 Input Capture Frequency Measurement Mode

In the Input Capture Frequency Measurement mode, the TCB captures the counter value and restarts on either a positive or negative edge of the event input signal.

The CAPT Interrupt flag is automatically cleared after the low byte of the Compare/Capture (TCBn.CCMP) register has been read. An OVF interrupt and event is generated when the CNT value is MAX.

This mode requires TCB to be configured as an event user and is explained in the Events section.

The figure below illustrates this mode when configured to act on a rising edge.

chanhvinh.com

Figure 22-6. Input Capture Frequency Measurement

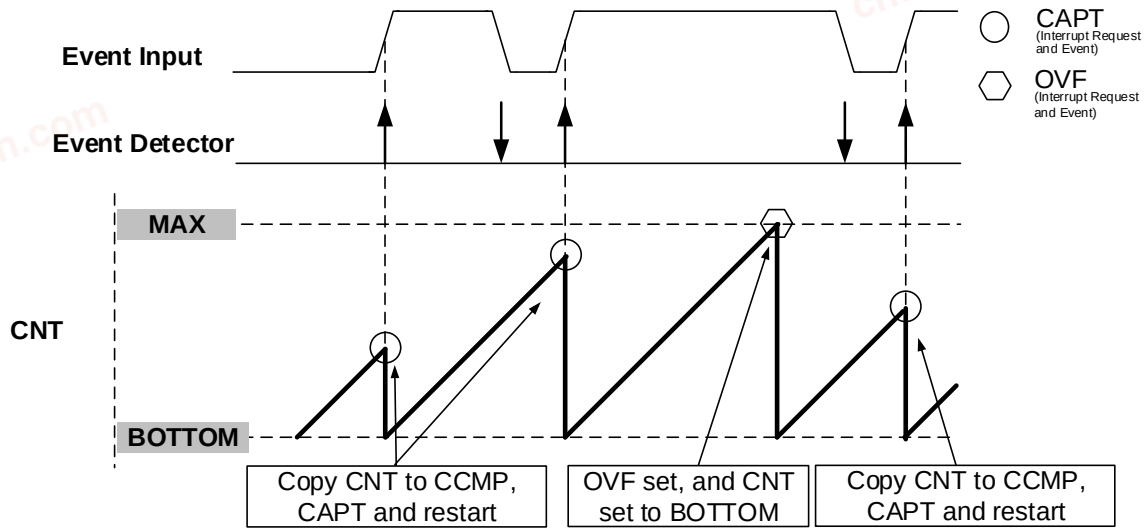

22.3.3.1.5 Input Capture Pulse-Width Measurement Mode

In the Input Capture Pulse-Width Measurement mode, the input capture pulse-width measurement will restart the counter on a positive edge, and capture on the next falling edge before an interrupt request is generated. The CAPT Interrupt flag is automatically cleared after the low byte of the Compare/Capture (TCBn.CCMP) register has been read. An OVF interrupt and event is generated when the CNT is MAX. The timer will automatically switch between rising and falling edge detection, but a minimum edge separation of two clock cycles is required for correct behavior.

This mode requires TCB to be configured as an event user and is explained in the Events section.

Figure 22-7. Input Capture Pulse-Width Measurement

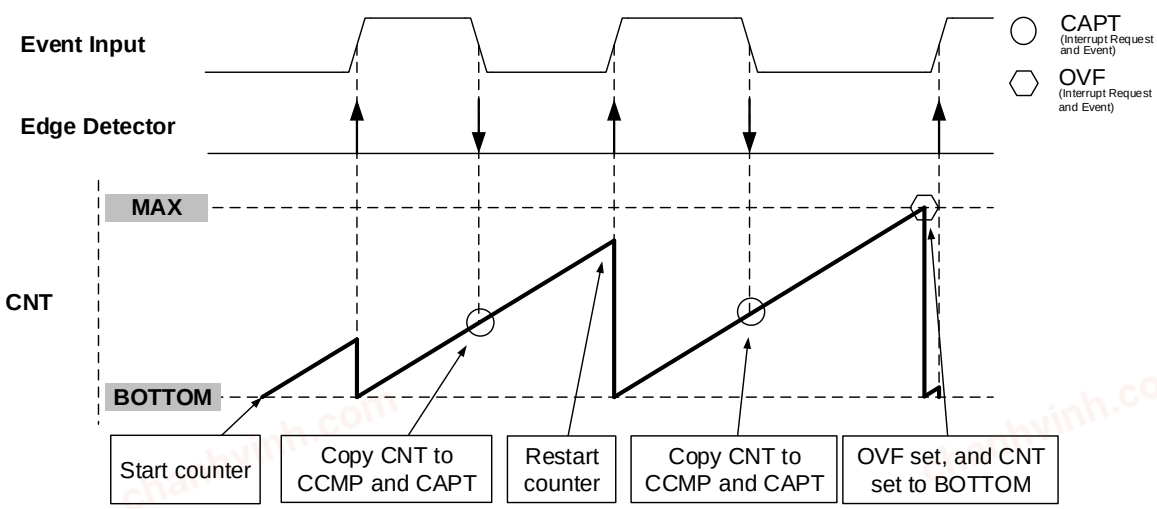

22.3.3.1.6 Input Capture Frequency and Pulse-Width Measurement Mode

In the Input Capture Frequency and Pulse-Width Measurement mode, the timer will start counting when a positive edge is detected on the event input signal. The count value is captured on the following falling edge. The counter stops when the second rising edge of the event input signal is detected. This will set the CAPT interrupt flag.

This mode requires TCB to be configured as an event user and is explained in the Events section.

© 2021 Microchip Technology Inc.
and its subsidiaries

chanhvinh.com

The CAPT Interrupt flag is automatically cleared after the low byte of the Compare/Capture (TCBn.CCMP) register has been read, and the timer/counter is ready for a new capture sequence. Therefore, the Count (TCBn.CNT) register must be read before the Compare/Capture (TCBn.CCMP) register, since it is reset to BOTTOM at the next positive edge of the event input signal. An OVF interrupt and event is generated when the CNT value is MAX.

Figure 22-8. Input Capture Frequency and Pulse-Width Measurement

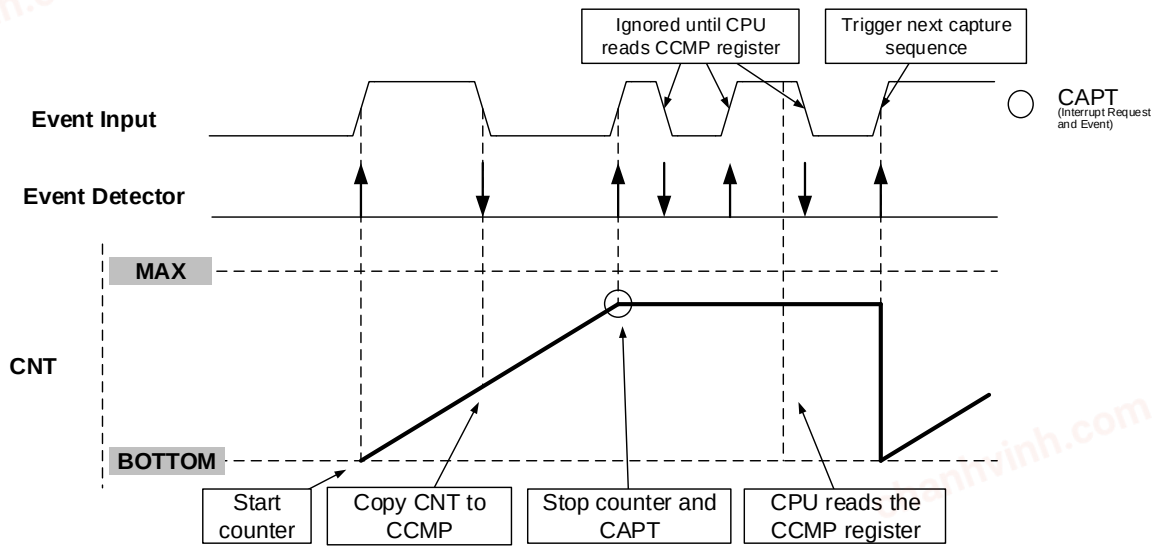

22.3.3.1.7 Single-Shot Mode

The Single-Shot mode can be used to generate a pulse with a duration defined by the Compare (TCBn.CCMP) register, every time a rising or falling edge is observed on a connected event channel.

This mode requires TCB to be configured as an event user and is explained in the Events section.

When the counter is stopped, the output pin is set low. If an event is detected on the connected event channel, the timer will reset and start counting from BOTTOM to TOP while driving its output high. The RUN bit in the Status (TCBn.STATUS) register can be read to see if the counter is counting or not. When CNT reaches the CCMP register value, the counter will stop, and the output pin will go low for at least one counter clock cycle (TCB_CLK), and a new event arriving during this time will be ignored. After this, there is a delay of two peripheral clock cycles (PER_CLK) from when a new event is received until the output is set high.When the EDGE bit of the TCB.EVCTRL register is written to '1', any edge can trigger the start of counter. If the EDGE bit is '0', only positive edges will trigger the start.

The counter will start counting as soon as the peripheral is enabled, even without triggering by an event, or if the Event Edge (EDGE) bit in the Event Control (TCBn.EVCTRL) register is modified while the peripheral is enabled. This is prevented by writing TOP to the Counter register. Similar behavior is seen if the Event Edge (EDGE) bit in the Event Control (TCBn.EVCTRL) register is '1' while the module is enabled. Writing TOP to the Counter register prevents this as well.

If the Event Asynchronous (ASYNC) bit in the Control B (TCBn.CTRLB) register is written to '1', the timer will react asynchronously to an incoming event. An edge on the event will immediately cause the output signal to be set. The counter will still start counting two clock cycles after the event is received.

© 2021 Microchip Technology Inc.
and its subsidiaries

chanhvinh.com

Figure 22-9. Single-Shot Mode

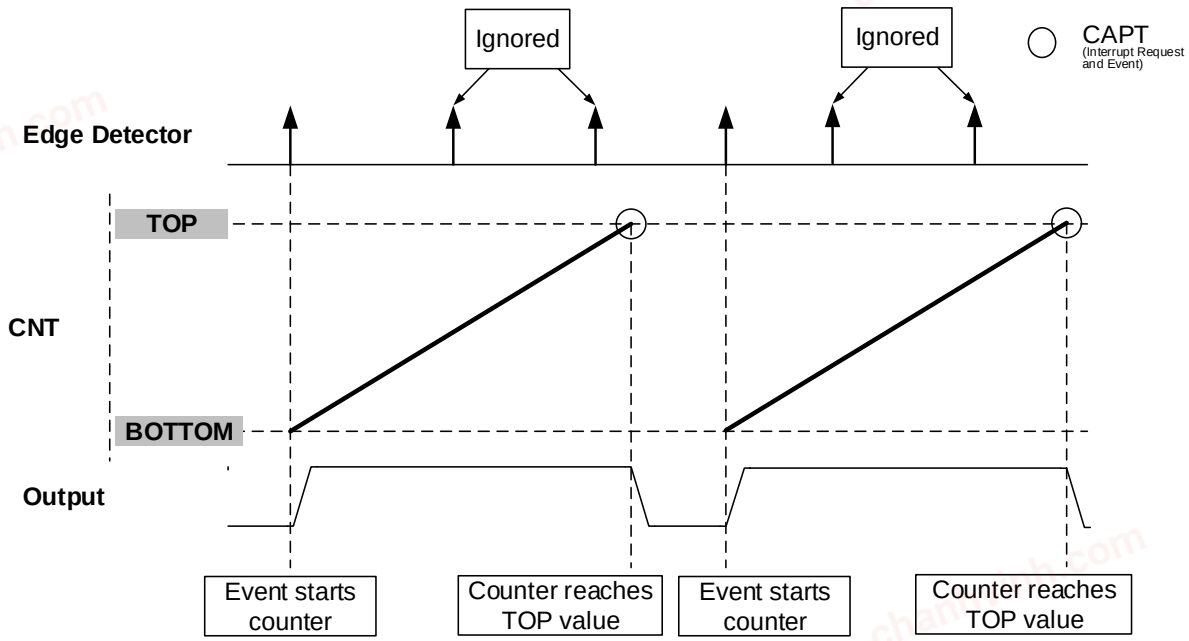

22.3.3.1.8 8-Bit PWM Mode

The TCB can be configured to run in 8-bit PWM mode, where each of the register pairs in the 16-bit Compare/ Capture (TCBn.CCMPH and TCBn.CCMPL) register are used as individual Compare registers. The period (T) is controlled by CCMPL, while CCMPH controls the duty cycle of the waveform. The counter will continuously count from BOTTOM to CCMPL, and the output will be set at BOTTOM and cleared when the counter reaches CCMPH.

CCMPH is the number of cycles for which the output will be driven high. CCMPL+1 is the period of the output pulse.

Figure 22-10. 8-Bit PWM Mode

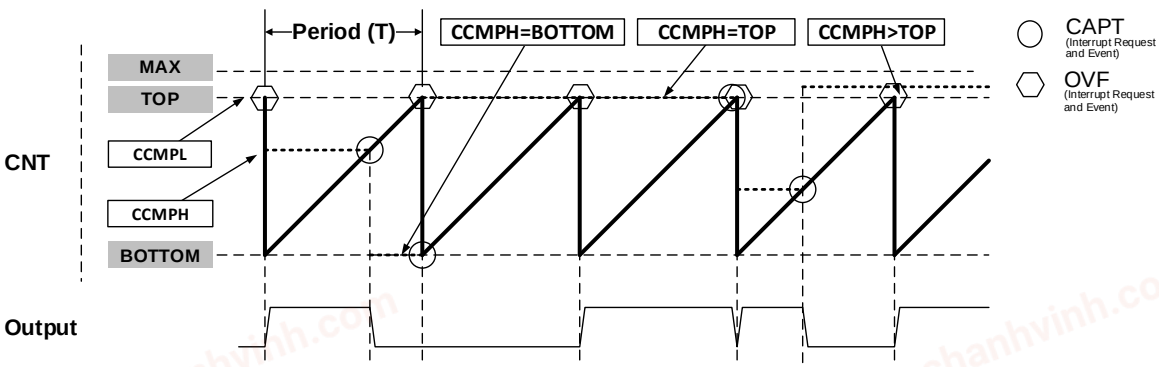

22.3.3.2 Output

Timer synchronization and output logic level are dependent on the selected Timer Mode (CNTMODE) bit field in Control B (TCBn.CTRLB) register. In Single-Shot mode, the timer/counter can be configured so that the signal generation happens asynchronously to an incoming event (ASYNC = 1 in TCBn.CTRLB). The output signal is then set immediately at the incoming event instead of being synchronized to the TCB clock. Even though the output is set immediately, it will take two to three CLK_TCB cycles before the counter starts counting.

chanhvinh.com

Writing the Compare/Capture Output Enable (CCMPEN) bit in TCBn.CTRLB to '1' enables the waveform output. This will make the waveform output available on the corresponding pin, overriding the value in the corresponding PORT output register.

The different configurations and their impact on the output are listed in the table below.

Table 22-2. Output Configuration

CCMPEN	CNTMODE	ASYNC	Output
1	Single-Shot mode	0	The output is high when the counter starts, and the output is low when the counter stops
		1	The output is high when the event arrives, and the output is low when the counter stops
	8-bit PWM mode	Not applicable	8-bit PWM mode
	Other modes	Not applicable	The Compare/Capture Pin Initial Value bit (CCMPINIT) in the Control B (TCBn.CTRLB) register selects the initial output level
0	Not applicable	Not applicable	No output

It is not recommended to change modes while the peripheral is enabled, as this can produce an unpredictable output. There is a possibility that an interrupt flag is set during the timer configuration. It is recommended to clear the Timer/Counter Interrupt Flags (TCBn.INTFLAGS) register after configuring the peripheral.

22.3.3.3 32-Bit Input Capture

Two 16-bit Timer/Counter Type B (TCBn) can be combined to work as a true 32-bit input capture:

One TCB is counting the two LSBs. Once this counter reaches MAX, an overflow (OVF) event is generated, and the counter wraps around. The second TCB is configured to count these OVF events and thus provides the two MSBs. The 32-bit counter value is concatenated from the two counter values.

To function as a 32-bit counter, the two TCBs and the system have to be set up as described in the following paragraphs.

System Configuration

- Configure a source (TCA, events, CLK_PER) for the count input for the LSB TCB, according to the application requirements
- Configure the event system to route the OVF events from the LSB TCB (event generator) to the MSB TCB (event user)
- Configure the event system to route the same capture event (CAPT) generator to both TCBs

Configuration of the LSB Counter

- Select the configured count input by writing the Clock Select (CLKSEL) bit field in the Control A (CTRLA) register
- Write the Timer Mode (CNTMODE) bit field in the Control B (CTRLB) register to select one of the Input Capture modes
- The Cascade Two Timer/Counters (CASCADE) bit in CTRLA must be '0'

Configuration of the MSB Counter

- Enable the 32-bit mode by writing the Cascade Two Timer/Counters bit (CASCADE) in CTRLA to '1'
- Select events as clock input by writing to the Clock Select (CLKSEL) bit field in the Control A (CTRLA) register
- Write the Timer Mode (CNTMODE) bit field in the Control B (CTRLB) register to select the same Input Capture mode as the LSB TCB

© 2021 Microchip Technology Inc. and its subsidiaries

chanhvinh.com

Capturing a 32-Bit Counter Value

To acquire a 32-bit counter value, send a CAPT event to both TCBs. Both TCBs are running in the same capture mode, so each will capture the current counter value (CNT) in the respective Capture/Compare (CCMP) register. The 32-bit capture value is formed by concatenating the two CCMP registers.

Example 22-1. Using TCB0 as LSB Counter and TCB1 as MSB Counter

TCB0 is counting the count input, and TCB1 is counting the OVF signals from TCB0. Both TCBs are in Input Capture on Event mode.

A CAPT event is generated and causes both TCB0 and TCB1 to copy their current CNT values to their respective CCMP registers. The two different CASCADE bit values allow a correct timing of the CAPT event.

The captured 32-bit value is concatenated from TCB1.CCMP (MSB) and TCB0.CCMP (LSB).

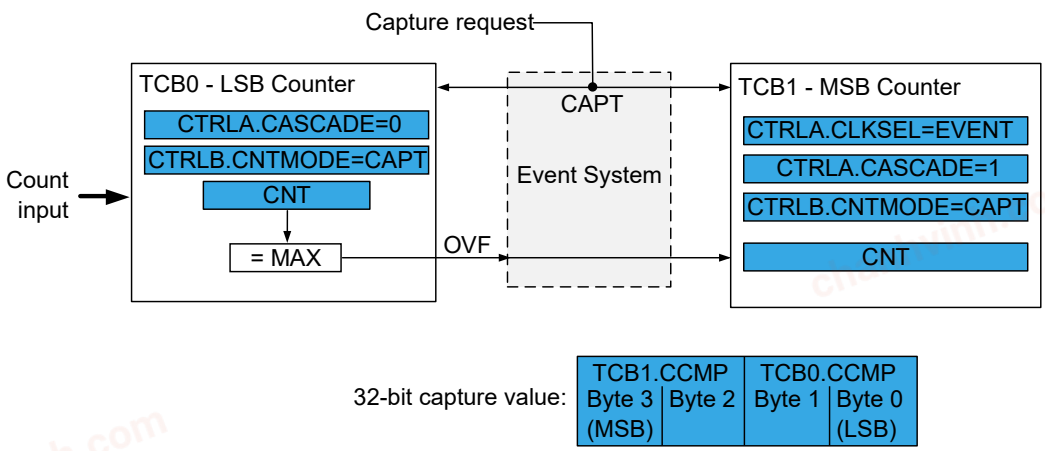

22.3.3.4 Noise Canceler

The Noise Canceler improves the noise immunity by using a simple digital filter scheme. When the Noise Filter (FILTER) bit in the Event Control (TCBn.EVCTRL) register is enabled, the peripheral monitors the event channel and keeps a record of the last four observed samples. If four consecutive samples are equal, the input is considered to be stable, and the signal is fed to the edge detector.

When enabled, the Noise Canceler introduces an additional delay of four peripheral clock cycles between a change applied to the input and the update of the Input Compare register.

The Noise Canceler uses the peripheral clock and is, therefore, not affected by the prescaler.

22.3.3.5 Synchronized with Timer/Counter Type A

The TCB can be configured to use the clock (CLK_TCA) of a Timer/Counter type A (TCAn) by writing to the Clock Select bit field (CLKSEL) in the Control A register (TCBn.CTRLA). In this setting, the TCB will count on the same clock source as selected in TCAn.

When the Synchronize Update (SYNCUPD) bit in the Control A (TCBn.CTRLA) register is written to '1', the TCB counter will restart when the TCAn counter restarts.

22.3.4 Events

The TCB can generate the events described in the following table:

chanhvinh.com

Table 22-3. Event Generators in TCB

Generator Name		Description	Event Type	Generating Clock Domain	Length of Event
Peripheral	Event				
TCBn	CAPT	CAPT flag set	Pulse	CLK_PER	One CLK_PER period
	OVF	OVF flag set			

The conditions for generating the CAPT and OVF events are identical to those that will raise the corresponding interrupt flags in the Timer/Counter Interrupt Flags (TCBn.INTFLAGS) register. Refer to the *Event System* section for more details regarding event users and Event System configuration.

The TCB can receive the events described in the following table:

Table 22-4. Event Users and Available Event Actions in TCB

User Name		Description	Input Detection	Async/Sync
Peripheral	Input			
TCBn	CAPT	Time-Out Check Count mode	Edge	Sync
		Input Capture on Event Count mode		
		Input Capture Frequency Measurement Count mode		
		Input Capture Pulse-Width Measurement Count mode		
		Input Capture Frequency and Pulse-Width Measurement Count mode		
		Single-Shot Count mode		Both
	COUNT	Event as clock source in combination with a count mode		Sync

CAPT and COUNT are TCB event users that detect and act upon input events.

The COUNT event user is enabled on the peripheral by modifying the Clock Select (CLKSEL) bit field in the Control A (TCBn.CTRLA) register to EVENT and setting up the Event System accordingly.

If the Capture Event Input Enable (CAPTEI) bit in the Event Control (TCBn.EVCTRL) register is written to '1', incoming events will result in an event action as defined by the Event Edge (EDGE) bit in Event Control (TCBn.EVCTRL) register and the Timer Mode (CNTMODE) bit field in Control B (TCBn.CTRLB) register. The event needs to last for at least one CLK_PER cycle to be recognized.

If the Asynchronous mode is enabled for Single-Shot mode, the event is edge-triggered and will capture changes on the event input shorter than one peripheral clock cycle.

22.3.5 Interrupts

Table 22-5. Available Interrupt Vectors and Sources

Name	Vector Description	Conditions
CAPT	TCB interrupt	Depending on the operating mode. See the description of the CAPT bit in the TCBn.INTFLAG register.
OVF		The timer/counter overflows from MAX to BOTTOM.

When an interrupt condition occurs, the corresponding interrupt flag is set in the peripheral's Interrupt Flags (*peripheral*.INTFLAGS) register.

An interrupt source is enabled or disabled by writing to the corresponding enable bit in the peripheral's Interrupt Control (*peripheral*.INTCTRL) register.

© 2021 Microchip Technology Inc. and its subsidiaries

chanhvinh.com

An interrupt request is generated when the corresponding interrupt source is enabled, and the interrupt flag is set. The interrupt request remains active until the interrupt flag is cleared. See the peripheral's INTFLAGS register for details on how to clear interrupt flags.

22.3.6 Sleep Mode Operation

TCBn is, by default, disabled in Standby sleep mode. It will be halted as soon as the sleep mode is entered.

The module can stay fully operational in the Standby sleep mode if the Run Standby (RUNSTDBY) bit in the TCBn.CTRLA register is written to '1'.

All operations are halted in Power-Down sleep mode.

chanhvinh.com

22.4 Register Summary

Offset	Name	Bit Pos.	7	6	5	4	3	2	1	0
0x00	CTRLA	7:0		RUNSTDBY	CASCADE	SYNCUPD	CLKSEL[2:0]			ENABLE
0x01	CTRLB	7:0		ASYNC	CCMPINIT	CCMPEN		CNTMODE[2:0]		
0x02 ... 0x03	Reserved									
0x04	EVCTRL	7:0		FILTER		EDGE				CAPTEI
0x05	INTCTRL	7:0							OVF	CAPT
0x06	INTFLAGS	7:0							OVF	CAPT
0x07	STATUS	7:0								RUN
0x08	DBGCTRL	7:0								DBGRUN
0x09	TEMP	7:0	TEMP[7:0]							
0x0A	CNT	7:0	CNT[7:0]							
		15:8	CNT[15:8]							
0x0C	CCMP	7:0	CCMP[7:0]							
		15:8	CCMP[15:8]							

22.5 Register Description

© 2021 Microchip Technology Inc.
and its subsidiaries

chanhvinh.com

22.5.1 Control A

Name: CTRLA
Offset: 0x00
Reset: 0x00
Property: -

Bit	7	6	5	4	3	2	1	0
		RUNSTDBY	CASCADE	SYNCUPD	CLKSEL[2:0]			ENABLE
Access		R/W	R/W	R/W	R/W	R/W	R/W	R/W
Reset		0	0	0	0	0	0	0

Bit 6 – RUNSTDBY Run Standby
Writing a '1' to this bit will enable the peripheral to run in Standby sleep mode.

Bit 5 – CASCADE Cascade Two Timer/Counters
Writing this bit to '1' enables cascading of two 16-bit Timer/Counters type B (TCBn) for 32-bit operation using the Event System. This bit must be '1' for the timer/counter used for the two Most Significant Bytes (MSB). When this bit is '1', the selected event source for capture (CAPT) is delayed by one peripheral clock cycle. This compensates the carry propagation delay when cascading two counters via the Event System.

Bit 4 – SYNCUPD Synchronize Update
When this bit is written to '1', the TCB will restart whenever TCAn is restarted or overflows. This can be used to synchronize capture with the PWM period. If TCAn is selected as the clock source, the TCB will restart when that TCAn is restarted. For other clock selections, it will restart together with TCA0.

Bits 3:1 – CLKSEL[2:0] Clock Select
Writing these bits selects the clock source for this peripheral.

Value	Name	Description
0x0	DIV1	CLK_PER
0x1	DIV2	CLK_PER / 2
0x2	TCA0	CLK_TCA from TCA0
0x3	TCA1	CLK_TCA from TCA1
0x4	-	Reserved
0x5	-	Reserved
0x6	-	Reserved
0x07	EVENT	Positive edge on event input

Bit 0 – ENABLE Enable
Writing this bit to '1' enables the Timer/Counter type B peripheral.

© 2021 Microchip Technology Inc.
and its subsidiaries

chanhvinh.com

22.5.2 Control B

Name: CTRLB
Offset: 0x01
Reset: 0x00
Property: -

Bit	7	6	5	4	3	2	1	0
		ASYNC	CCMPINIT	CCMPEN		CNTMODE[2:0]		
Access		R/W	R/W	R/W		R/W	R/W	R/W
Reset		0	0	0		0	0	0

Bit 6 – ASYNC Asynchronous Enable
Writing this bit to '1' will allow asynchronous updates of the TCB output signal in Single-Shot mode.

Value	Description
0	The output will go HIGH when the counter starts after synchronization
1	The output will go HIGH when an event arrives

Bit 5 – CCMPINIT Compare/Capture Pin Initial Value
This bit is used to set the initial output value of the pin when a pin output is used. This bit has no effect in 8-bit PWM mode and Single-Shot mode.

Value	Description
0	Initial pin state is LOW
1	Initial pin state is HIGH

Bit 4 – CCMPEN Compare/Capture Output Enable
Writing this bit to '1' enables the waveform output. This will make the waveform output available on the corresponding pin, overriding the value in the corresponding PORT output register. The corresponding pin direction must be configured as an output in the PORT peripheral.

Value	Description
0	Waveform output is not enabled on the corresponding pin
1	Waveform output will override the output value of the corresponding pin

Bits 2:0 – CNTMODE[2:0] Timer Mode
Writing to this bit field selects the Timer mode.

Value	Name	Description
0x0	INT	Periodic Interrupt mode
0x1	TIMEOUT	Time-out Check mode
0x2	CAPT	Input Capture on Event mode
0x3	FRQ	Input Capture Frequency Measurement mode
0x4	PW	Input Capture Pulse-Width Measurement mode
0x5	FRQPW	Input Capture Frequency and Pulse-Width Measurement mode
0x6	SINGLE	Single-Shot mode
0x7	PWM8	8-Bit PWM mode

© 2021 Microchip Technology Inc. and its subsidiaries

chanhvinh.com

22.5.3 Event Control

Name: EVCTRL
Offset: 0x04
Reset: 0x00
Property: -

Bit	7	6	5	4	3	2	1	0
		FILTER		EDGE				CAPTEI
Access		R/W		R/W				R/W
Reset		0		0				0

Bit 6 – FILTER Input Capture Noise Cancellation Filter
Writing this bit to '1' enables the Input Capture Noise Cancellation unit.

Bit 4 – EDGE Event Edge
This bit is used to select the event edge. The effect of this bit is dependent on the selected Count Mode (CNTMODE) bit field in TCBn.CTRLB. "—" means that an event or edge has no effect in this mode.

Count Mode	EDGE	Positive Edge	Negative Edge
Periodic Interrupt mode	0	—	—
	1	—	—
Timeout Check mode	0	Start counter	Stop counter
	1	Stop counter	Start counter
Input Capture on Event mode	0	Input Capture, interrupt	—
	1	—	Input Capture, interrupt
Input Capture Frequency Measurement mode	0	Input Capture, clear and restart counter, interrupt	—
	1	—	Input Capture, clear and restart counter, interrupt
Input Capture Pulse-Width Measurement mode	0	Clear and restart counter	Input Capture, interrupt
	1	Input Capture, interrupt	Clear and restart counter
Input Capture Frequency and Pulse Width Measurement mode	0	• On the 1st Positive: Clear and restart counter • On the following Negative: Input Capture • On the 2nd Positive: Stop counter, interrupt	
	1	• On the 1st Negative: Clear and restart counter • On the following Positive: Input Capture • On the 2nd Negative: Stop counter, interrupt	
Single-Shot mode	0	Start counter	—
	1	Start counter	Start counter
8-Bit PWM mode	0	—	—
	1	—	—

Bit 0 – CAPTEI Capture Event Input Enable
Writing this bit to '1' enables the input capture event.

chanhvinh.com

22.5.4 Interrupt Control

Name: INTCTRL
Offset: 0x05
Reset: 0x00
Property: -

Bit	7	6	5	4	3	2	1	0
							OVF	CAPT
Access							R/W	R/W
Reset							0	0

Bit 1 – OVF Overflow Interrupt Enable
Writing this bit to '1' enables interrupt on overflow.

Bit 0 – CAPT Capture Interrupt Enable
Writing this bit to '1' enables interrupt on capture.

chanhvinh.com

22.5.5 Interrupt Flags

Name: INTFLAGS
Offset: 0x06
Reset: 0x00
Property: -

Bit	7	6	5	4	3	2	1	0
							OVF	CAPT
Access							R/W	R/W
Reset							0	0

Bit 1 – OVF Overflow Interrupt Flag
This bit is set when an overflow interrupt occurs. The flag is set whenever the timer/counter wraps from MAX to BOTTOM.
The bit is cleared by writing a '1' to the bit position.

Bit 0 – CAPT Capture Interrupt Flag
This bit is set when a capture interrupt occurs. The interrupt conditions are dependent on the Counter Mode (CNTMODE) bit field in the Control B (TCBn.CTRLB) register.
This bit is cleared by writing a '1' to it or when the Capture register is read in Capture mode.

Table 22-6. Interrupt Sources Set Conditions by Counter Mode

Counter Mode	Interrupt Set Condition	TOP Value	CAPT
Periodic Interrupt mode	Set when the counter reaches TOP	CCMP	CNT == TOP
Timeout Check mode	Set when the counter reaches TOP		
Single-Shot mode	Set when the counter reaches TOP		
Input Capture Frequency Measurement mode	Set on edge when the Capture register is loaded and the counter restarts; the flag clears when the capture is read	--	On Event, copy CNT to CCMP, and restart counting (CNT == BOTTOM)
Input Capture on Event mode	Set when an event occurs and the Capture register is loaded; the flag clears when the capture is read		On Event, copy CNT to CCMP, and continue counting
Input Capture Pulse-Width Measurement mode	Set on edge when the Capture register is loaded; the previous edge initialized the count; the flag clears when the capture is read		
Input Capture Frequency and Pulse-Width Measurement mode	Set on the second edge (positive or negative) when the counter is stopped; the flag clears when the capture is read		
8-Bit PWM mode	Set when the counter reaches CCMH	CCML	CNT == CCMH

© 2021 Microchip Technology Inc. and its subsidiaries

chanhvinh.com

22.5.6 Status

Name: STATUS
Offset: 0x07
Reset: 0x00
Property: -

Bit	7	6	5	4	3	2	1	0
								RUN
Access								R
Reset								0

Bit 0 – RUN Run
When the counter is running, this bit is set to '1'. When the counter is stopped, this bit is cleared to '0'.
The bit is read-only and cannot be set by UPDI.

chanhvinh.com

22.5.7 Debug Control

Name: DBGCTRL
Offset: 0x08
Reset: 0x00
Property: -

Bit	7	6	5	4	3	2	1	0
								DBGRUN
Access								R/W
Reset								0

Bit 0 – DBGRUN Debug Run

Value	Description
0	The peripheral is halted in Break Debug mode and ignores events
1	The peripheral will continue to run in Break Debug mode when the CPU is halted

chanhvinh.com

22.5.8 Temporary Value

Name: TEMP
Offset: 0x09
Reset: 0x00
Property: -

The Temporary register is used by the CPU for 16-bit single-cycle access to the 16-bit registers of this peripheral. The register is common for all the 16-bit registers of this peripheral and can be read and written by software. For more details on reading and writing 16-bit registers, refer to *Accessing 16-Bit Registers* in the *Memories* section.

Bit	7	6	5	4	3	2	1	0
	TEMP[7:0]							
Access	R/W	R/W	R/W	R/W	R/W	R/W	R/W	R/W
Reset	0	0	0	0	0	0	0	0

Bits 7:0 – TEMP[7:0] Temporary Value

chanhvinh.com

22.5.9 Count

Name: CNT
Offset: 0x0A
Reset: 0x00
Property: -

The TCBn.CNTL and TCBn.CNTH register pair represents the 16-bit value TCBn.CNT. The low byte [7:0] (suffix L) is accessible at the original offset. The high byte [15:8] (suffix H) can be accessed at offset + `0x01`.

CPU and UPDI write access has priority over internal updates of the register.

Bit	15	14	13	12	11	10	9	8
	CNT[15:8]							
Access	R/W	R/W	R/W	R/W	R/W	R/W	R/W	R/W
Reset	0	0	0	0	0	0	0	0

Bit	7	6	5	4	3	2	1	0
	CNT[7:0]							
Access	R/W	R/W	R/W	R/W	R/W	R/W	R/W	R/W
Reset	0	0	0	0	0	0	0	0

Bits 15:8 – CNT[15:8] Count Value High
These bits hold the MSB of the 16-bit Counter register.

Bits 7:0 – CNT[7:0] Count Value Low
These bits hold the LSB of the 16-bit Counter register.

chanhvinh.com

22.5.10 Capture/Compare

Name: CCMP
Offset: 0x0C
Reset: 0x00
Property: -

The TCBn.CCMPL and TCBn.CCMPH register pair represents the 16-bit value TCBn.CCMP. The low byte [7:0] (suffix L) is accessible at the original offset. The high byte [15:8] (suffix H) can be accessed at offset + `0x01`.

This register has different functions depending on the mode of operation:

- For Capture operation, these registers contain the captured value of the counter at the time the capture occurs
- In Periodic Interrupt/Time-Out and Single-Shot mode, this register acts as the TOP value
- In 8-bit PWM mode, TCBn.CCMPL and TCBn.CCMPH act as two independent registers: The period of the waveform is controlled by CCMPL, while CCMPH controls the duty cycle.

Bit	15	14	13	12	11	10	9	8
	CCMP[15:8]							
Access	R/W	R/W	R/W	R/W	R/W	R/W	R/W	R/W
Reset	0	0	0	0	0	0	0	0

Bit	7	6	5	4	3	2	1	0
	CCMP[7:0]							
Access	R/W	R/W	R/W	R/W	R/W	R/W	R/W	R/W
Reset	0	0	0	0	0	0	0	0

Bits 15:8 – CCMP[15:8] Capture/Compare Value High Byte
These bits hold the MSB of the 16-bit compare, capture, and top value.

Bits 7:0 – CCMP[7:0] Capture/Compare Value Low Byte
These bits hold the LSB of the 16-bit compare, capture, and top value.

chanhvinh.com

23. TCD - 12-Bit Timer/Counter Type D

23.1 Features

- 12-Bit Timer/Counter
- Programmable Prescaler
- Double-Buffered Compare Registers
- Waveform Generation:
  - One Ramp mode
  - Two Ramp mode
  - Four Ramp mode
  - Dual Slope mode
- Two Separate Input Channels
- Software and Input Based Capture
- Programmable Filter for Input Events
- Conditional Waveform Generation on External Events:
  - Fault handling
  - Input blanking
  - Overload protection
  - Fast emergency stop by the hardware
- Half-Bridge and Full-Bridge Output Support

23.2 Overview

The Timer/Counter type D (TCD) is a high-performance waveform generator that consists of an asynchronous counter, a prescaler, and compare, capture and control logic.

The TCD contains a counter that can run on a clock that is asynchronous to the peripheral clock. It contains compare logic that generates two independent outputs with optional dead-time. It is connected to the Event System for capture and deterministic Fault control. The timer/counter can generate interrupts and events on compare match and overflow.

This device provides one instance of the TCD peripheral, TCD0.

chanhvinh.com

23.2.1 Block Diagram

Figure 23-1. Timer/Counter Block Diagram

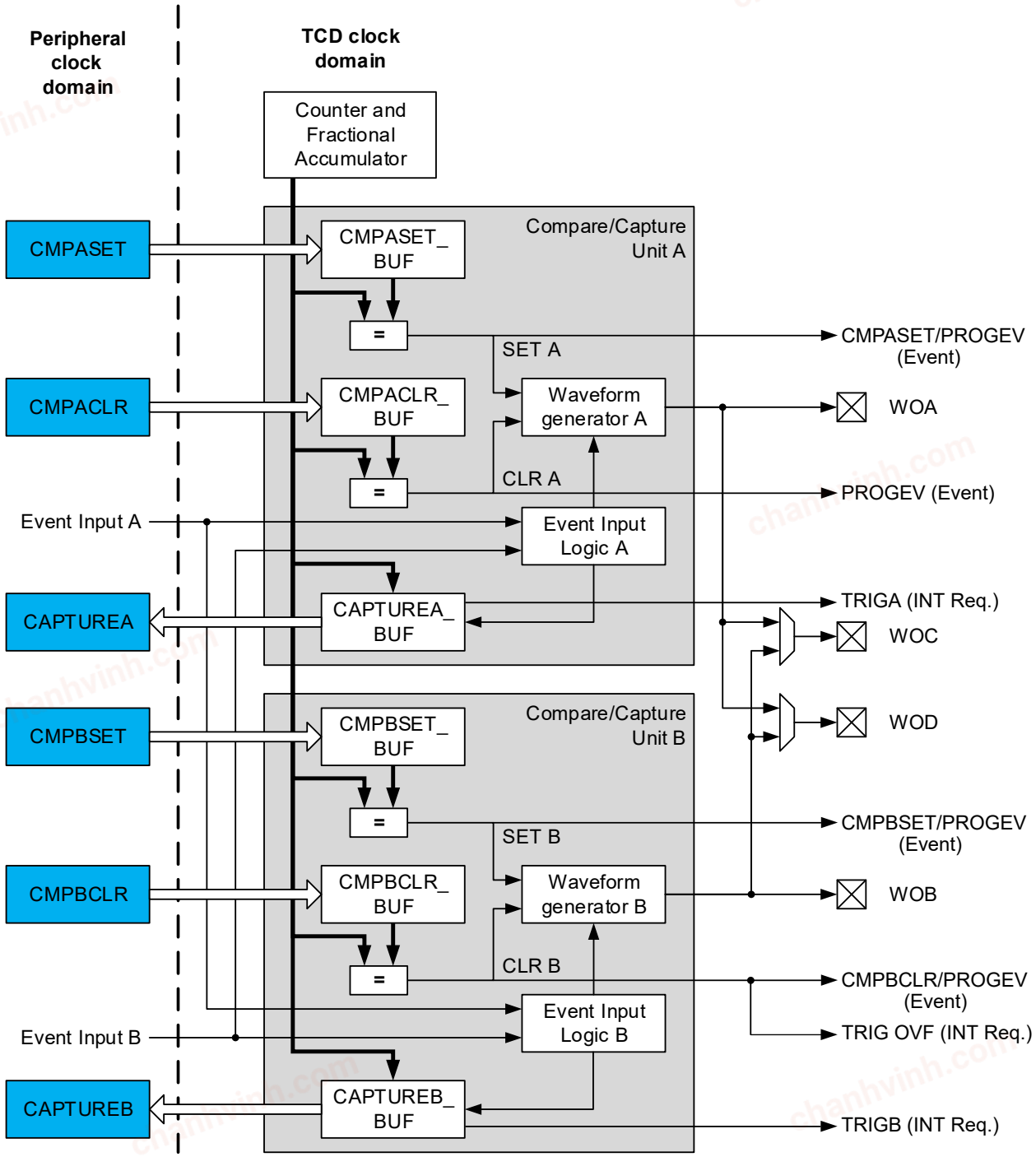

The TCD core is asynchronous to the peripheral clock. The timer/counter consists of two compare/capture units, each with a separate waveform output. There are also two extra waveform outputs, which can be equal to the output from one of the units. For each compare/capture unit, there is a pair of compare registers which is stored in the respective peripheral (TCDn.CMPASET, TCDn.CMPACLR, TCDn.CMPBSET, TCDn.CMPBCLR) registers.

During normal operation, the counter value is continuously compared to the compare registers. This is used to generate both interrupts and events.

chanhvinh.com

The TCD can use the input events in ten different input modes, selected separately for the two input events. The input mode defines how the input events will affect the outputs and where in the TCD cycle the counter must go when an event occurs.

The TCD can select between four different clock sources that can be prescaled. There are three different prescalers with separate controls, as shown below.

Figure 23-2. Clock Selection and Prescalers Overview

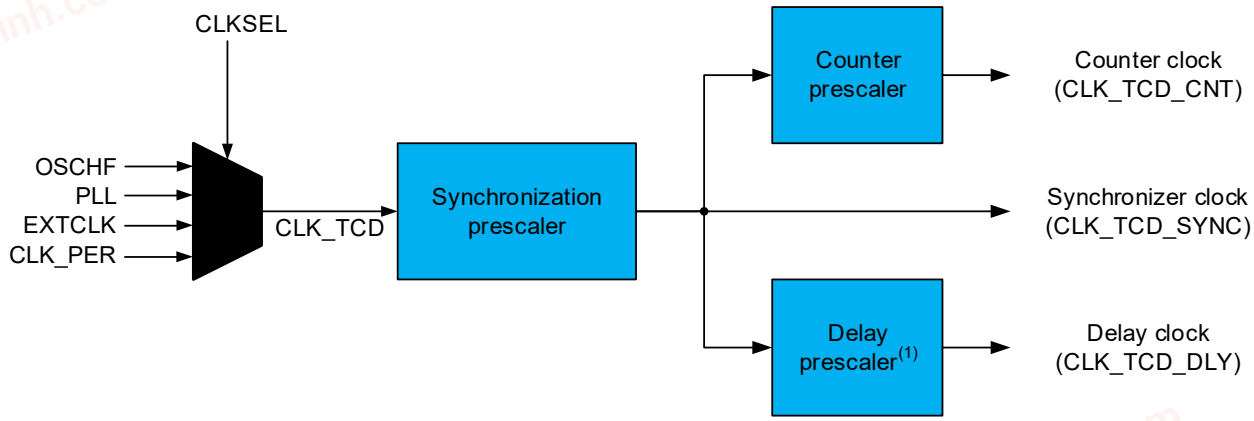

1. Used by input blanking/delay event out.

The TCD synchronizer clock is separate from the other module clocks, enabling faster synchronization between the TCD domain and the I/O domain.

The total prescaling for the counter is:

$$SYNCPRESC_division_factor \times CNTPRESC_division_factor$$

The delay prescaler is used to prescale the clock utilized for the input blanking/delayed event output functionality. The prescaler can be configured independently, allowing separate range and accuracy settings from the counter functionality. The synchronization prescaler and counter prescaler can be configured from the Control A (TCDn.CTRLA) register, while the delay prescaler can be configured from the Delay Control (TCDn.DLYCTRL) register.

23.2.2 Signal Description

Signal	Description	Type
WOA	TCD waveform output A	Digital output
WOB	TCD waveform output B	Digital output
WOC	TCD waveform output C	Digital output
WOD	TCD waveform output D	Digital output

23.3 Functional Description

23.3.1 Definitions

The following definitions are used throughout the documentation:

Table 23-1. Timer/Counter Definitions

Name	Description
TCD cycle	The sequence of four states that the counter needs to go through before it has returned to the same position

chanhvinh.com

.....continued	
Name	**Description**
Input blanking	The functionality to ignore an event input for a programmable time in a selectable part of the TCD cycle
Asynchronous output control	Allows the event to override the output instantly when an event occurs. It is used for handling non-recoverable Faults.
One ramp	The counter is reset to zero once during a TCD cycle
Two ramp	The counter is reset to zero two times during a TCD cycle
Four ramp	The counter is reset to zero four times during a TCD cycle
Dual ramp	The counter counts both up and down between zero and a selected top value during a TCD cycle
Input mode	A predefined setting that changes the output characteristics, based on the given input events

23.3.2 Initialization

To initialize the TCD:

1. Select the clock source and the prescaler from the Control A (TCDn.CTRLA) register.
2. Select the Waveform Generation mode from the Control B (TCDn.CTRLB) register.
3. Optional: Configure the other static registers to the desired functionality.
4. Write the initial values in the Compare (TCDn.CMPxSET/CLR) registers.
5. Optional: Write the desired values to the other double-buffered registers.
6. Ensure that the Enable Ready (ENRDY) bit in the Status (TCDn.STATUS) register is set to '1'.
7. Enable the TCD by writing a '1' to the ENABLE bit in the Control A (TCDn.CTRLA) register.

23.3.3 Operation

23.3.3.1 Register Synchronization Categories

Most of the I/O registers need to be synchronized to the TCD core clock domain, which is done differently for different register categories.

Table 23-2. Categorization of Registers

Enable and Command Registers	Double-Buffered Registers	Static Registers	Read-Only Registers	Normal I/O Registers
TCDn.CTRLA (ENABLE bit)	TCDn.DLYCTRL	TCDn.CTRLA(1) (all bits except ENABLE bit)	TCDn.STATUS	TCDn.INTCTRL
TCDn.CTRLE	TCDn.DLYVAL	TCDn.CTRLB	TCDn.CAPTUREA	TCDn.INTFLAGS
	TCDn.DITCTRL	TCDn.CTRLC	TCDn.CAPTUREB	
	TCDn.DITVAL	TCDn.CTRLD		
	TCDn.DBGCTRL	TCDn.EVCTRLA		
	TCDn.CMPASET	TCDn.EVCTRLB		
	TCDn.CMPACLR	TCDn.INPUTCTRLA		
	TCDn.CMPBSET	TCDn.INPUTCTRLB		
	TCDn.CMPBCLR	TCDn.FAULTCTRL(2)		

© 2021 Microchip Technology Inc. and its subsidiaries

chanhvinh.com

Notes:

1. The bits in the Control A (TCDn.CTRLA) register are enable-protected, except the ENABLE bit. They can only be written when ENABLE is written to '0' first.
2. This register is protected by the Configuration Change Protection Mechanism, requiring a timed write procedure for changing its value settings.

Enable and Command Registers

Because of the synchronization between the clock domains, it is only possible to change the ENABLE bit in the Control A (TCDn.CTRLA) register, while the Enable Ready (ENRDY) bit in the Status (TCDn.STATUS) register is '1'.

The Control E (TCDn.CTRLE) register is automatically synchronized to the TCD core domain when the TCD is enabled and as long as no synchronization is ongoing already. Check if the Command Ready (CCMDRDY) bit in the TCDn.STATUS register is '1' to ensure that it is possible to issue a new command. The TCDn.CTRLE is a strobe register that will clear itself when the command is sent.

Double-Buffered Registers

The double-buffered registers can be updated in normal I/O writes while the TCD is enabled, and no synchronization between the two clock domains is ongoing. Check that the CMDRDY bit in the TCDn.STATUS register is '1' to ensure that it is possible to update the double-buffered registers. The values will be synchronized to the TCD core domain when a synchronization command is sent or when the TCD is enabled.

Table 23-3. Issuing Synchronization Command

Synchronization Issuing Bit	Double Register Update
CTRLC.AUPDATE	Every time the TCDn.CMPBCLRH register is written, the synchronization occurs at the end of the TCD cycle
CTRLE.SYNC (1)	Occurs once, as soon as the SYNC bit is synchronized with the TDC domain
CTRLE.SYNCEOC (1)	Occurs once at the end of the next TCD cycle

Note:

1. If the synchronization is already ongoing, the action has no effect.

Static Registers

Static registers cannot be updated while the TCD is enabled. Therefore, these registers must be configured before enabling the TCD. To see if the TCD is enabled, check if the ENABLE bit in the TCDn.CTRLA register is read as '1'.

Normal I/O and Read-Only Registers

Normal I/O and read-only registers are not constrained by any synchronization between the domains. The read-only registers inform about synchronization status and values synchronized from the core domain.

23.3.3.2 Waveform Generation Modes

The TCD provides four different Waveform Generation modes controlled by the Waveform Generation Mode (WGMODE) bit field in the Control B (TCDn.CTRLB) register. The Waveform Generation modes are:

- One Ramp mode
- Two Ramp mode
- Four Ramp mode
- Dual Slope mode

The Waveform Generation modes determine how the counter is counting during a TCD cycle and how the compare values influence the waveform. A TCD cycle is split into these states:

- Dead-time WOA (DTA)
- On-time WOA (OTA)
- Dead-time WOB (DTB)
- On-time WOB (OTB)

© 2021 Microchip Technology Inc. and its subsidiaries

chanhvinh.com

The Compare A Set (CMPASET), Compare A Clear (CMPACLR), Compare B Set (CMPBSET), and Compare B Clear (CMPBCLR) compare values define when each state ends and the next begins.

23.3.3.2.1 One Ramp Mode

In One Ramp mode, the TCD counter counts up until it reaches the CMPBCLR value. Then, the TCD cycle is completed, and the counter restarts from `0x000`, beginning a new TCD cycle. The TCD cycle period is:

$$T_{\text{TCD_cycle}} = \frac{(\text{CMPBCLR} + 1)}{f_{\text{CLK_TCD_CNT}}}$$

Figure 23-3. One Ramp Mode

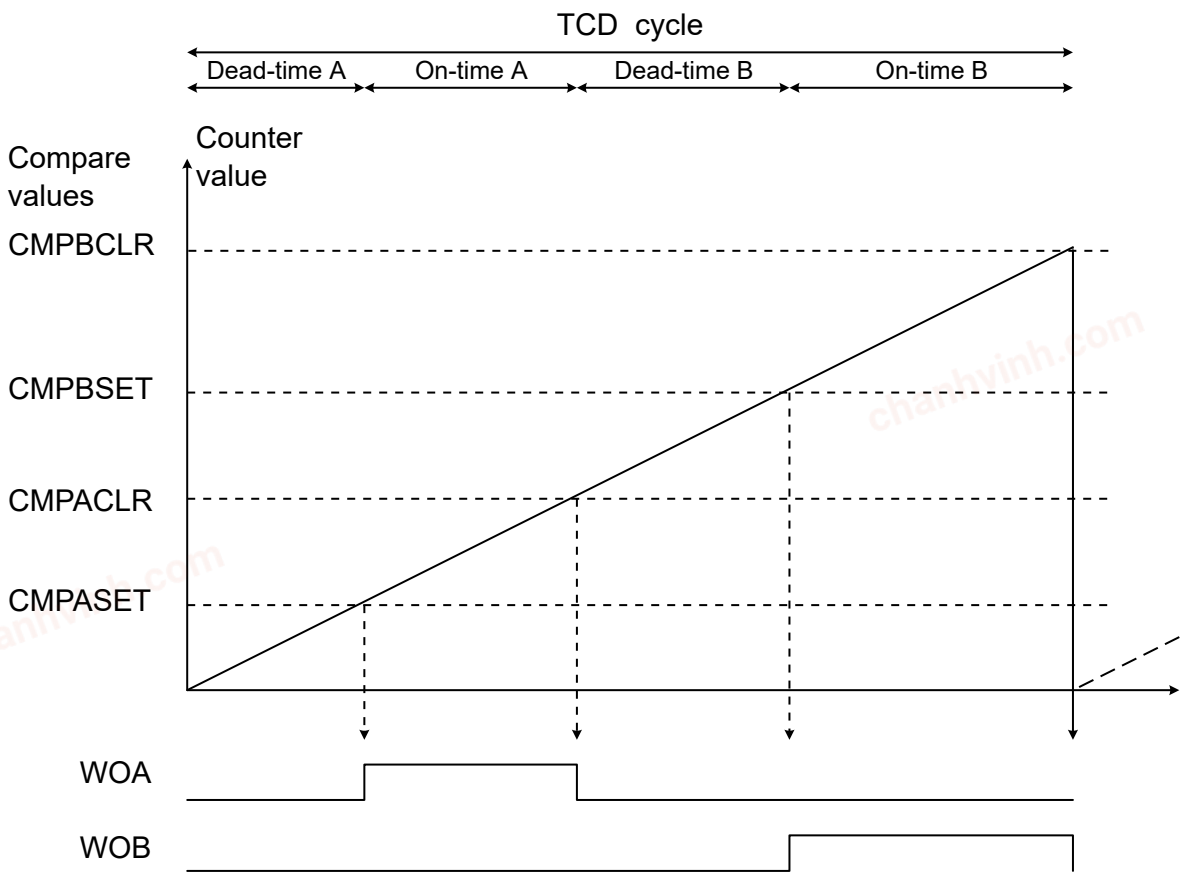

In the figure above, *CMPASET* < *CMPACLR* < *CMPBSET* < *CMPBCLR*. In One Ramp mode, this is required to avoid overlapping outputs during the on-time. The figure below is an example where *CMPBSET* < *CMPASET* < *CMPACLR* < *CMPBCLR*, which has overlapping outputs during the on-time.

chanhvinh.com

Figure 23-4. One Ramp Mode with *CMPBSET* < *CMPASET*

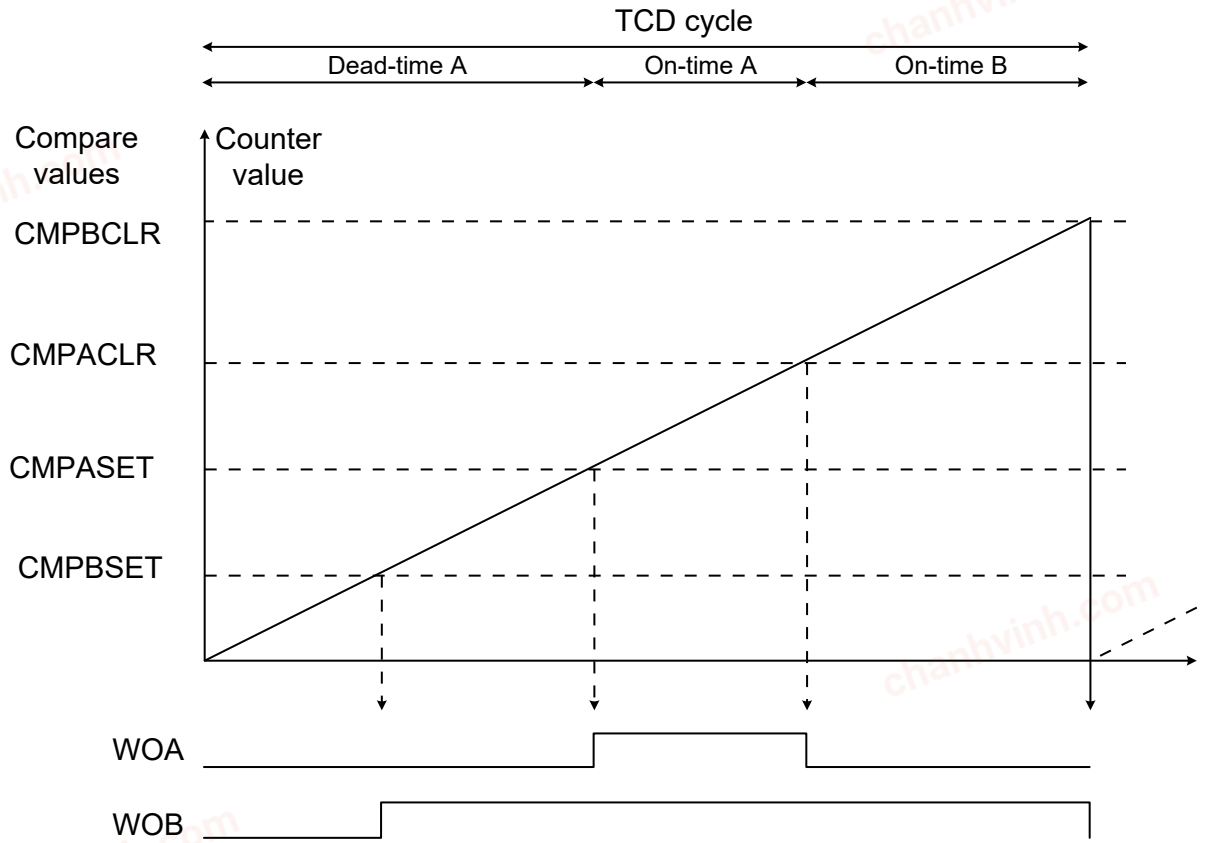

A match with CMPBCLR will always result in all outputs being cleared. If any of the other compare values are bigger than CMPBCLR, their associated effect will never occur. If the CMPACLR is smaller than the CMPASET value, the clear value will not have any effect.

23.3.3.2.2 Two Ramp Mode

In Two Ramp mode, the TCD counter counts up until it reaches the CMPACLR value, then it resets and counts up until it reaches the CMPBCLR value. Then, the TCD cycle is completed, and the counter restarts from `0x000`, beginning a new TCD cycle. The TCD cycle period is given by:

$$T_{\mathrm{TCD_cycle}} = \frac{(\mathrm{CMPACLR} + 1 + \mathrm{CMPBCLR} + 1)}{f_{\mathrm{CLK_TCD_CNT}}}$$

chanhvinh.com

Figure 23-5. Two Ramp Mode

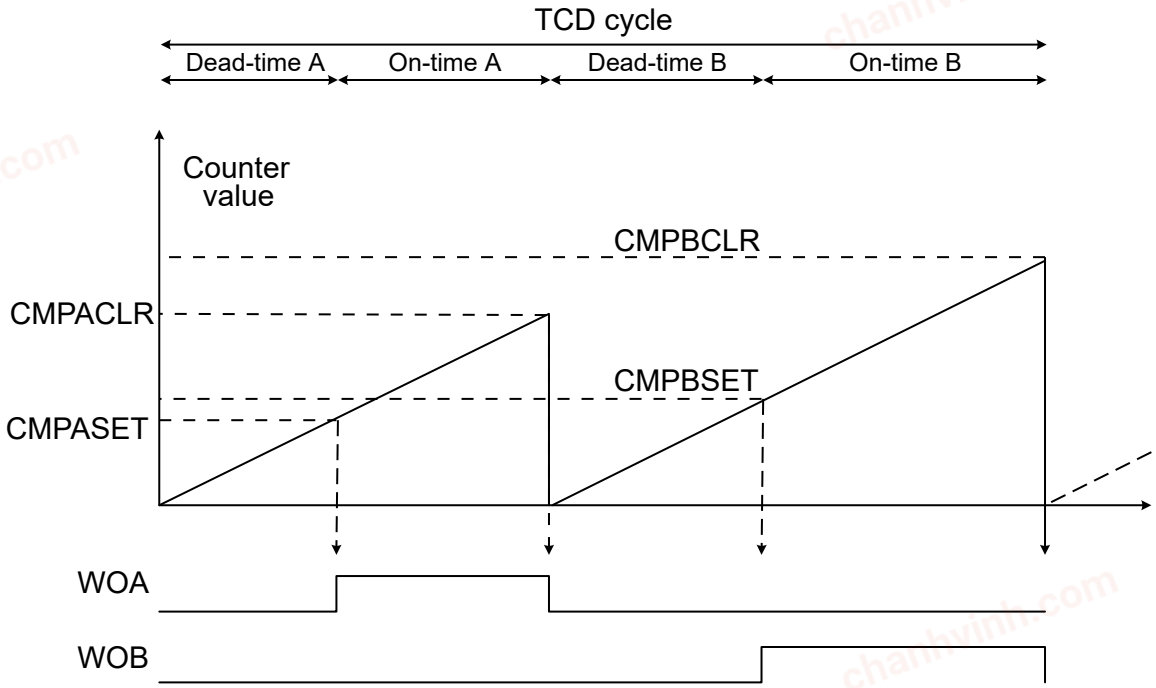

In the figure above, *CMPASET* < *CMPACLR* and *CMPBSET* < *CMPBCLR*. This causes the outputs to go high. There are no restrictions on the CMPASET and CMPACLR compared to the CMPBSET and CMPBCLR values.

In Two Ramp mode, it is not possible to get overlapping outputs without using the override feature. Even if *CMPASET/CMPBSET* > *CMPACLR/CMPBCLR*, the counter resets at CMPACLR/CMPBCLR and will never reach CMPASET/CMPBSET.

23.3.3.2.3 Four Ramp Mode

In Four Ramp mode, the TCD cycle follows this pattern:

1. A TCD cycle begins with the TCD counter counting up from zero until it reaches the CMPASET value, and resets to zero.
2. The counter counts up until it reaches the CMPACLR value and resets to zero.
3. The counter counts up until it reaches the CMPBSET value and resets to zero.
4. The counter counts up until it reaches the CMPBCLR value and ends the TCD cycle by resetting it to zero.

The TCD cycle period is given by:

$$T_{\mathrm{TCD_cycle}} = \frac{(\mathrm{CMPASET}+1)+(\mathrm{CMPACLR}+1)+(\mathrm{CMPBSET}+1)+(\mathrm{CMPBCLR}+1)}{f_{\mathrm{CLK_TCD_CNT}}}$$

chanhvinh.com

Figure 23-6. Four Ramp Mode

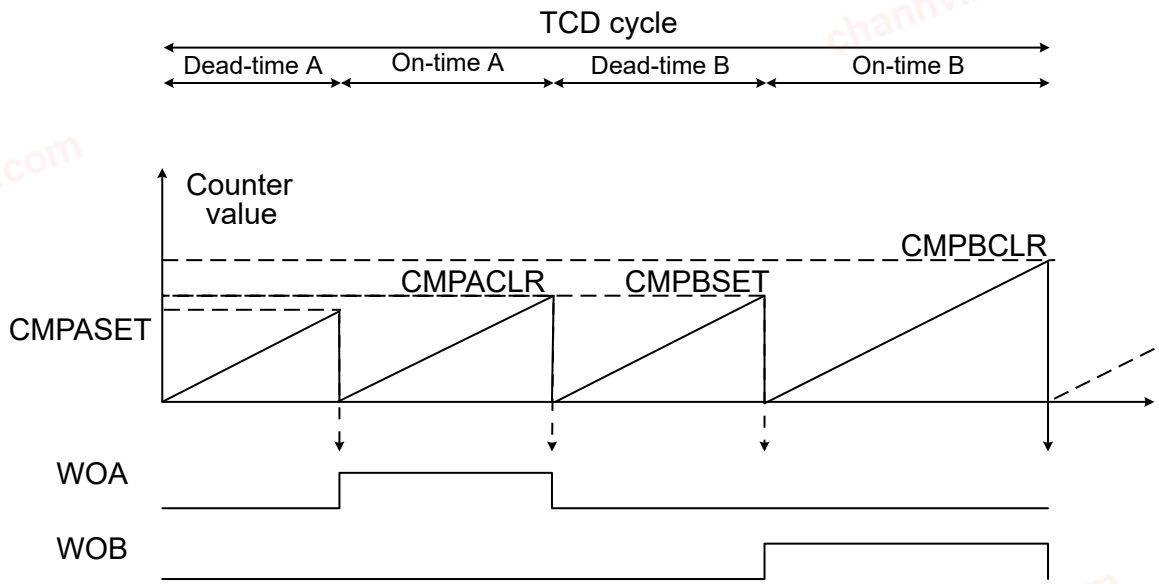

There are no restrictions regarding the compare values because there are no dependencies between them.

In Four Ramp mode, it is not possible to get overlapping outputs without using the override feature.

23.3.3.2.4 Dual Slope Mode

In Dual Slope mode, a TCD cycle consists of the TCD counter counting down from the CMPBCLR value to zero and up again to the CMPBCLR value, which gives a TCD cycle period:

$$T_{\text{TCD_cycle}} = \frac{2 \times (\text{CMPBCLR} + 1)}{f_{\text{CLK_TCD_CNT}}}$$

The WOA output is set when the TCD counter counts down and matches the CMPASET value. WOA is cleared when the TCD counter counts up and matches the CMPASET value.

The WOB output is set when the TCD counter counts up and matches the CMPBSET value. WOB is cleared when the TCD counter counts down and matches the CMPBSET value.

The outputs will overlap if *CMPASET* > *CMPBSET*.

CMPACLR is not used in Dual Slope mode. Writing a value to CMPACLR has no effect.

Figure 23-7. Dual Slope Mode

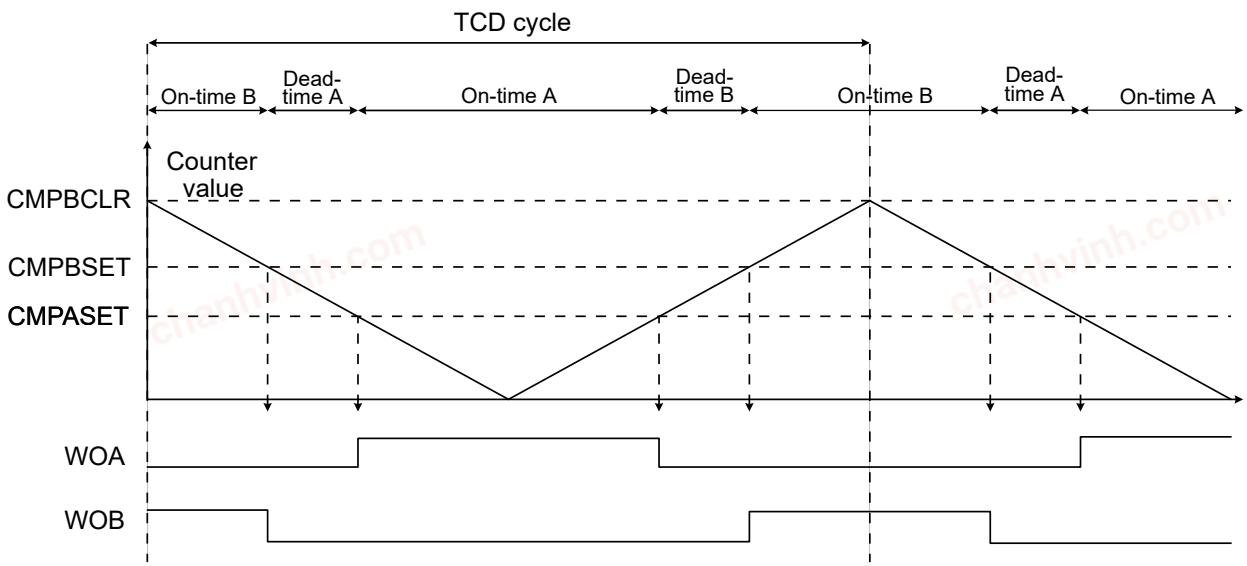

chanhvinh.com

When starting the TCD in Dual Slope mode, the TCD counter starts at the CMPBCLR value and counts down. In the first cycle, the WOB will not be set until the TCD counter matches the CMPBSET value when counting up.

When the Disable at End of Cycle Strobe (DISEOC) bit in the Control E (TCDn.CTRLE) register is set, the TCD will automatically be disabled at the end of the TCD cycle.

Figure 23-8. Dual Slope Mode Starting and Stopping

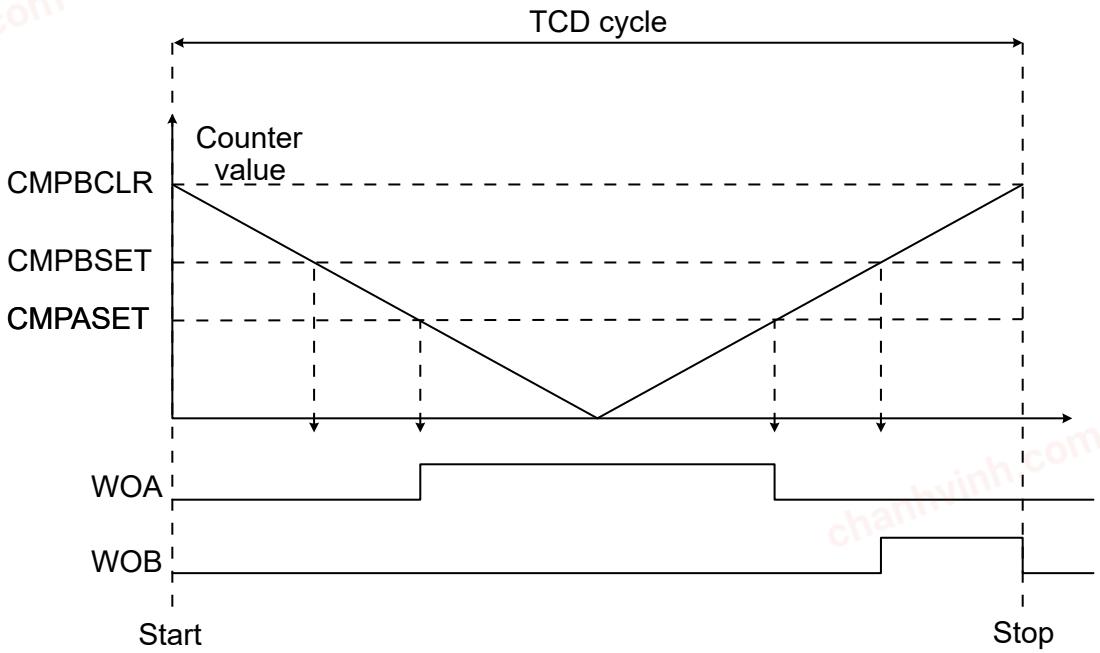

23.3.3.3 Disabling TCD

Disabling the TCD can be done in two different ways:

1. By writing a '0' to the ENABLE bit in the Control A (TCDn.CTRLA) register. This disables the TCD instantly when synchronized to the TCD core domain.
2. By writing a '1' to the Disable at End of Cycle Strobe (DISEOC) bit in the Control E (TCDn.CTRLE) register. This disables the TCD at the end of the TCD cycle.

23.3.3.4 TCD Inputs

The TCD has two inputs connected to the Event System: Input A and input B. Each input has a functionality connected to the corresponding output (WOA and WOB). This functionality is controlled by the Event Control (TCDn.EVCTRLA and TCDn.EVCTRLB) registers and the Input Control (TCDn.INPUTCTRLA and TCDn.INPUTCTRLB) registers.

To enable the input events, write a '1' to the Trigger Event Input Enable (TRIGEI) bit in the corresponding Event Control (TCDn.EVCTRLA or TCDn.EVCTRLB) register. The inputs will be used as a Fault detect by default, but they can also be used as a capture trigger. To enable a capture trigger, write a '1' to the ACTION bit in the corresponding Event Control (TCDn.EVCTRLA or TCDn.EVCTRLB) register. The INPUTMODE bit field in the corresponding Input Control (TCDn.INPUTCTRLA or TCDn.INPUTCTRLB) register must be written to '0' to disable Fault detect.

There are ten different input modes for Fault detection. The two inputs have the same functionality, except for input blanking, which is only supported by input A. Input blanking is configured by the Delay Control (TCDn.DLYCTRL) register and the Delay Value (TCDn.DLYVAL) register.

The inputs are connected to the Event System. The connections between the event source and the TCD input must be configured in the Event System.

© 2021 Microchip Technology Inc. and its subsidiaries

chanhvinh.com

Figure 23-9. TCD Input Overview

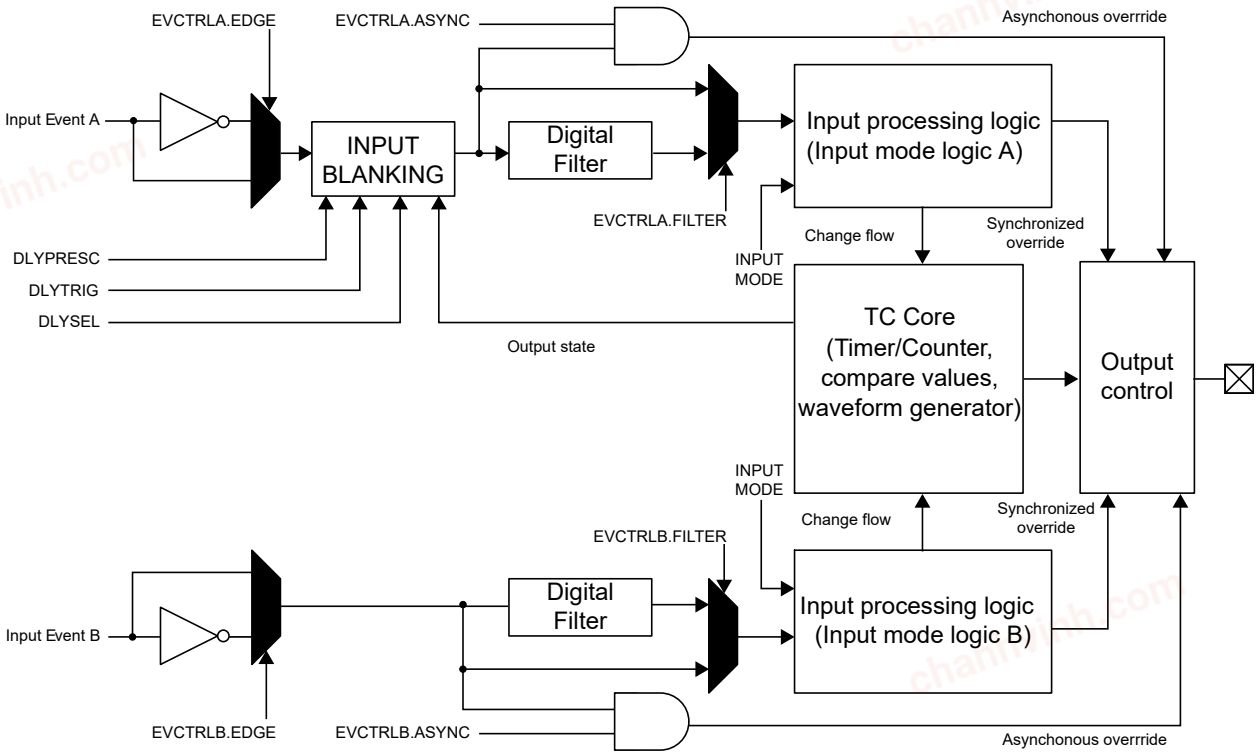

There is a delay of two/three clock cycles on the TCD synchronizer clock between receiving the input event, processing it, and overriding the outputs. If using the asynchronous event detection, the outputs will override instantly outside the input processing.

23.3.3.4.1 Input Blanking

Input blanking functionality masks out the input events for a programmable time in a selectable part of the TCD cycle. Input blanking can be used to mask out 'false' input events triggered right after changes on the outputs occur.

Input blanking can be enabled by configuring the Delay Select (DLYSEL) bit field in the Delay Control (TCDn.DLYCTRL) register. The trigger source is selected by the Delay Trigger (DLYTRIG) bit field in TCDn.DLYCTRL.

Input blanking uses the delay clock. After a trigger, a counter counts up until the Delay Value (DLYVAL) bit field in the Delay Value (TCDn.DLYVAL) register is reached. Afterward, input blanking is turned off. The TCD delay clock is a prescaled version of the synchronizer clock (CLK_TCD_SYNC). The division factor is set by the Delay Prescaler (DLYPRESC) bit field in the Delay Control (TCDn.DLYCTRL) register. The duration of the input blanking is given by:

$$t_{\mathrm{BLANK}} = \frac{\mathrm{DLYPRESC_division_factor} \times \mathrm{DLYVAL}}{f_{\mathrm{CLK_TCD_SYNC}}}$$

Input blanking uses the same logic as the programmable output event. For this reason, it is not possible to use both at the same time.

23.3.3.4.2 Digital Filter

The digital filter for event input x is enabled by writing a '1' to the FILTER bit in the corresponding Event Control (TCDn.EVCTRLA or TCDn.EVCTRLB) register. When the digital filter is enabled, any pulse lasting less than four counter clock cycles will be filtered out. Therefore, any change on the incoming event will take four counter clock cycles before it affects the input processing logic.

23.3.3.4.3 Asynchronous Event Detection

To enable asynchronous event detection on an input event, the Event Configuration (CFG) bit field in the corresponding Event Control (TCDn.EVCTRLA or TCDn.EVCTRLB) register must be configured accordingly.

chanhvinh.com

The asynchronous event detection makes it possible to asynchronously override the output when the input event occurs. What the input event will do depends on the input mode. The outputs have direct override while the counter flow will be changed when the event is synchronized to the synchronizer clock (CLK_TCD_SYNC).

It is not possible to use asynchronous event detection and digital filter at the same time.

23.3.3.4.4 Software Commands

The following table displays the commands for the TCD module.

Table 23-4. Software Commands

Trigger	Software Command
The SYNCEOC bit in the TCDn.CTRLE register	Update the double-buffered registers at the end of the TCD cycle
The SYNC bit in the TCDn.CTRLE register	Update the double-buffered registers
The RESTART bit in the TCDn.CTRLE register	Restart the TCD counter
The SCAPTUREA bit in the TCDn.CTRLE register	Capture to Capture A (TCDn.CAPTUREAL/H) register
The SCAPTUREB bit in the TCDn.CTRLE register	Capture to Capture B (TCDn.CAPTUREBL/H) register

23.3.3.4.5 Input Modes

The user can select between ten input modes. The selection is made by writing to the Input Mode (INPUTMODE) bit field in the Input Control (TCDn.INPUTCTRLA and TCDn.INPUTCTRLB) registers.

Input Modes Validity

Not all input modes work in all Waveform Generation modes. The table below shows the Waveform Generation modes in which the different input modes are valid.

Table 23-5. Input Modes Validity

INPUTMODE	One Ramp Mode	Two Ramp Mode	Four Ramp Mode	Dual Slope Mode
0	Valid	Valid	Valid	Valid
1	Valid	Valid	Valid	Do not use
2	Do not use	Valid	Valid	Do not use
3	Do not use	Valid	Valid	Do not use
4	Valid	Valid	Valid	Valid
5	Do not use	Valid	Valid	Do not use
6	Do not use	Valid	Valid	Do not use
7	Valid	Valid	Valid	Valid
8	Valid	Valid	Valid	Do not use
9	Valid	Valid	Valid	Do not use
10	Valid	Valid	Valid	Do not use

Input Mode 0: Input Has No Action

In Input mode 0, the inputs do not affect the outputs, but they can still trigger captures and interrupts if enabled.

chanhvinh.com

Figure 23-10. Input Mode 0

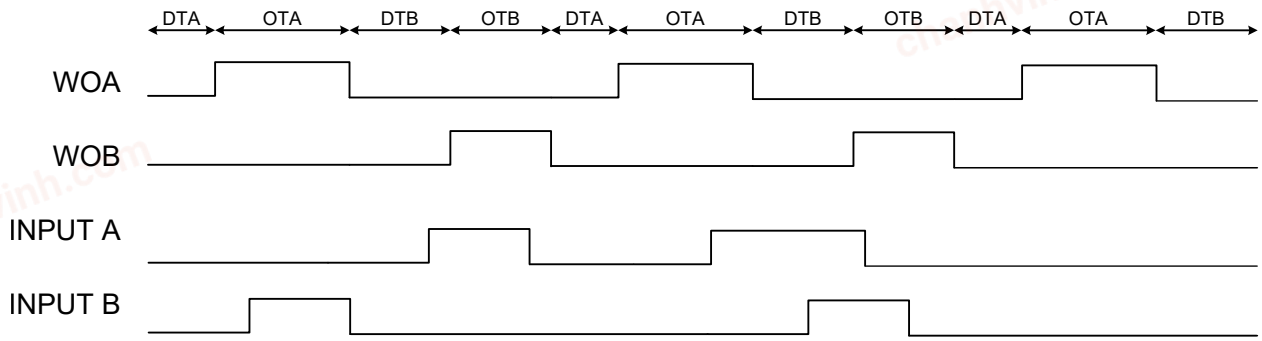

Input Mode 1: Stop Output, Jump to the Opposite Compare Cycle, and Wait

An input event in Input mode 1 will stop the output signal, jump to the opposite dead-time, and wait until the input event goes low before the TCD counter continues.

If Input mode 1 is used on input A, an event will only affect if the TCD is in dead-time A or on-time A, and it will affect only the WOA output. When the event is done, the TCD counter starts at dead-time B.

Figure 23-11. Input Mode 1 on Input A

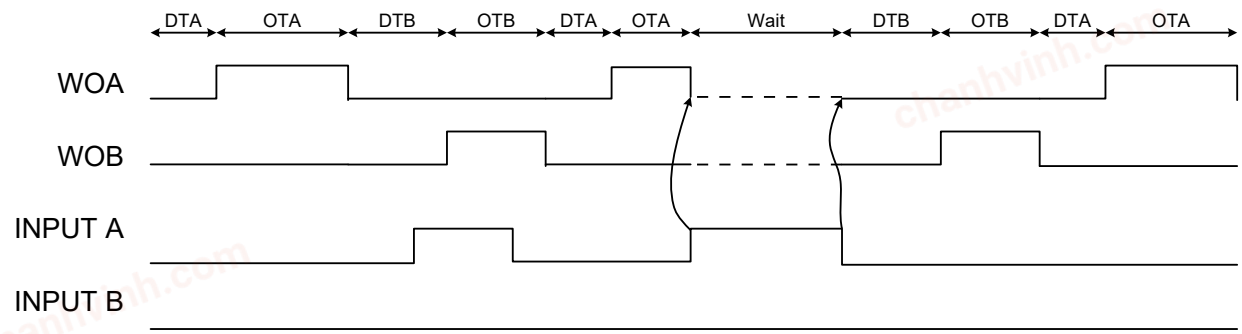

If Input mode 1 is used on input B, an event will only affect if the TCD is in dead-time B or on-time B, and it will affect only the WOB output. When the event is done, the TCD counter starts at dead-time A.

Figure 23-12. Input Mode 1 on Input B

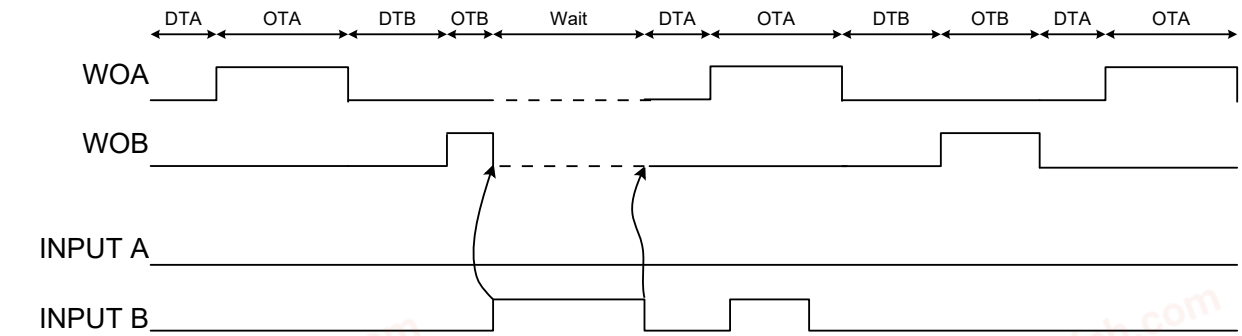

Input Mode 2: Stop Output, Execute Opposite Compare Cycle, and Wait

An input event in Input mode 2 will stop the output signal, execute to the opposite dead-time and on-time, and then wait until the input event goes low before the TCD counter continues. If the input is done before the opposite dead-time and on-time have finished, there will be no waiting, but the opposite dead-time and on-time will continue.

If Input mode 2 is used on input A, an event will only affect if the TCD is in dead-time A or on-time A, and will affect only the WOA output.

© 2021 Microchip Technology Inc.
and its subsidiaries

chanhvinh.com

Figure 23-13. Input Mode 2 on Input A

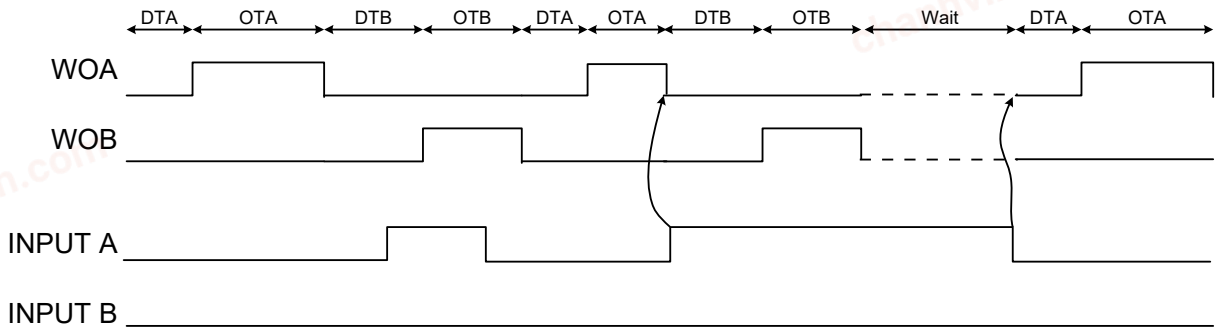

If Input mode 2 is used on input B, an event will only affect if the TCD is in dead-time B or on-time B, and it will affect only the WOB output.

Figure 23-14. Input Mode 2 on Input B

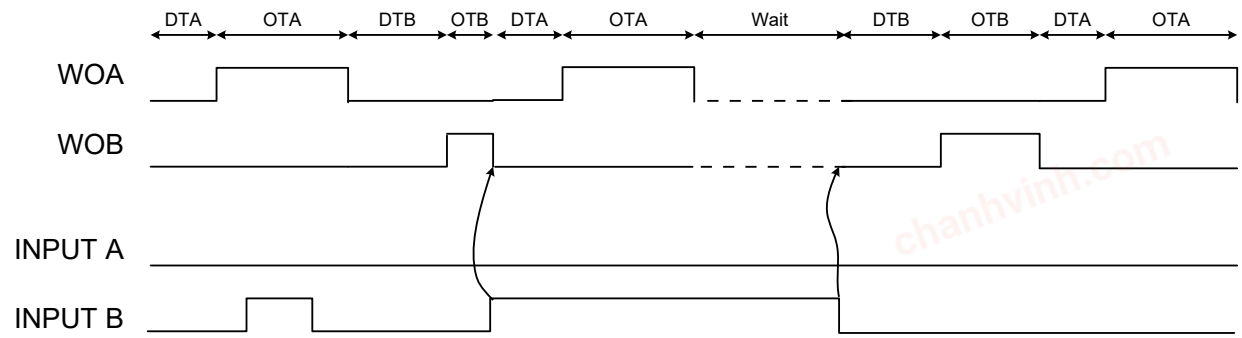

Input Mode 3: Stop Output, Execute Opposite Compare Cycle while Fault Active

An input event in Input mode 3 will stop the output signal and start executing the opposite dead-time and on-time repetitively, as long as the Fault/input is active. When the input is released, the ongoing dead-time and/or on-time will finish, and then the normal flow will start.

If Input mode 3 is used on input A, an event will only affect if the TCD is in dead-time A or on-time A.

Figure 23-15. Input Mode 3 on Input A

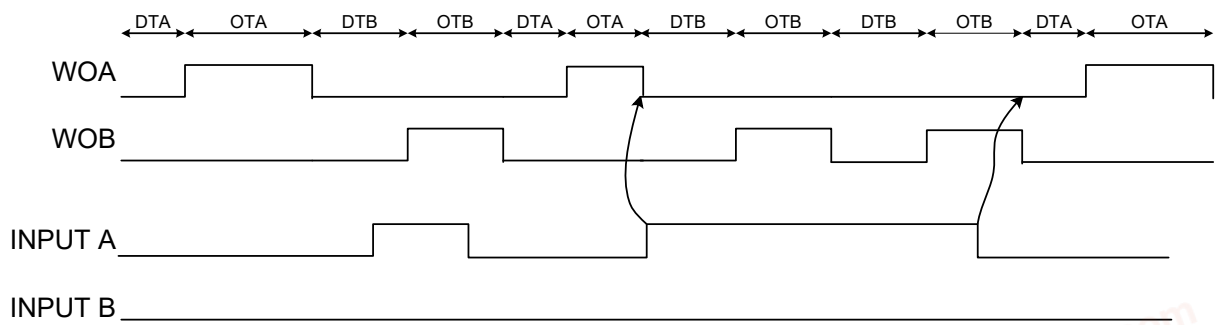

If Input mode 3 is used on input B, an event will only affect if the TCD is in dead-time B or on-time B.

chanhvinh.com

Figure 23-16. Input Mode 3 on Input B

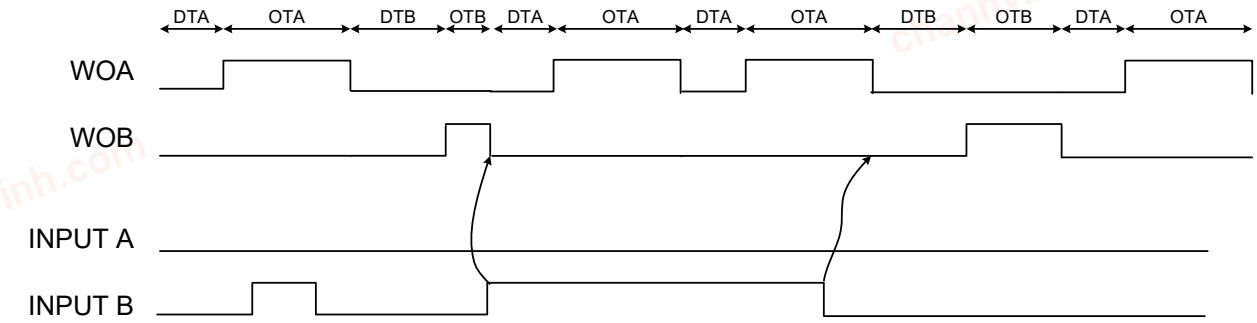

Input Mode 4: Stop all Outputs, Maintain Frequency

When Input mode 4 is used, both input A and input B will give the same functionality. An input event will deactivate the outputs as long as the event is active. The TCD counter will not be affected by events in this input mode.

Figure 23-17. Input Mode 4

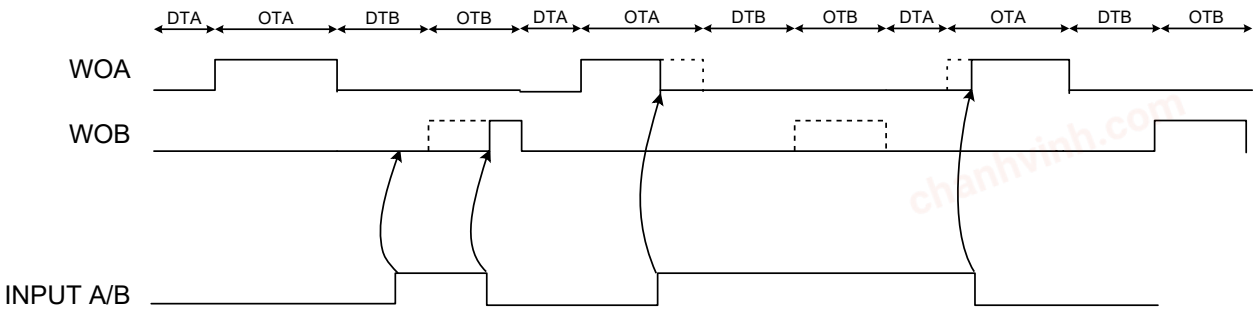

Input Mode 5: Stop all Outputs, Execute Dead-Time while Fault Active

When Input mode 5 is used, both input A and input B give the same functionality. The input event stops the outputs and starts on the opposite dead-time if it occurs during an on-time. If the event occurs during dead-time, the dead-time will continue until the next on-time is scheduled to start. Though, if the input is still active, the cycle will continue with the other dead-time. As long as the input event is active, alternating dead-times will occur. When the input event stops, the ongoing dead-time will finish, and the next on-time will continue in the normal flow.

Figure 23-18. Input Mode 5

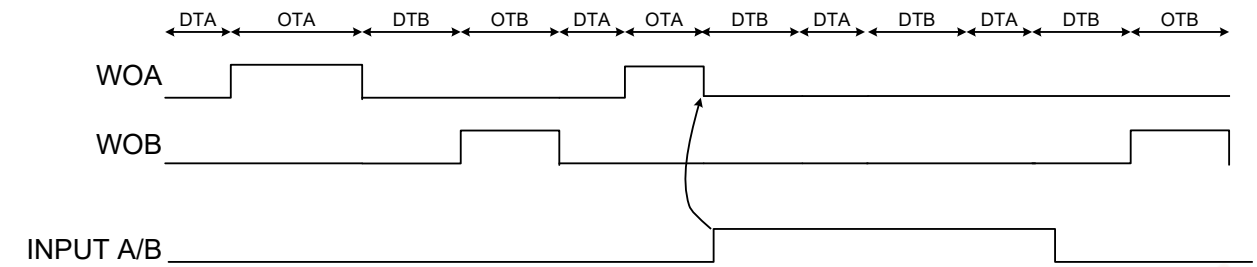

Input Mode 6: Stop All Outputs, Jump to Next Compare Cycle, and Wait

When Input mode 6 is used, both input A and input B will give the same functionality. The input event stops the outputs and jumps to the opposite dead-time if it occurs during an on-time. If the event occurs during dead-time, the dead-time will continue until the next on-time is scheduled to start. As long as the input event is active, the TCD counter will wait. When the input event stops, the next dead-time will start, and normal flow will continue.

© 2021 Microchip Technology Inc.
and its subsidiaries

chanhvinh.com

Figure 23-19. Input Mode 6

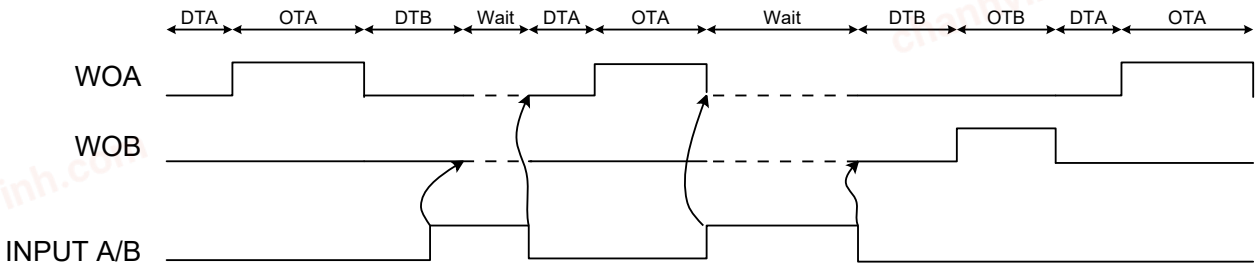

Input Mode 7: Stop all Outputs, Wait for Software Action

When Input mode 7 is used, both input A and input B will give the same functionality. The input events stop the outputs and the TCD counter. It will be stopped until a Restart command is given. If the input event is still high when the Restart command (RESTART bit in TCDn.CTRLE register) is given, it will stop again. When the TCD counter restarts, it will always start on dead-time A.

Figure 23-20. Input Mode 7

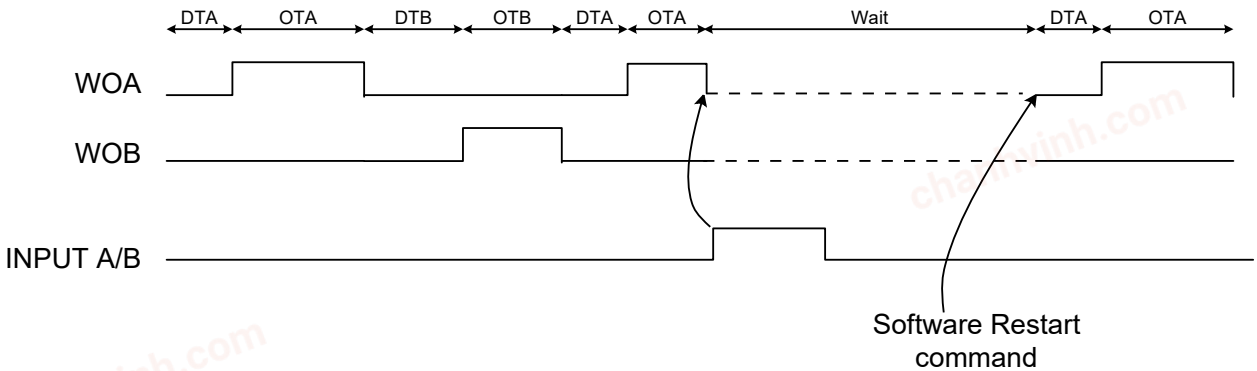

Input Mode 8: Stop Output on Edge, Jump to Next Compare Cycle

In Input mode 8, a positive edge on the input event while the corresponding output is ON will cause the output to stop and the TCD counter to jump to the opposite dead-time.

If Input mode 8 is used on input A and a positive edge on the input event occurs while in on-time A, the TCD counter jumps to dead-time B.

Figure 23-21. Input Mode 8 on Input A

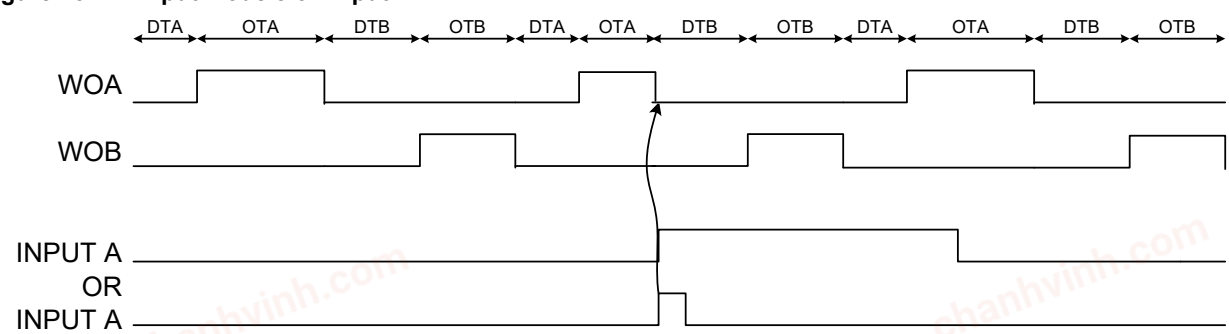

If Input mode 8 is used on input B and a positive edge on the input event occurs while in on-time B, the TCD counter jumps to dead-time A.

chanhvinh.com

Figure 23-22. Input Mode 8 on Input B

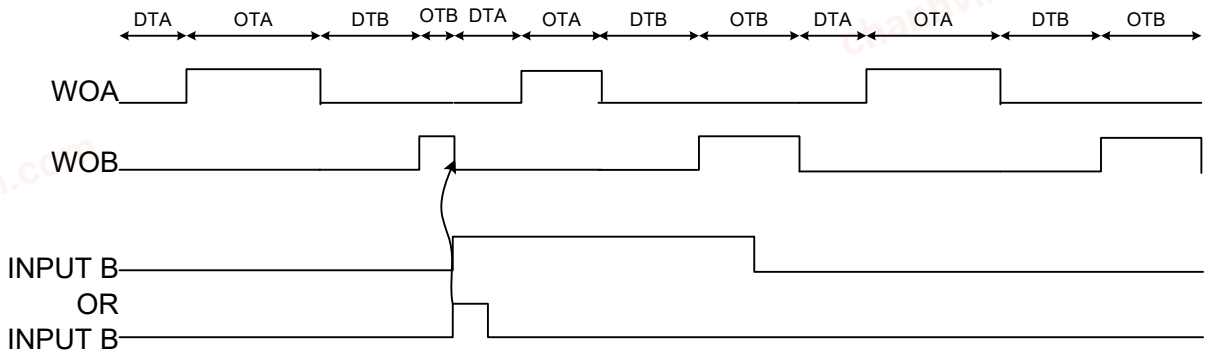

Input Mode 9: Stop Output on Edge, Maintain Frequency

In Input mode 9, a positive edge on the input event while the corresponding output is ON will cause the output to stop during the rest of the on-time. The TCD counter will not be affected by the event, only the output.

If Input mode 9 is used on input A and a positive edge on the input event occurs while in on-time A, the output will be OFF for the rest of the on-time.

Figure 23-23. Input Mode 9 on Input A

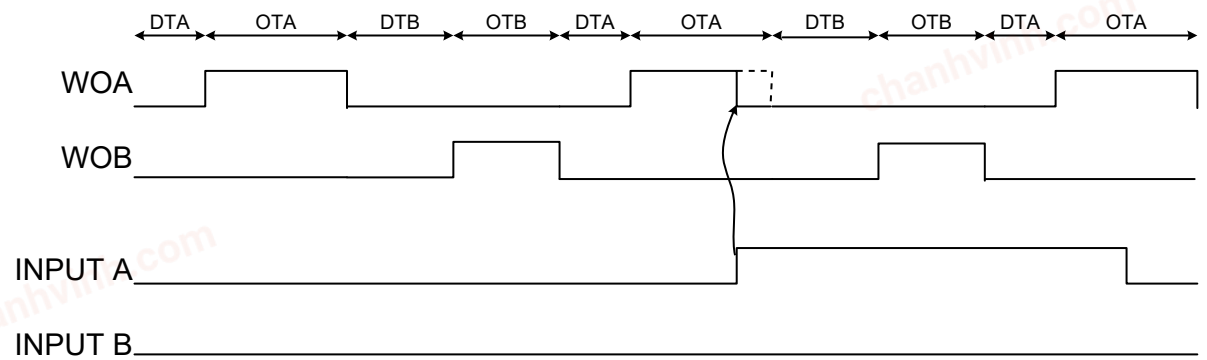

If Input mode 9 is used on input B and a positive edge on the input event occurs while in on-time B, the output will be OFF for the rest of the on-time.

Figure 23-24. Input Mode 9 on Input B

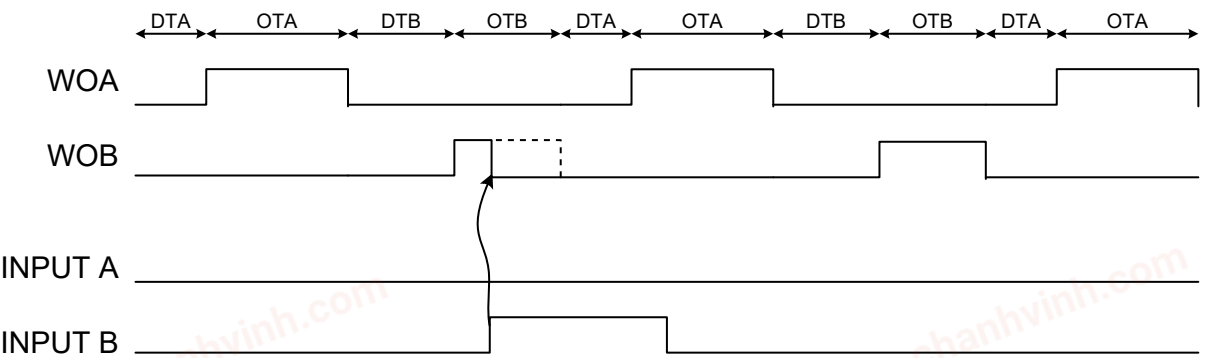

Input Mode 10: Stop Output at Level, Maintain Frequency

In Input mode 10, the input event will cause the corresponding output to stop, as long as the input is active. If the input goes low while there must have been an on-time on the corresponding output, the output will be deactivated for the rest of the on-time. The TCD counter is not affected by the event, only the output.

If Input mode 10 is used on input A and an input event occurs, the WOA will be OFF as long as the event lasts. If released during an on-time, it will be OFF for the rest of the on-time.

chanhvinh.com

Figure 23-25. Input Mode 10 on Input A

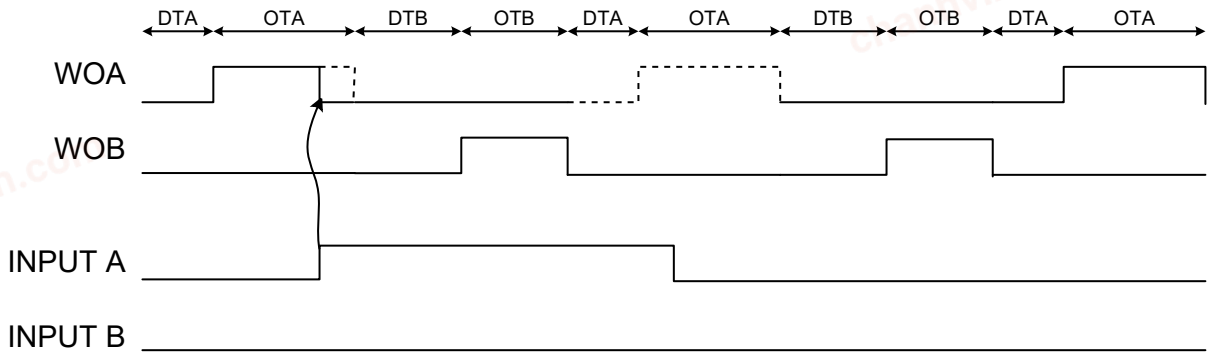

If Input mode 10 is used on input B and an input event occurs, the WOB will be OFF as long as the event lasts. If released during an on-time, it will be OFF for the rest of the on-time.

Figure 23-26. Input Mode 10 on Input B

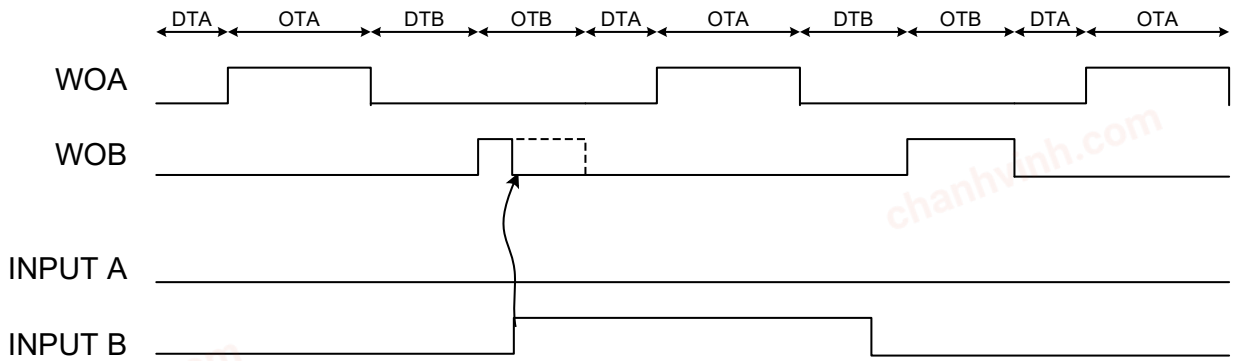

Input Mode Summary

Table 23-6 summarizes the conditions, as illustrated in the timing diagrams of the preceding sections.

Table 23-6. Input Mode Summary

INPUTMODE	Trigger → Output Affected	Fault On/Active	Fault Release/Inactive
0	-	No action	No action
1	Input A→WOA	End the current on-time and wait	Start with dead-time for the other compare
	Input B→WOB		
2	Input A→WOA	End the current on-time, execute the other compare cycle and wait	Start with dead-time for the current compare
	Input B→WOB		
3	Input A→WOA	Execute the current on-time, then execute the other compare cycle repetitively	Re-enable the current compare cycle
	Input B→WOB		
4	Input A→{WOA, WOB}	Deactivate the outputs	
	Input B→{WOA, WOB}		
5	Input A→{WOA, WOB}	Execute dead-time only	
	Input B→{WOA, WOB}		
6	Input A→{WOA, WOB}	End on-time and wait	Start with dead-time for the other compare
	Input B→{WOA, WOB}		

© 2021 Microchip Technology Inc. and its subsidiaries

chanhvinh.com

.....continued

INPUTMODE	Trigger → Output Affected	Fault On/Active	Fault Release/Inactive
7	Input A→{WOA, WOB}	End on-time and wait for software action	Start with dead-time for the current compare
	Input B→{WOA, WOB}		
8	Input A→WOA	End the current on-time and continue with the other off-time	
	Input B→WOB		
9	Input A→WOA	Block the current on-time and continue the sequence	
	Input B→WOB		
10	Input A→WOA	Deactivate on-time until the end of the sequence while the trigger is active	
	Input B→WOB		
other	-	-	-

Note: When using different modes on each event input, consider possible conflicts, keeping in mind that the TCD has a single counter, to avoid unexpected results.

23.3.3.5 Dithering

If it is impossible to achieve the desired frequency because of the prescaler/period selection limitations, dithering can be used to approximate the desired frequency and reduce the waveform drift.

The dither accumulates the fractional error of the counter clock for each cycle. When the fractional error overflows, an additional clock cycle is added to the selected part of the TCD cycle.

Example 23-1. Generate 75 kHz from a 10 MHz Clock

If the timer clock frequency is 10 MHz, it will give the timer a resolution of 100 ns. The desired output frequency is 75 kHz, which means a period of 13,333 ns. This period cannot be achieved with a 100 ns resolution as it would require 133.33 cycles. The output period can be set to either 133 cycles (75.188 kHz) or 134 cycles (74.626 kHz).

It is possible to change the period between the two frequencies manually in the firmware to get an average output frequency of 75 kHz (change every third period to 134 cycles). The dither can do this automatically by accumulating the error (0.33 cycles). The accumulator calculates when the accumulated error is larger than one clock cycle. When that happens, an additional cycle is added to the timer period.

Figure 23-27. Dither Logic

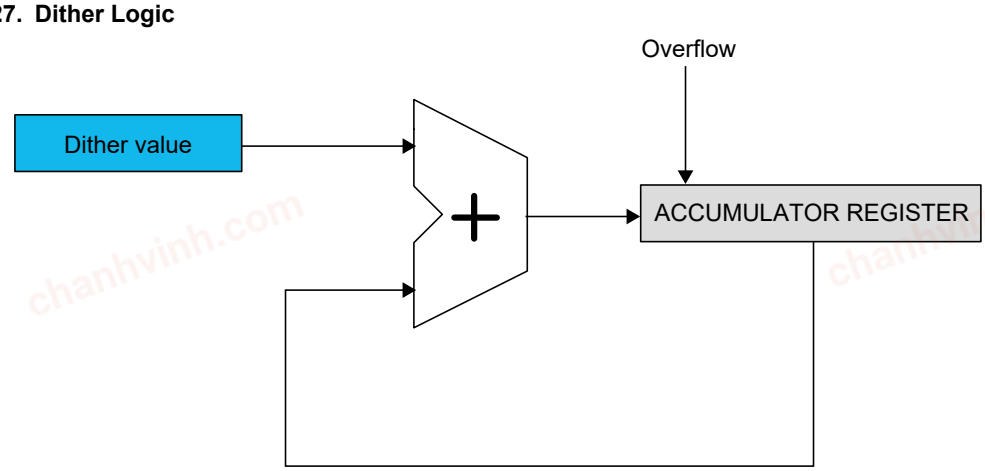

The user can select where in the TCD cycle the dither will be added by writing to the Dither Selection (DITHERSEL) bit field in the Dither Control (TCDn.DITCTRL) register:

chanhvinh.com

- On-time B
- On-time A and B
- Dead-time B
- Dead-time A and B

How much the dithering will affect the TCD cycle time depends on what Waveform Generation mode is used (see Table 23-7). Dithering is not supported in Dual Slope mode.

Table 23-7. Mode-Dependent Dithering Additions to TCD Cycle

WAVEGEN	DITHERSEL in TCDn.DITCTRL	Additional TCD Clock Cycles to TCD Cycle
One Ramp mode	On-time B	1
	On-time A and B	1
	Dead-time B	0
	Dead-time A and B	0
Two Ramp mode	On-time B	1
	On-time A and B	2
	Dead-time B	0
	Dead-time A and B	0
Four Ramp mode	On-time B	1
	On-time A and B	2
	Dead-time B	1
	Dead-time A and B	2
Dual Slope mode	On-time B	Not supported
	On-time A and B	Not supported
	Dead-time B	Not supported
	Dead-time A and B	Not supported

The differences in the number of TCD clock cycles added to the TCD cycle are caused by the different number of compare values used by the TCD cycle. For example, in One Ramp mode, only CMPBCLR affects the TCD cycle time.

For DITHERSEL configurations where no extra cycles are added to the TCD cycles, compensation is reached by shortening the following output state.

Example 23-2. DITHERSEL in One Ramp Mode

In One Ramp mode with DITHERSEL selecting dead-time B, the dead-time B will be increased by one cycle when dither overflow occurs, reducing on-time B by one cycle.

23.3.3.6 TCD Counter Capture

The TCD counter is asynchronous to the peripheral clock, so it is not possible to read out the counter value directly. It is possible to capture the TCD counter value, synchronized to the I/O clock domain, in two ways:

- Capture value on input events
- Software capture

The capture logic contains two separate capture blocks, CAPTUREA and CAPTUREB, that can capture and synchronize the TCD counter value to the I/O clock domain. CAPTUREA/B can be triggered by input event A/B or by software.

chanhvinh.com

The capture values can be obtained by reading first the TCDn.CAPTUREAL/TCDn.CAPTUREBL registers and then the TCDn.CAPTUREAH/TCDn.CAPTUREBH registers.

Captures Triggered by Input Events

To enable the capture on an input event, write a '1' to the ACTION bit in the respective Event Control (TCDn.EVCTRLA or TCDn.EVCTRLB) register when configuring an event input.

When a capture has occurred, the TRIGA/B flag is raised in the Interrupt Flags (TCDn.INTFLAGS) register. The corresponding TRIGA/B interrupt can be enabled by writing a '1' to the respective Trigger Interrupt Enable (TRIGA or TRIGB) bit in the Interrupt Control (TCDn.INTCTRL) register. By polling TRIGA or TRIGB in TCDn.INTFLAGS, the user knows that a CAPTURE value is available and can read out the value by reading first the TCDn.CAPTUREAL or TCDn.CAPTUREBL register and then the TCDn.CAPTUREAH or TCDn.CAPTUREBH register.

Example 23-3. PWM Capture

To perform a PWM capture, connect both event A and event B to the same asynchronous event channel that contains the PWM signal. To get information on the PWM signal, configure one event input to capture the rising edge of the signal. Configure the other event input to capture the falling edge of the signal.

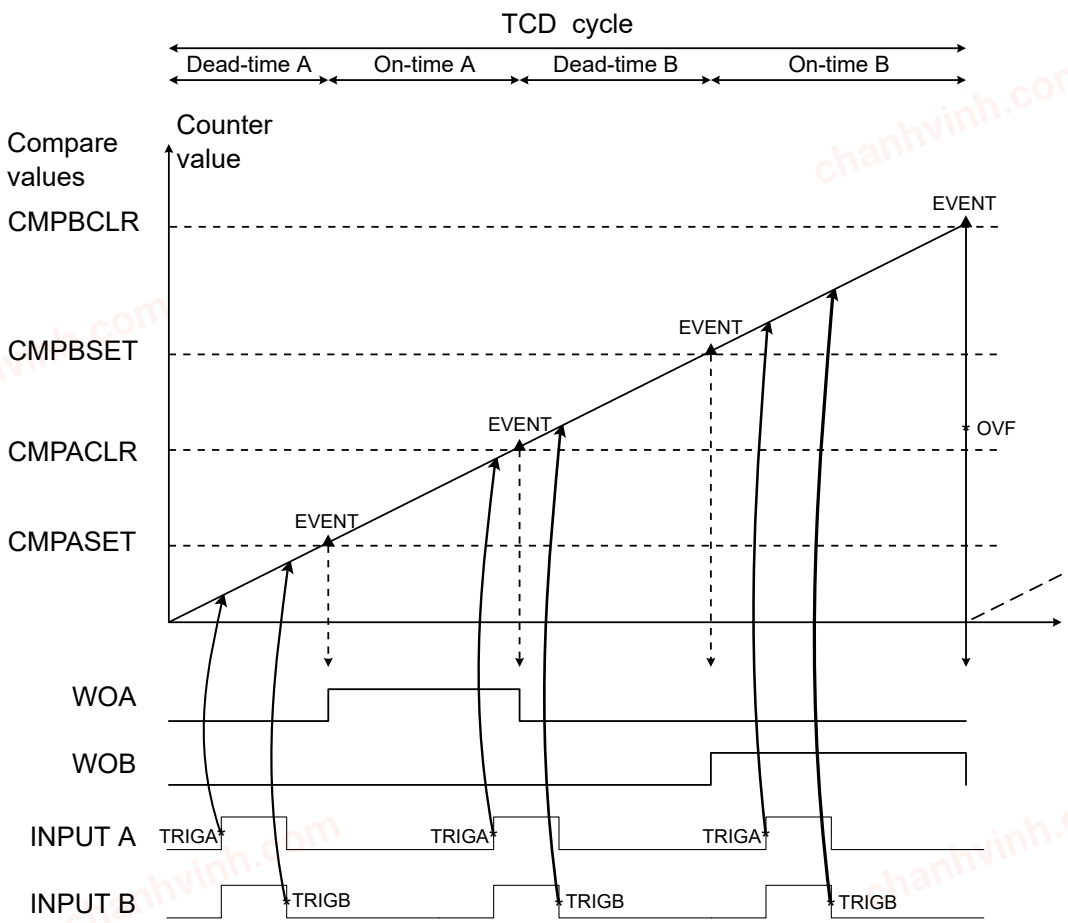

Note:

▲ Event trigger

* Interrupt trigger

chanhvinh.com

Capture Triggered by Software

The software can capture the TCD value by writing a '1' to the respective Software Capture A/B Strobe (SCAPTUREx) bit in the Control E (TCDn.CTRLE) register. When this command is executed, and the Command Ready (CMDRDY) bit in the Status (TCDn.STATUS) register reads '1' again, the CAPTUREA/B value is available. It can now be read by reading first the TCDn.CAPTUREAL or TCDn.CAPTUREBL register and then the TCDn.CAPTUREAH or the TCDn.CAPTUREBH register.

Using Capture Together with Input Modes

The capture functionality can be used together with the input modes. The same event will then both capture the counter value and trigger a change in the counter flow, depending on the input mode selected.

Example 23-4. Reset One Ramp Mode by Input Event Capture

In One Ramp mode, the counter can be reset by an input event capture. To achieve this, use input event B and write 0x08 to the INPUTMODE bit field in the Input Control B (TCDn.INPUTCTRLB) register.

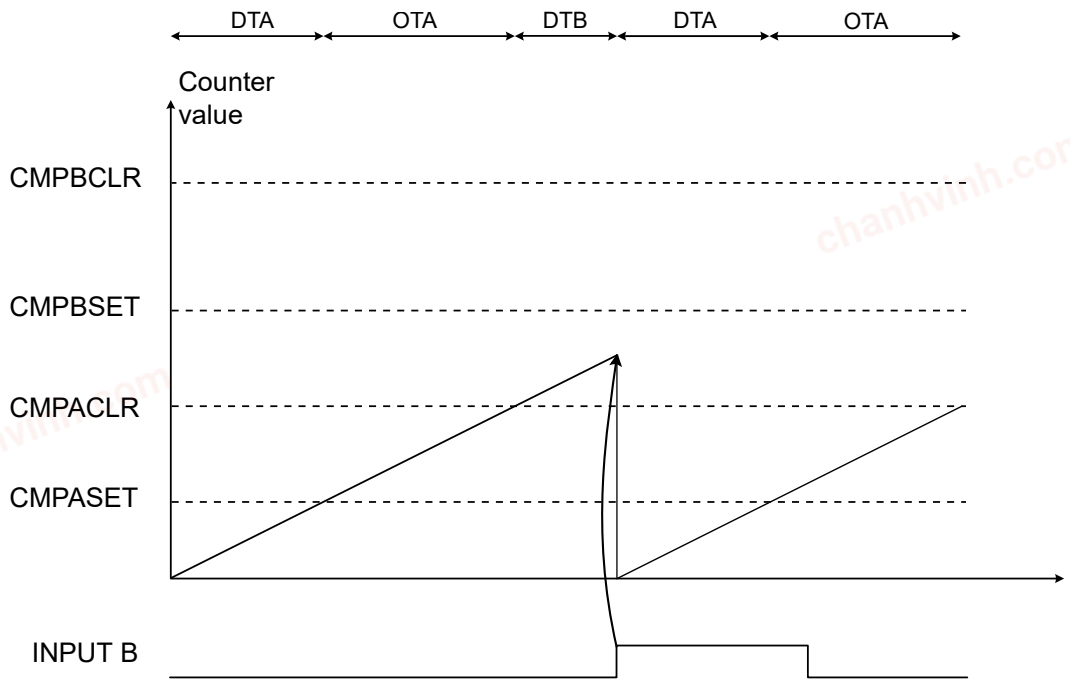

23.3.3.7 Output Control

The outputs are configured by writing to the Fault Control (TCDn.FAULTCTRL) register.

The Compare x Enable (CMPxEN) bits in TCDn.FAULTCTRL enable the different outputs. The CMPx bits in TCDn.FAULTCTRL set the output values when a Fault is triggered.

The TCD itself generates two different outputs, WOA and WOB. The two additional outputs, WOC and WOD, can be configured by software to be connected to either WOA or WOB by writing the Compare C/D Output Select (CMPCSEL and CMPDSEL) bits in the Control C (TCDn.CTRLC) register.

The user can override the outputs based on the TCD counter state by writing a '1' to the Compare Output Value Override (CMPOVR) bit in the Control C (TCDn.CTRLC) register. The user can then select the output values in the different dead and on-times by writing to the Compare Value (CMPAVAL and CMPBVAL) bit fields in the Control D (TCDn.CTRLD) register.

When used in One Ramp mode, WOA will only use the setup for Dead-Time A (DTA) and On-Time A (OTA) to set the output. WOB will only use Dead-Time B (DTB) and On-Time B (OTB) values to set the output.

When using the override feature together with Faults detection (input modes), the CMPA (and CMPC/D if WOC/D equals WOA) bit in TCDn.FAULTCTRL must be equal to CMPAVAL[0] and [2] in CTRL. If not, the first cycle after a

© 2021 Microchip Technology Inc. and its subsidiaries

chanhvinh.com

Fault is detected can have the wrong polarity on the outputs. The same applies to CMPB in the TCDn.FAULTCTRL (and CMPC/D if WOC/D equals WOB) bit, which must be equal to CMPBVAL[0] and [2] in TCDn.CTRLD.

Due to the asynchronous nature of the TCD and that input events can immediately affect the output signal, there is a risk of nanosecond spikes occurring on the output without any load on the pin. The case occurs in any input mode different from '0' and when an input event is triggering. The spike value will always be in the direction of the CMPx values given by the TCDn.FAULTCTRL register.

23.3.4 Events

The TCD can generate the events described in the following table:

Table 23-8. Event Generators in TCD

Generator Name		Description	Event Type	Generating Clock Domain	Length of Event
Peripheral	Event				
TCDn	CMPBCLR	The counter matches CMPBCLR	Pulse	CLK_TCD	One CLK_TCD_CNT period
	CMPASET	The counter matches CMPASET			
	CMPBSET	The counter matches CMPBSET			
	PROGEV	Programmable event output(1)			One CLK_TCD_SYNC period

Note:

1. The user can select the trigger and all the compare matches (including CMPACLR). Also, it is possible to delay the output event from 0 to 255 TCD delay cycles.

The three events based on the counter match directly generate event strobes that last for one clock cycle on the TCD counter clock. The programmable output event generates an event strobe that lasts for one clock cycle on the TCD synchronizer clock.

The TCD can receive the events described in the following table:

chanhvinh.com

Table 23-9. Event Users and Available Event Actions in TCD

User Name		Description	Input Detection	Async/Sync
Peripheral	Input			
TCDn	Input A/Input B	Stop the output, jump to the opposite compare cycle and wait	Level	Both
		Stop the output, execute the opposite compare cycle and wait		
		Stop the output, execute the opposite compare cycle while the Fault is active		
		Stop all outputs, maintain the frequency		
		Stop all outputs, execute dead-time while the Fault is active		
		Stop all outputs, jump to the next compare cycle and wait		
		Stop all outputs, wait for software action		
		Stop the output on the edge, jump to the next compare cycle	Edge	
		Stop the output on the edge, maintain the frequency		
		Stop the output at level, maintain the frequency	Level	

Input A and Input B are TCD event users that detect and act upon the input events. Additional information about input events and how to configure them can be found in the 23.3.3.4 TCD Inputs section. Refer to the *Event System (EVSYS)* section for more details regarding event types and Event System configuration.

23.3.4.1 Programmable Output Events

The Programmable Output Event (PROGEV) uses the same logic as the input blanking for trigger selection and delay. Therefore, it is not possible to configure functionalities independently. If the input blanking functionality is used, the output event cannot be delayed, and the trigger used for input blanking will also be used for the output event.

PROGEV is configured in the TCDn.DLYCTRL and TCDn.DLYVAL registers. It is possible to delay the output event by 0 to 255 TCD delay clock cycles. The delayed output event functionality uses the TCD delay clock and counts until the DLYVAL value is reached before the trigger is sent out as an event. The TCD delay clock is a prescaled version of the TCD synchronizer clock (CLK_TCD_SYNC), and the division factor is set by the DLYPRESC bits in the TCDn.DLYCTRL register. The output event will be delayed by the TCD clock period x DLYPRESC division factor x DLYVAL.

23.3.5 Interrupts

Table 23-10. Available Interrupt Vectors and Sources

Name	Vector Description	Conditions
OVF	Overflow interrupt	The TCD finishes one TCD cycle
TRIG	Trigger interrupt	• TRIGA: On event input A • TRIGB: On event input B

When an interrupt condition occurs, the corresponding interrupt flag is set in the Interrupt Flags (TCDn.INTFLAGS) register.

An interrupt source is enabled or disabled by writing to the corresponding enable bit in the Interrupt Control (TCDn.INTCTRL) register.

© 2021 Microchip Technology Inc. and its subsidiaries

chanhvinh.com

An interrupt request is generated when the corresponding interrupt source is enabled, and the interrupt flag is set. The interrupt request remains active until the interrupt flag is cleared. See the peripheral's INTFLAGS register for details on how to clear interrupt flags.

When several interrupt request conditions are supported by an interrupt vector, the interrupt requests are ORed together into one combined interrupt request to the interrupt controller. The user must read the peripheral's INTFLAGS register to determine which of the interrupt conditions are present.

23.3.6 Sleep Mode Operation

The TCD operates in Idle sleep mode and is stopped when entering Standby and Power-Down sleep modes.

23.3.7 Debug Operation

Halting the CPU in Debugging mode will halt the normal operation of the peripheral. This peripheral can be forced to operate with the CPU halted by writing a '1' to the Debug Run (DBGRUN) bit in the Debug Control (TCDn.DBGCTRL) register.

When the Fault Detection (FAULTDET) bit in TCDn.DBGCTRL is written to '1', and the CPU is halted in Debug mode, an event/Fault is created on both input event channels. These events/Faults last as long as the break and can serve as a safeguard in Debug mode, for example, by forcing external components off.

If the peripheral is configured to require periodic service by the CPU through interrupts or similar, improper operation or data loss may result during halted debugging.

23.3.8 Configuration Change Protection

This peripheral has registers that are under Configuration Change Protection (CCP). To write to these registers, a certain key must first be written to the CPU.CCP register, followed by a write access to the protected bits within four CPU instructions.

Attempting to write to a protected register without following the appropriate CCP unlock sequence leaves the protected register unchanged.

The following registers are under CCP:

Table 23-11. Registers under Configuration Change Protection in TCD

Register	Key
TCDn.FAULTCTRL	IOREG

chanhvinh.com

23.4 Register Summary

Offset	Name	Bit Pos.	7	6	5	4	3	2	1	0
0x00	CTRLA	7:0		CLKSEL[1:0]		CNTPRES[1:0]		SYNCPRES[1:0]		ENABLE
0x01	CTRLB	7:0							WGMODE[1:0]	
0x02	CTRLC	7:0	CMPDSEL	CMPCSEL			FIFTY		AUPDATE	CMPOVR
0x03	CTRLD	7:0	CMPBVAL[3:0]				CMPAVAL[3:0]			
0x04	CTRLE	7:0	DISEOC			SCAPTUREB	SCAPTUREA	RESTART	SYNC	SYNCEOC
0x05 ... 0x07	Reserved									
0x08	EVCTRLA	7:0	CFG[1:0]			EDGE		ACTION		TRIGEI
0x09	EVCTRLB	7:0	CFG[1:0]			EDGE		ACTION		TRIGEI
0x0A ... 0x0B	Reserved									
0x0C	INTCTRL	7:0					TRIGB	TRIGA		OVF
0x0D	INTFLAGS	7:0					TRIGB	TRIGA		OVF
0x0E	STATUS	7:0	PWMACTB	PWMACTA					CMDRDY	ENRDY
0x0F	Reserved									
0x10	INPUTCTRLA	7:0					INPUTMODE[3:0]			
0x11	INPUTCTRLB	7:0					INPUTMODE[3:0]			
0x12	FAULTCTRL	7:0	CMPDEN	CMPCEN	CMPBEN	CMPAEN	CMPD	CMPC	CMPB	CMPA
0x13	Reserved									
0x14	DLYCTRL	7:0			DLYPRESC[1:0]		DLYTRIG[1:0]		DLYSEL[1:0]	
0x15	DLYVAL	7:0	DLYVAL[7:0]							
0x16 ... 0x17	Reserved									
0x18	DITCTRL	7:0							DITHERSEL[1:0]	
0x19	DITVAL	7:0					DITHER[3:0]			
0x1A ... 0x1D	Reserved									
0x1E	DBGCTRL	7:0						FAULTDET		DBGRUN
0x1F ... 0x21	Reserved									
0x22	CAPTUREA	7:0	CAPTUREA[7:0]							
		15:8					CAPTUREA[11:8]			
0x24	CAPTUREB	7:0	CAPTUREB[7:0]							
		15:8					CAPTUREB[11:8]			
0x26 ... 0x27	Reserved									
0x28	CMPASET	7:0	CMPASET[7:0]							
		15:8					CMPASET[11:8]			
0x2A	CMPACLR	7:0	CMPACLR[7:0]							
		15:8					CMPACLR[11:8]			
0x2C	CMPBSET	7:0	CMPBSET[7:0]							
		15:8					CMPBSET[11:8]			
0x2E	CMPBCLR	7:0	CMPBCLR[7:0]							
		15:8					CMPBCLR[11:8]			

23.5 Register Description

© 2021 Microchip Technology Inc.
and its subsidiaries

chanhvinh.com

23.5.1 Control A

Name: CTRLA
Offset: 0x00
Reset: 0x00
Property: Enable-protected

Bit	7	6	5	4	3	2	1	0
		CLKSEL[1:0]		CNTPRES[1:0]		SYNCPRES[1:0]		ENABLE
Access		R/W	R/W	R/W	R/W	R/W	R/W	R/W
Reset		0	0	0	0	0	0	0

Bits 6:5 – CLKSEL[1:0] Clock Select
The Clock Select bit field selects the clock source of the TCD clock.

Value	Name	Description
0x0	OSCHF	Internal High-Frequency Oscillator
0x1	PLL	PLL
0x2	EXTCLK	External clock
0x3	CLK_PER	Peripheral clock

Bits 4:3 – CNTPRES[1:0] Counter Prescaler
The Counter Prescaler bit field selects the division factor of the TCD counter clock.

Value	Name	Description
0x0	DIV1	Division factor 1
0x1	DIV4	Division factor 4
0x2	DIV32	Division factor 32
0x3	-	Reserved

Bits 2:1 – SYNCPRES[1:0] Synchronization Prescaler
The Synchronization Prescaler bit field selects the division factor of the TCD clock.

Value	Name	Description
0x0	DIV1	Division factor 1
0x1	DIV2	Division factor 2
0x2	DIV4	Division factor 4
0x3	DIV8	Division factor 8

Bit 0 – ENABLE Enable
When writing to this bit, it will automatically be synchronized to the TCD clock domain.
This bit can be changed as long as the synchronization of this bit is not ongoing. See the Enable Ready (ENRDY) bit in the Status (TCDn.STATUS) register.
This bit is not enable-protected.

Value	Name	Description
0	NO	The TCD is disabled
1	YES	The TCD is enabled and running

© 2021 Microchip Technology Inc. and its subsidiaries

chanhvinh.com

23.5.2 Control B

Name: CTRLB
Offset: 0x01
Reset: 0x00
Property: -

Bit	7	6	5	4	3	2	1	0
							WGMODE[1:0]	
Access							R/W	R/W
Reset							0	0

Bits 1:0 – WGMODE[1:0] Waveform Generation Mode
This bit field selects the waveform generation.

Value	Name	Description
0x0	ONERAMP	One Ramp mode
0x1	TWORAMP	Two Ramp mode
0x2	FOURRAMP	Four Ramp mode
0x3	DS	Dual Slope mode

chanhvinh.com

23.5.3 Control C

Name: CTRLC
Offset: 0x02
Reset: 0x00
Property: -

Bit	7	6	5	4	3	2	1	0
	CMPDSEL	CMPCSEL			FIFTY		AUPDATE	CMPOVR
Access	R/W	R/W			R/W		R/W	R/W
Reset	0	0			0		0	0

Bit 7 – CMPDSEL Compare D Output Select
This bit selects which waveform will be connected to output D.

Value	Name	Description
0	PWMA	Waveform A
1	PWMB	Waveform B

Bit 6 – CMPCSEL Compare C Output Select
This bit selects which waveform will be connected to output C.

Value	Name	Description
0	PWMA	Waveform A
1	PWMB	Waveform B

Bit 3 – FIFTY Fifty Percent Waveform
If the two waveforms have identical characteristics, this bit can be written to '1', which will cause any values written to the TCDn.CMPBSET/TCDn.CLR register to also be written to the TCDn.CMPASET/TCDn.CLR register.

Bit 1 – AUPDATE Automatically Update
If this bit is written to '1', synchronization at the end of the TCD cycle is automatically requested after the Compare B Clear High (TCDn.CMPBCLRH) register is written.
If the fifty percent waveform is enabled by setting the FIFTY bit in this register, writing the Compare A Clear High register will also request a synchronization at the end of the TCD cycle if the AUPDATE bit is set.

Bit 0 – CMPOVR Compare Output Value Override
When this bit is written to '1', default values of the Waveform Outputs A and B are overridden by the values written in the Compare x Value in the Active state bit fields in the Control D register. See the 23.5.4 CTRLD register description for more details.

chanhvinh.com

23.5.4 Control D

Name: CTRLD
Offset: 0x03
Reset: 0x00
Property: -

Bit	7	6	5	4	3	2	1	0
	CMPBVAL[3:0]				CMPAVAL[3:0]			
Access	R/W	R/W	R/W	R/W	R/W	R/W	R/W	R/W
Reset	0	0	0	0	0	0	0	0

Bits 0:3, 4:7 – CMPVAL Compare x Value (in Active state)
This bit field sets the logical value of the PWMx signal for the corresponding states in the TCD cycle.
These settings are valid only if the Compare Output Value Override (CMPOVR) bit in the Control C (TCDn.CTRLC) register is written to '1'.

Table 23-12. Two and Four Ramp Mode

CMPxVAL	DTA	OTA	DTB	OTB
PWMA	CMPAVAL[0]	CMPAVAL[1]	CMPAVAL[2]	CMPAVAL[3]
PWMB	CMPBVAL[0]	CMPBVAL[1]	CMPBVAL[2]	CMPBVAL[3]

When used in One Ramp mode, WOA will only use the setup for Dead-Time A (DTA) and On-Time A (OTA) to set the output. WOB will only use Dead-Time B (DTB) and On-Time B (OTB) values to set the output.

Table 23-13. One Ramp Mode

CMPxVAL	DTA	OTA	DTB	OTB
PWMA	CMPAVAL[1]	CMPAVAL[0]	-	-
PWMB	-	-	CMPBVAL[3]	CMPBVAL[2]

© 2021 Microchip Technology Inc.
and its subsidiaries

chanhvinh.com

23.5.5 Control E

Name: CTRLE
Offset: 0x04
Reset: 0x00
Property: -

Bit	7	6	5	4	3	2	1	0
	DISEOC			SCAPTUREB	SCAPTUREA	RESTART	SYNC	SYNCEOC
Access	R/W			R/W	R/W	R/W	R/W	R/W
Reset	0			0	0	0	0	0

Bit 7 – DISEOC Disable at End of TCD Cycle Strobe
When this bit is written to '1', the TCD will automatically disable at the end of the TCD cycle.
Note that ENRDY in TCDn.STATUS will stay low until the TCD is disabled.
Writing to this bit only affects if there is no ongoing synchronization of the ENABLE value in TCDn.CTRLA with the TCD domain. See also the ENRDY bit in TCDn.STATUS.

Bit 4 – SCAPTUREB Software Capture B Strobe
When this bit is written to '1', a software capture to the Capture B (TCDn.CAPTUREBL/H) register is triggered as soon as synchronization to the TCD clock domain occurs.
Writing to this bit only affects if there is no ongoing synchronization of a command. See also the CMDRDY bit in TCDn.STATUS.

Bit 3 – SCAPTUREA Software Capture A Strobe
When this bit is written to '1', a software capture to the Capture A (TCDn.CAPTUREAL/H) register is triggered as soon as synchronization to the TCD clock domain occurs.
Writing to this bit only affects if there is no ongoing synchronization of a command. See also the CMDRDY bit in TCDn.STATUS.

Bit 2 – RESTART Restart Strobe
When this bit is written to '1', a restart of the TCD counter is executed as soon as this bit is synchronized to the TCD domain.
Writing to this bit only affects if there is no ongoing synchronization of a command. See also the CMDRDY bit in TCDn.STATUS.

Bit 1 – SYNC Synchronize Strobe
When this bit is written to '1', the double-buffered registers will be loaded to the TCD domain as soon as this bit is synchronized to the TCD domain.
Writing to this bit only affects if there is no ongoing synchronization of a command. See also the CMDRDY bit in TCDn.STATUS.

Bit 0 – SYNCEOC Synchronize End of TCD Cycle Strobe
When this bit is written to '1', the double-buffered registers will be loaded to the TCD domain at the end of the next TCD cycle.
Writing to this bit only affects if there is no ongoing synchronization of a command. See also the CMDRDY bit in TCDn.STATUS.

© 2021 Microchip Technology Inc. and its subsidiaries

chanhvinh.com

23.5.6 Event Control A

Name: EVCTRLA
Offset: 0x08
Reset: 0x00
Property: -

Bit	7	6	5	4	3	2	1	0
	CFG[1:0]			EDGE		ACTION		TRIGEI
Access	R/W	R/W		R/W		R/W		R/W
Reset	0	0		0		0		0

Bits 7:6 – CFG[1:0] Event Configuration
When the input capture noise canceler is activated (FILTERON), the event input is filtered. The filter function requires four successive equal valued samples of the trigger pin to change its output. Therefore, the input capture is delayed by four clock cycles when the noise canceler is enabled (FILTERON).
When the Asynchronous Event is enabled (ASYNCON), the event input will affect the output directly.

Value	Name	Description
0x0	NEITHER	Neither filter nor asynchronous event is enabled
0x1	FILTERON	Input capture noise cancellation filter enabled
0x2	ASYNCON	Asynchronous event output qualification enabled
other	-	Reserved

Bit 4 – EDGE Edge Selection
This bit is used to select the active edge or level for the event input.

Value	Name	Description
0	FALL_LOW	The falling edge or low level of the event input triggers a Capture or Fault action
1	RISE_HIGH	The rising edge or high level of the event input triggers a Capture or Fault action

Bit 2 – ACTION Event Action
This bit enables capturing on the event input. By default, the input will trigger a Fault, depending on the Input Control register's Input mode. It is also possible to trigger a capture on the event input.

Value	Name	Description
0	FAULT	Event triggers a Fault
1	CAPTURE	Event triggers a Fault and capture

Bit 0 – TRIGEI Trigger Event Input Enable
Writing this bit to '1' enables the event as the trigger for input A.

chanhvinh.com

chanhvinh.com

23.5.7 Event Control B

Name: EVCTRLB
Offset: 0x09
Reset: 0x00
Property: -

Bit	7	6	5	4	3	2	1	0
	CFG[1:0]			EDGE		ACTION		TRIGEI
Access	R/W	R/W		R/W		R/W		R/W
Reset	0	0		0		0		0

Bits 7:6 – CFG[1:0] Event Configuration
When the input capture noise canceler is activated (FILTERON), the event input is filtered. The filter function requires four successive equal valued samples of the trigger pin to change its output. Therefore, the input capture is delayed by four clock cycles when the noise canceler is enabled (FILTERON).
When the Asynchronous Event is enabled (ASYNCON), the event input will affect the output directly.

Value	Name	Description
0x0	NEITHER	Neither filter nor asynchronous event is enabled
0x1	FILTERON	Input capture noise cancellation filter enabled
0x2	ASYNCON	Asynchronous event output qualification enabled
other	-	Reserved

Bit 4 – EDGE Edge Selection
This bit is used to select the active edge or level for the event input.

Value	Name	Description
0	FALL_LOW	The falling edge or low level of the event input triggers a Capture or Fault action
1	RISE_HIGH	The rising edge or high level of the event input triggers a Capture or Fault action

Bit 2 – ACTION Event Action
This bit enables capturing on the event input. By default, the input will trigger a Fault, depending on the Input Control register's Input mode. It is also possible to trigger a capture on the event input.

Value	Name	Description
0	FAULT	Event triggers a Fault
1	CAPTURE	Event triggers a Fault and capture

Bit 0 – TRIGEI Trigger Event Input Enable
Writing this bit to '1' enables event as a trigger for input B.

chanhvinh.com

23.5.8 Interrupt Control

Name: INTCTRL
Offset: 0x0C
Reset: 0x00
Property: -

Bit	7	6	5	4	3	2	1	0
					TRIGB	TRIGA		OVF
Access					R/W	R/W		R/W
Reset					0	0		0

Bit 3 – TRIGB Trigger B Interrupt Enable
Writing this bit to '1' enables the interrupt when trigger input B is received.

Bit 2 – TRIGA Trigger A Interrupt Enable
Writing this bit to '1' enables the interrupt when trigger input A is received.

Bit 0 – OVF Counter Overflow
Writing this bit to '1' enables the restart-of-sequence interrupt or overflow interrupt.

chanhvinh.com

23.5.9 Interrupt Flags

Name: INTFLAGS
Offset: 0x0D
Reset: 0x00
Property: -

Bit	7	6	5	4	3	2	1	0
					TRIGB	TRIGA		OVF
Access					R/W	R/W		R/W
Reset					0	0		0

Bit 3 – TRIGB Trigger B Interrupt Flag
The Trigger B Interrupt (TRIGB) flag is set on a Trigger B or Capture B condition. The flag is cleared by writing a '1' to its bit location.

Bit 2 – TRIGA Trigger A Interrupt Flag
The Trigger A Interrupt (TRIGA) flag is set on a Trigger A or Capture A condition. The flag is cleared by writing a '1' to its bit location.

Bit 0 – OVF Overflow Interrupt Flag
The Overflow Flag (OVF) is set at the end of a TCD cycle. The flag is cleared by writing a '1' to its bit location.

chanhvinh.com

chanhvinh.com

23.5.10 Status

Name: STATUS
Offset: 0x0E
Reset: 0x00
Property: -

Bit	7	6	5	4	3	2	1	0
	PWMACTB	PWMACTA					CMDRDY	ENRDY
Access	R/W	R/W					R	R
Reset	0	0					0	0

Bit 7 – PWMACTB PWM Activity on B
This bit is set by hardware each time the WOB output toggles from '0' to '1' or from '1' to '0'.
This status bit must be cleared by software by writing a '1' to it before new PWM activity can be detected.

Bit 6 – PWMACTA PWM Activity on A
This bit is set by hardware each time the WOA output toggles from '0' to '1' or from '1' to '0'.
This status bit must be cleared by software by writing a '1' to it before new PWM activity can be detected.

Bit 1 – CMDRDY Command Ready
This status bit tells when a command is synced to the TCD domain, and the system is ready to receive new commands.
The following actions clear the CMDRDY bit:

1. TCDn.CTRLE SYNCEOC strobe.
2. TCDn.CTRLE SYNC strobe.
3. TCDn.CTRLE RESTART strobe.
4. TCDn.CTRLE SCAPTUREA Capture A strobe.
5. TCDn.CTRLE SCAPTUREB Capture B strobe.
6. TCDn.CTRLC AUPDATE written to '1' and writing to the TCDn.CMPBCLRH register.

Bit 0 – ENRDY Enable Ready
This status bit tells when the ENABLE value in TCDn.CTRLA is synced to the TCD domain and is ready to be written to again.
The following actions clear the ENRDY bit:

1. Writing to the ENABLE bit in TCDn.CTRLA.
2. TCDn.CTRLE DISEOC strobe.
3. Going into BREAK in an On-Chip Debugging (OCD) session while the Debug Run (DBGCTRL) bit in TCDn.DBGCTRL is '0'.

chanhvinh.com

23.5.11 Input Control A

Name: INPUTCTRLA
Offset: 0x10
Reset: 0x00
Property: -

Bit	7	6	5	4	3	2	1	0
					INPUTMODE[3:0]			
Access					R/W	R/W	R/W	R/W
Reset					0	0	0	0

Bits 3:0 – INPUTMODE[3:0] Input Mode

Value	Name	Description
0x0	NONE	The input has no action
0x1	JMPWAIT	Stop the output, jump to the opposite compare cycle, and wait
0x2	EXECWAIT	Stop the output, execute the opposite compare cycle, and wait
0x3	EXECFAULT	Stop the output, execute the opposite compare cycle while the Fault is active
0x4	FREQ	Stop all outputs, maintain the frequency
0x5	EXECDT	Stop all outputs, execute dead-time while the Fault is active
0x6	WAIT	Stop all outputs, jump to the next compare cycle, and wait
0x7	WAITSW	Stop all outputs, wait for software action
0x8	EDGETRIG	Stop the output on the edge, jump to the next compare cycle
0x9	EDGETRIGFREQ	Stop the output on the edge, maintain the frequency
0xA	LVLTRIGFREQ	Stop the output at level, maintain the frequency

© 2021 Microchip Technology Inc.
and its subsidiaries

chanhvinh.com

23.5.12 Input Control B

Name: INPUTCTRLB
Offset: 0x11
Reset: 0x00
Property: -

Bit	7	6	5	4	3	2	1	0
					INPUTMODE[3:0]			
Access					R/W	R/W	R/W	R/W
Reset					0	0	0	0

Bits 3:0 – INPUTMODE[3:0] Input Mode

Value	Name	Description
0x0	NONE	The input has no action
0x1	JMPWAIT	Stop the output, jump to the opposite compare cycle, and wait
0x2	EXECWAIT	Stop the output, execute the opposite compare cycle, and wait
0x3	EXECFAULT	Stop the output, execute the opposite compare cycle while the Fault is active
0x4	FREQ	Stop all outputs, maintain the frequency
0x5	EXECDT	Stop all outputs, execute dead-time while the Fault is active
0x6	WAIT	Stop all outputs, jump to the next compare cycle, and wait
0x7	WAITSW	Stop all outputs, wait for software action
0x8	EDGETRIG	Stop the output on the edge, jump to the next compare cycle
0x9	EDGETRIGFREQ	Stop the output on the edge, maintain the frequency
0xA	LVLTRIGFREQ	Stop the output at level, maintain the frequency

© 2021 Microchip Technology Inc.
and its subsidiaries

chanhvinh.com

23.5.13 Fault Control

Name: FAULTCTRL
Offset: 0x12
Reset: 0x00
Property: Configuration Change Protection

Bit	7	6	5	4	3	2	1	0
	CMPDEN	CMPCEN	CMPBEN	CMPAEN	CMPD	CMPC	CMPB	CMPA
Access	R/W	R/W	R/W	R/W	R/W	R/W	R/W	R/W
Reset	0	0	0	0	0	0	0	0

Bits 4, 5, 6, 7 – CMPEN Compare Enable
These bits enable the waveform from compare as the output on the pin.

Bits 0, 1, 2, 3 – CMP Compare Value
These bits set the default state of the compare waveform output.

chanhvinh.com

23.5.14 Delay Control

Name: DLYCTRL
Offset: 0x14
Reset: 0x00
Property: -

Bit	7	6	5	4	3	2	1	0
			DLYPRESC[1:0]		DLYTRIG[1:0]		DLYSEL[1:0]	
Access			R/W	R/W	R/W	R/W	R/W	R/W
Reset			0	0	0	0	0	0

Bits 5:4 – DLYPRESC[1:0] Delay Prescaler
This bit field controls the prescaler settings for the blanking or output event delay.

Value	Name	Description
0x0	DIV1	Prescaler division factor 1
0x1	DIV2	Prescaler division factor 2
0x2	DIV4	Prescaler division factor 4
0x3	DIV8	Prescaler division factor 8

Bits 3:2 – DLYTRIG[1:0] Delay Trigger
This bit field controls the trigger of the blanking, or output event delay.

Value	Name	Description
0x0	CMPASET	CMPASET triggers delay
0x1	CMPACLR	CMPACLR triggers delay
0x2	CMPBSET	CMPBSET triggers delay
0x3	CMPBCLR	CMPASET triggers delay (end of cycle)

Bits 1:0 – DLYSEL[1:0] Delay Select
This bit field controls what function must be used by the delay trigger, the blanking or output event delay.

Value	Name	Description
0x0	OFF	Delay functionality not used
0x1	INBLANK	Input blanking enabled
0x2	EVENT	Event delay enabled
0x3	-	Reserved

© 2021 Microchip Technology Inc.
and its subsidiaries

chanhvinh.com

23.5.15 Delay Value

Name: DLYVAL
Offset: 0x15
Reset: 0x00
Property: -

Bit	7	6	5	4	3	2	1	0
	DLYVAL[7:0]							
Access	R/W	R/W	R/W	R/W	R/W	R/W	R/W	R/W
Reset	0	0	0	0	0	0	0	0

Bits 7:0 – DLYVAL[7:0] Delay Value
This bit field configures the blanking/output event delay time or event output synchronization delay in several prescaled TCD cycles.

chanhvinh.com

23.5.16 Dither Control

Name: DITCTRL
Offset: 0x18
Reset: 0x00
Property: -

Bit	7	6	5	4	3	2	1	0
							DITHERSEL[1:0]	
Access							R/W	R/W
Reset							0	0

Bits 1:0 – DITHERSEL[1:0] Dither Select
This bit field selects which state of the TCD cycle will benefit from the dither function. See the 23.3.3.5 Dithering section.

Value	Name	Description
0x0	ONTIMEB	On-time ramp B
0x1	ONTIMEAB	On-time ramp A and B
0x2	DEADTIMEB	Dead-time ramp B
0x3	DEADTIMEAB	Dead-time ramp A and B

© 2021 Microchip Technology Inc.
and its subsidiaries

chanhvinh.com

23.5.17 Dither Value

Name: DITVAL
Offset: 0x19
Reset: 0x00
Property: -

Bit	7	6	5	4	3	2	1	0
					DITHER[3:0]			
Access					R/W	R/W	R/W	R/W
Reset					0	0	0	0

Bits 3:0 – DITHER[3:0] Dither Value
This bit field configures the fractional adjustment of the on-time or off-time, according to the Dither Selection (DITHERSEL) bit field in the Dither Control (TCDn.DITCTRL) register. The DITHER value is added to a 4-bit accumulator at the end of each TCD cycle. When the accumulator overflows, the frequency adjustment will occur. The DITHER bit field is double-buffered, so the new value is copied when an update condition occurs.

chanhvinh.com

chanhvinh.com

23.5.18 Debug Control

Name: DBGCTRL
Offset: 0x1E
Reset: 0x00
Property: -

Bit	7	6	5	4	3	2	1	0
						FAULTDET		DBGRUN
Access						R/W		R/W
Reset						0		0

Bit 2 – FAULTDET Fault Detection
This bit defines how the peripheral behaves when stopped in Debug mode.

Value	Name	Description
0	NONE	No Fault is generated if the TCD is stopped in Debug mode
1	FAULT	A Fault is generated, and both trigger flags are set if the TCD is halted in Debug mode

Bit 0 – DBGRUN Debug Run
When written to '1', the peripheral will continue operating in Debug mode when the CPU is halted.

Value	Description
0	The peripheral is halted in Break Debug mode and ignores events
1	The peripheral will continue to run in Break Debug mode when the CPU is halted

© 2021 Microchip Technology Inc.
and its subsidiaries

chanhvinh.com

23.5.19 Capture A

Name: CAPTUREA
Offset: 0x22
Reset: 0x00
Property: -

The TCDn.CAPTUREAL and TCDn.CAPTUREAH register pair represents the 12-bit TCDn.CAPTUREA value.

For capture operation, these registers constitute the second buffer level and access point for the CPU. The TCDn.CAPTUREA registers are updated with the buffer value when an update condition occurs. The CAPTURE A register contains the TCD counter value when trigger A or software capture A occurs.

The TCD counter value is synchronized to CAPTUREA by either software or an event.

The capture register is blocked for an update of new capture data until the higher byte of this register is read.

Bit	15	14	13	12	11	10	9	8
					CAPTUREA[11:8]			
Access					R	R	R	R
Reset					0	0	0	0

Bit	7	6	5	4	3	2	1	0
	CAPTUREA[7:0]							
Access	R	R	R	R	R	R	R	R
Reset	0	0	0	0	0	0	0	0

Bits 11:0 – CAPTUREA[11:0] Capture A Value

chanhvinh.com

23.5.20 Capture B

Name: CAPTUREB
Offset: 0x24
Reset: 0x00
Property: -

The TCDn.CAPTUREBL and TCDn.CAPTUREBH register pair represents the 12-bit TCDn.CAPTUREB value.

For capture operation, these registers constitute the second buffer level and access point for the CPU. The TCDn.CAPTUREB registers are updated with the buffer value when an update condition occurs. The CAPTURE B register contains the TCD counter value when trigger B or software capture B occurs.

The TCD counter value is synchronized to CAPTUREB by either software or an event.

The capture register is blocked for an update of new capture data until the higher byte of this register is read.

Bit	15	14	13	12	11	10	9	8
					CAPTUREB[11:8]			
Access					R	R	R	R
Reset					0	0	0	0

Bit	7	6	5	4	3	2	1	0
	CAPTUREB[7:0]							
Access	R	R	R	R	R	R	R	R
Reset	0	0	0	0	0	0	0	0

Bits 11:0 – CAPTUREB[11:0] Capture B Value

chanhvinh.com

23.5.21 Compare Set A

Name: CMPASET
Offset: 0x28
Reset: 0x00
Property: -

The TCDn.CMPASETL and TCDn.CMPASETH register pair represents the 12-bit TCDn.CMPASET value. This register is continuously compared to the counter value. Then, the outputs from the comparators are used for generating waveforms.

Bit	15	14	13	12	11	10	9	8
					CMPASET[11:8]			
Access					R/W	R/W	R/W	R/W
Reset					0	0	0	0

Bit	7	6	5	4	3	2	1	0
	CMPASET[7:0]							
Access	R/W	R/W	R/W	R/W	R/W	R/W	R/W	R/W
Reset	0	0	0	0	0	0	0	0

Bits 11:0 – CMPASET[11:0] Compare A Set
This bit field holds the value of the compare register.

chanhvinh.com

23.5.22 Compare Set B

Name: CMPBSET
Offset: 0x2C
Reset: 0x00
Property: -

The TCDn.CMPBSETL and TCDn.CMPBSETH register pair represents the 12-bit TCDn.CMPBSET value. This register is continuously compared to the counter value. Then, the outputs from the comparators are used for generating waveforms.

Bit	15	14	13	12	11	10	9	8
					CMPBSET[11:8]			
Access					R/W	R/W	R/W	R/W
Reset					0	0	0	0

Bit	7	6	5	4	3	2	1	0
	CMPBSET[7:0]							
Access	R/W	R/W	R/W	R/W	R/W	R/W	R/W	R/W
Reset	0	0	0	0	0	0	0	0

Bits 11:0 – CMPBSET[11:0] Compare B Set
This bit field holds the value of the compare register.

chanhvinh.com

23.5.23 Compare Clear A

Name: CMPACLR
Offset: 0x2A
Reset: 0x00
Property: -

The TCDn.CMPACLRL and TCDn.CMPACLRH register pair represents the 12-bit TCDn.CMPACLR value. This register is continuously compared to the counter value. Then, the outputs from the comparators are used for generating waveforms.

Bit	15	14	13	12	11	10	9	8
					CMPACLR[11:8]			
Access					R/W	R/W	R/W	R/W
Reset					0	0	0	0

Bit	7	6	5	4	3	2	1	0
	CMPACLR[7:0]							
Access	R/W	R/W	R/W	R/W	R/W	R/W	R/W	R/W
Reset	0	0	0	0	0	0	0	0

Bits 11:0 – CMPACLR[11:0] Compare A Clear
This bit field holds the value of the compare register.

chanhvinh.com

23.5.24 Compare Clear B

Name: CMPBCLR
Offset: 0x2E
Reset: 0x00
Property: -

The TCDn.CMPBCLRL and TCDn.CMPBCLRH register pair represents the 12-bit TCDn.CMPBCLR value. This register is continuously compared to the counter value. Then, the outputs from the comparators are used for generating waveforms.

Bit	15	14	13	12	11	10	9	8
					CMPBCLR[11:8]			
Access					R/W	R/W	R/W	R/W
Reset					0	0	0	0

Bit	7	6	5	4	3	2	1	0
	CMPBCLR[7:0]							
Access	R/W	R/W	R/W	R/W	R/W	R/W	R/W	R/W
Reset	0	0	0	0	0	0	0	0

Bits 11:0 – CMPBCLR[11:0] Compare B Clear
This bit field holds the value of the compare register.

chanhvinh.com

24. RTC - Real-Time Counter

24.1 Features

- 16-bit Resolution
- Selectable Clock Sources
- Programmable 15-bit Clock Prescaling
- One Compare Register
- One Period Register
- Clear Timer on Period Overflow
- Optional Interrupt/Event on Overflow and Compare Match
- Periodic Interrupt and Event
- Crystal Error Correction

24.2 Overview

The RTC peripheral offers two timing functions: The Real-Time Counter (RTC) and a Periodic Interrupt Timer (PIT).

The PIT functionality can be enabled independently of the RTC functionality.

RTC - Real-Time Counter

The RTC counts (prescaled) clock cycles in a Counter register and compares the content of the Counter register to a Period register and a Compare register.

The RTC can generate both interrupts and events on compare match or overflow. It will generate a compare interrupt and/or event at the first count after the counter value equals the Compare register value, and an overflow interrupt and/or event at the first count after the counter value equals the Period register value. The overflow will reset the counter value to zero.

The RTC peripheral typically runs continuously, including in Low-Power sleep modes, to keep track of time. It can wake up the device from sleep modes, and/or interrupt the device at regular intervals.

The reference clock is typically the 32.768 kHz output from an external crystal. The RTC can also be clocked from an external clock signal, the 32.768 kHz Internal Oscillator (OSC32K), or the OSC32K divided by 32.

The RTC peripheral includes a 15-bit programmable prescaler that can scale down the reference clock before it reaches the counter. A wide range of resolutions and time-out periods can be configured for the RTC. With a 32.768 kHz clock source, the maximum resolution is 30.5 µs, and time-out periods can be up to two seconds. With a resolution of 1s, the maximum time-out period is more than 18 hours (65536 seconds).

The RTC also supports crystal error correction when operated using external crystal selection. An externally calibrated value will be used for correction. The RTC can be adjusted by software with an accuracy of ±1 PPM, and the maximum adjustment is ±127 PPM. The RTC correction operation will either speed up (by skipping count) or slow down (by adding extra count) the prescaler to account for the crystal error.

PIT - Periodic Interrupt Timer

The PIT uses the same clock source (CLK_RTC) as the RTC function and can generate an interrupt request or a level event on every n^{th} clock period. The n can be selected from {4, 8, 16,... 32768} for interrupts, and from {64, 128, 256,... 8192} for events.

© 2021 Microchip Technology Inc.
and its subsidiaries

chanhvinh.com

24.2.1 Block Diagram

Figure 24-1. Block Diagram

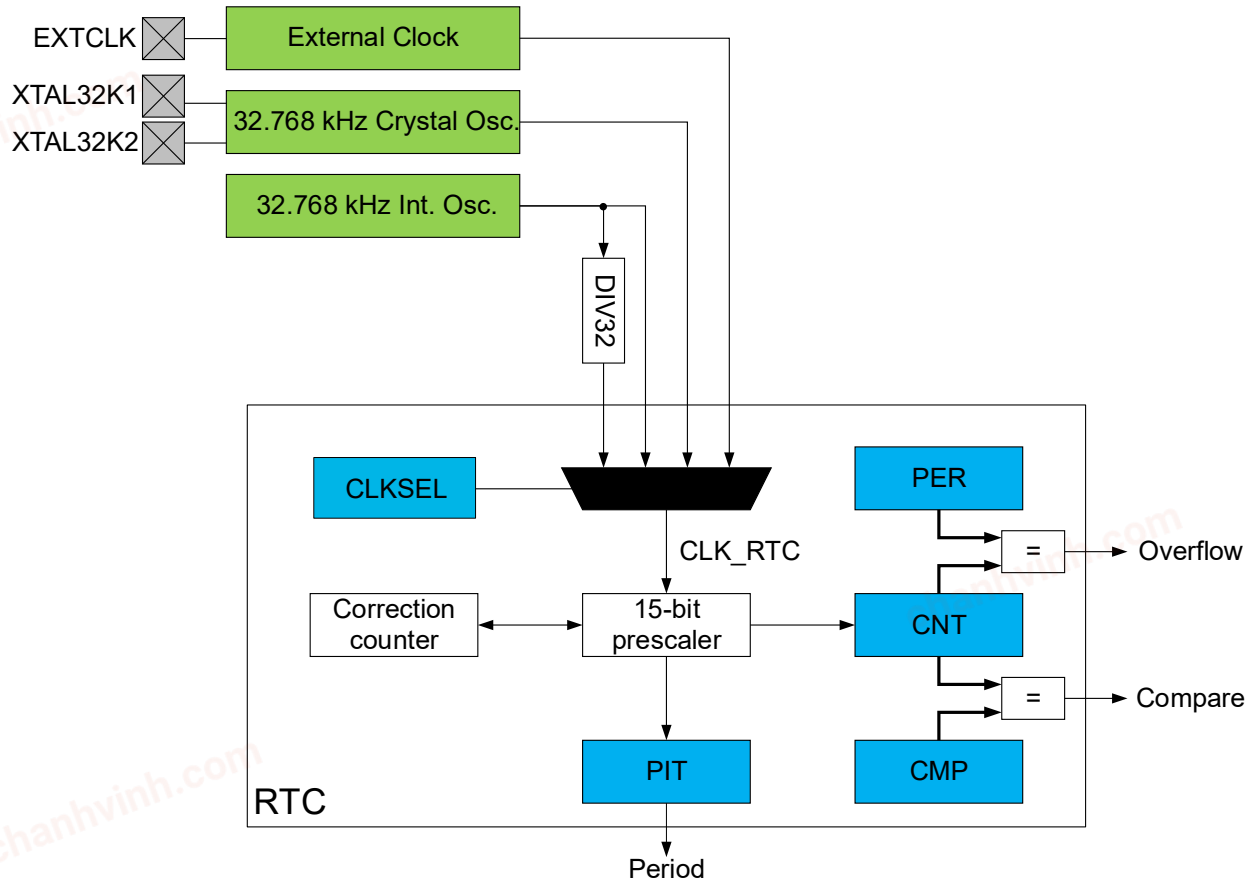

24.3 Clocks

The peripheral clock (CLK_PER) is required to be at least four times faster than the RTC clock (CLK_RTC) for reading the counter value, regardless of the prescaler setting.

A 32.768 kHz crystal can be connected to the XTAL32K1 or XTAL32K2 pins, along with any required load capacitors. Alternatively, an external digital clock can be connected to the XTAL32K1 pin.

24.4 RTC Functional Description

The RTC peripheral offers two timing functions: The Real-Time Counter (RTC) and a Periodic Interrupt Timer (PIT). This subsection describes the RTC.

24.4.1 Initialization

Before enabling the RTC peripheral and the desired actions (interrupt requests and output events), the source clock for the RTC counter must be configured to operate the RTC.

24.4.1.1 Configure the Clock CLK_RTC

To configure the CLK_RTC, follow these steps:

1. Configure the desired oscillator to operate as required, in the Clock Controller (CLKCTRL) peripheral.
2. Write the Clock Select (CLKSEL) bit field in the Clock Selection (RTC.CLKSEL) register accordingly.

chanhvinh.com

The CLK_RTC clock configuration is used by both RTC and PIT functionalities.

24.4.1.2 Configure RTC

To operate the RTC, follow these steps:

1. Set the compare value in the Compare (RTC.CMP) register, and/or the overflow value in the Period (RTC.PER) register.
2. Enable the desired interrupts by writing to the respective interrupt enable bits (CMP, OVF) in the Interrupt Control (RTC.INTCTRL) register.
3. Configure the RTC internal prescaler by writing the desired value to the Prescaler (PRESCALER) bit field in the Control A (RTC.CTRLA) register.
4. Enable the RTC by writing a '1' to the RTC Peripheral Enable (RTCEN) bit in the RTC.CTRLA register.

24.4.2 Operation - RTC

24.4.2.1 Enabling and Disabling

The RTC is enabled by writing the RTC Peripheral Enable (RTCEN) bit in the Control A (RTC.CTRLA) register to '1'. The RTC is disabled by writing the RTC Peripheral Enable (RTCEN) bit in RTC.CTRLA to '0'.

24.5 PIT Functional Description

The RTC peripheral offers two timing functions: The Real-Time Counter (RTC) and a Periodic Interrupt Timer (PIT). This subsection describes the PIT.

24.5.1 Initialization

To operate the PIT, follow these steps:

1. Configure the RTC clock CLK_RTC as described in section 24.4.1.1 Configure the Clock CLK_RTC.
2. Enable the interrupt by writing a '1' to the Periodic Interrupt (PI) bit in the PIT Interrupt Control (RTC.PITINTCTRL) register.
3. Select the period for the interrupt by writing the desired value to the Period (PERIOD) bit field in the Periodic Interrupt Timer Control A (RTC.PITCTRLA) register.
4. Enable the PIT by writing a '1' to the Periodic Interrupt Timer Enable (PITEN) bit in the RTC.PITCTRLA register.

24.5.2 Operation - PIT

24.5.2.1 Enabling and Disabling

The PIT is enabled by writing the Periodic Interrupt Timer Enable (PITEN) bit in the Periodic Interrupt Timer Control A (RTC.PITCTRLA) register to '1'. The PIT is disabled by writing the Periodic Interrupt Timer Enable (PITEN) bit in RTC.PITCTRLA to '0'.

24.5.2.2 PIT Interrupt Timing

Timing of the First Interrupt

Both PIT and RTC functions are running from the same counter inside the prescaler and can be configured as described below:

- The RTC interrupt period is configured by writing the Period (RTC.PER) register
- The PIT interrupt period is configured by writing the Period (PERIOD) bit field in Periodic Interrupt Timer Control A (RTC.PITCTRLA) register

The prescaler is OFF when both functions are OFF (RTC Peripheral Enable (RTCEN) bit in RTC.CTRLA and the Periodic Interrupt Timer Enable (PITEN) bit in RTC.PITCTRLA are '0'), but it is running (that is, its internal counter is counting) when either function is enabled. For this reason, the timing of the first PIT interrupt and the first RTC count tick will be unknown (anytime between enabling and a full period).

© 2021 Microchip Technology Inc. and its subsidiaries

chanhvinh.com

Continuous Operation

After the first interrupt, the PIT will continue toggling every ½ PIT period resulting in a full PIT period signal.

chanhvinh.com

chanhvinh.com

Example 24-1. PIT Timing Diagram for PERIOD = CYC16

For PERIOD = CYC16 in RTC.PITCTRLA, the PIT output effectively follows the state of the prescaler counter bit 3, so the resulting interrupt output has a period of 16 CLK_RTC cycles.

The time between writing PITEN to '1' and the first PIT interrupt can vary between virtually zero and a full PIT period of 16 CLK_RTC cycles. The precise delay between enabling the PIT and its first output depends on the prescaler's counting phase: The first interrupt shown below is produced by writing PITEN to '1' at any time inside the leading time window.

Figure 24-2. Timing Between PIT Enable and First Interrupt

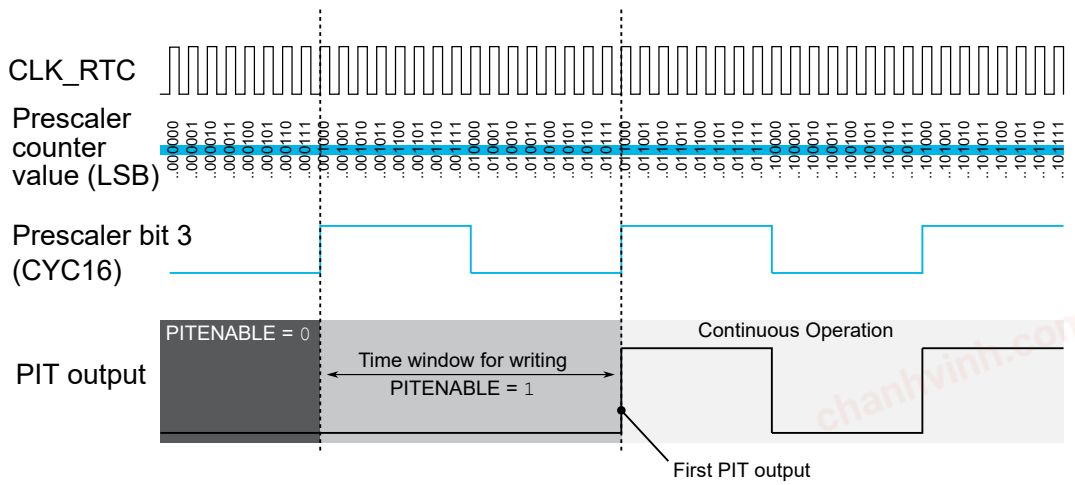

24.6 Crystal Error Correction

The prescaler for the RTC and PIT can do internal frequency correction of the crystal clock by using the PPM error value from the Crystal Frequency Calibration (CALIB) register when the Frequency Correction Enable (CORREN) bit in the RTC.CTRLA register is '1'.

The CALIB register must be written by the user, based on the information about the frequency error. The correction operation is performed by adding or removing a number of cycles equal to the value given in the Error Correction Value (ERROR) bit field in the CALIB register spread throughout a million-cycle interval.

The correction of the clock will be reflected in the RTC count value available through the Count (RTC.CNT) registers or in the PIT intervals.

If disabling the correction feature, an ongoing correction cycle will be completed before the function is disabled.

Note: If using this feature with a negative correction, the minimum prescaler configuration is DIV2.

24.7 Events

The RTC can generate the events described in the following table:

chanhvinh.com

Table 24-1. RTC Event Generators

Generator Name		Description	Event Type	Clock Domain	Length of the Event
Module	Event				
RTC	OVF	Overflow	Pulse	CLK_RTC	One CLK_RTC period
	CMP	Compare Match			One CLK_RTC period
	PIT_DIV8192	Prescaled RTC clock divided by 8192	Level		Given by prescaled RTC clock divided by 8192
	PIT_DIV4096	Prescaled RTC clock divided by 4096			Given by prescaled RTC clock divided by 4096
	PIT_DIV2048	Prescaled RTC clock divided by 2048			Given by prescaled RTC clock divided by 2048
	PIT_DIV1024	Prescaled RTC clock divided by 1024			Given by prescaled RTC clock divided by 1024
	PIT_DIV512	Prescaled RTC clock divided by 512			Given by prescaled RTC clock divided by 512
	PIT_DIV256	Prescaled RTC clock divided by 256			Given by prescaled RTC clock divided by 256
	PIT_DIV128	Prescaled RTC clock divided by 128			Given by prescaled RTC clock divided by 128
	PIT_DIV64	Prescaled RTC clock divided by 64			Given by prescaled RTC clock divided by 64

The conditions for generating the OVF and CMP events are identical to those that will raise the corresponding interrupt flags in the RTC.INTFLAGS register.

Refer to the *Event System (EVSYS)* section for more details regarding event users and Event System configuration.

24.8 Interrupts

Table 24-2. Available Interrupt Vectors and Sources

Name	Vector Description	Conditions
RTC	Real-Time Counter overflow and compare match interrupt	• Overflow (OVF): The counter has reached the value from the RTC.PER register and wrapped to zero • Compare (CMP): Match between the value from the Counter (RTC.CNT) register and the value from the Compare (RTC.CMP) register
PIT	Periodic Interrupt Timer interrupt	A time period has passed, as configured by the PERIOD bit field in RTC.PITCTRLA

When an interrupt condition occurs, the corresponding interrupt flag is set in the peripheral's Interrupt Flags (*peripheral*.INTFLAGS) register.

An interrupt source is enabled or disabled by writing to the corresponding enable bit in the peripheral's Interrupt Control (*peripheral*.INTCTRL) register.

An interrupt request is generated when the corresponding interrupt source is enabled, and the interrupt flag is set. The interrupt request remains active until the interrupt flag is cleared. See the peripheral's INTFLAGS register for details on how to clear interrupt flags.

© 2021 Microchip Technology Inc. and its subsidiaries

chanhvinh.com

Note that:

- The RTC has two INTFLAGS registers: RTC.INTFLAGS and RTC.PITINTFLAGS.
- The RTC has two INTCTRL registers: RTC.INTCTRL and RTC.PITINTCTRL.

24.9 Sleep Mode Operation

The RTC will continue to operate in Idle sleep mode. It will run in Standby sleep mode if the Run in Standby (RUNSTDBY) bit in RTC.CTRLA is set.

The PIT will continue to operate in any sleep mode.

24.10 Synchronization

Both the RTC and the PIT are asynchronous, operating from a different clock source (CLK_RTC) independently of the peripheral clock (CLK_PER). For Control and Count register updates, it will take some RTC and/or peripheral clock cycles before an updated register value is available in a register or until a configuration change affects the RTC or PIT, respectively. This synchronization time is described for each register in the *Register Description* section.

For some RTC registers, a Synchronization Busy (CMPBUSY, PERBUSY, CNTBUSY, CTRLABUSY) flag is available in the Status (RTC.STATUS) register.

For the RTC.PITCTRLA register, a Synchronization Busy (CTRLBUSY) flag is available in the Periodic Interrupt Timer Status (RTC.PITSTATUS) register.

Check these flags before writing to the mentioned registers.

24.11 Debug Operation

If the Debug Run (DBGRUN) bit in the Debug Control (RTC.DBGCTRL) register is '1', the RTC will continue normal operation. If DBGRUN is '0' and the CPU is halted, the RTC will halt the operation and ignore any incoming events.

If the Debug Run (DBGRUN) bit in the Periodic Interrupt Timer Debug Control (RTC.PITDBGCTRL) register is '1', the PIT will continue normal operation. If DBGRUN is '0' in the Debug mode and the CPU is halted, the PIT output will be low. When the PIT output is high at the time, a new positive edge occurs to set the interrupt flag when restarting from a break. The result is an additional PIT interrupt that does not happen during normal operation. If the PIT output is low at the break, the PIT will resume low without additional interrupt.

© 2021 Microchip Technology Inc.
and its subsidiaries

chanhvinh.com

24.12 Register Summary

Offset	Name	Bit Pos.	7	6	5	4	3	2	1	0
0x00	CTRLA	7:0	RUNSTDBY	PRESCALER[3:0]				CORREN		RTCEN
0x01	STATUS	7:0					CMPBUSY	PERBUSY	CNTBUSY	CTRLABUSY
0x02	INTCTRL	7:0							CMP	OVF
0x03	INTFLAGS	7:0							CMP	OVF
0x04	TEMP	7:0	TEMP[7:0]							
0x05	DBGCTRL	7:0								DBGRUN
0x06	CALIB	7:0	SIGN	ERROR[6:0]						
0x07	CLKSEL	7:0							CLKSEL[1:0]	
0x08	CNT	7:0	CNT[7:0]							
		15:8	CNT[15:8]							
0x0A	PER	7:0	PER[7:0]							
		15:8	PER[15:8]							
0x0C	CMP	7:0	CMP[7:0]							
		15:8	CMP[15:8]							
0x0E ... 0x0F	Reserved									
0x10	PITCTRLA	7:0		PERIOD[3:0]						PITEN
0x11	PITSTATUS	7:0								CTRLBUSY
0x12	PITINTCTRL	7:0								PI
0x13	PITINTFLAGS	7:0								PI
0x14	Reserved									
0x15	PITDBGCTRL	7:0								DBGRUN

24.13 Register Description

chanhvinh.com

chanhvinh.com

24.13.1 Control A

Name: CTRLA
Offset: 0x00
Reset: 0x00
Property: -

Bit	7	6	5	4	3	2	1	0
	RUNSTDBY	PRESCALER[3:0]				CORREN		RTCEN
Access	R/W	R/W	R/W	R/W	R/W	R/W		R/W
Reset	0	0	0	0	0	0		0

Bit 7 – RUNSTDBY Run in Standby

Value	Description
0	RTC disabled in Standby sleep mode
1	RTC enabled in Standby sleep mode

Bits 6:3 – PRESCALER[3:0] Prescaler
These bits define the prescaling of the CLK_RTC clock signal. Due to synchronization between the RTC clock and the peripheral clock, there is a latency of two RTC clock cycles from updating the register until this has an effect. Application software needs to check that the CTRLABUSY flag in the RTC.STATUS register is cleared before writing to this register.

Value	Name	Description
0x0	DIV1	RTC clock/1 (no prescaling)
0x1	DIV2	RTC clock/2
0x2	DIV4	RTC clock/4
0x3	DIV8	RTC clock/8
0x4	DIV16	RTC clock/16
0x5	DIV32	RTC clock/32
0x6	DIV64	RTC clock/64
0x7	DIV128	RTC clock/128
0x8	DIV256	RTC clock/256
0x9	DIV512	RTC clock/512
0xA	DIV1024	RTC clock/1024
0xB	DIV2048	RTC clock/2048
0xC	DIV4096	RTC clock/4096
0xD	DIV8192	RTC clock/8192
0xE	DIV16384	RTC clock/16384
0xF	DIV32768	RTC clock/32768

Bit 2 – CORREN Frequency Correction Enable

Value	Description
0	Frequency correction is disabled
1	Frequency correction is enabled

Bit 0 – RTCEN RTC Peripheral Enable

Value	Description
0	RTC peripheral is disabled
1	RTC peripheral is enabled

chanhvinh.com

24.13.2 Status

Name: STATUS
Offset: 0x01
Reset: 0x00
Property: -

Bit	7	6	5	4	3	2	1	0
					CMPBUSY	PERBUSY	CNTBUSY	CTRLABUSY
Access					R	R	R	R
Reset					0	0	0	0

Bit 3 – CMPBUSY Compare Synchronization Busy
This bit is '1' when the RTC is busy synchronizing the Compare (RTC.CMP) register in the RTC clock domain.

Bit 2 – PERBUSY Period Synchronization Busy
This bit is '1' when the RTC is busy synchronizing the Period (RTC.PER) register in the RTC clock domain.

Bit 1 – CNTBUSY Counter Synchronization Busy
This bit is '1' when the RTC is busy synchronizing the Count (RTC.CNT) register in the RTC clock domain.

Bit 0 – CTRLABUSY Control A Synchronization Busy
This bit is '1' when the RTC is busy synchronizing the Control A (RTC.CTRLA) register in the RTC clock domain.

© 2021 Microchip Technology Inc.
and its subsidiaries

chanhvinh.com

24.13.3 Interrupt Control

Name: INTCTRL
Offset: 0x02
Reset: 0x00
Property: -

Bit	7	6	5	4	3	2	1	0
							CMP	OVF
Access							R/W	R/W
Reset							0	0

Bit 1 – CMP Compare Match Interrupt Enable
Enable interrupt-on-compare match (that is, when the value from the Count (RTC.CNT) register matches the value from the Compare (RTC.CMP) register).

Value	Description
0	The compare match interrupt is disabled
1	The compare match interrupt is enabled

Bit 0 – OVF Overflow Interrupt Enable
Enable interrupt-on-counter overflow (that is, when the value from the Count (RTC.CNT) register matched the value from the Period (RTC.PER) register and wraps around to zero).

Value	Description
0	The overflow interrupt is disabled
1	The overflow interrupt is enabled

chanhvinh.com

24.13.4 Interrupt Flag

Name: INTFLAGS
Offset: 0x03
Reset: 0x00
Property: -

Bit	7	6	5	4	3	2	1	0
							CMP	OVF
Access							R/W	R/W
Reset							0	0

Bit 1 – CMP Compare Match Interrupt Flag
This flag is set when the value from the Count (RTC.CNT) register matches the value from the Compare (RTC.CMP) register.
Writing a '1' to this bit clears the flag.

Bit 0 – OVF Overflow Interrupt Flag
This flag is set when the value from the Count (RTC.CNT) register has reached the value from the Period (RTC.PER) register and wrapped to zero.
Writing a '1' to this bit clears the flag.

chanhvinh.com

24.13.5 Temporary

Name: TEMP
Offset: 0x4
Reset: 0x00
Property: -

The Temporary register is used by the CPU for 16-bit single-cycle access to the 16-bit registers of this peripheral. The register is common for all the 16-bit registers of this peripheral and can be read and written by software. For more details on reading and writing 16-bit registers, refer to *Accessing 16-Bit Registers* in the *Memories* section.

Bit	7	6	5	4	3	2	1	0
	TEMP[7:0]							
Access	R/W	R/W	R/W	R/W	R/W	R/W	R/W	R/W
Reset	0	0	0	0	0	0	0	0

Bits 7:0 – TEMP[7:0] Temporary
Temporary register for read/write operations in 16-bit registers.

chanhvinh.com

24.13.6 Debug Control

Name: DBGCTRL
Offset: 0x05
Reset: 0x00
Property: -

Bit	7	6	5	4	3	2	1	0
								DBGRUN
Access								R/W
Reset								0

Bit 0 – DBGRUN Debug Run

Value	Description
0	The peripheral is halted in Break Debug mode and ignores events
1	The peripheral will continue to run in Break Debug mode when the CPU is halted

chanhvinh.com

24.13.7 Crystal Frequency Calibration

Name: CALIB
Offset: 0x06
Reset: 0x00
Property: -

This register stores the error value and the type of correction to be done. The register is written by software with an error value based on external calibration and/or temperature correction/s.

Bit	7	6	5	4	3	2	1	0
	SIGN	ERROR[6:0]						
Access	R/W	R/W	R/W	R/W	R/W	R/W	R/W	R/W
Reset	0	0	0	0	0	0	0	0

Bit 7 – SIGN Error Correction Sign Bit
This bit shows the direction of the correction.

Value	Description
0x0	Positive correction causing the prescaler to count slower
0x1	Negative correction causing the prescaler to count faster. This requires that the minimum prescaler configuration is DIV2

Bits 6:0 – ERROR[6:0] Error Correction Value
The number of correction clocks for each million RTC clock cycles interval (PPM).

chanhvinh.com

chanhvinh.com

24.13.8 Clock Selection

Name: CLKSEL
Offset: 0x07
Reset: 0x00
Property: -

Bit	7	6	5	4	3	2	1	0
							CLKSEL[1:0]	
Access							R/W	R/W
Reset							0	0

Bits 1:0 – CLKSEL[1:0] Clock Select
Writing these bits select the source for the RTC clock (CLK_RTC).

Value	Name	Description
0x00	OSC32K	32.768 kHz from OSC32K
0x01	OSC1K	1.024 kHz from OSC32K
0x02	XTAL32K	32.768 kHz from XOSC32K or external clock from XTAL32K1 pin
0x03	EXTCLK	External clock from the EXTCLK pin

© 2021 Microchip Technology Inc.
and its subsidiaries

chanhvinh.com

24.13.9 Count

Name: CNT
Offset: 0x08
Reset: 0x0000
Property: -

The RTC.CNTL and RTC.CNTH register pair represents the 16-bit value, RTC.CNT. The low byte [7:0] (suffix L) is accessible at the original offset. The high byte [15:8] (suffix H) can be accessed at offset + `0x01`.

Due to the synchronization between the RTC clock and main clock domains, there is a latency of two RTC clock cycles from updating the register until this has an effect. The application software needs to check that the CNTBUSY flag in RTC.STATUS is cleared before writing to this register.

Bit	15	14	13	12	11	10	9	8
	CNT[15:8]							
Access	R/W	R/W	R/W	R/W	R/W	R/W	R/W	R/W
Reset	0	0	0	0	0	0	0	0

Bit	7	6	5	4	3	2	1	0
	CNT[7:0]							
Access	R/W	R/W	R/W	R/W	R/W	R/W	R/W	R/W
Reset	0	0	0	0	0	0	0	0

Bits 15:8 – CNT[15:8] Counter High Byte
These bits hold the MSB of the 16-bit Counter register.

Bits 7:0 – CNT[7:0] Counter Low Byte
These bits hold the LSB of the 16-bit Counter register.

chanhvinh.com

24.13.10 Period

Name: PER
Offset: 0x0A
Reset: 0xFFFF
Property: -

The RTC.PERL and RTC.PERH register pair represents the 16-bit value, RTC.PER. The low byte [7:0] (suffix L) is accessible at the original offset. The high byte [15:8] (suffix H) can be accessed at offset + `0x01`.

Due to the synchronization between the RTC clock and main clock domains, there is a latency of two RTC clock cycles from updating the register until this has an effect. The application software needs to check that the PERBUSY flag in RTC.STATUS is cleared before writing to this register.

Bit	15	14	13	12	11	10	9	8
	PER[15:8]							
Access	R/W	R/W	R/W	R/W	R/W	R/W	R/W	R/W
Reset	1	1	1	1	1	1	1	1

Bit	7	6	5	4	3	2	1	0
	PER[7:0]							
Access	R/W	R/W	R/W	R/W	R/W	R/W	R/W	R/W
Reset	1	1	1	1	1	1	1	1

Bits 15:8 – PER[15:8] Period High Byte
These bits hold the MSB of the 16-bit Period register.

Bits 7:0 – PER[7:0] Period Low Byte
These bits hold the LSB of the 16-bit Period register.

chanhvinh.com

24.13.11 Compare

Name: CMP
Offset: 0x0C
Reset: 0x0000
Property: -

The RTC.CMPL and RTC.CMPH register pair represents the 16-bit value, RTC.CMP. The low byte [7:0] (suffix L) is accessible at the original offset. The high byte [15:8] (suffix H) can be accessed at offset + `0x01`.

Bit	15	14	13	12	11	10	9	8
	CMP[15:8]							
Access	R/W	R/W	R/W	R/W	R/W	R/W	R/W	R/W
Reset	0	0	0	0	0	0	0	0

Bit	7	6	5	4	3	2	1	0
	CMP[7:0]							
Access	R/W	R/W	R/W	R/W	R/W	R/W	R/W	R/W
Reset	0	0	0	0	0	0	0	0

Bits 15:8 – CMP[15:8] Compare High Byte
These bits hold the MSB of the 16-bit Compare register.

Bits 7:0 – CMP[7:0] Compare Low Byte
These bits hold the LSB of the 16-bit Compare register.

chanhvinh.com

chanhvinh.com

24.13.12 Periodic Interrupt Timer Control A

Name: PITCTRLA
Offset: 0x10
Reset: 0x00
Property: -

Bit	7	6	5	4	3	2	1	0
		PERIOD[3:0]						PITEN
Access		R/W	R/W	R/W	R/W			R/W
Reset		0	0	0	0			0

Bits 6:3 – PERIOD[3:0] Period
Writing this bit field selects the number of RTC clock cycles between each interrupt.

Value	Name	Description
0x0	OFF	No interrupt
0x1	CYC4	4 cycles
0x2	CYC8	8 cycles
0x3	CYC16	16 cycles
0x4	CYC32	32 cycles
0x5	CYC64	64 cycles
0x6	CYC128	128 cycles
0x7	CYC256	256 cycles
0x8	CYC512	512 cycles
0x9	CYC1024	1024 cycles
0xA	CYC2048	2048 cycles
0xB	CYC4096	4096 cycles
0xC	CYC8192	8192 cycles
0xD	CYC16384	16384 cycles
0xE	CYC32768	32768 cycles
0xF	-	Reserved

Bit 0 – PITEN Periodic Interrupt Timer Enable

Value	Description
0	Periodic Interrupt Timer disabled
1	Periodic Interrupt Timer enabled

© 2021 Microchip Technology Inc.
and its subsidiaries

chanhvinh.com

24.13.13 Periodic Interrupt Timer Status

Name: PITSTATUS
Offset: 0x11
Reset: 0x00
Property: -

Bit	7	6	5	4	3	2	1	0
								CTRLBUSY
Access								R
Reset								0

Bit 0 – CTRLBUSY PITCTRLA Synchronization Busy
This bit is '1' when the RTC is busy synchronizing the Periodic Interrupt Timer Control A (RTC.PITCTRLA) register in the RTC clock domain.

chanhvinh.com

24.13.14 PIT Interrupt Control

Name: PITINTCTRL
Offset: 0x12
Reset: 0x00
Property: -

Bit	7	6	5	4	3	2	1	0
								PI
Access								R/W
Reset								0

Bit 0 – PI Periodic Interrupt

Value	Description
0	The periodic interrupt is disabled
1	The periodic interrupt is enabled

chanhvinh.com

chanhvinh.com

24.13.15 PIT Interrupt Flag

Name: PITINTFLAGS
Offset: 0x13
Reset: 0x00
Property: -

Bit	7	6	5	4	3	2	1	0
								PI
Access								R/W
Reset								0

Bit 0 – PI Periodic Interrupt Flag
This flag is set when a periodic interrupt is issued.
Writing a '1' clears the flag.

chanhvinh.com

24.13.16 Periodic Interrupt Timer Debug Control

Name: PITDBGCTRL
Offset: 0x15
Reset: 0x00
Property: -

Bit	7	6	5	4	3	2	1	0
								DBGRUN
Access								R/W
Reset								0

Bit 0 – DBGRUN Debug Run

Value	Description
0	The peripheral is halted in Break Debug mode and ignores events
1	The peripheral will continue to run in Break Debug mode when the CPU is halted

chanhvinh.com

25. USART - Universal Synchronous and Asynchronous Receiver and Transmitter

25.1 Features

- Full-Duplex Operation
- Half-Duplex Operation:
  - One-Wire mode
  - RS-485 mode
- Asynchronous or Synchronous Operation
- Supports Serial Frames with Five, Six, Seven, Eight or Nine Data Bits and One or Two Stop Bits
- Fractional Baud Rate Generator:
  - Can generate the desired baud rate from any peripheral clock frequency
  - No need for an external oscillator
- Built-In Error Detection and Correction Schemes:
  - Odd or even parity generation and parity check
  - Buffer overflow and frame error detection
  - Noise filtering including false Start bit detection and digital low-pass filter
- Separate Interrupts for:
  - Transmit complete
  - Transmit Data register empty
  - Receive complete
- Host SPI Mode
- Multiprocessor Communication Mode
- Start-of-Frame Detection
- IRCOM Module for IrDA® Compliant Pulse Modulation/Demodulation
- LIN Client Support

25.2 Overview

The Universal Synchronous and Asynchronous serial Receiver and Transmitter (USART) is a fast and flexible serial communication peripheral. The USART supports several different modes of operation that can accommodate multiple types of applications and communication devices. For example, the One-Wire Half-Duplex mode is useful when low pin count applications are desired. The communication is frame-based, and the frame format can be customized to support a wide range of standards.

The USART is buffered in both directions, enabling continued data transmission without any delay between frames. Separate interrupts for receive and transmit completion allow fully interrupt-driven communication.

The transmitter consists of a two-level write buffer, a Shift register, and control logic for different frame formats. The receiver consists of a two-level receive buffer and a Shift register. The status information of the received data is available for error checking. Data and clock recovery units ensure robust synchronization and noise filtering during asynchronous data reception.

chanhvinh.com

25.2.1 Block Diagram

Figure 25-1. USART Block Diagram

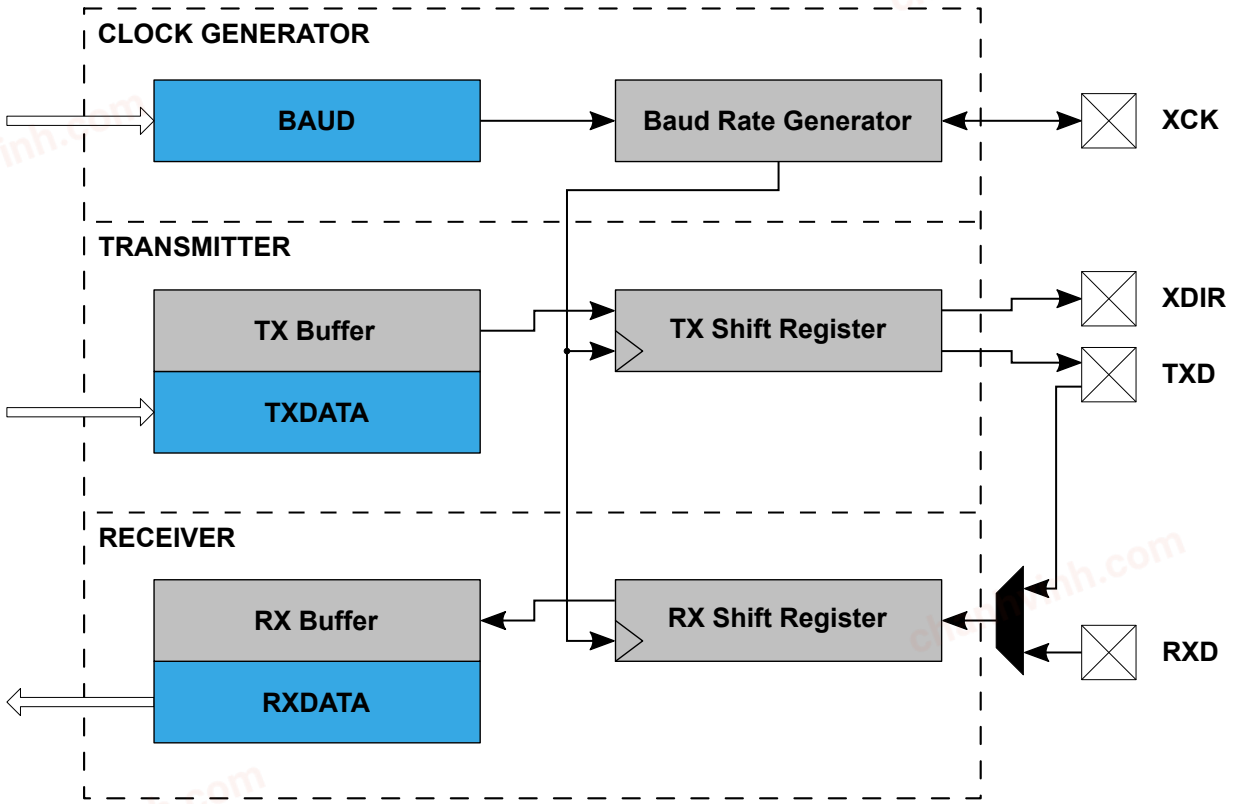

25.2.2 Signal Description

Signal	Type	Description
XCK	Output/input	Clock for synchronous operation
XDIR	Output	Transmit enable for RS-485
TxD	Output/input	Transmitting line (and receiving line in One-Wire mode)
RxD	Input	Receiving line

25.3 Functional Description

25.3.1 Initialization

Full-Duplex Mode:

1. Set the baud rate (USARTn.BAUD).
2. Set the frame format and mode of operation (USARTn.CTRLC).
3. Configure the TXD pin as an output.
4. Enable the transmitter and the receiver (USARTn.CTRLB).

Notes:

- For interrupt-driven USART operation, global interrupts must be disabled during the initialization
- Before doing a reinitialization with a changed baud rate or frame format, be sure that there are no ongoing transmissions while the registers are changed

One-Wire Half-Duplex Mode:

© 2021 Microchip Technology Inc. and its subsidiaries

chanhvinh.com

1. Internally connect the TXD to the USART receiver (the LBME bit in the USARTn.CTRLA register).
2. Enable internal pull-up for the RX/TX pin (the PULLUPEN bit in the PORTx.PINnCTRL register).
3. Enable Open-Drain mode (the ODME bit in the USARTn.CTRLB register).
4. Set the baud rate (USARTn.BAUD).
5. Set the frame format and mode of operation (USARTn.CTRLC).
6. Enable the transmitter and the receiver (USARTn.CTRLB).

Notes:

- When Open-Drain mode is enabled, the TXD pin is automatically set to output by hardware
- For interrupt-driven USART operation, global interrupts must be disabled during the initialization
- Before doing a reinitialization with a changed baud rate or frame format, be sure that there are no ongoing transmissions while the registers are changed

25.3.2 Operation

25.3.2.1 Frame Formats

The USART data transfer is frame-based. A frame starts with a Start bit followed by one character of data bits. If enabled, the Parity bit is inserted after the data bits and before the first Stop bit. After the Stop bit(s) of a frame, either the next frame can follow immediately, or the communication line can return to the Idle (high) state. The USART accepts all combinations of the following as valid frame formats:

- 1 Start bit
- 5, 6, 7, 8, or 9 data bits
- No, even, or odd Parity bit
- 1 or 2 Stop bits

The figure below illustrates the possible combinations of frame formats. Bits inside brackets are optional.

Figure 25-2. Frame Formats

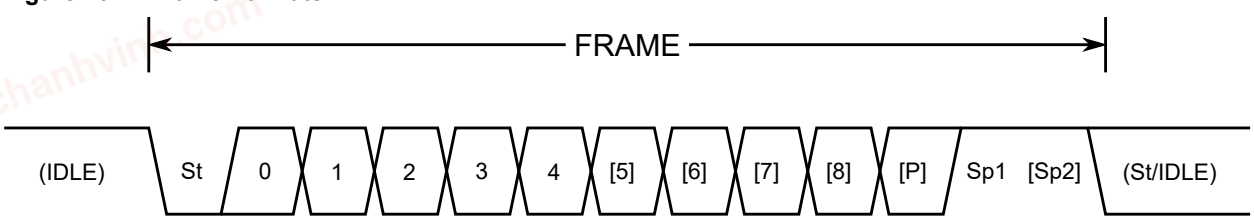

St Start bit, always low

(n) Data bits (0 to 8)

P Parity bit, may be odd or even

Sp Stop bit, always high

IDLE No transfer on the communication line (RxD or TxD). The Idle state is always high.

25.3.2.2 Clock Generation

The clock used for shifting and sampling data bits is generated internally by the fractional baud rate generator or externally from the Transfer Clock (XCK) pin.

chanhvinh.com

Figure 25-3. Clock Generation Logic Block Diagram

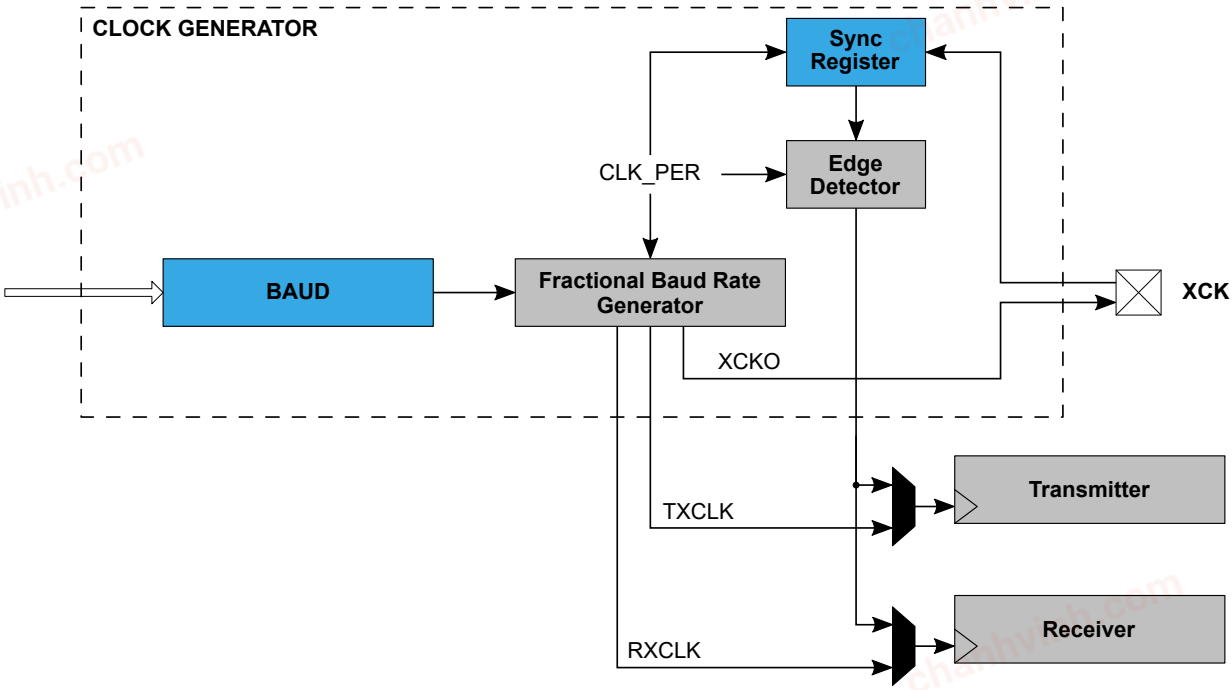

25.3.2.2.1 The Fractional Baud Rate Generator

In modes where the USART is not using the XCK input as a clock source, the fractional Baud Rate Generator is used to generate the clock. Baud rate is given in terms of bits per second (bps) and is configured by writing the USARTn.BAUD register. The baud rate (f_{BAUD}) is generated by dividing the peripheral clock (f_{CLK_PER}) by a division factor decided by the BAUD register.

The fractional Baud Rate Generator features hardware that accommodates cases where f_{CLK_PER} is not divisible by f_{BAUD}. Usually, this situation would lead to a rounding error. The fractional Baud Rate Generator expects the BAUD register to contain the desired division factor left shifted by six bits, as implemented by the equations in Table 25-1. The six Least Significant bits (LSbs) will then hold the fractional part of the desired divisor. Use the fractional part of the BAUD register to dynamically adjust f_{BAUD} to achieve a closer approximation to the desired baud rate.

Since the baud rate cannot be higher than f_{CLK_PER}, the integer part of the BAUD register needs to be at least 1. Since the result is left shifted by six bits, the corresponding minimum value of the BAUD register is 64. The valid range is, therefore, 64 to 65535.

In Synchronous mode, only the 10-bit integer part of the BAUD register (BAUD[15:6]) determines the baud rate, and the fractional part (BAUD[5:0]) must, therefore, be written to zero.

The table below lists equations for translating baud rates into input values for the BAUD register. The equations consider fractional interpretation, so the BAUD values calculated with these equations can be written directly to USARTn.BAUD without any additional scaling.

Table 25-1. Equations for Calculating Baud Rate Register Setting

Operating Mode	Conditions	Baud Rate (Bits Per Seconds)	USART.BAUD Register Value Calculation
Asynchronous	$f_{BAUD} \leq \frac{f_{CLK_PER}}{S}$ $USART.BAUD \geq 64$	$f_{BAUD} = \frac{64 \times f_{CLK_PER}}{S \times BAUD}$	$BAUD = \frac{64 \times f_{CLK_PER}}{S \times f_{BAUD}}$
Synchronous Host	$f_{BAUD} \leq \frac{f_{CLK_PER}}{S}$ $USART.BAUD \geq 64$	$f_{BAUD} = \frac{f_{CLK_PER}}{S \times BAUD[15:6]}$	$BAUD[15:6] = \frac{f_{CLK_PER}}{S \times f_{BAUD}}$

chanhvinh.com

S is the number of samples per bit

- Asynchronous Normal mode: S = 16
- Asynchronous Double-Speed mode: S = 8
- Synchronous mode: S = 2

25.3.2.3 Data Transmission

The USART transmitter sends data by periodically driving the transmission line low. The data transmission is initiated by loading the Transmit Data (USARTn.TXDATAL and USARTn.TXDATAH) registers with the data to be sent. The data in the Transmit Data registers are moved to the TX Buffer once it is empty and onwards to the Shift register once it is empty and ready to send a new frame. After the Shift register is loaded with data, the data frame will be transmitted.

When the entire frame in the Shift register has been shifted out, and there are no new data present in the Transmit Data registers or the TX Buffer, the Transmit Complete Interrupt Flag (the TXCIF bit in the USARTn.STATUS register) is set, and the interrupt is generated if it is enabled.

The Transmit Data registers can only be written when the Data Register Empty Interrupt Flag (the DREIF bit in the USARTn.STATUS register) is set, indicating that they are empty and ready for new data.

When using frames with fewer than eight bits, the Most Significant bits (MSb) written to the Transmit Data registers are ignored. When the Character Size (CHSIZE) bit field in the Control C (USARTn.CTRLC) register is configured to 9-bit (low byte first), the Transmit Data Register Low Byte (TXDATAL) must be written before the Transmit Data Register High Byte (TXDATAH). When CHSIZE is configured to 9-bit (high byte first), TXDATAH must be written before TXDATAL.

25.3.2.3.1 Disabling the Transmitter

When disabling the transmitter, the operation will not become effective until ongoing and pending transmissions are completed. That is, when the Transmit Shift register, Transmit Data (USARTn.TXDATAL and USARTn.TXDATAH) registers, and TX Buffer register do not contain data to be transmitted. When the transmitter is disabled, it will no longer override the TXD pin, and the PORT module regains control of the pin. The pin is automatically configured as an input by hardware regardless of its previous setting. The pin can now be used as a normal I/O pin with no port override from the USART.

25.3.2.4 Data Reception

The USART receiver samples the reception line to detect and interpret the received data. The direction of the pin must, therefore, be configured as an input by writing a '0' to the corresponding bit in the Data Direction (PORTx.DIR) register.

The receiver accepts data when a valid Start bit is detected. Each bit that follows the Start bit will be sampled at the baud rate or XCK clock and shifted into the Receive Shift register until the first Stop bit of a frame is received. A second Stop bit will be ignored by the receiver. When the first Stop bit is received, and a complete serial frame is present in the Receive Shift register, the contents of the Shift register will be moved into the receive buffer. The Receive Complete Interrupt Flag (the RXCIF bit in the USARTn.STATUS register) is set, and the interrupt is generated if enabled.

The RXDATA registers are the part of the double-buffered RX buffer that can be read by the application software when RXCIF is set. If only one frame has been received, the data and status bits for that frame are pushed to the RXDATA registers directly. If two frames are present in the RX buffer, the RXDATA registers contain the data for the oldest frame.

The buffer shifts out the data either when RXDATAL or RXDATAH is read, depending on the configuration. The register, which does not lead to data being shifted, must be read first to be able to read both bytes before shifting. When the Character Size (CHSIZE) bit field in the Control C (USARTn.CTRLC) register is configured to 9-bit (low byte first), a read of RXDATAH shifts the receive buffer. Otherwise, RXDATAL shifts the buffer.

25.3.2.4.1 Receiver Error Flags

The USART receiver features error detection mechanisms that uncover any corruption of the transmission. These mechanisms include the following:

- Frame Error detection - controls whether the received frame is valid
- Buffer Overflow detection - indicates data loss due to the receiver buffer being full and overwritten by the new data

© 2021 Microchip Technology Inc.
and its subsidiaries

chanhvinh.com

- Parity Error detection - checks the validity of the incoming frame by calculating its parity and comparing it to the Parity bit

Each error detection mechanism controls one error flag that can be read in the RXDATAH register:

- Frame Error (FERR)
- Buffer Overflow (BUFOVF)
- Parity Error (PERR)

The error flags are located in the RX buffer together with their corresponding frame. The RXDATAH register that contains the error flags must be read before the RXDATAL register since reading the RXDATAL register will trigger the RX buffer to shift out the RXDATA bytes.

Note: If the Character Size (CHSIZE) bit field in the Control C (USARTn.CTRLC) register is set to nine bits, low byte first (9BITL), the RXDATAH register will, instead of the RXDATAL register, trigger the RX buffer to shift out the RXDATA bytes. The RXDATAL register must, in that case, be read before the RXDATAH register.

25.3.2.4.2 Disabling the Receiver

When disabling the receiver, the operation is immediate. The receiver buffer will be flushed, and data from ongoing receptions will be lost.

25.3.2.4.3 Flushing the Receive Buffer

If the RX buffer has to be flushed during normal operation, repeatedly read the DATA location (USARTn.RXDATAH and USARTn.RXDATAL registers) until the Receive Complete Interrupt Flag (the RXCIF bit in the USARTn.RXDATAH register) is cleared.

25.3.3 Communication Modes

The USART is a flexible peripheral that supports multiple different communication protocols. The available modes of operation can be split into two groups: Synchronous and asynchronous communication.

The synchronous communication relies on one device on the bus to be the host, providing the rest of the devices with a clock signal through the XCK pin. All the devices use this common clock signal for both transmission and reception, requiring no additional synchronization mechanism.

The device can be configured to run either as a host or a client on the synchronous bus.

The asynchronous communication does not use a common clock signal. Instead, it relies on the communicating devices to be configured with the same baud rate. When receiving a transmission, the hardware synchronization mechanisms are used to align the incoming transmission with the receiving device peripheral clock.

Four different modes of reception are available when communicating asynchronously. One of these modes can receive transmissions at twice the normal speed, sampling only eight times per bit instead of the normal 16. The other three operating modes use variations of synchronization logic, all receiving at normal speed.

25.3.3.1 Synchronous Operation

25.3.3.1.1 Clock Operation

The XCK pin direction controls whether the transmission clock is an input (Client mode) or an output (Host mode). The corresponding port pin direction must be set to output for Host mode or input for Client mode (PORTx.DIRn). The data input (on RXD) is sampled at the XCK clock edge, which is opposite the edge where data are transmitted (on TXD), as shown in the figure below.

chanhvinh.com

Figure 25-4. Synchronous Mode XCK Timing

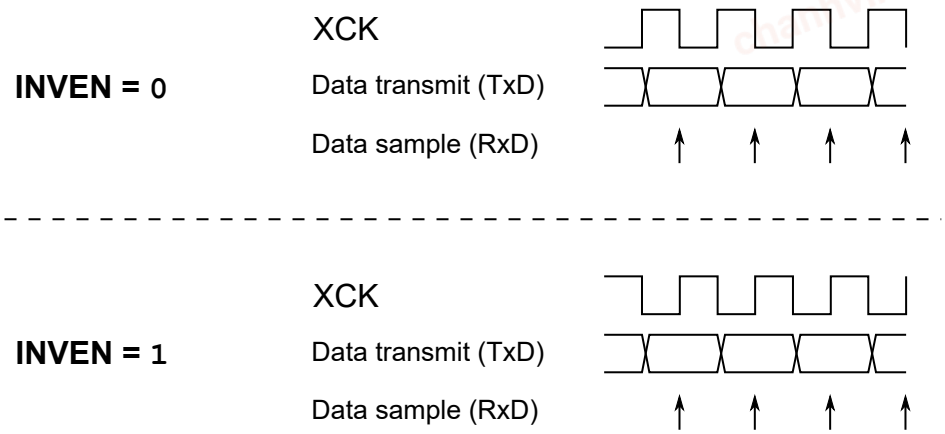

The I/O pin can be inverted by writing a '1' to the Inverted I/O Enable (INVEN) bit in the Pin n Control register of the port peripheral (PORTx.PINnCTRL). When using the inverted I/O setting for the corresponding XCK port pin, the XCK clock edges used for sampling RxD and transmitting on TxD can be selected. If the inverted I/O is disabled (INVEN = 0), the rising XCK clock edge represents the start of a new data bit, and the received data will be sampled at the falling XCK clock edge. If inverted I/O is enabled (INVEN = 1), the falling XCK clock edge represents the start of a new data bit, and the received data will be sampled at the rising XCK clock edge.

25.3.3.1.2 External Clock Limitations

When the USART is configured in Synchronous Client mode, the XCK signal must be provided externally by the host device. Since the clock is provided externally, configuring the BAUD register will have no impact on the transfer speed. Successful clock recovery requires the clock signal to be sampled at least twice for each rising and falling edge. The maximum XCK speed in Synchronous Operation mode, f_{Client_XCK}, is therefore limited by:

$$f_{Client_XCK} < \frac{f_{CLK_PER}}{4}$$

If the XCK clock has jitter, or if the high/low period duty cycle is not 50/50, the maximum XCK clock speed must be reduced accordingly to ensure that XCK is sampled a minimum of two times for each edge.

25.3.3.1.3 USART in Host SPI Mode

The USART may be configured to function with multiple different communication interfaces, and one of these is the Serial Peripheral Interface (SPI), where it can work as the host device. The SPI is a four-wire interface that enables a host device to communicate with one or multiple clients.

Frame Formats

The serial frame for the USART in Host SPI mode always contains eight Data bits. The Data bits can be configured to be transmitted with either the LSb or MSb first by writing to the Data Order (UDORD) bit in the Control C (USARTn.CTRLC) register.

SPI does not use Start, Stop, or Parity bits, so the transmission frame can only consist of the Data bits.

Clock Generation

Being a host device in a synchronous communication interface, the USART in Host SPI mode must generate the interface clock to be shared with the client devices. The interface clock is generated using the fractional Baud Rate Generator, which is described in 25.3.2.2.1 The Fractional Baud Rate Generator.

Each Data bit is transmitted by pulling the data line high or low for one full clock period. The receiver will sample bits in the middle of the transmitter hold period, as shown in the figure below. It also shows how the timing scheme can be configured using the Inverted I/O Enable (INVEN) bit in the PORTx.PINnCTRL register and the USART Clock Phase (UCPHA) bit in the USARTn.CTRLC register.

© 2021 Microchip Technology Inc. and its subsidiaries

chanhvinh.com

Figure 25-5. Data Transfer Timing Diagrams

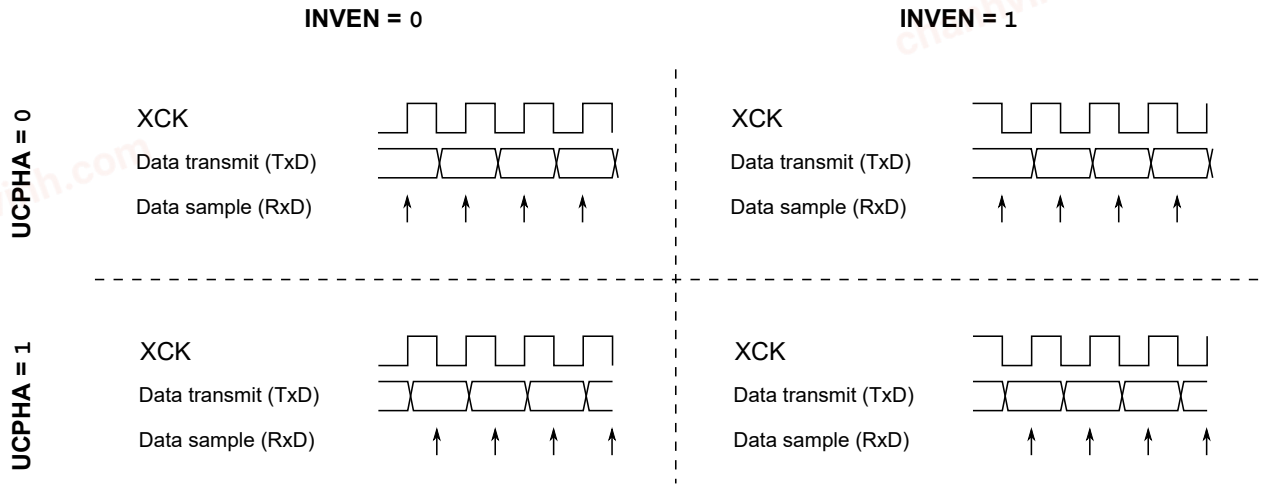

The table below further explains the figure above.

Table 25-2. Functionality of the INVEN and UCPHA Bits

INVEN	UCPHA	Leading Edge (1)	Trailing Edge (1)
0	0	Rising, sample	Falling, transmit
0	1	Rising, transmit	Falling, sample
1	0	Falling, sample	Rising, transmit
1	1	Falling, transmit	Rising, sample

Note:

1. The leading edge is the first clock edge of a clock cycle. The trailing edge is the last clock edge of a clock cycle.

Data Transmission

Data transmission in Host SPI mode is functionally identical to the general USART operation, as described in the *Operation* section. The transmitter interrupt flags and corresponding USART interrupts are also identical. See 25.3.2.3 Data Transmission for further description.

Data Reception

Data reception in Host SPI mode is identical in function to general USART operation as described in the *Operation* section. The receiver interrupt flags and the corresponding USART interrupts are also identical, except for the receiver error flags that are not in use and always read as '0'. See 25.3.2.4 Data Reception for further description.

USART in Host SPI Mode vs. SPI

The USART in Host SPI mode is fully compatible with a stand-alone SPI peripheral. Their data frame and timing configurations are identical. Some SPI specific special features are, however, not supported with the USART in Host SPI mode:

- Write Collision Flag Protection
- Double-Speed mode
- Multi-Host support

A comparison of the pins used with USART in Host SPI mode and with SPI is shown in the table below.

Table 25-3. Comparison of USART in Host SPI Mode and SPI Pins

USART	SPI	Comment
TXD	MOSI	Host out
RXD	MISO	Host in

chanhvinh.com

.....continued		
USART	**SPI**	**Comment**
XCK	SCK	Functionally identical
-	$\overline{SS}$	Not supported by USART in Host SPI mode(1)

Note:

1. For the stand-alone SPI peripheral, this pin is used with the Multi-Host function or as a dedicated Client Select pin. The Multi-Host function is not available with the USART in Host SPI mode, and no dedicated Client Select pin is available.

25.3.3.2 Asynchronous Operation

25.3.3.2.1 Clock Recovery

Since there is no common clock signal when using Asynchronous mode, each communicating device generates separate clock signals. These clock signals must be configured to run at the same baud rate for the communication to take place. The devices, therefore, run at the same speed, but their timing is skewed in relation to each other. To accommodate this, the USART features a hardware clock recovery unit which synchronizes the incoming asynchronous serial frames with the internally generated baud rate clock.

The figure below illustrates the sampling process for the Start bit of an incoming frame. It shows the timing scheme for both Normal and Double-Speed mode (the RXMODE bit field in the USARTn.CTRLB register configured respectively to `0x00` and `0x01`). The sample rate for Normal mode is 16 times the baud rate, while the sample rate for Double-Speed mode is eight times the baud rate (see 25.3.3.2.4 Double-Speed Operation for more details). The horizontal arrows show the maximum synchronization error. Note that the maximum synchronization error is larger in Double-Speed mode.

Figure 25-6. Start Bit Sampling

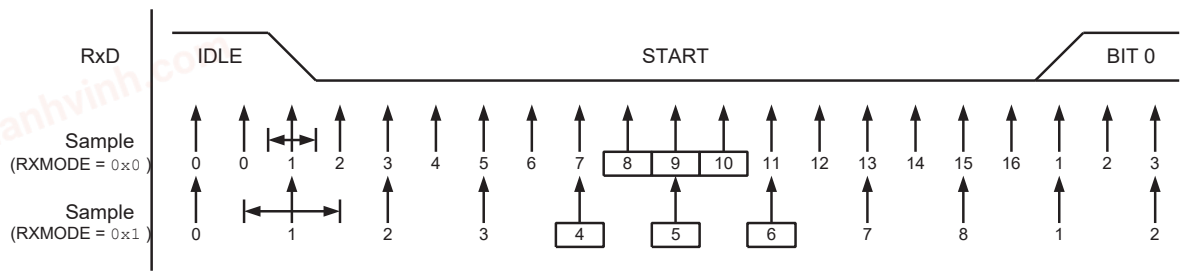

When the clock recovery logic detects a falling edge from the Idle (high) state to the Start bit (low), the Start bit detection sequence is initiated. In the figure above, sample 1 denotes the first sample reading '0'. The clock recovery logic then uses three subsequent samples (samples 8, 9, and 10 in Normal mode, and samples 4, 5, 6 in Double-Speed mode) to decide if a valid Start bit is received. If two or three samples read '0', the Start bit is accepted. The clock recovery unit is synchronized, and the data recovery can begin. If less than two samples read '0', the Start bit is rejected. This process is repeated for each Start bit.

25.3.3.2.2 Data Recovery

As with clock recovery, the data recovery unit samples at a rate 8 or 16 times faster than the baud rate depending on whether it is running in Double-Speed or Normal mode, respectively. The figure below shows the sampling process for reading a bit in a received frame.

chanhvinh.com

Figure 25-7. Sampling of Data and Parity Bits

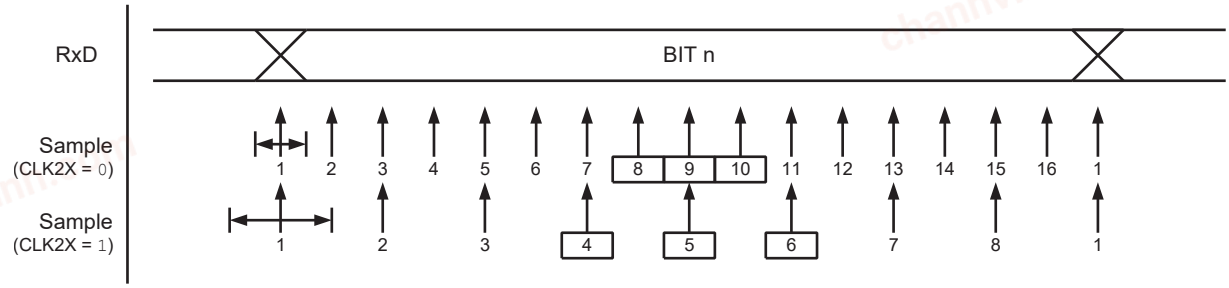

A majority voting technique is, like with clock recovery, used on the three center samples for deciding the logic level of the received bit. The process is repeated for each bit until a complete frame is received.

The data recovery unit will only receive the first Stop bit while ignoring the rest if there are more. If the sampled Stop bit is read '0', the Frame Error flag will be set. The figure below shows the sampling of a Stop bit. It also shows the earliest possible beginning of the next frame's Start bit.

Figure 25-8. Stop Bit and Next Start Bit Sampling

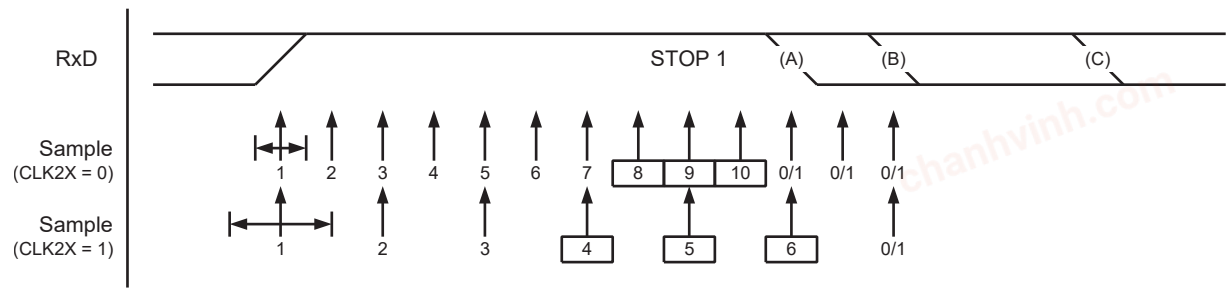

A new high-to-low transition indicating the Start bit of a new frame can come right after the last of the bits used for majority voting. For Normal-Speed mode, the first low-level sample can be at the point marked (A) in the figure above. For Double-Speed mode, the first low level must be delayed to point (B), being the first sample after the majority vote samples. Point (C) marks a Stop bit of full length at the nominal baud rate.

25.3.3.2.3 Error Tolerance

The speed of the internally generated baud rate and the externally received data rate has to be identical, but, due to natural clock source error, this is usually not the case. The USART is tolerant of such error, and the limits of this tolerance make up what is sometimes known as the Operational Range.

The following tables list the operational range of the USART, being the maximum receiver baud rate error that can be tolerated. Note that Normal-Speed mode has higher toleration of baud rate variations than Double-Speed mode.

Table 25-4. Recommended Maximum Receiver Baud Rate Error for Normal-Speed Mode

D	R_{slow} [%]	R_{fast} [%]	Maximum Total Error [%]	Recommended Max. Receiver Error [%]
5	93.20	106.67	-6.80/+6.67	±3.0
6	94.12	105.79	-5.88/+5.79	±2.5
7	94.81	105.11	-5.19/+5.11	±2.0
8	95.36	104.58	-4.54/+4.58	±2.0
9	95.81	104.14	-4.19/+4.14	±1.5
10	96.17	103.78	-3.83/+3.78	±1.5

Notes:

- D: The sum of character size and parity size (D = 5 to 10 bits)
- R_{SLOW}: The ratio of the slowest incoming data rate that can be accepted in relation to the receiver baud rate
- R_{FAST}: The ratio of the fastest incoming data rate that can be accepted in relation to the receiver baud rate

chanhvinh.com

Table 25-5. Recommended Maximum Receiver Baud Rate Error for Double-Speed Mode

D	R_{slow} [%]	R_{fast} [%]	Maximum Total Error [%]	Recommended Max. Receiver Error [%]
5	94.12	105.66	-5.88/+5.66	±2.5
6	94.92	104.92	-5.08/+4.92	±2.0
7	95.52	104.35	-4.48/+4.35	±1.5
8	96.00	103.90	-4.00/+3.90	±1.5
9	96.39	103.53	-3.61/+3.53	±1.5
10	96.70	103.23	-3.30/+3.23	±1.0

Notes:

- D: The sum of character size and parity size (D = 5 to 10 bits)
- R_{SLOW}: The ratio of the slowest incoming data rate that can be accepted in relation to the receiver baud rate
- R_{FAST}: The ratio of the fastest incoming data rate that can be accepted in relation to the receiver baud rate

The recommendations of the maximum receiver baud rate error were made under the assumption that the receiver and transmitter equally divide the maximum total error.

The following equations are used to calculate the maximum ratio of the incoming data rate and the internal receiver baud rate.

$R_{SLOW} = \frac{S(D+1)}{S(D+1)+S_F-1}$	$R_{FAST} = \frac{S(D+2)}{S(D+1)+S_M}$

- D: The sum of character size and parity size (D = 5 to 10 bits)
- S: Samples per bit. S = 16 for Normal-Speed mode and S = 8 for Double-Speed mode.
- S_F: First sample number used for majority voting. SF = 8 for Normal-Speed mode and SF = 4 for Double-Speed mode.
- S_M: Middle sample number used for majority voting. SM = 9 for Normal-Speed mode and SM = 5 for Double-Speed mode.
- R_{SLOW}: The ratio of the slowest incoming data rate that can be accepted in relation to the receiver baud rate
- R_{FAST}: The ratio of the fastest incoming data rate that can be accepted in relation to the receiver baud rate

25.3.3.2.4 Double-Speed Operation

The double-speed operation allows for higher baud rates under asynchronous operation with lower peripheral clock frequencies. This operation mode is enabled by writing the RXMODE bit field in the Control B (USARTn.CTRLB) register to `0x01`.

When enabled, the baud rate for a given asynchronous baud rate setting will be doubled, as shown in the equations in 25.3.2.2.1 The Fractional Baud Rate Generator. In this mode, the receiver will use half the number of samples (reduced from 16 to 8) for data sampling and clock recovery. This requires a more accurate baud rate setting and peripheral clock. See 25.3.3.2.3 Error Tolerance for more details.

25.3.3.2.5 Auto-Baud

The auto-baud feature lets the USART configure its BAUD register based on input from a communication device, which allows the device to communicate autonomously with multiple devices communicating with different baud rates. The USART peripheral features two auto-baud modes: Generic Auto-Baud mode and LIN Constrained Auto-Baud mode.

Both auto-baud modes must receive an auto-baud frame, as seen in the figure below.

© 2021 Microchip Technology Inc.
and its subsidiaries

chanhvinh.com

Figure 25-9. Auto-Baud Timing

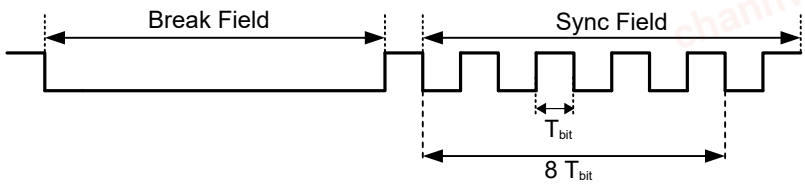

The break field is detected when 12 or more consecutive low cycles are sampled and notifies the USART that it is about to receive the synchronization field. After the break field, when the Start bit of the synchronization field is detected, a counter running at the peripheral clock speed is started. The counter is then incremented for the next eight T_{bit} of the synchronization field. When all eight bits are sampled, the counter is stopped. The resulting counter value is in effect the new BAUD register value.

When the USART Receive mode is set to GENAUTO (the RXMODE bit field in the USARTn.CTRLB register), the Generic Auto-Baud mode is enabled. In this mode, one can set the Wait For Break (WFB) bit in the USARTn.STATUS register to enable detection of a break field of any length (that is, also shorter than 12 cycles). This makes it possible to set an arbitrary new baud rate without knowing the current baud rate. If the measured sync field results in a valid BAUD value (`0x0064` - `0xFFFF`), the BAUD register is updated.

When USART Receive mode is set to LINAUTO mode (the RXMODE bit field in the USARTn.CTRLB register), it follows the LIN format. The WFB functionality of the Generic Auto-Baud mode is not compatible with the LIN Constrained Auto-Baud mode, which means that the received signal must be low for 12 peripheral clock cycles or more for a break field to be valid. When a break field has been detected, the USART expects the following synchronization field character to be `0x55`. If the received synchronization field character is not `0x55`, the Inconsistent Sync Field Error Flag (the ISFIF bit in the USARTn.STATUS register) is set, and the baud rate is unchanged.

25.3.3.2.6 Half-Duplex Operation

Half-duplex is a type of communication where two or more devices may communicate with each other, but only one at a time. The USART can be configured to operate in the following half-duplex modes:

- One-Wire mode
- RS-485 mode

One-Wire Mode

One-Wire mode is enabled by setting the Loop-Back Mode Enable (LBME) bit in the USARTn.CTRLA register. This will enable an internal connection between the TXD pin and the USART receiver, making the TXD pin a combined TxD/RxD line. The RXD pin will be disconnected from the USART receiver and may be controlled by a different peripheral.

In One-Wire mode, multiple devices can manipulate the TxD/RxD line at the same time. In the case where one device drives the pin to a logical high level (V_{CC}), and another device pulls the line low (GND), a short will occur. To accommodate this, the USART features an Open-Drain mode (the ODME bit in the USARTn.CTRLB register), which prevents the transmitter from driving a pin to a logical high level, thereby constraining it to only be able to pull it low. Combining this function with the internal pull-up feature (the PULLUPEN bit in the PORTx.PINnCTRL register) will let the line be held high through a pull-up resistor, allowing any device to pull it low. When the line is pulled low, the current from V_{CC} to GND will be limited by the pull-up resistor. The TXD pin is automatically set to output by hardware when the Open-Drain mode is enabled.

When the USART is transmitting to the TxD/RxD line, it will also receive its transmission. This can be used to detect overlapping transmissions by checking if the received data are the same as the transmitted data.

RS-485 Mode

RS-485 is a communication standard supported by the USART peripheral. It is a physical interface that defines the setup of a communication circuit. Data are transmitted using differential signaling, making communication robust against noise. RS-485 is enabled by writing the RS485 bit in the USARTn.CTRLA register to '`1`'.

The RS-485 mode supports external line driver devices that convert a single USART transmission into corresponding differential pair signals. It implements automatic control of the XDIR pin that can be used to enable transmission or reception for the line driver device. The USART automatically drives the XDIR pin high while the USART is transmitting and pulls it low when the transmission is complete. An example of such a circuit is shown in the figure below.

© 2021 Microchip Technology Inc. and its subsidiaries

chanhvinh.com

Figure 25-10. RS-485 Bus Connection

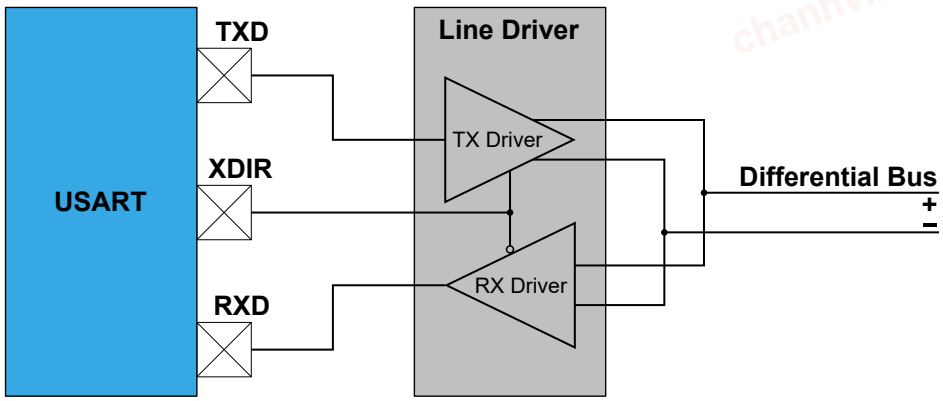

The XDIR pin goes high one baud clock cycle in advance of data being shifted out to allow some guard time to enable the external line driver. The XDIR pin will remain high for the complete frame, including Stop bit(s).

Figure 25-11. XDIR Drive Timing

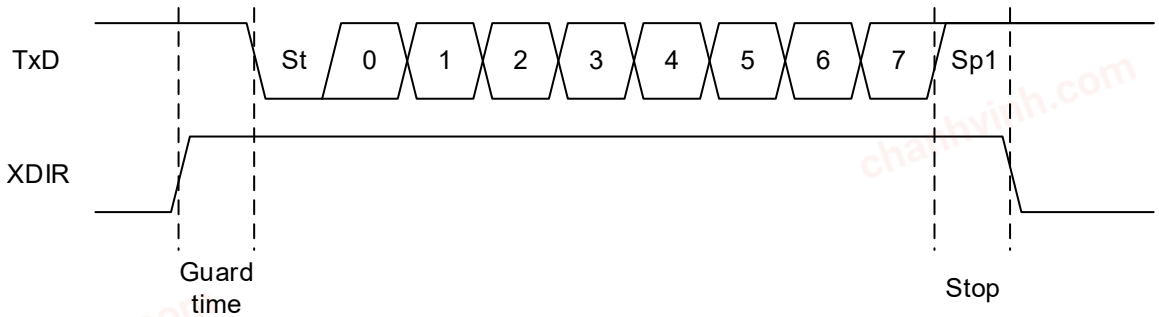

RS-485 mode is compatible with One-Wire mode. One-Wire mode enables an internal connection between the TXD pin and the USART receiver, making the TXD pin a combined TxD/RxD line. The RXD pin will be disconnected from the USART receiver and may be controlled by a different peripheral. An example of such a circuit is shown in the figure below.

Figure 25-12. RS-485 with Loop-Back Mode Connection

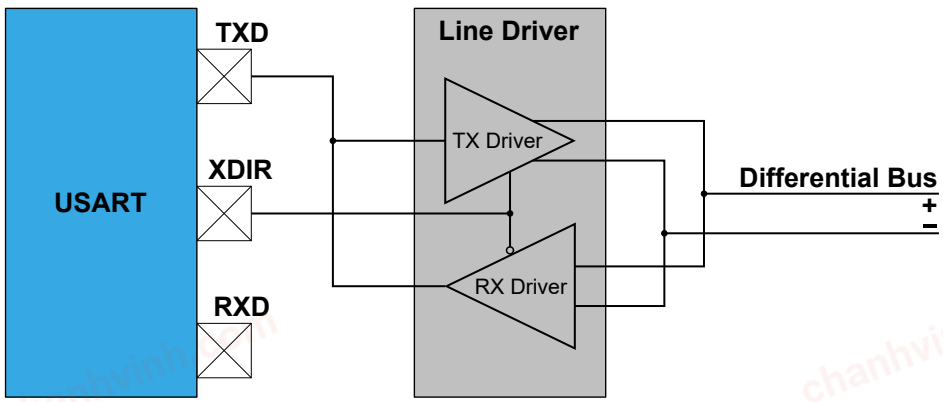

25.3.3.2.7 IRCOM Mode of Operation

The USART peripheral can be configured in Infrared Communication mode (IRCOM), which is IrDA® 1.4 compatible with baud rates up to 115.2 kbps. When enabled, the IRCOM mode enables infrared pulse encoding/decoding for the USART.

chanhvinh.com

Figure 25-13. Block Diagram

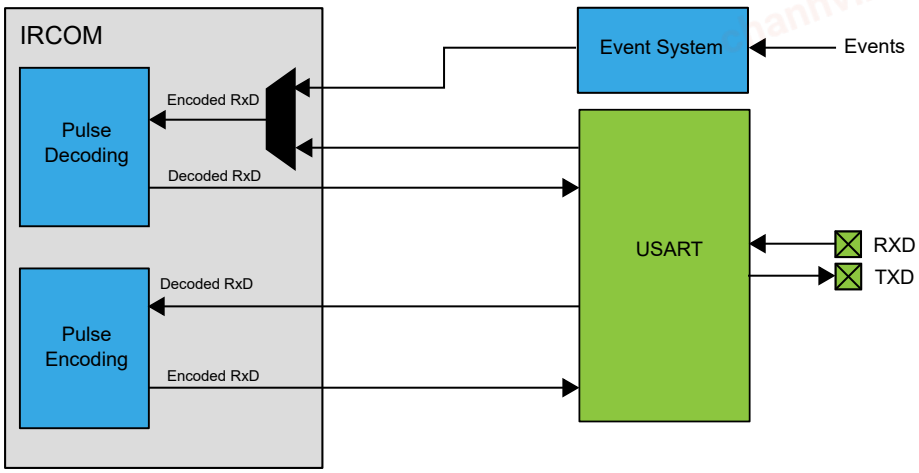

The USART is set in IRCOM mode by writing `0x02` to the CMODE bit field in the USARTn.CTRLC register. The data on the TXD/RXD pins are the inverted values of the transmitted/received infrared pulse. It is also possible to select an event channel from the Event System as an input for the IRCOM receiver. This enables the IRCOM to receive input from the I/O pins or sources other than the corresponding RXD pin, which will disable the RxD input from the USART pin.

For transmission, three pulse modulation schemes are available:

- 3/16 of the baud rate period
- Fixed programmable pulse time based on the peripheral clock frequency
- Pulse modulation disabled

For the reception, a fixed programmable minimum high-level pulse-width for the pulse to be decoded as a logical '0' is used. Shorter pulses will then be discarded, and the bit will be decoded to logical '1' as if no pulse was received.

Double-Speed mode cannot be used for the USART when IRCOM mode is enabled.

25.3.4 Additional Features

25.3.4.1 Parity

Parity bits can be used by the USART to check the validity of a data frame. The Parity bit is set by the transmitter based on the number of bits with the value of '1' in a transmission and controlled by the receiver upon reception. If the Parity bit is inconsistent with the transmission frame, the receiver may assume that the data frame has been corrupted.

Even or odd parity can be selected for error checking by writing the Parity Mode (PMODE) bit field in the USARTn.CTRLC register. If even parity is selected, the Parity bit is set to '1' if the number of Data bits with value '1' is odd (making the total number of bits with value '1' even). If odd parity is selected, the Parity bit is set to '1' if the number of data bits with value '1' is even (making the total number of bits with value '1' odd).

When enabled, the parity checker calculates the parity of the data bits in incoming frames and compares the result with the Parity bit of the corresponding frame. If a parity error is detected, the Parity Error flag (the PERR bit in the USARTn.RXDATAH register) is set.

If LIN Constrained Auto-Baud mode is enabled (RXMODE = `0x03` in the USARTn.CTRLB register), a parity check is performed only on the protected identifier field. A parity error is detected if one of the equations below is not true, which sets the Parity Error flag.

$$P0 = ID0 \text{ XOR } ID1 \text{ XOR } ID2 \text{ XOR } ID4$$

$$P1 = \text{ NOT } (ID1 \text{ XOR } ID3 \text{ XOR } ID4 \text{ XOR } ID5)$$

chanhvinh.com

Figure 25-14. Protected Identifier Field and Mapping of Identifier and Parity Bits

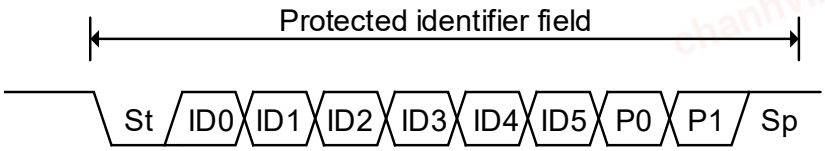

25.3.4.2 Start-of-Frame Detection

The Start-of-Frame Detection feature enables the USART to wake up from Standby sleep mode upon data reception.

When a high-to-low transition is detected on the RXD pin, the oscillator is powered up, and the USART peripheral clock is enabled. After start-up, the rest of the data frame can be received, provided that the baud rate is slow enough concerning the oscillator start-up time. The start-up time of the oscillators varies with supply voltage and temperature. For details on oscillator start-up time characteristics, refer to the *Electrical Characteristics* section.

If a false Start bit is detected, the device will, if another wake-up source has not been triggered, go back into the Standby sleep mode.

The Start-of-Frame detection works in Asynchronous mode only. It is enabled by writing the Start-of-Frame Detection Enable (SFDEN) bit in the USARTn.CTRLB register. If a Start bit is detected while the device is in Standby sleep mode, the USART Receive Start Interrupt Flag (RXSIF) bit is set.

The USART Receive Complete Interrupt Flag (RXCIF) bit and the RXSIF bit share the same interrupt line, but each has its dedicated interrupt settings. The table below shows the USART Start Frame Detection modes, depending on the interrupt setting.

Table 25-6. USART Start Frame Detection Modes

SFDEN	RXSIF Interrupt	RXCIF Interrupt	Comment
0	x	x	Standard mode
1	Disabled	Disabled	Only the oscillator is powered during the frame reception. If the interrupts are disabled and buffer overflow is ignored, all incoming frames will be lost
1	Disabled	Enabled	System/all clocks are awakened on Receive Complete interrupt
1	Enabled	x	System/all clocks are awakened when a Start bit is detected

Note: The SLEEP instruction will not shut down the oscillator if there is ongoing communication.

25.3.4.3 Multiprocessor Communication

The Multiprocessor Communication mode (MPCM) effectively reduces the number of incoming frames that have to be handled by the receiver in a system with multiple microcontrollers communicating via the same serial bus. This mode is enabled by writing a '1' to the MPCM bit in the Control B (USARTn.CTRLB) register. In this mode, a dedicated bit in the frames is used to indicate whether the frame is an address or data frame type.

If the receiver is set up to receive frames that contain five to eight data bits, the first Stop bit is used to indicate the frame type. If the receiver is set up for frames with nine data bits, the ninth bit is used to indicate frame type. When the frame type bit is '1', the frame contains an address. When the frame type bit is '0', the frame is a data frame. If 5- to 8-bit character frames are used, the transmitter must be set to use two Stop bits since the first Stop bit is used for indicating the frame type.

If a particular client MCU has been addressed, it will receive the following data frames as usual, while the other client MCUs will ignore the frames until another address frame is received.

25.3.4.3.1 Using Multiprocessor Communication

Use the following procedure to exchange data in Multiprocessor Communication mode (MPCM):

1. All client MCUs are in Multiprocessor Communication mode.
2. The host MCU sends an address frame, and all clients receive and read this frame.
3. Each client MCU determines if it has been selected.

chanhvinh.com

4. The addressed MCU will disable MPCM and receive all data frames. The other client MCUs will ignore the data frames.
5. When the addressed MCU has received the last data frame, it must enable MPCM again and wait for a new address frame from the host.

The process then repeats from step 2.

25.3.5 Events

The USART can generate the events described in the table below.

Table 25-7. Event Generators in USART

Generator Name		Description	Event Type	Generating Clock Domain	Length of Event
Peripheral	Event				
USARTn	XCK	The clock signal in SPI Host mode and Synchronous USART Host mode	Pulse	CLK_PER	One XCK period

The table below describes the event user and its associated functionality.

Table 25-8. Event Users in USART

User Name		Description	Input Detection	Async/Sync
Peripheral	Input			
USARTn	IREI	USARTn IrDA event input	Pulse	Sync

25.3.6 Interrupts

Table 25-9. Available Interrupt Vectors and Sources

Name	Vector Description	Conditions
RXC	Receive Complete interrupt	• There is unread data in the receive buffer (RXCIE) • Receive of Start-of-Frame detected (RXSIE) • Auto-Baud Error/ISFIF flag set (ABEIE)
DRE	Data Register Empty interrupt	The transmit buffer is empty/ready to receive new data (DREIE)
TXC	Transmit Complete interrupt	The entire frame in the Transmit Shift register has been shifted out and there are no new data in the transmit buffer (TXCIE)

When an Interrupt condition occurs, the corresponding Interrupt flag is set in the STATUS (USARTn.STATUS) register.

An interrupt source is enabled or disabled by writing to the corresponding bit in the Control A (USARTn.CTRLA) register.

An interrupt request is generated when the corresponding interrupt source is enabled, and the Interrupt flag is set. The interrupt request remains active until the Interrupt flag is cleared. See the USARTn.STATUS register for details on how to clear Interrupt flags.

© 2021 Microchip Technology Inc. and its subsidiaries

chanhvinh.com

25.4 Register Summary

Offset	Name	Bit Pos.	7	6	5	4	3	2	1	0
0x00	RXDATAL	7:0	DATA[7:0]							
0x01	RXDATAH	7:0	RXCIF	BUFOVF				FERR	PERR	DATA[8]
0x02	TXDATAL	7:0	DATA[7:0]							
0x03	TXDATAH	7:0								DATA[8]
0x04	STATUS	7:0	RXCIF	TXCIF	DREIF	RXSIF	ISFIF		BDF	WFB
0x05	CTRLA	7:0	RXCIE	TXCIE	DREIE	RXSIE	LBME	ABEIE		RS485
0x06	CTRLB	7:0	RXEN	TXEN		SFDEN	ODME	RXMODE[1:0]		MPCM
0x07	CTRLC	7:0	CMODE[1:0]		PMODE[1:0]		SBMODE	CHSIZE[2:0]		
0x07	CTRLC	7:0	CMODE[1:0]					UDORD	UCPHA	
0x08	BAUD	7:0	BAUD[7:0]							
		15:8	BAUD[15:8]							
0x0A	CTRLD	7:0	ABW[1:0]							
0x0B	DBGCTRL	7:0								DBGRUN
0x0C	EVCTRL	7:0								IREI
0x0D	TXPLCTRL	7:0	TXPL[7:0]							
0x0E	RXPLCTRL	7:0		RXPL[6:0]						

25.5 Register Description

chanhvinh.com

25.5.1 Receiver Data Register Low Byte

Name: RXDATAL
Offset: 0x00
Reset: 0x00
Property: -

This register contains the eight LSbs of the data received by the USART receiver. The USART receiver is double-buffered, and this register always represents the data for the oldest received frame. If the data for only one frame is present in the receive buffer, this register contains that data.

The buffer shifts out the data either when RXDATAL or RXDATAH is read, depending on the configuration. The register, which does not lead to data being shifted, must be read first to be able to read both bytes before shifting.

When the Character Size (CHSIZE) bit field in the Control C (USARTn.CTRLC) register is configured to 9-bit (low byte first), a read of RXDATAH shifts the receive buffer, or else, RXDATAL shifts the buffer.

Bit	7	6	5	4	3	2	1	0
	DATA[7:0]							
Access	R	R	R	R	R	R	R	R
Reset	0	0	0	0	0	0	0	0

Bits 7:0 – DATA[7:0] Receiver Data Register

chanhvinh.com

25.5.2 Receiver Data Register High Byte

Name: RXDATAH
Offset: 0x01
Reset: 0x00
Property: -

This register contains the MSb of the data received by the USART receiver, as well as status bits reflecting the status of the received data frame. The USART receiver is double-buffered, and this register always represents the data and status bits for the oldest received frame. If the data and status bits for only one frame is present in the receive buffer, this register contains that data.

The buffer shifts out the data either when RXDATAL or RXDATAH is read, depending on the configuration. The register, which does not lead to data being shifted, must be read first to be able to read both bytes before shifting.

When the Character Size (CHSIZE) bits in the Control C (USARTn.CTRLC) register is configured to 9-bit (low byte first), a read of RXDATAH shifts the receive buffer, or else, RXDATAL shifts the buffer.

Bit	7	6	5	4	3	2	1	0
	RXCIF	BUFOVF				FERR	PERR	DATA[8]
Access	R	R				R	R	R
Reset	0	0				0	0	0

Bit 7 – RXCIF USART Receive Complete Interrupt Flag
This flag is set when there are unread data in the receive buffer and cleared when the receive buffer is empty.

Bit 6 – BUFOVF Buffer Overflow
This flag is set if a buffer overflow is detected. A buffer overflow occurs when the receive buffer is full, a new frame is waiting in the receive shift register, and a new Start bit is detected. This flag is cleared when the Receiver Data (USARTn.RXDATAL and USARTn.RXDATAH) registers are read.
This flag is not used in the Host SPI mode of operation.

Bit 2 – FERR Frame Error
This flag is set if the first Stop bit is '0' and cleared when it is correctly read as '1'.
This flag is not used in the Host SPI mode of operation.

Bit 1 – PERR Parity Error
This flag is set if parity checking is enabled and the received data has a parity error, or else, this flag cleared. For details on parity calculation, refer to 25.3.4.1 Parity.
This flag is not used in the Host SPI mode of operation.

Bit 0 – DATA[8] Receiver Data Register
When using a 9-bit frame size, this bit holds the ninth bit (MSb) of the received data.
When the Receiver Mode (RXMODE) bit field in the Control B (USARTn.CTRLB) register is configured to LIN Constrained Auto-Baud (LINAUTO) mode, this bit indicates if the received data are within the response space of a LIN frame. This bit is cleared if the received data are in the protected identifier field and is otherwise set.

chanhvinh.com

25.5.3 Transmit Data Register Low Byte

Name: TXDATAL
Offset: 0x02
Reset: 0x00
Property: -

The data written to this register is automatically loaded into the TX Buffer and through to the dedicated Shift register. The shift register outputs each of the bits serially to the TXD pin.

When using a 9-bit frame size, the ninth bit (MSb) must be written to the Transmit Data Register High Byte (USARTn.TXDATAH). In that case, the buffer shifts data either when the Transmit Data Register Low Byte (USARTn.TXDATAL) or the Transmit Data Register High Byte (USARTn.TXDATAH) is written, depending on the configuration. The register, which does not lead to data being shifted, must be written first to be able to write both registers before shifting.

When the Character Size (CHSIZE) bit field in the Control C (USARTn.CTRLC) register is configured to 9-bit (low byte first), a write of the Transmit Data Register High Byte shifts the transmit buffer. Otherwise, the Transmit Data Register Low Byte shifts the buffer.

This register may only be written when the Data Register Empty Interrupt Flag (DREIF) in the Status (USARTn.STATUS) register is set.

Bit	7	6	5	4	3	2	1	0
	DATA[7:0]							
Access	R/W	R/W	R/W	R/W	R/W	R/W	R/W	R/W
Reset	0	0	0	0	0	0	0	0

Bits 7:0 – DATA[7:0] Transmit Data Register Low Byte

chanhvinh.com

25.5.4 Transmit Data Register High Byte

Name: TXDATAH
Offset: 0x03
Reset: 0x00
Property: -

The data written to this register is automatically loaded into the TX Buffer and through to the dedicated Shift register. The shift register outputs each of the bits serially to the TXD pin.

When using a 9-bit frame size, the ninth bit (MSb) must be written to the Transmit Data Register High Byte (USARTn.TXDATAH). In that case, the buffer shifts data either when the Transmit Data Register Low Byte (USARTn.TXDATAL) or the Transmit Data Register High Byte (USARTn.TXDATAH) is written, depending on the configuration. The register, which does not lead to data being shifted, must be written first to be able to write both registers before shifting.

When the Character Size (CHSIZE) bit field in the Control C (USARTn.CTRLC) register is configured to 9-bit (low byte first), a write of the Transmit Data Register High Byte shifts the transmit buffer. Otherwise, the Transmit Data Register Low Byte shifts the buffer.

This register may only be written when the Data Register Empty Interrupt Flag (DREIF) in the Status (USARTn.STATUS) register is set.

Bit	7	6	5	4	3	2	1	0
								DATA[8]
Access								R/W
Reset								0

Bit 0 – DATA[8] Transmit Data Register High Byte

chanhvinh.com

25.5.5 USART Status Register

Name: STATUS
Offset: 0x04
Reset: 0x00
Property: -

Bit	7	6	5	4	3	2	1	0
	RXCIF	TXCIF	DREIF	RXSIF	ISFIF		BDF	WFB
Access	R	R/W	R	R/W	R/W		R/W	W
Reset	0	0	1	0	0		0	0

Bit 7 – RXCIF USART Receive Complete Interrupt Flag
This flag is set when there are unread data in the receive buffer and cleared when the receive buffer is empty.

Bit 6 – TXCIF USART Transmit Complete Interrupt Flag
This flag is set when the entire frame in the Transmit Shift register has been shifted out, and there are no new data in the transmit buffer (TXDATAL and TXDATAH) registers. It is cleared by writing a '1' to it.

Bit 5 – DREIF USART Data Register Empty Interrupt Flag
This flag is set when the Transmit Data (USARTn.TXDATAL and USARTn.TXDATAH) registers are empty and cleared when they contain data that has not yet been moved into the transmit shift register.

Bit 4 – RXSIF USART Receive Start Interrupt Flag
This flag is set when Start-of-Frame detection is enabled, the device is in Standby sleep mode, and a valid start bit is detected. It is cleared by writing a '1' to it.
This flag is not used in the Host SPI mode operation.

Bit 3 – ISFIF Inconsistent Synchronization Field Interrupt Flag
This flag is set if an auto-baud mode is enabled, and the synchronization field is too short or too long to give a valid baud setting. It will also be set when USART is set to LINAUTO mode, and the SYNC character differs from data value 0x55. This flag is cleared by writing a '1' to it. See the *Auto-Baud* section for more information.

Bit 1 – BDF Break Detected Flag
This flag is set if an auto-baud mode is enabled and a valid break and synchronization character is detected, and is cleared when the next data are received. It can also be cleared by writing a '1' to it. See the *Auto-Baud* section for more information.

Bit 0 – WFB Wait For Break
This bit controls whether the Wait For Break feature is enabled or not. Refer to the *Auto-Baud* section for more information.

Value	Description
0	Wait For Break is disabled
1	Wait For Break is enabled

chanhvinh.com

25.5.6 Control A

Name: CTRLA
Offset: 0x05
Reset: 0x00
Property: -

Bit	7	6	5	4	3	2	1	0
	RXCIE	TXCIE	DREIE	RXSIE	LBME	ABEIE		RS485
Access	R/W	R/W	R/W	R/W	R/W	R/W		R/W
Reset	0	0	0	0	0	0		0

Bit 7 – RXCIE Receive Complete Interrupt Enable
This bit controls whether the Receive Complete Interrupt is enabled or not. When enabled, the interrupt will be triggered when the RXCIF bit in the USARTn.STATUS register is set.

Value	Description
0	The Receive Complete Interrupt is disabled
1	The Receive Complete Interrupt is enabled

Bit 6 – TXCIE Transmit Complete Interrupt Enable
This bit controls whether the Transmit Complete Interrupt is enabled or not. When enabled, the interrupt will be triggered when the TXCIF bit in the USARTn.STATUS register is set.

Value	Description
0	The Transmit Complete Interrupt is disabled
1	The Transmit Complete Interrupt is enabled

Bit 5 – DREIE Data Register Empty Interrupt Enable
This bit controls whether the Data Register Empty Interrupt is enabled or not. When enabled, the interrupt will be triggered when the DREIF bit in the USARTn.STATUS register is set.

Value	Description
0	The Data Register Empty Interrupt is disabled
1	The Data Register Empty Interrupt is enabled

Bit 4 – RXSIE Receiver Start Frame Interrupt Enable
This bit controls whether the Receiver Start Frame Interrupt is enabled or not. When enabled, the interrupt will be triggered when the RXSIF bit in the USARTn.STATUS register is set.

Value	Description
0	The Receiver Start Frame Interrupt is disabled
1	The Receiver Start Frame Interrupt is enabled

Bit 3 – LBME Loop-Back Mode Enable
This bit controls whether the Loop-back mode is enabled or not. When enabled, an internal connection between the TXD pin and the USART receiver is created, and the input from the RXD pin to the USART receiver is disconnected.

Value	Description
0	Loop-back mode is disabled
1	Loop-back mode is enabled

Bit 2 – ABEIE Auto-Baud Error Interrupt Enable
This bit controls whether the Auto-baud Error Interrupt is enabled or not. When enabled, the interrupt will be triggered when the ISFIF bit in the USARTn.STATUS register is set.

Value	Description
0	The Auto-Baud Error Interrupt is disabled
1	The Auto-Baud Error Interrupt is enabled

Bit 0 – RS485 RS-485 Mode
This bit controls whether the RS-485 mode is enabled or not. Refer to section RS-485 Mode for more information.

© 2021 Microchip Technology Inc.
and its subsidiaries

chanhvinh.com

Value	Description
0	RS-485 mode is disabled
1	RS-485 mode is enabled

chanhvinh.com

chanhvinh.com

25.5.7 Control B

Name: CTRLB
Offset: 0x06
Reset: 0x00
Property: -

Bit	7	6	5	4	3	2	1	0
	RXEN	TXEN		SFDEN	ODME	RXMODE[1:0]		MPCM
Access	R/W	R/W		R/W	R/W	R/W	R/W	R/W
Reset	0	0		0	0	0	0	0

Bit 7 – RXEN Receiver Enable
This bit controls whether the USART receiver is enabled or not. Refer to 25.3.2.4.2 Disabling the Receiver for more information.

Value	Description
0	The USART receiver is disabled
1	The USART receiver is enabled

Bit 6 – TXEN Transmitter Enable
This bit controls whether the USART transmitter is enabled or not. Refer to 25.3.2.3.1 Disabling the Transmitter for more information.

Value	Description
0	The USART transmitter is disabled
1	The USART transmitter is enabled

Bit 4 – SFDEN Start-of-Frame Detection Enable
This bit controls whether the USART Start-of-Frame Detection mode is enabled or not. Refer to 25.3.4.2 Start-of-Frame Detection for more information.

Value	Description
0	The USART Start-of-Frame Detection mode is disabled
1	The USART Start-of-Frame Detection mode is enabled

Bit 3 – ODME Open Drain Mode Enable
This bit controls whether Open Drain mode is enabled or not. See the One-Wire Mode section for more information.

Value	Description
0	Open Drain mode is disabled
1	Open Drain mode is enabled

Bits 2:1 – RXMODE[1:0] Receiver Mode
Writing this bit field selects the receiver mode of the USART.

- Writing the bits to 0x00 enables Normal-Speed (NORMAL) mode. When the USART Communication Mode (CMODE) bit field in the Control C (USARTn.CTRLC) register is configured to Asynchronous USART (ASYNCHRONOUS) or Infrared Communication (IRCOM), always write the RXMODE bit field to 0x00.
- Writing the bits to 0x01 enables Double-Speed (CLK2X) mode. Refer to 25.3.3.2.4 Double-Speed Operation for more information.
- Writing the bits to 0x02 enables Generic Auto-Baud (GENAUTO) mode. Refer to the *Auto-Baud* section for more information.
- Writing the bits to 0x03 enables Lin Constrained Auto-Baud (LINAUTO) mode. Refer to the *Auto-Baud* section for more information.

Value	Name	Description
0x00	NORMAL	Normal-Speed mode
0x01	CLK2X	Double-Speed mode
0x02	GENAUTO	Generic Auto-Baud mode
0x03	LINAUTO	LIN Constrained Auto-Baud mode

chanhvinh.com

Bit 0 – MPCM Multi-Processor Communication Mode
This bit controls whether the Multi-Processor Communication mode is enabled or not. Refer to 25.3.4.3 Multiprocessor Communication for more information.

Value	Description
0	Multi-Processor Communication mode is disabled
1	Multi-Processor Communication mode is enabled

chanhvinh.com

chanhvinh.com

25.5.8 Control C - Normal Mode

Name: CTRLC
Offset: 0x07
Reset: 0x03
Property: -

This register description is valid for all modes except the Host SPI mode. When the USART Communication Mode (CMODE) bit field in this register is written to 'MSPI', see CTRLC - Host SPI mode for the correct description.

Bit	7	6	5	4	3	2	1	0
	CMODE[1:0]		PMODE[1:0]		SBMODE	CHSIZE[2:0]		
Access	R/W	R/W	R/W	R/W	R/W	R/W	R/W	R/W
Reset	0	0	0	0	0	0	1	1

Bits 7:6 – CMODE[1:0] USART Communication Mode
This bit field selects the communication mode of the USART.
Writing a 0x03 to these bits alters the available bit fields in this register. See CTRLC - Host SPI mode.

Value	Name	Description
0x00	ASYNCHRONOUS	Asynchronous USART
0x01	SYNCHRONOUS	Synchronous USART
0x02	IRCOM	Infrared Communication
0x03	MSPI	Host SPI

Bits 5:4 – PMODE[1:0] Parity Mode
This bit field enables and selects the type of parity generation. See 25.3.4.1 Parity for more information.

Value	Name	Description
0x0	DISABLED	Disabled
0x1	-	Reserved
0x2	EVEN	Enabled, even parity
0x3	ODD	Enabled, odd parity

Bit 3 – SBMODE Stop Bit Mode
This bit selects the number of Stop bits to be inserted by the transmitter.
The receiver ignores this setting.

Value	Description
0	1 Stop bit
1	2 Stop bits

Bits 2:0 – CHSIZE[2:0] Character Size
This bit field selects the number of data bits in a frame. The receiver and transmitter use the same setting. For 9BIT character size, the order of which byte to read or write first, low or high byte of RXDATA or TXDATA, can be configured.

Value	Name	Description
0x00	5BIT	5-bit
0x01	6BIT	6-bit
0x02	7BIT	7-bit
0x03	8BIT	8-bit
0x04	-	Reserved
0x05	-	Reserved
0x06	9BITL	9-bit (Low byte first)
0x07	9BITH	9-bit (High byte first)

chanhvinh.com

25.5.9 Control C - Host SPI Mode

Name: CTRLC
Offset: 0x07
Reset: 0x00
Property: -

This register description is valid only when the USART is in Host SPI mode (CMODE written to MSPI). For other CMODE values, see CTRLC - Normal Mode.

See 25.3.3.1.3 USART in Host SPI Mode for a full description of the Host SPI mode operation.

Bit	7	6	5	4	3	2	1	0
	CMODE[1:0]					UDORD	UCPHA	
Access	R/W	R/W				R/W	R/W	
Reset	0	0				0	0	

Bits 7:6 – CMODE[1:0] USART Communication Mode
This bit field selects the communication mode of the USART.
Writing a value different than `0x03` to these bits alters the available bit fields in this register. See CTRLC - Normal Mode.

Value	Name	Description
0x00	ASYNCHRONOUS	Asynchronous USART
0x01	SYNCHRONOUS	Synchronous USART
0x02	IRCOM	Infrared Communication
0x03	MSPI	Host SPI

Bit 2 – UDORD USART Data Order
This bit controls the frame format. The receiver and transmitter use the same setting. Changing the setting of the UDORD bit will corrupt all ongoing communication for both the receiver and the transmitter.

Value	Description
0	MSb of the data word is transmitted first
1	LSb of the data word is transmitted first

Bit 1 – UCPHA USART Clock Phase
This bit controls the phase of the interface clock. Refer to the Clock Generation section for more information.

Value	Description
0	Data are sampled on the leading (first) edge
1	Data are sampled on the trailing (last) edge

© 2021 Microchip Technology Inc. and its subsidiaries

chanhvinh.com

25.5.10 Baud Register

Name: BAUD
Offset: 0x08
Reset: 0x00
Property: -

The USARTn.BAUDL and USARTn.BAUDH register pair represents the 16-bit value, USARTn.BAUD. The low byte [7:0] (suffix L) is accessible at the original offset. The high byte [15:8] (suffix H) can be accessed at offset + `0x01`.

Ongoing transmissions of the transmitter and receiver will be corrupted if the baud rate is changed. Writing to this register will trigger an immediate update of the baud rate prescaler. For more information on how to set the baud rate, see Table 25-1.

Bit	15	14	13	12	11	10	9	8
	BAUD[15:8]							
Access	R/W	R/W	R/W	R/W	R/W	R/W	R/W	R/W
Reset	0	0	0	0	0	0	0	0

Bit	7	6	5	4	3	2	1	0
	BAUD[7:0]							
Access	R/W	R/W	R/W	R/W	R/W	R/W	R/W	R/W
Reset	0	0	0	0	0	0	0	0

Bits 15:8 – BAUD[15:8] USART Baud Rate High Byte
This bit field holds the MSB of the 16-bit Baud register.

Bits 7:0 – BAUD[7:0] USART Baud Rate Low Byte
This bit field holds the LSB of the 16-bit Baud register.

© 2021 Microchip Technology Inc.
and its subsidiaries

chanhvinh.com

25.5.11 Control D

Name: CTRLD
Offset: 0x0A
Reset: 0x00
Property: -

Bit	7	6	5	4	3	2	1	0
	ABW[1:0]							
Access	R/W	R/W						
Reset	0	0						

Bits 7:6 – ABW[1:0] Auto-Baud Window Size
These bits control the tolerance for the difference between the baud rates between the two synchronizing devices when using Lin Constrained Auto-baud mode. The tolerance is based on the number of baud samples between every two bits. When baud rates are identical, there must be 32 baud samples between each bit pair since each bit is sampled 16 times.

Value	Name	Description
0x00	WDW0	32±6 (18% tolerance)
0x01	WDW1	32±5 (15% tolerance)
0x02	WDW2	32±7 (21% tolerance)
0x03	WDW3	32±8 (25% tolerance)

© 2021 Microchip Technology Inc.
and its subsidiaries

chanhvinh.com

25.5.12 Debug Control Register

Name: DBGCTRL
Offset: 0x0B
Reset: 0x00
Property: -

Bit	7	6	5	4	3	2	1	0
								DBGRUN
Access								R/W
Reset								0

Bit 0 – DBGRUN Debug Run

Value	Description
0	The peripheral is halted in Break Debug mode and ignores events
1	The peripheral will continue to run in Break Debug mode when the CPU is halted

chanhvinh.com

25.5.13 IrDA Control Register

Name: EVCTRL
Offset: 0x0C
Reset: 0x00
Property: -

Bit	7	6	5	4	3	2	1	0
								IREI
Access								R/W
Reset								0

Bit 0 – IREI IrDA Event Input Enable
This bit controls whether the IrDA event input is enabled or not. See 25.3.3.2.7 IRCOM Mode of Operation for more information.

Value	Description
0	IrDA Event input is enabled
1	IrDA Event input is disabled

chanhvinh.com

25.5.14 IRCOM Transmitter Pulse Length Control Register

Name: TXPLCTRL
Offset: 0x0D
Reset: 0x00
Property: -

Bit	7	6	5	4	3	2	1	0
	TXPL[7:0]							
Access	R/W	R/W	R/W	R/W	R/W	R/W	R/W	R/W
Reset	0	0	0	0	0	0	0	0

Bits 7:0 – TXPL[7:0] Transmitter Pulse Length
This 8-bit value sets the pulse modulation scheme for the transmitter. Setting this register will only have an effect if IRCOM mode is selected by the USART, and it must be configured before the USART transmitter is enabled (TXEN).

Value	Description
0x00	3/16 of the baud rate period pulse modulation is used
0x01-0xFE	Fixed pulse length coding is used. The 8-bit value sets the number of peripheral clock periods for the pulse. The start of the pulse will be synchronized with the rising edge of the baud rate clock.
0xFF	Pulse coding disabled. RX and TX signals pass through the IRCOM module unaltered. This enables other features through the IRCOM module, such as half-duplex USART, loop-back testing, and USART RX input from an event channel.

chanhvinh.com

25.5.15 IRCOM Receiver Pulse Length Control Register

Name: RXPLCTRL
Offset: 0x0E
Reset: 0x00
Property: -

Bit	7	6	5	4	3	2	1	0
		RXPL[6:0]						
Access		R/W	R/W	R/W	R/W	R/W	R/W	R/W
Reset		0	0	0	0	0	0	0

Bits 6:0 – RXPL[6:0] Receiver Pulse Length
This 7-bit value sets the filter coefficient for the IRCOM transceiver. Setting this register will only have an effect if IRCOM mode is selected by a USART, and it must be configured before the USART receiver is enabled (RXEN).

Value	Description
0x00	Filtering disabled
0x01-0x7F	Filtering enabled. The value of RXPL+1 represents the number of samples required for a received pulse to be accepted.

chanhvinh.com

chanhvinh.com

26. SPI - Serial Peripheral Interface

26.1 Features

- Full Duplex, Three-Wire Synchronous Data Transfer
- Host or Client Operation
- LSb First or MSb First Data Transfer
- Seven Programmable Bit Rates
- End of Transmission Interrupt Flag
- Write Collision Flag Protection
- Wake-up from Idle Mode
- Double-Speed (CK/2) Host SPI Mode

26.2 Overview

The Serial Peripheral Interface (SPI) is a high-speed synchronous data transfer interface using three or four pins. It allows full-duplex communication between an AVR® device and peripheral devices or between several microcontrollers. The SPI peripheral can be configured as either host or client. The host initiates and controls all data transactions.

The interconnection between host and client devices with SPI is shown in the block diagram. The system consists of two shift registers and a server clock generator. The SPI host initiates the communication cycle by pulling the desired client's Client Select ($\overline{SS}$) signal low. The host and client prepare the data to be sent to their respective shift registers, and the host generates the required clock pulses on the SCK line to exchange data. Data are always shifted from host to client on the host output, client input (MOSI) line, and from client to host on the host input, client output (MISO) line.

26.2.1 Block Diagram

Figure 26-1. SPI Block Diagram

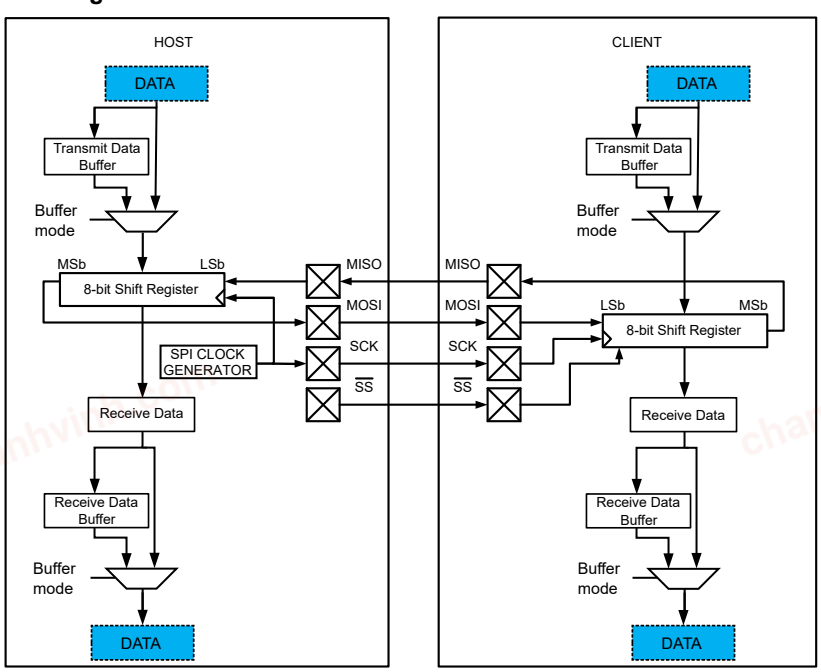

The SPI is built around an 8-bit shift register that will shift data out and in at the same time. The Transmit Data register and the Receive Data register are not physical registers but are mapped to other registers when written or

chanhvinh.com

read: Writing the Transmit Data (SPIn.DATA) register will write the shift register in Normal mode and the Transmit Buffer register in Buffer mode. Reading the Receive Data (SPIn.DATA) register will read the Receive Data register in Normal mode and the Receive Data Buffer in Buffer mode.

In Host mode, the SPI has a clock generator to generate the SCK clock. In Client mode, the received SCK clock is synchronized and sampled to trigger the shifting of data in the shift register.

26.2.2 Signal Description

Table 26-1. Signals in Host and Client Mode

Signal	Description	Pin Configuration	
		Host Mode	Client Mode
MOSI	Host Out Client In	User defined(1)	Input
MISO	Host In Client Out	Input	User defined(1,2)
SCK	Serial Clock	User defined(1)	Input
$\overline{SS}$	Client Select	User defined(1)	Input

Notes:

1. If the pin data direction is configured as output, the pin level is controlled by the SPI.
2. If the SPI is in Client mode and the MISO pin data direction is configured as output, the $\overline{SS}$ pin controls the MISO pin output in the following way:
   - If the $\overline{SS}$ pin is driven low, the MISO pin is controlled by the SPI
   - If the $\overline{SS}$ pin is driven high, the MISO pin is tri-stated

When the SPI module is enabled, the pin data direction for the signals marked with “Input” in Table 26-1 is overridden.

26.3 Functional Description

26.3.1 Initialization

Initialize the SPI to a basic functional state by following these steps:

1. Configure the $\overline{SS}$ pin in the port peripheral.
2. Select the SPI host/client operation by writing the Host/Client Select (MASTER) bit in the Control A (SPIn.CTRLA) register.
3. In Host mode, select the clock speed by writing the Prescaler (PRESC) bits and the Clock Double (CLK2X) bit in SPIn.CTRLA.
4. Optional: Select the Data Transfer mode by writing to the MODE bits in the Control B (SPIn.CTRLB) register.
5. Optional: Write the Data Order (DORD) bit in SPIn.CTRLA.
6. Optional: Set up the Buffer mode by writing the BUFEN and BUFWR bits in the Control B (SPIn.CTRLB) register.
7. Optional: To disable the multi-host support in Host mode, write ‘1’ to the Client Select Disable (SSD) bit in SPIn.CTRLB.
8. Enable the SPI by writing a ‘1’ to the ENABLE bit in SPIn.CTRLA.

26.3.2 Operation

26.3.2.1 Host Mode Operation

When the SPI is configured in Host mode, a write to the SPIn.DATA register will start a new transfer. The SPI host can operate in two modes, Normal and Buffer, as explained below.

26.3.2.1.1 Normal Mode

In Normal mode, the system is single-buffered in the transmit direction and double-buffered in the receive direction. This influences the data handling in the following ways:

chanhvinh.com

1. New bytes to be sent cannot be written to the DATA (SPIn.DATA) register before the entire transfer has been completed. A premature write will cause corruption of the transmitted data, and the Write Collision (WRCOL) flag in SPIn.INTFLAGS will be set.
2. Received bytes are written to the Receive Data Buffer register immediately after the transmission is completed.
3. The Receive Data Buffer register has to be read before the next transmission is completed, or the data will be lost. This register is read by reading SPIn.DATA.
4. The Transmit Data Buffer and Receive Data Buffer registers are not used in Normal mode.

After a transfer has been completed, the Interrupt Flag (IF) will be set in the Interrupt Flags (SPIn.INTFLAGS) register. This will cause the corresponding interrupt to be executed if this interrupt and the global interrupts are enabled. Setting the Interrupt Enable (IE) bit in the Interrupt Control (SPIn.INTCTRL) register will enable the interrupt.

26.3.2.1.2 Buffer Mode

The Buffer mode is enabled by writing the BUFEN bit in the SPIn.CTRLB register to '1'. The BUFWR bit in SPIn.CTRLB does not affect Host mode. In Buffer mode, the system is double-buffered in the transmit direction and triple-buffered in the receive direction. This influences the data handling in the following ways:

1. New bytes can be written to the DATA (SPIn.DATA) register as long as the Data Register Empty Interrupt Flag (DREIF) in the Interrupt Flag (SPIn.INTFLAGS) register is set. The first write will be transmitted right away, and the following write will go to the Transmit Data Buffer register.
2. A received byte is placed in a two-entry Receive First-In, First-Out (RX FIFO) queue comprised of the Receive Data register and Receive Data Buffer immediately after the transmission is completed.
3. The DATA register is used to read from the RX FIFO. The RX FIFO must be read at least every second transfer to avoid any loss of data.

When both the shift register and the Transmit Data Buffer register become empty, the Transfer Complete Interrupt Flag (TXCIF) in the Interrupt Flags (SPIn.INTFLAGS) register will be set. This will cause the corresponding interrupt to be executed if this interrupt and the global interrupts are enabled. Setting the Transfer Complete Interrupt Enable (TXCIE) in the Interrupt Control (SPIn.INTCTRL) register enables the Transfer Complete Interrupt.

26.3.2.1.3 $\overline{SS}$ Pin Functionality in Host Mode - Multi-Host Support

In Host mode, the Client Select Disable (SSD) bit in the Control B (SPIn.CTRLB) register controls how the SPI uses the $\overline{SS}$ pin.

- If SSD in SPIn.CTRLB is '0', the SPI can use the $\overline{SS}$ pin to transition from Host to Client mode. This allows multiple SPI hosts on the same SPI bus.
- If SSD in SPIn.CTRLB is '0', and the $\overline{SS}$ pin is configured as an output pin, it can be used as a regular I/O pin or by other peripheral modules and will not affect the SPI system
- If SSD in SPIn.CTRLB is '1', the SPI does not use the $\overline{SS}$ pin. It can be used as a regular I/O pin or by other peripheral modules.

If the SSD bit in SPIn.CTRLB is '0', and the $\overline{SS}$ is configured as an input pin, the $\overline{SS}$ pin must be held high to ensure Host SPI operation. A low level will be interpreted as another Host is trying to take control of the bus. This will switch the SPI into Client mode, and the hardware of the SPI will perform the following actions:

1. The Host (MASTER) bit in the SPI Control A (SPIn.CTRLA) register is cleared, and the SPI system becomes a client. The direction of the SPI pins will be switched when the conditions in Table 26-2 are met.
2. The Interrupt Flag (IF) bit in the Interrupt Flags (SPIn.INTFLAGS) register will be set. If the interrupt is enabled and the global interrupts are enabled, the interrupt routine will be executed.

Table 26-2. Overview of the $\overline{SS}$ Pin Functionality when the SSD Bit in SPIn.CTRLB is '0'

$\overline{SS}$ Configuration	$\overline{SS}$ Pin-Level	Description
Input	High	Host activated (selected)
	Low	Host deactivated, switched to Client mode
Output	High	Host activated (selected)
	Low	

chanhvinh.com

Note: If the device is in Host mode and it cannot be ensured that the $\overline{SS}$ pin will stay high between two transmissions, the status of the Host (MASTER) bit in SPIn.CTRLA has to be checked before a new byte is written. After the Host bit has been cleared by a low level on the $\overline{SS}$ line, it must be set by the application to re-enable the SPI Host mode.

26.3.2.2 Client Mode

In Client mode, the SPI peripheral receives SPI clock and Client Select from a Host. Client mode supports three operational modes: One Normal mode and two configurations for the Buffered mode. In Client mode, the control logic will sample the incoming signal on the SCK pin. To ensure correct sampling of this clock signal, the minimum low and high periods must each be longer than two peripheral clock cycles.

26.3.2.2.1 Normal Mode

In Normal mode, the SPI peripheral will remain Idle as long as the $\overline{SS}$ pin is driven high. In this state, the software may update the contents of the DATA register, but the data will not be shifted out by incoming clock pulses on the SCK pin until the $\overline{SS}$ pin is driven low. If the $\overline{SS}$ pin is driven low, the client will start to shift out data on the first SCK clock pulse. When one byte has been completely shifted, the SPI Interrupt Flag (IF) in SPIn.INTFLAGS is set.

The user application may continue placing new data to be sent into the DATA register before reading the incoming data. New bytes to be sent cannot be written to the DATA register before the entire transfer has been completed. A premature write will be ignored, and the hardware will set the Write Collision (WRCOL) flag in SPIn.INTFLAGS.

When the $\overline{SS}$ pin is driven high, the SPI logic is halted, and the SPI client will not receive any new data. Any partially received packet in the shift register will be lost.

Figure 26-2 shows a transmission sequence in Normal mode. Notice how the value 0x45 is written to the DATA register but never transmitted.

Figure 26-2. SPI Timing Diagram in Normal Mode (Buffer Mode Not Enabled)

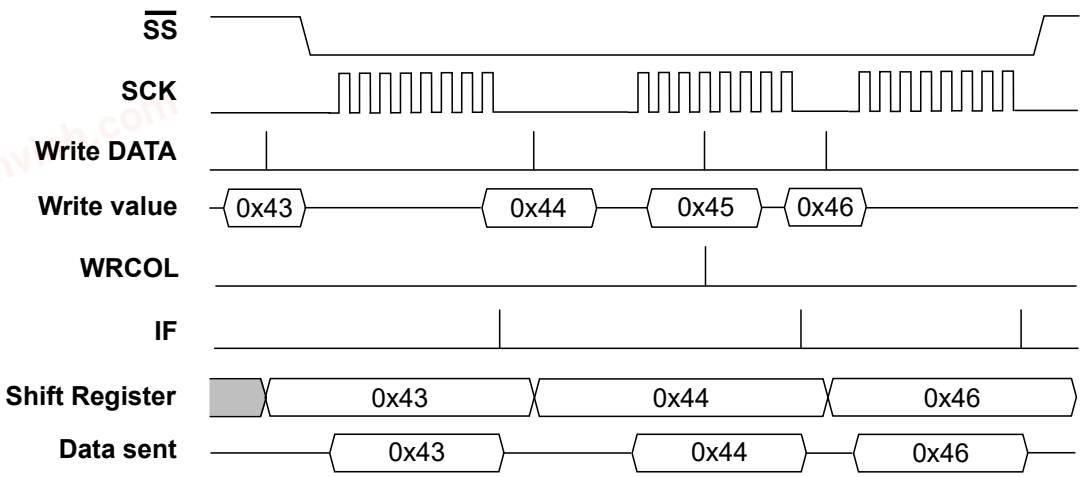

The figure above shows three transfers and one write to the DATA register while the SPI is busy with a transfer. This write will be ignored, and the Write Collision (WRCOL) flag in SPIn.INTFLAGS is set.

26.3.2.2.2 Buffer Mode

To avoid data collisions, the SPI peripheral can be configured in Buffered mode by writing a '1' to the Buffer Mode Enable (BUFEN) bit in the Control B (SPIn.CTRLB) register. In this mode, the SPI has additional interrupt flags and extra buffers. The extra buffers are shown in Figure 26-1. There are two different modes for the Buffer mode, selected with the Buffer mode Wait for Receive (BUFWR) bit. The two different modes are described below with timing diagrams.

Client Buffer Mode with Wait for Receive Bit Written to '0'

In Client mode, if the Buffer mode Wait for Receive (BUFWR) bit in SPIn.CTRLB is written to '0', a dummy byte will be sent before the transmission of user data starts. Figure 26-3 shows a transmission sequence with this configuration. Notice how the value 0x45 is written to the Data (SPIn.DATA) register but never transmitted.

chanhvinh.com

Figure 26-3. SPI Timing Diagram in Buffer Mode with BUFWR in SPIn.CTRLB Written to '0'

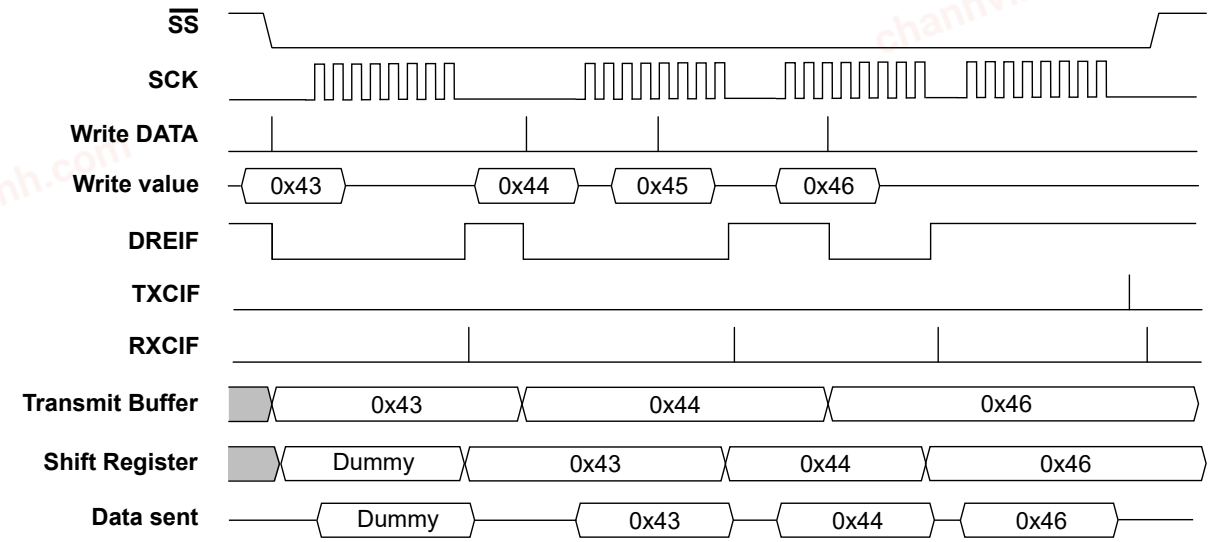

When the Wait for Receive (BUFWR) bit in SPIn.CTRLB is written to '0', all writes to the Data (SPIn.DATA) register go to the Transmit Data Buffer register. The figure above shows that the value 0x43 is written to the Data (SPIn.DATA) register but not immediately transferred to the shift register, so the first byte sent will be a dummy byte. The value of the dummy byte equals the values that were in the shift register at the same time. After the first dummy transfer is completed, the value 0x43 is transferred to the shift register. Then 0x44 is written to the Data (SPIn.DATA) register and goes to the Transmit Data Buffer register. A new transfer is started, and 0x43 will be sent. The value 0x45 is written to the Data (SPIn.DATA) register, but the Transmit Data Buffer register is not updated since it is already full containing 0x44 and the Data Register Empty Interrupt Flag (DREIF) in SPIn.INTFLAGS is low. The value 0x45 will be lost. After the transfer, the value 0x44 is moved to the shift register. During the next transfer, 0x46 is written to the Data (SPIn.DATA) register, and 0x44 is sent out. After the transfer is complete, 0x46 is copied into the shift register and sent out in the next transfer.

The DREIF goes low every time the Transmit Data Buffer register is written and goes high after a transfer when the previous value in the Transmit Data Buffer register is copied into the shift register. The Receive Complete Interrupt Flag (RXCIF) in SPIn.INTFLAGS is set one cycle after the DREIF goes high. The Transfer Complete Interrupt Flag is set one cycle after the Receive Complete Interrupt Flag is set when both the value in the shift register and in the Transmit Data Buffer register has been sent.

Client Buffer Mode with Wait for Receive Bit Written to '1'

In Client mode, if the Buffer mode Wait for Receive (BUFWR) bit in SPIn.CRTLB is written to '1', the transmission of user data starts as soon as the $\overline{SS}$ pin is driven low. Figure 26-4 shows a transmission sequence with this configuration. Notice how the value 0x45 is written to the Data (SPIn.DATA) register but never transmitted.

chanhvinh.com

Figure 26-4. SPI Timing Diagram in Buffer Mode with CTRLB.BUFWR Written to '1'

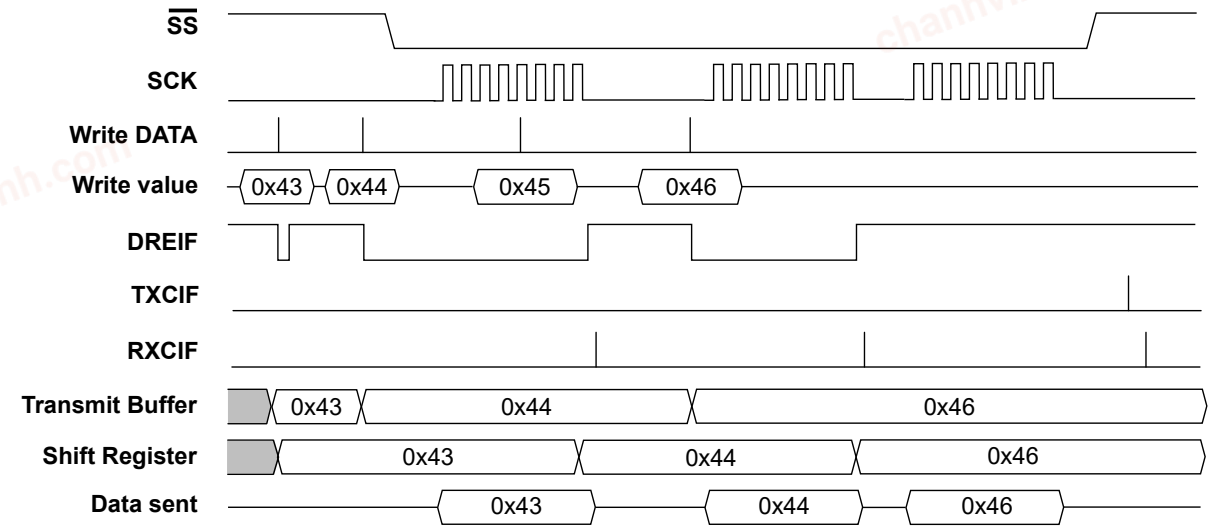

All writes to the Data (SPIn.DATA) register go to the Transmit Data Buffer register. The figure above shows that the value 0x43 is written to the Data (SPIn.DATA) register, and since the $\overline{SS}$ pin is high, it is copied to the shift register in the next cycle. The next write (0x44) will go to the Transmit Data Buffer register. During the first transfer, the value 0x43 will be shifted out. In the figure above, the value 0x45 is written to the Data (SPIn.DATA) register, but the Transmit Data Buffer register is not updated since the DREIF is low. After the transfer is completed, the value 0x44 from the Transmit Data Buffer register is copied to the shift register. The value 0x46 is written to the Transmit Data Buffer register. During the next two transfers, 0x44 and 0x46 are shifted out. The flags behave identically to the Buffer Mode Wait for Receive (BUFWR) bit in SPIn.CTRLB set to '0'.

26.3.2.2.3 $\overline{SS}$ Pin Functionality in Client Mode

The Client Select ($\overline{SS}$) pin plays a central role in the operation of the SPI. Depending on the SPI mode and the configuration of this pin, it can be used to activate or deactivate devices. The $\overline{SS}$ pin is used as a Chip Select pin.

In Client mode, the $\overline{SS}$, MOSI, and SCK are always inputs. The behavior of the MISO pin depends on the configured data direction of the pin in the port peripheral and the value of $\overline{SS}$. When the $\overline{SS}$ pin is driven low, the SPI is activated and will respond to received SCK pulses by clocking data out on MISO if the user has configured the data direction of the MISO pin as an output. When the $\overline{SS}$ pin is driven high, the SPI is deactivated, meaning that it will not receive incoming data. If the MISO pin data direction is configured as an output, the MISO pin will be tri-stated. Table 26-3 shows an overview of the $\overline{SS}$ pin functionality.

Table 26-3. Overview of the $\overline{SS}$ Pin Functionality

$\overline{SS}$ Configuration	$\overline{SS}$ Pin-Level	Description	MISO Pin Mode	
			Port Direction = Output	Port Direction = Input
Always Input	High	Client deactivated (deselected)	Tri-stated	Input
	Low	Client activated (selected)	Output	Input

Note: In Client mode, the SPI state machine will be reset when the $\overline{SS}$ pin is driven high. If the $\overline{SS}$ pin is driven high during a transmission, the SPI will stop sending and receiving data immediately and both data received and data sent must be considered lost. As the $\overline{SS}$ pin is used to signal the start and end of a transfer, it is useful for achieving packet/byte synchronization and keeping the Client bit counter synchronized with the host clock generator.

26.3.2.3 Data Modes

There are four combinations of SCK phase and polarity concerning the serial data. The desired combination is selected by writing to the MODE bits in the Control B (SPIn.CTRLB) register.

chanhvinh.com

The SPI data transfer formats are shown below. Data bits are shifted out and latched in on opposite edges of the SCK signal, ensuring sufficient time for data signals to stabilize.

The leading edge is the first clock edge of a clock cycle. The trailing edge is the last clock edge of a clock cycle.

Figure 26-5. SPI Data Transfer Modes

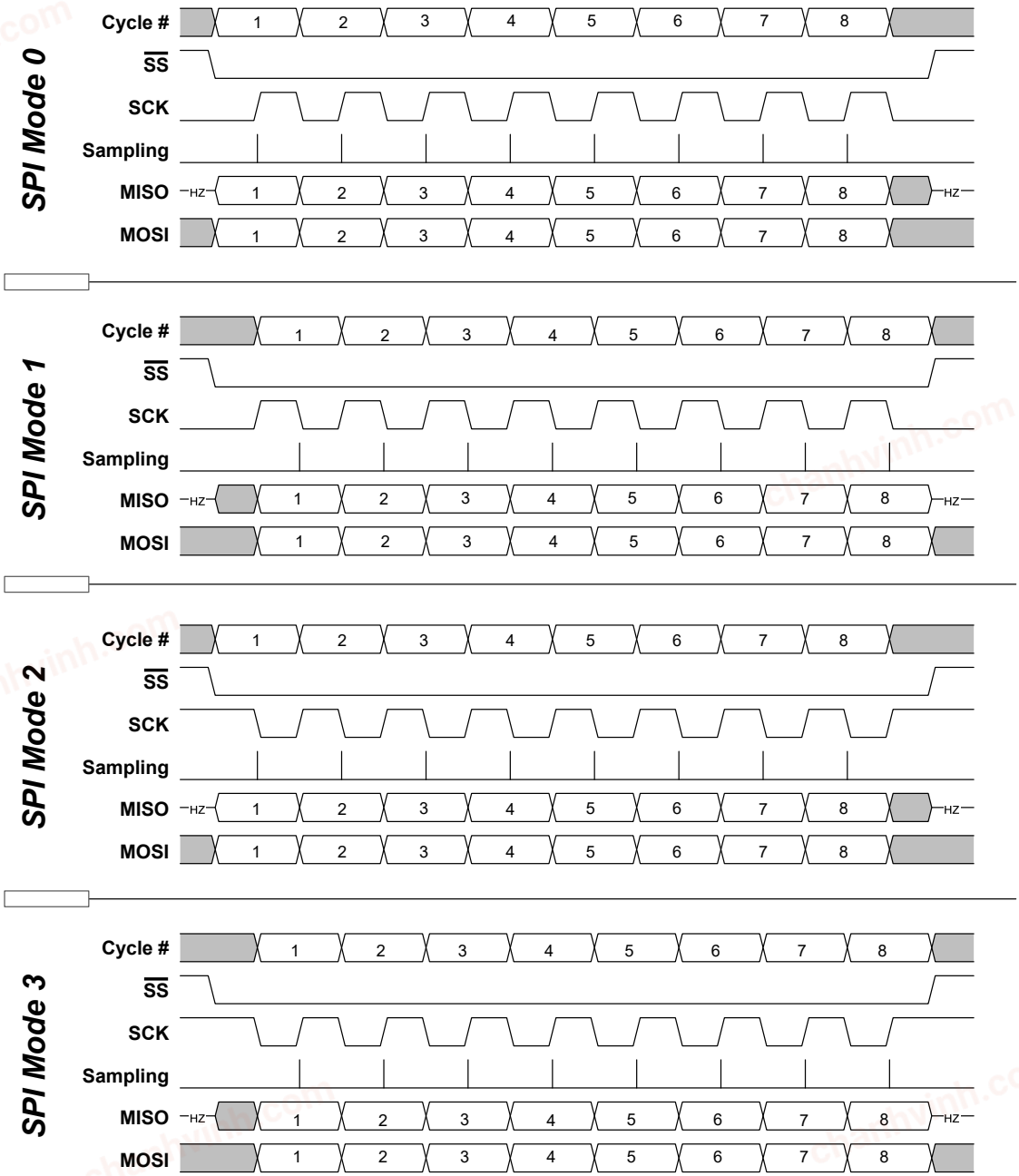

26.3.2.4 Events

The SPI can generate the following events:

chanhvinh.com

Table 26-4. Event Generators in SPI

Generator Name		Description	Event Type	Generating Clock Domain	Length of Event
Module	Event				
SPIn	SCK	SPI Host clock	Level	CLK_PER	Minimum two CLK_PER periods

The SPI has no event users.

Refer to the *Event System* section for more details regarding event types and Event System configuration.

26.3.2.5 Interrupts

Table 26-5. Available Interrupt Vectors and Sources

Name	Vector Description	Conditions	
		Normal Mode	Buffer Mode
SPIn	SPI interrupt	• IF: Interrupt Flag interrupt • WRCOL: Write Collision interrupt	• SSI: Client Select Trigger Interrupt • DRE: Data Register Empty interrupt • TXC: Transfer Complete interrupt • RXC: Receive Complete interrupt

When an interrupt condition occurs, the corresponding interrupt flag is set in the peripheral's Interrupt Flags (*peripheral*.INTFLAGS) register.

An interrupt source is enabled or disabled by writing to the corresponding enable bit in the peripheral's Interrupt Control (*peripheral*.INTCTRL) register.

An interrupt request is generated when the corresponding interrupt source is enabled, and the interrupt flag is set. The interrupt request remains active until the interrupt flag is cleared. See the peripheral's INTFLAGS register for details on how to clear interrupt flags.

chanhvinh.com

26.4 Register Summary

Offset	Name	Bit Pos.	7	6	5	4	3	2	1	0
0x00	CTRLA	7:0		DORD	MASTER	CLK2X		PRESC[1:0]		ENABLE
0x01	CTRLB	7:0	BUFEN	BUFWR				SSD	MODE[1:0]	
0x02	INTCTRL	7:0	RXCIE	TXCIE	DREIE	SSIE				IE
0x03	INTFLAGS	7:0	IF	WRCOL						
0x03	INTFLAGS	7:0	RXCIF	TXCIF	DREIF	SSIF				BUFOVF
0x04	DATA	7:0	DATA[7:0]							

26.5 Register Description

chanhvinh.com

26.5.1 Control A

Name: CTRLA
Offset: 0x00
Reset: 0x00
Property: -

Bit	7	6	5	4	3	2	1	0
		DORD	MASTER	CLK2X		PRESC[1:0]		ENABLE
Access		R/W	R/W	R/W		R/W	R/W	R/W
Reset		0	0	0		0	0	0

Bit 6 – DORD Data Order

Value	Description
0	The MSb of the data word is transmitted first
1	The LSb of the data word is transmitted first

Bit 5 – MASTER Host/Client Select
This bit selects the desired SPI mode.
If $\overline{SS}$ is configured as input and driven low while this bit is '1', then this bit is cleared, and the IF in SPIn.INTFLAGS is set. The user has to write MASTER = 1 again to re-enable SPI Host mode.
This behavior is controlled by the Client Select Disable (SSD) bit in SPIn.CTRLB.

Value	Description
0	SPI Client mode selected
1	SPI Host mode selected

Bit 4 – CLK2X Clock Double
When this bit is written to '1', the SPI speed (SCK frequency, after internal prescaler) is doubled in Host mode.

Value	Description
0	SPI speed (SCK frequency) is not doubled
1	SPI speed (SCK frequency) is doubled in Host mode

Bits 2:1 – PRESC[1:0] Prescaler
This bit field controls the SPI clock rate configured in Host mode. These bits have no effect in Client mode. The relationship between SCK and the peripheral clock frequency (f_{CLK_PER}) is shown below.
The output of the SPI prescaler can be doubled by writing the CLK2X bit to '1'.

Value	Name	Description
0x0	DIV4	CLK_PER/4
0x1	DIV16	CLK_PER/16
0x2	DIV64	CLK_PER/64
0x3	DIV128	CLK_PER/128

Bit 0 – ENABLE SPI Enable

Value	Description
0	SPI is disabled
1	SPI is enabled

© 2021 Microchip Technology Inc. and its subsidiaries

chanhvinh.com

26.5.2 Control B

Name: CTRLB
Offset: 0x01
Reset: 0x00
Property: -

Bit	7	6	5	4	3	2	1	0
	BUFEN	BUFWR				SSD	MODE[1:0]	
Access	R/W	R/W				R/W	R/W	R/W
Reset	0	0				0	0	0

Bit 7 – BUFEN Buffer Mode Enable
Writing this bit to '1' enables Buffer mode. This will enable two receive buffers and one transmit buffer. Both will have separate interrupt flags, transmit complete and receive complete.

Bit 6 – BUFWR Buffer Mode Wait for Receive
When writing this bit to '0', the first data transferred will be a dummy sample.

Value	Description
0	One SPI transfer must be completed before the data are copied into the shift register
1	If writing to the Data register when the SPI is enabled and $\overline{SS}$ is high, the first write will go directly to the shift register

Bit 2 – SSD Client Select Disable
If this bit is set when operating as SPI Host (MASTER = 1 in SPIn.CTRLA), $\overline{SS}$ does not disable Host mode.

Value	Description
0	Enable the Client Select line when operating as SPI host
1	Disable the Client Select line when operating as SPI host

Bits 1:0 – MODE[1:0] Mode
These bits select the Transfer mode. The four combinations of SCK phase and polarity concerning the serial data are shown below. These bits decide whether the first edge of a clock cycle (leading edge) is rising or falling and whether data setup and sample occur on the leading or trailing edge. When the leading edge is rising, the SCK signal is low when idle, and when the leading edge is falling, the SCK signal is high when idle.

Value	Name	Description
0x0	0	Leading edge: Rising, sample Trailing edge: Falling, setup
0x1	1	Leading edge: Rising, setup Trailing edge: Falling, sample
0x2	2	Leading edge: Falling, sample Trailing edge: Rising, setup
0x3	3	Leading edge: Falling, setup Trailing edge: Rising, sample

© 2021 Microchip Technology Inc.
and its subsidiaries

chanhvinh.com

26.5.3 Interrupt Control

Name: INTCTRL
Offset: 0x02
Reset: 0x00
Property: -

Bit	7	6	5	4	3	2	1	0
	RXCIE	TXCIE	DREIE	SSIE				IE
Access	R/W	R/W	R/W	R/W				R/W
Reset	0	0	0	0				0

Bit 7 – RXCIE Receive Complete Interrupt Enable
In Buffer mode, this bit enables the Receive Complete interrupt. The enabled interrupt will be triggered when the RXCIF in the SPIn.INTFLAGS register is set. In the Non-Buffer mode, this bit is '0'.

Bit 6 – TXCIE Transfer Complete Interrupt Enable
In Buffer mode, this bit enables the Transfer Complete interrupt. The enabled interrupt will be triggered when the TXCIF in the SPIn.INTFLAGS register is set. In the Non-Buffer mode, this bit is '0'.

Bit 5 – DREIE Data Register Empty Interrupt Enable
In Buffer mode, this bit enables the Data Register Empty interrupt. The enabled interrupt will be triggered when the DREIF in the SPIn.INTFLAGS register is set. In the Non-Buffer mode, this bit is '0'.

Bit 4 – SSIE Client Select Trigger Interrupt Enable
In Buffer mode, this bit enables the Client Select interrupt. The enabled interrupt will be triggered when the SSIF in the SPIn.INTFLAGS register is set. In the Non-Buffer mode, this bit is '0'.

Bit 0 – IE Interrupt Enable
This bit enables the SPI interrupt when the SPI is not in Buffer mode. The enabled interrupt will be triggered when RXCIF/IF is set in the SPIn.INTFLAGS register.

© 2021 Microchip Technology Inc.
and its subsidiaries

chanhvinh.com

26.5.4 Interrupt Flags - Normal Mode

Name: INTFLAGS
Offset: 0x03
Reset: 0x00
Property: -

Bit	7	6	5	4	3	2	1	0
	IF	WRCOL						
Access	R/W	R/W						
Reset	0	0						

Bit 7 – IF Interrupt Flag
This flag is set when a serial transfer is complete, and one byte is completely shifted in/out of the SPIn.DATA register. If $\overline{SS}$ is configured as input and is driven low when the SPI is in Host mode, this will also set this flag. The IF is cleared by hardware when executing the corresponding interrupt vector. Alternatively, the IF can be cleared by first reading the SPIn.INTFLAGS register when IF is set and then accessing the SPIn.DATA register.

Bit 6 – WRCOL Write Collision
The WRCOL flag is set if the SPIn.DATA register is written before a complete byte has been shifted out. This flag is cleared by first reading the SPIn.INTFLAGS register when WRCOL is set and then accessing the SPIn.DATA register.

chanhvinh.com

chanhvinh.com

26.5.5 Interrupt Flags - Buffer Mode

Name: INTFLAGS
Offset: 0x03
Reset: 0x00
Property: -

Bit	7	6	5	4	3	2	1	0
	RXCIF	TXCIF	DREIF	SSIF				BUFOVF
Access	R/W	R/W	R/W	R/W				R/W
Reset	0	0	0	0				0

Bit 7 – RXCIF Receive Complete Interrupt Flag
This flag is set when there are unread data in the Receive Data Buffer register and cleared when the Receive Data Buffer register is empty (that is, it does not contain any unread data).
When interrupt-driven data reception is used, the Receive Complete Interrupt routine must read the received data from the DATA register to clear RXCIF. If not, a new interrupt will occur directly after the return from the current interrupt. This flag can also be cleared by writing a '1' to its bit location.

Bit 6 – TXCIF Transfer Complete Interrupt Flag
This flag is set when all the data in the Transmit shift register has been shifted out, and there is no new data in the transmit buffer (SPIn.DATA). The flag is cleared by writing a '1' to its bit location.

Bit 5 – DREIF Data Register Empty Interrupt Flag
This flag indicates whether the Transmit Data Buffer register is ready to receive new data. The flag is '1' when the transmit buffer is empty and '0' when the transmit buffer contains data to be transmitted that has not yet been moved into the shift register. The DREIF is cleared after a Reset to indicate that the transmitter is ready.
The DREIF is cleared by writing to DATA. When interrupt-driven data transmission is used, the Data Register Empty Interrupt routine must either write new data to DATA to clear DREIF or disable the Data Register Empty interrupt. If not, a new interrupt will occur directly after the return from the current interrupt.

Bit 4 – SSIF Client Select Trigger Interrupt Flag
This flag indicates that the SPI has been in Host mode, and the $\overline{SS}$ pin has been pulled low externally, so the SPI is now working in Client mode. The flag will only be set if the Client Select Disable (SSD) bit is not '1'. The flag is cleared by writing a '1' to its bit location.

Bit 0 – BUFOVF Buffer Overflow
This flag indicates data loss due to a Receive Data Buffer full condition. This flag is set if a Buffer Overflow condition is detected. A Buffer Overflow occurs when the receive buffer is full (two bytes), and a third byte has been received in the shift register. If there is no transmit data, the Buffer Overflow will not be set before the start of a new serial transfer. This flag is cleared when the DATA register is read or by writing a '1' to its bit location.

© 2021 Microchip Technology Inc.
and its subsidiaries

chanhvinh.com

26.5.6 Data

Name: DATA
Offset: 0x04
Reset: 0x00
Property: -

Bit	7	6	5	4	3	2	1	0
	DATA[7:0]							
Access	R/W	R/W	R/W	R/W	R/W	R/W	R/W	R/W
Reset	0	0	0	0	0	0	0	0

Bits 7:0 – DATA[7:0] SPI Data
The DATA register is used for sending and receiving data. Writing to the register initiates the data transmission when in Host mode while preparing data for sending in Client mode. The byte written to the register shifts out on the SPI output line when a transaction is initiated.
The SPIn.DATA register is not a physical register. Depending on what mode is configured, it is mapped to other registers, as described below.

- Normal mode:
  - Writing the DATA register will write the shift register
  - Reading from DATA will read from the Receive Data register
- Buffer mode:
  - Writing the DATA register will write to the Transmit Data Buffer register
  - Reading from DATA will read from the Receive Data Buffer register. The contents of the Receive Data register will then be moved to the Receive Data Buffer register.

© 2021 Microchip Technology Inc. and its subsidiaries

chanhvinh.com

27. TWI - Two-Wire Interface

27.1 Features

- Two-Wire Communication Interface
- Philips I^2C Compatible
  - Standard mode
  - Fast mode
  - Fast mode Plus
- System Management Bus (SMBus) 2.0 Compatible
  - Support arbitration between Start/repeated Start and data bit
  - Client arbitration allows support for the Address Resolution Protocol (ARP) in software
  - Configurable SMBus Layer 1 time-outs in hardware
  - Independent time-outs for Dual mode
- Independent Host and Client Operation
  - Combined (same pins) or Dual mode (separate pins)
  - Single or multi-host bus operation with full arbitration support
- Hardware Support for Client Address Match
  - Operates in all sleep modes
  - 7-bit address recognition
  - General Call Address recognition
  - Support for address range masking or secondary address match
- Input Filter for Bus Noise Suppression
- Smart Mode Support

27.2 Overview

The Two-Wire Interface (TWI) is a bidirectional, two-wire communication interface (bus) with a Serial Data Line (SDA) and a Serial Clock Line (SCL).

The TWI bus connects one or several client devices to one or several host devices. Any device connected to the bus can act as a host, a client, or both. The host generates the SCL by using a Baud Rate Generator (BRG) and initiates data transactions by addressing one client and telling whether it wants to transmit or receive data. The BRG is capable of generating the Standard mode (Sm) and Fast mode (Fm, Fm+) bus frequencies from 100 kHz up to 1 MHz.

The TWI will detect Start and Stop conditions, bus collisions, and bus errors. Arbitration lost, errors, collision, and clock hold are also detected and indicated in separate status flags available in both Host and Client modes.

The TWI supports multi-host bus operation and arbitration. An arbitration scheme handles the case where more than one host tries to transmit data at the same time. The TWI also supports Smart mode, which can auto-trigger operations and thus reduce software complexity. The TWI supports Dual mode with simultaneous host and client operations, which are implemented as independent units with separate enabling and configuration. The TWI supports Quick Command mode, where the host can address a client without exchanging data.

© 2021 Microchip Technology Inc.
and its subsidiaries

chanhvinh.com

27.2.1 Block Diagram

Figure 27-1. TWI Block Diagram

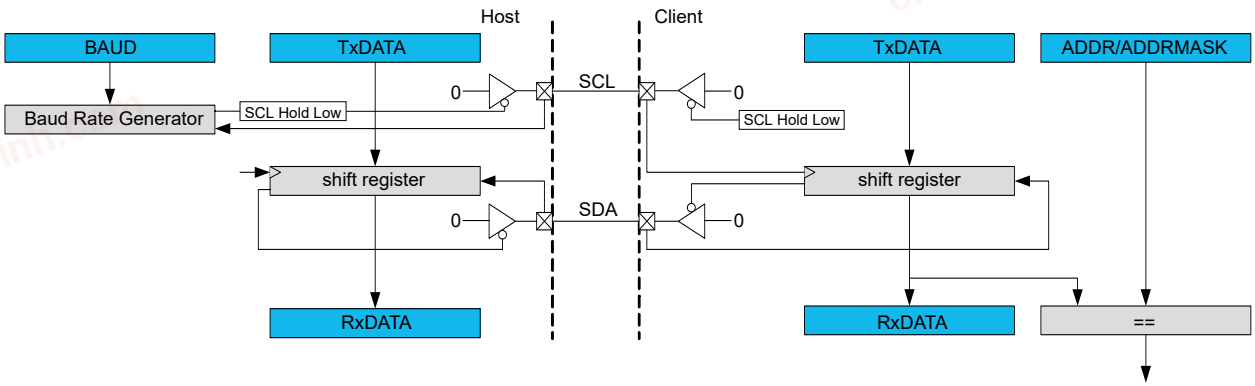

27.2.2 Signal Description

Signal	Description	Type
SCL	Serial Clock Line	Digital I/O
SDA	Serial Data Line	Digital I/O

27.3 Functional Description

27.3.1 General TWI Bus Concepts

The TWI provides a simple, bidirectional, two-wire communication bus consisting of:

- Serial Data Line (SDA) for packet transfer
- Serial Clock Line (SCL) for the bus clock

The two lines are open-collector lines (wired-AND).

The TWI bus topology is a simple and efficient method of interconnecting multiple devices on a serial bus. A device connected to the bus can be a host or a client. Only host devices can control the bus and the bus communication.

A unique address is assigned to each client device connected to the bus, and the host will use it to control the client and initiate a transaction. Several hosts can be connected to the same bus. This is called a multi-host environment. An arbitration mechanism is provided for resolving bus ownership among hosts since only one host device may own the bus at any given time.

A host indicates the start of a transaction by issuing a Start condition (S) on the bus. The host provides the clock signal for the transaction. An address packet with a 7-bit client address (ADDRESS) and a direction bit, representing whether the host wishes to read or write data (R/$\overline{W}$), are then sent.

The addressed I^2C client will then acknowledge (ACK) the address, and data packet transactions can begin. Every 9-bit data packet consists of eight data bits followed by a 1-bit reply indicating whether the data was acknowledged or not by the receiver.

After all the data packets (DATA) are transferred, the host issues a Stop condition (P) on the bus to end the transaction.

chanhvinh.com

Figure 27-2. Basic TWI Transaction Diagram Topology for a 7-Bit Address Bus

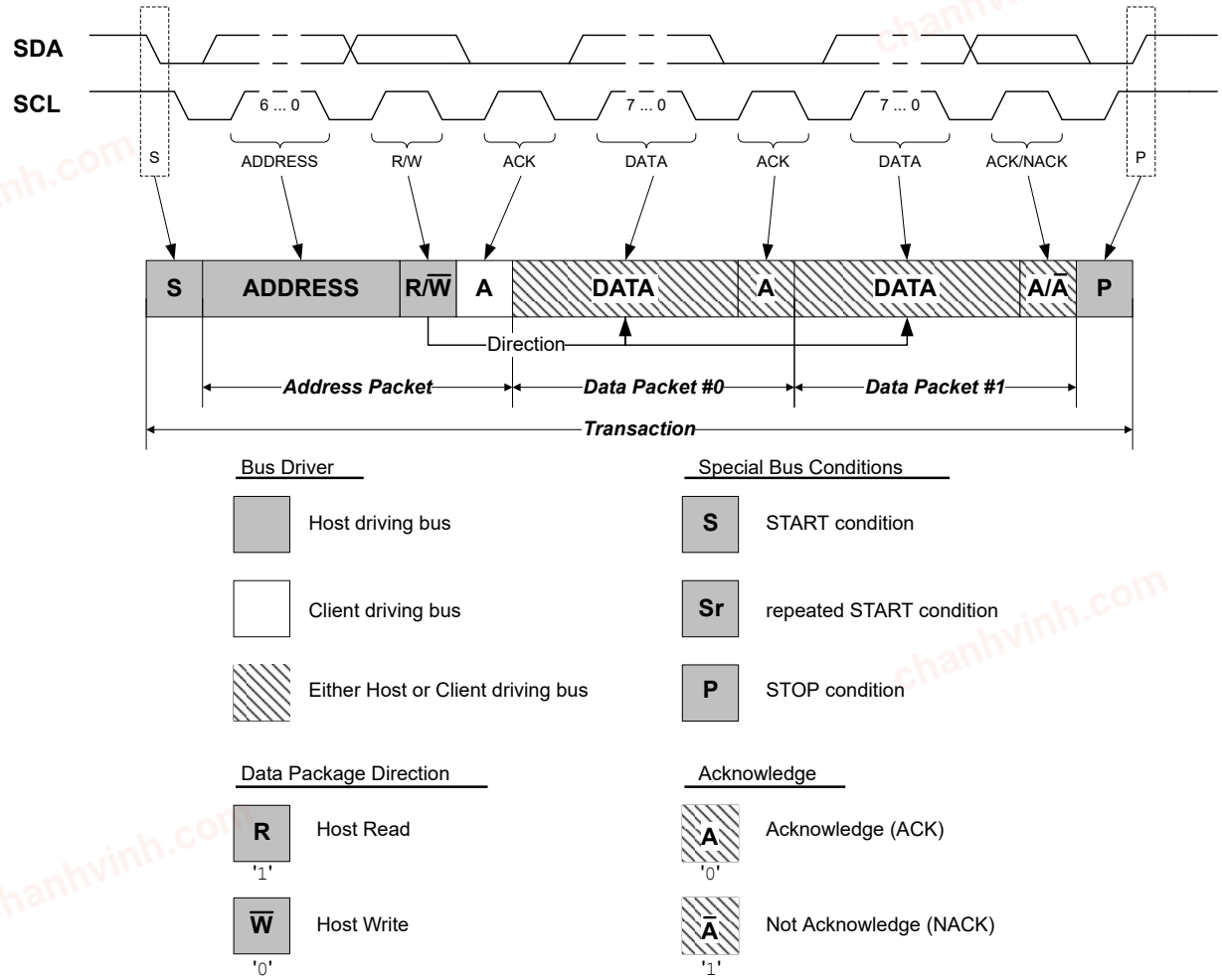

27.3.2 TWI Basic Operation

27.3.2.1 Initialization

If used, the following bits must be configured before enabling the TWI device:

- The SDA Hold Time (SDAHOLD) bit field from the Control A (TWIn.CTRLA) register
- The FM Plus Enable (FMPEN) bit from the Control A (TWIn.CTRLA) register

27.3.2.1.1 Host Initialization

Write the Host Baud Rate (TWIn.MBAUD) register to a value that will result in a valid TWI bus clock frequency. Writing a '1' to the Enable TWI Host (ENABLE) bit in the Host Control A (TWIn.MCTRLA) register will enable the TWI host. The Bus State (BUSSTATE) bit field from the Host Status (TWIn.MSTATUS) register must be set to 0x1 to force the bus state to Idle.

27.3.2.1.2 Client Initialization

Follow these steps to initialize the client:

1. Before enabling the TWI device, configure the SDA Setup Time (SDASETUP) bit from the Control A (TWIn.CTRLA) register.
2. Write the address of the client to the Client Address (TWIn.SADDR) register.
3. Write a '1' to the Enable TWI Client (ENABLE) bit in the Client Control A (TWIn.SCTRLA) register to enable the TWI client.

The client device will now wait for a host device to issue a Start condition and the matching client address.

chanhvinh.com

27.3.2.2 TWI Host Operation

The TWI host is byte-oriented, with an optional interrupt after each byte. There are separate interrupt flags for the host write and read operation. Interrupt flags can also be used for polled operation. There are dedicated status flags for indicating ACK/NACK received, bus error, arbitration lost, clock hold, and bus state.

When an interrupt flag is set to '1', the SCL is forced low. This will give the host time to respond or handle any data and will, in most cases, require software interaction. Clearing the interrupt flags releases the SCL. The number of interrupts generated is kept to a minimum by automatic handling of most conditions.

27.3.2.2.1 Clock Generation

The TWI supports several transmission modes with different frequency limitations:

- Standard mode (Sm) up to 100 kHz
- Fast mode (Fm) up to 400 kHz
- Fast mode Plus (Fm+) up to 1 MHz

Write the Host Baud Rate (TWIn.MBAUD) register to a value that will result in a TWI bus clock frequency equal to, or less than, those frequency limits, depending on the transmission mode.

The low (t_{LOW}) and high (t_{HIGH}) times are determined by the Host Baud Rate (TWIn.MBAUD) register, while the rise (t_R) and fall (t_{OF}) times are determined by the bus topology.

Figure 27-3. SCL Timing

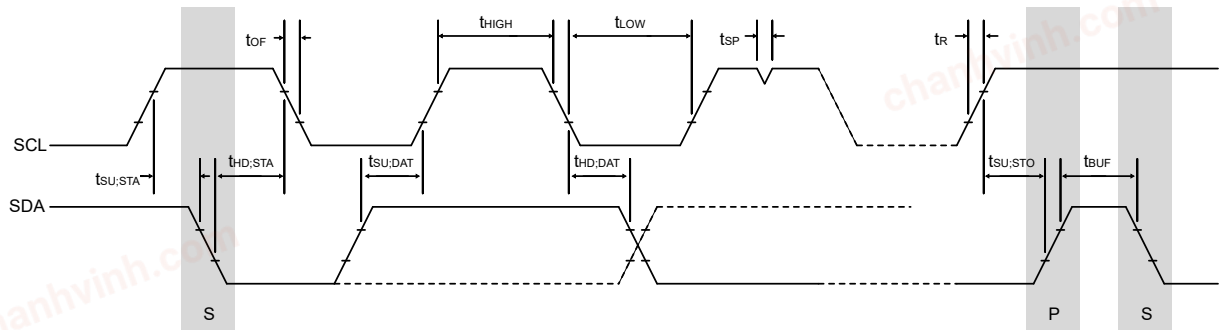

- t_{LOW} is the low period of SCL clock
- t_{HIGH} is the high period of SCL clock
- t_R is determined by the bus impedance; for internal pull-ups. Refer to the *Electrical Characteristics* section for details.
- t_{OF} is the output fall time and is determined by the open-drain current limit and bus impedance. Refer to the *Electrical Characteristics* section for details.

Properties of the SCL Clock

The SCL frequency is given by:

Equation 27-1. SCL Frequency

$$f_{SCL} = \frac{1}{t_{LOW} + t_{HIGH} + t_{OF} + t_R}[\text{Hz}]$$

The SCL clock is designed to have a 50/50 duty cycle, where the low period of the duty cycle comprises of t_{OF} and t_{LOW}. t_{HIGH} will not start until a high state of SCL has been detected. The BAUD bit field in the TWIn.MBAUD register and the SCL frequency are related by the following formula:

Equation 27-2. SCL Frequency

$$f_{SCL} = \frac{f_{CLK_PER}}{10 + 2 \times BAUD + f_{CLK_PER} \times t_R}$$

Equation 27-2 can be transformed to express BAUD:

chanhvinh.com

Equation 27-3. BAUD

$$BAUD = \frac{f_{CLK_PER}}{2 \times f_{SCL}} - \left(5 + \frac{f_{CLK_PER} \times t_R}{2}\right)$$

Calculation of the BAUD Value

To ensure operation within the specifications of the desired speed mode (Sm, Fm, Fm+), follow these steps:

1. Calculate a value for the BAUD bit field using Equation 27-3.
2. Calculate t_{LOW} using the BAUD value from step 1:

   Equation 27-4. t_{LOW}

   $$t_{LOW} = \frac{BAUD + 5}{f_{CLK_PER}} - t_{OF}$$

3. Check if t_{LOW} from Equation 27-4 is above the specified minimum of the desired mode (t_{LOW_Sm} = 4700 ns, t_{LOW_Fm} = 1300 ns, t_{LOW_Fm+} = 500 ns).
   - If the calculated t_{LOW} is above the limit, use the BAUD value from Equation 27-3
   - If the limit is not met, calculate a new BAUD value using Equation 27-5 below, where t_{LOW_mode} is either t_{LOW_Sm}, t_{LOW_Fm}, or t_{LOW_Fm+} from the mode specifications:

     Equation 27-5. BAUD

     $$BAUD = f_{CLK_PER} \times (t_{LOW_mode} + t_{OF}) - 5$$

27.3.2.2.2 TWI Bus State Logic

The bus state logic continuously monitors the activity on the TWI bus when the host is enabled. It continues to operate in all sleep modes, including Power-Down.

The bus state logic includes Start and Stop condition detectors, collision detection, inactive bus time-out detection, and a bit counter. These are used to determine the bus state. The software can get the current bus state by reading the Bus State (BUSSTATE) bit field in the Host Status (TWIn.MSTATUS) register.

The bus state can be Unknown, Idle, Busy or Owner, and it is determined according to the state diagram shown below.

Figure 27-4. Bus State Diagram

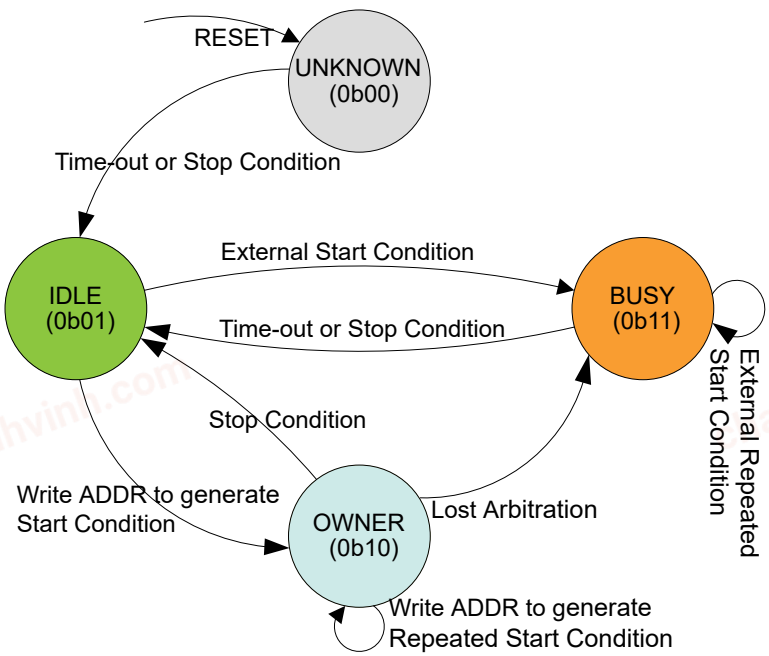

chanhvinh.com

1. **Unknown**: The bus state machine is active when the TWI host is enabled. After the TWI host has been enabled, the bus state is Unknown. The bus state will also be set to Unknown after a system Reset is performed or after the TWI host is disabled.
2. **Idle**: The bus state machine can be forced to enter the Idle state by writing `0x1` to the Bus State (BUSSTATE) bit field. The bus state logic cannot be forced into any other state. If no state is set by the application software, the bus state will become Idle when the first Stop condition is detected. If the Inactive Bus Time-Out (TIMEOUT) bit field from the Host Control A (TWIn.MCTRLA) register is configured to a nonzero value, the bus state will change to Idle on the occurrence of a time-out. When the bus is Idle, it is ready for a new transaction.
3. **Busy**: If a Start condition, generated externally, is detected when the bus is Idle, the bus state becomes Busy. The bus state changes back to Idle when a Stop condition is detected or when a time-out, if configured, is set.
4. **Owner**: If a Start condition is generated internally when the bus is Idle, the bus state becomes Owner. If the complete transaction is performed without interference, the host issues a Stop condition, and the bus state changes back to Idle. If a collision is detected, the arbitration is lost, and the bus state becomes Busy until a Stop condition is detected.

27.3.2.2.3 Transmitting Address Packets

The host starts performing a bus transaction when the Host Address (TWIn.MADDR) register is written with the client address and the R/$\overline{W}$ direction bit. The value of the MADDR register is then copied into the Host Data (TWIn.MDATA) register. If the bus state is Busy, the TWI host will wait until the bus state becomes Idle before issuing the Start condition. The TWI will issue a Start condition, and the shift register performs a byte transmit operation on the bus.

Depending on the arbitration and the R/$\overline{W}$ direction bit, one of four cases (M1 to M4) arises after the transmission of the address packet.

Figure 27-5. TWI Host Operation

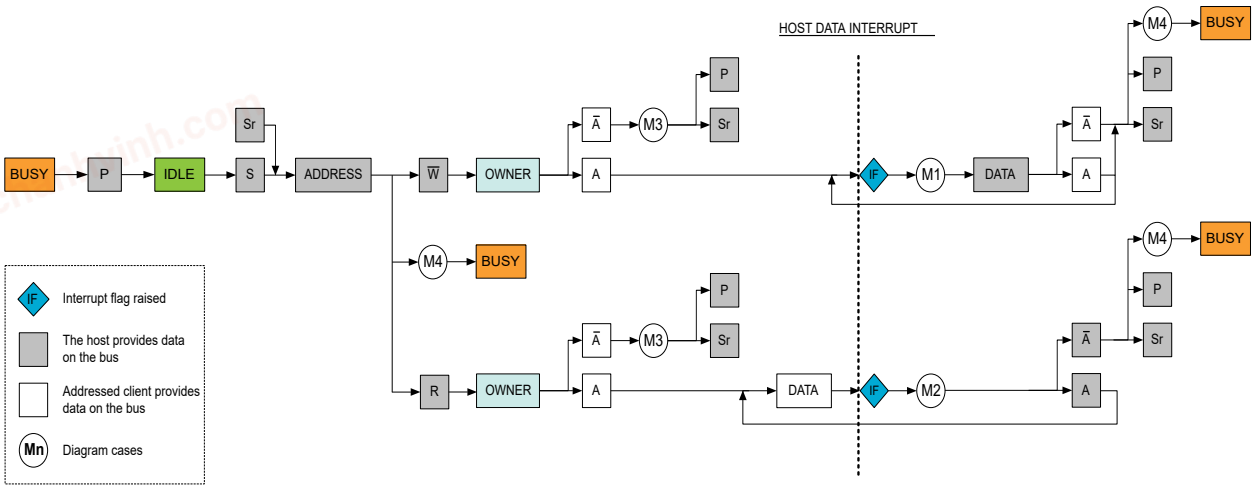

Case M1: Address Packet Transmit Complete - Direction Bit Set to '0'

If a client device responds to the address packet with an ACK, the Write Interrupt Flag (WIF) is set to '1', the Received Acknowledge (RXACK) flag is set to '0', and the Clock Hold (CLKHOLD) flag is set to '1'. The WIF, RXACK and CLKHOLD flags are located in the Host Status (TWIn.MSTATUS) register.

The clock hold is active at this point, forcing the SCL low. This will stretch the low period of the clock to slow down the overall clock frequency, forcing delays required to process the data and preventing further activity on the bus.

The software can prepare to:

- Transmit data packets to the client

Case M2: Address Packet Transmit Complete - Direction Bit Set to '1'

If a client device responds to the address packet with an ACK, the RXACK flag is set to '0', and the client can start sending data to the host without any delays because the client owns the bus at this moment. The clock hold is active at this point, forcing the SCL low.

The software can prepare to:

chanhvinh.com

- Read the received data packet from the client

Case M3: Address Packet Transmit Complete - Address not Acknowledged by Client
If no client device responds to the address packet, the WIF and the RXACK flags will be set to '1'. The clock hold is active at this point, forcing the SCL low.

The missing ACK response can indicate that the I^2C client is busy with other tasks, or it is in a sleep mode, and it is not able to respond.

The software can prepare to take one of the following actions:

- Retransmit the address packet
- Complete the transaction by issuing a Stop condition in the Command (MCMD) bit field from the Host Control B (TWIn.MCTRLB) register, which is the recommended action

Case M4: Arbitration Lost or Bus Error
If the arbitration is lost, both the WIF and the Arbitration Lost (ARBLOST) flags in the Host Status (TWIn.MSTATUS) register are set to '1'. The SDA is disabled, and the SCL is released. The bus state changes to Busy, and the host is no longer allowed to perform any operation on the bus until the bus state is changed back to Idle.

A bus error will behave similarly to the arbitration lost condition. In this case, the Bus Error (BUSERR) flag in the Host Status (TWIn.MSTATUS) register is set to '1', in addition to the WIF and ARBLOST flags.

The software can prepare to:

- Abort the operation and wait until the bus state changes to Idle by reading the Bus State (BUSSTATE) bit field in the Host Status (TWIn.MSTATUS) register

27.3.2.2.4 Transmitting Data Packets

Assuming the above M1 case, the TWI host can start transmitting data by writing to the Host Data (TWIn.MDATA) register, which will also clear the Write Interrupt Flag (WIF). During the data transfer, the host is continuously monitoring the bus for collisions and errors. The WIF flag will be set to '1' after the data packet transfer has been completed.

If the transmission is successful and the host receives an ACK bit from the client, the Received Acknowledge (RXACK) flag will be set to '0', meaning that the client is ready to receive new data packets.

The software can prepare to take one of the following actions:

- Transmit a new data packet
- Transmit a new address packet
- Complete the transaction by issuing a Stop condition in the Command (MCMD) bit field from the Host Control B (TWIn.MCTRLB) register

If the transmission is successful and the host receives a NACK bit from the client, the RXACK flag will be set to '1', meaning that the client is not able to or does not need to receive more data.

The software can prepare to take one of the following actions:

- Transmit a new address packet
- Complete the transaction by issuing a Stop condition in the Command (MCMD) bit field from the Host Control B (TWIn.MCTRLB) register

The RXACK status is valid only if the WIF flag is set to '1' and the Arbitration Lost (ARBLOST) and Bus Error (BUSERR) flags are set to '0'.

The transmission can be unsuccessful if a collision is detected. Then, the host will lose the arbitration, the Arbitration Lost (ARBLOST) flag will be set to '1', and the bus state changes to Busy. An arbitration lost during the sending of the data packet is treated the same way as the above M4 case.

The WIF, ARBLOST, BUSERR and RXACK flags are all located in the Host Status (TWIn.MSTATUS) register.

27.3.2.2.5 Receiving Data Packets

Assuming the M2 case above, the clock is released for one byte, allowing the client to put one byte of data on the bus. The host will receive one byte of data from the client, and the Read Interrupt Flag (RIF) will be set to '1' together with the Clock Hold (CLKHOLD) flag. The action selected by the Acknowledge Action (ACKACT) bit in the Host Control B (TWIn.MCTRLB) register is automatically sent on the bus when a command is written to the Command (MCMD) bit field in the TWIn.MCTRLB register.

chanhvinh.com

The software can prepare to take one of the following actions:

- Respond with an ACK by writing '0' to the ACKACT bit in the TWIn.MCTRLB register and prepare to receive a new data packet
- Respond with a NACK by writing '1' to the ACKACT bit and then transmit a new address packet
- Respond with a NACK by writing '1' to the ACKACT bit and then complete the transaction by issuing a Stop condition in the MCMD bit field from the TWIn.MCTRLB register

A NACK response might not be successfully executed, as the arbitration can be lost during the transmission. If a collision is detected, the host loses the arbitration, the Arbitration Lost (ARBLOST) flag is set to '1', and the bus state changes to Busy. The Host Write Interrupt Flag (WIF) is set if the arbitration was lost when sending a NACK or a bus error occurred during the procedure. An arbitration lost during the sending of the data packet is treated in the same way as the above M4 case.

The RIF, CLKHOLD, ARBLOST and WIF flags are all located in the Host Status (TWIn.MSTATUS) register.

Note: The RIF and WIF flags are mutually exclusive and cannot be set simultaneously.

27.3.2.3 TWI Client Operation

The TWI client is byte-oriented with optional interrupts after each byte. There are separate interrupt flags for the client data and for address/Stop recognition. Interrupt flags can also be used for polled operation. There are dedicated status flags for indicating ACK/NACK received, clock hold, collision, bus error, and R/$\overline{W}$ direction bit.

When an interrupt flag is set to '1', the SCL is forced low. This will give the client time to respond or handle any data, and will, in most cases, require software interaction. The number of interrupts generated is kept to a minimum by automatic handling of most conditions.

The Address Recognition Mode (PMEN) bit in the Client Control A (TWIn.SCTRLA) register can be configured to allow the client to respond to all received addresses.

27.3.2.3.1 Receiving Address Packets

When the TWI is configured as a client, it will wait for a Start condition to be detected. When this happens, the successive address packet will be received and checked by the address match logic. The client will ACK a correct address and store the address in the Client Data (TWIn.SDATA) register. If the received address is not a match, the client will not acknowledge or store the address, but wait for a new Start condition.

The Address or Stop Interrupt Flag (APIF) in the Client Status (TWIn.SSTATUS) register is set to '1' when a Start condition is succeeded by one of the following:

- A valid address match with the address stored in the Address (ADDR[7:1]) bit field in the Client Address (TWIn.SADDR) register
- The General Call Address (0x00), and the Address (ADDR[0]) bit in the Client Address (TWIn.SADDR) register is set to '1'
- A valid address match with the secondary address stored in the Address Mask (ADDRMASK) bit field, and the Address Mask Enable (ADDREN) bit is set to '1' in the Client Address Mask (TWIn.SADDRMASK) register
- Any address if the Address Recognition Mode (PMEN) bit in the Client Control A (TWIn.SCTRLA) register is set to '1'

A Start condition immediately followed by a Stop condition is an illegal operation, and the Bus Error (BUSERR) flag in the Client Status (TWIn.SSTATUS) register is set.

Depending on the Read/Write Direction (DIR) bit in the Client Status (TWIn.SSTATUS) register and the bus condition, one of four distinct cases (S1 to S4) arises after the reception of the address packet.

© 2021 Microchip Technology Inc.
and its subsidiaries

chanhvinh.com

Figure 27-6. TWI Client Operation

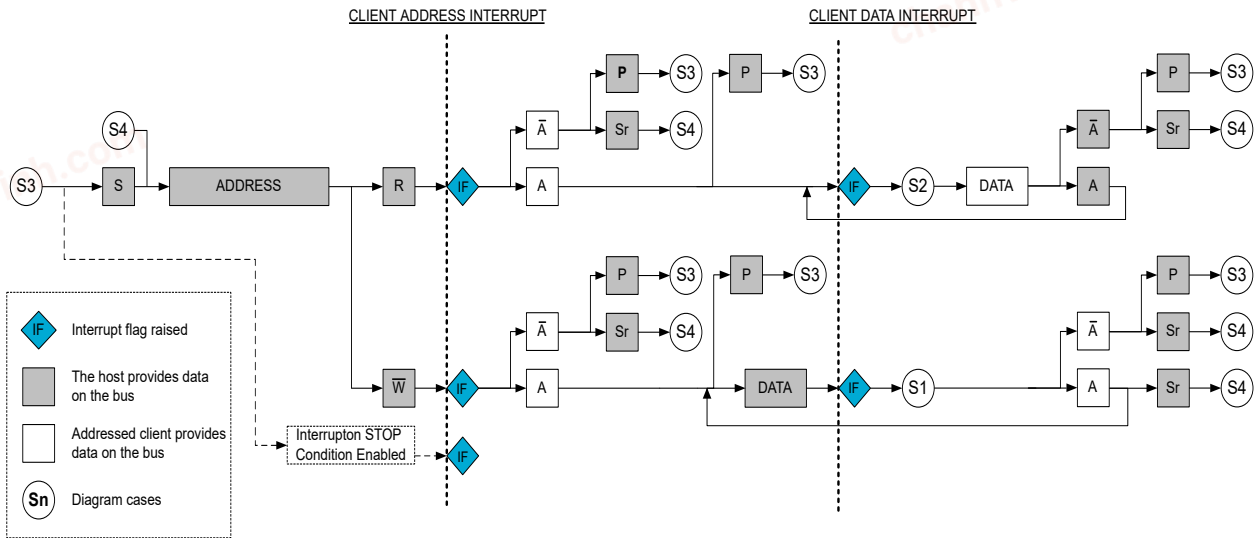

Case S1: Address Packet Accepted - Direction Bit Set to '0'

If an ACK is sent by the client after the address packet is received, and the Read/Write Direction (DIR) bit in the Client Status (TWIn.SSTATUS) register is set to '0', the host indicates a write operation.

The clock hold is active at this point, forcing the SCL low. This will stretch the low period of the clock to slow down the overall clock frequency, forcing delays required to process the data and preventing further activity on the bus.

The software can prepare to:

- Read the received data packet from the host

Case S2: Address Packet Accepted - Direction Bit Set to '1'

If an ACK is sent by the client after the address packet is received, and the DIR bit is set to '1', the host indicates a read operation, and the Data Interrupt Flag (DIF) in the Client Status (TWIn.SSTATUS) register will be set to '1'.

The clock hold is active at this point, forcing the SCL low.

The software can prepare to:

- Transmit data packets to the host

Case S3: Stop Condition Received

When the Stop condition is received, the Address or Stop (AP) flag will be set to '0', indicating that a Stop condition, and not an address match, activated the Address or Stop Interrupt Flag (APIF).

The AP and APIF flags are located in the Client Status (TWIn.SSTATUS) register.

The software can prepare to:

- Wait until a new address packet has been addressed to it

Case S4: Collision

If the client is not able to send a high-level data bit or a NACK, the Collision (COLL) bit in the Client Status (TWIn.SSTATUS) register is set to '1'. The client will commence its operation as normal, except no low values will be shifted out on the SDA. The data and acknowledge output from the client logic will be disabled. The clock hold is released. A Start or repeated Start condition will be accepted.

The COLL bit is intended for systems where the Address Resolution Protocol (ARP) is employed. A detected collision in non-ARP situations indicates that there has been a protocol violation and must be treated as a bus error.

27.3.2.3.2 Receiving Data Packets

Assuming the above S1 case, the client must be ready to receive data. When a data packet is received, the Data Interrupt Flag (DIF) in the Client Status (TWIn.SSTATUS) register is set to '1'. The action selected by the Acknowledge Action (ACKACT) bit in the Client Control B (TWIn.SCTRLB) register is automatically sent on the bus when a command is written to the Command (SCMD) bit field in the TWIn.SCTRLB register.

chanhvinh.com

The software can prepare to take one of the following actions:

- Respond with an ACK by writing '0' to the ACKACT bit in the TWIn.SCTRLB register, indicating that the client is ready to receive more data
- Respond with a NACK by writing '1' to the ACKACT bit, indicating that the client cannot receive any more data and the host must issue a Stop or repeated Start condition

27.3.2.3.3 Transmitting Data Packets

Assuming the above S2 case, the client can start transmitting data by writing to the Client Data (TWIn.SDATA) register. When a data packet transmission is completed, the Data Interrupt Flag (DIF) in the Client Status (TWIn.SSTATUS) register is set to '1'.

The software can prepare to take one of the following actions:

- Check if the host responded with an ACK by reading the Received Acknowledge (RXACK) bit from the Client Status (TWIn.SSTATUS) register, and start transmitting new data packets
- Check if the host responded with a NACK by reading the RXACK bit, and stop transmitting data packets. The host must send a Stop or repeated Start condition after the NACK.

27.3.3 Additional Features

27.3.3.1 SMBus

If the TWI is used in an SMBus environment, the Inactive Bus Time-Out (TIMEOUT) bit field from the Host Control A (TWIn.MCTRLA) register must be configured. It is recommended to write to the Host Baud Rate (TWIn.MBAUD) register before setting the time-out because it is dependent on the baud rate setting.

A frequency of 100 kHz can be used for the SMBus environment. For the Standard mode (Sm) and Fast mode (Fm), the operating frequency has slew rate limited output, while for the Fast mode Plus (Fm+), it has x10 output drive strength.

The TWI also allows for an SMBus compatible SDA hold time configured in the SDA Hold Time (SDAHOLD) bit field from the Control A (TWIn.CTRLA) register.

27.3.3.2 Multi-Host

A host can start a bus transaction only if it has detected that the bus is in the Idle state. As the TWI bus is a multi-host bus, more devices may try to initiate a transaction at the same time. This results in multiple hosts owning the bus simultaneously. The TWI solves this problem by using an arbitration scheme where the host loses control of the bus if it is not able to transmit a high-level data bit on the SDA and the Bus State (BUSSTATE) bit field from the Host Status (TWIn.MSTATUS) register will be changed to Busy. The hosts that lose the arbitration must wait until the bus becomes Idle before attempting to reacquire the bus ownership.

Both devices can issue a Start condition, but DEVICE1 loses arbitration when attempting to transmit a high-level (bit 5) while DEVICE2 is transmitting a low-level.

Figure 27-7. TWI Arbitration

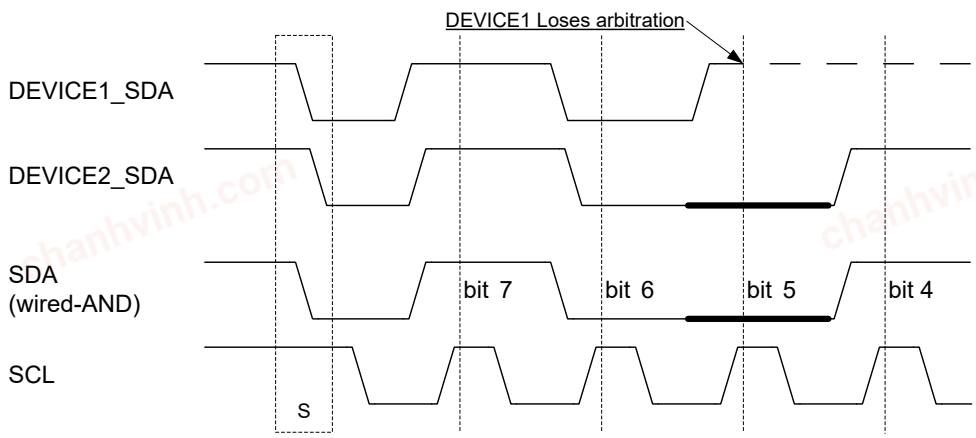

chanhvinh.com

27.3.3.3 Smart Mode

The TWI interface has a Smart mode that simplifies the application code and minimizes the user interaction needed to adhere to the I^2C protocol.

For the TWI host, the Smart mode will automatically send the ACK action as soon as the Host Data (TWIn.MDATA) register is read. This feature is only active when the Acknowledge Action (ACKACT) bit in the Host Control B (TWIn.MCTRLB) register is set to ACK. If the ACKACT bit is set to NACK, the TWI host will not generate a NACK after the MDATA register is read. This feature is enabled when the Smart Mode Enable (SMEN) bit in the Host Control A (TWIn.MCTRLA) register is set to '1'.

For the TWI client, the Smart mode will automatically send the ACK action as soon as the Client Data (TWIn.SDATA) register is read. The Smart mode will automatically set the Data Interrupt Flag (DIF) to '0' in the Client Status (TWIn.SSTATUS) register if the TWIn.SDATA register is read or written. This feature is enabled when the Smart Mode Enable (SMEN) bit in the Client Control A (TWIn.SCTRLA) register is set to '1'.

27.3.3.4 Dual Mode

The TWI supports Dual mode operation where the host and the client will operate simultaneously and independently. In this case, the Control A (TWIn.CTRLA) register will configure the host device, and the Dual Mode Control (TWIn.DUALCTRL) register will configure the client device. See the 27.3.2.1 Initialization section for more details about the host configuration.

If used, the following bits must be configured before enabling the TWI Dual mode:

- The SDA Hold Time (SDAHOLD) bit field in the DUALCTRL register
- The FM Plus Enable (FMPEN) bit from the DUALCTRL register

The Dual mode can be enabled by writing a '1' to the Dual Control Enable (ENABLE) bit in the DUALCTRL register.

27.3.3.5 Quick Command Mode

With Quick Command mode, the R/$\overline{W}$ bit from the address packet denotes the command. This mode is enabled by writing '1' to the Quick Command Enable (QCEN) bit in the Host Control A (TWIn.MCTRLA) register. There are no data sent or received.

The Quick Command mode is SMBus specific, where the R/$\overline{W}$ bit can be used to turn a device function on/off or to enable/disable a low-power Standby mode. This mode can be enabled to auto-trigger operations and reduce software complexity.

After the host receives an ACK from the client, either the Read Interrupt Flag (RIF) or Write Interrupt Flag (WIF) will be set, depending on the value of the R/$\overline{W}$ bit. When either the RIF or WIF flag is set after issuing a Quick Command, the TWI will accept a Stop command by writing the Command (MCMD) bit field in the Host Control B (TWIn.MCTRLB) register.

The RIF and WIF flags, together with the value of the last Received Acknowledge (RXACK) flag, are all located in the Host Status (TWIn.MSTATUS) register.

Figure 27-8. Quick Command Frame Format

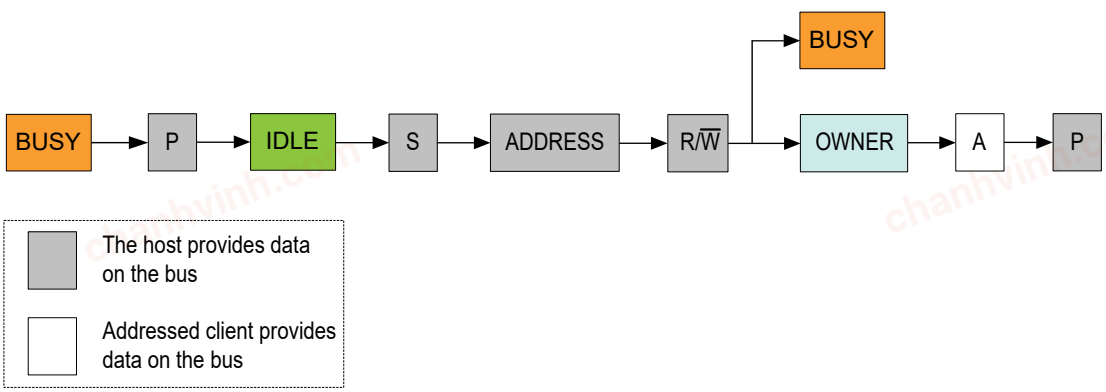

27.3.3.6 10-Bit Address

Regardless of whether the transaction is a read or write, the host must start by sending the 10-bit address with the R/$\overline{W}$ direction bit set to '0'.

chanhvinh.com

The client address match logic supports recognition of 7-bit addresses and General Call Address. The Client Address (TWIn.SADDR) register is used by the client address match logic to determine if a host device has addressed the TWI client.

The TWI client address match logic only supports recognition of the first byte of a 10-bit address, and the second byte must be handled in software. The first byte of the 10-bit address will be recognized if the upper five bits of the Client Address (TWIn.SADDR) register are 0b11110. Thus, the first byte will consist of five indication bits, the two Most Significant bits (MSbs) of the 10-bits address, and the R/$\overline{W}$ direction bit. The Least Significant Byte (LSB) of the address that follows from the host will come in the form of a data packet.

Figure 27-9. 10-Bit Address Transmission

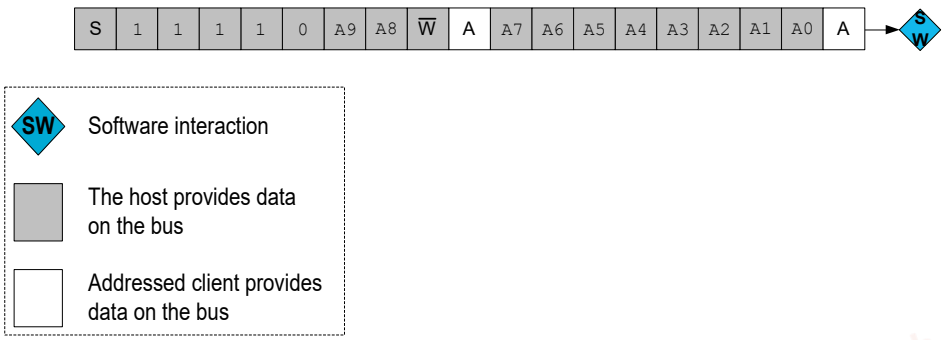

27.3.4 Interrupts

Table 27-1. Available Interrupt Vectors and Sources

Name	Vector Description	Conditions
Client	TWI Client interrupt	• DIF: Data Interrupt Flag in TWIn.SSTATUS is set to '1' • APIF: Address or Stop Interrupt Flag in TWIn.SSTATUS is set to '1'
Host	TWI Host interrupt	• RIF: Read Interrupt Flag in TWIn.MSTATUS is set to '1' • WIF: Write Interrupt Flag in TWIn.MSTATUS is set to '1'

When an interrupt condition occurs, the corresponding interrupt flag is set in the Host Status (TWIn.MSTATUS) register or the Client Status (TWIn.SSTATUS) register.

When several interrupt request conditions are supported by an interrupt vector, the interrupt requests are ORed together into one combined interrupt request to the interrupt controller. The user must read the interrupt flags from the TWIn.MSTATUS register or the TWIn.SSTATUS register to determine which of the interrupt conditions are present.

27.3.5 Sleep Mode Operation

The bus state logic and the address recognition hardware continue to operate in all sleep modes. If a client device is in a sleep mode and a Start condition followed by the address of the client is detected, clock stretching is active during the wake-up period until the main clock is available. The host will stop operation in all sleep modes. When the Dual mode is active, the device will wake up only when the Start condition is sent on the client bus.

27.3.6 Debug Operation

During run-time debugging, the TWI will continue normal operation. Halting the CPU in Debugging mode will halt the normal operation of the TWI. The TWI can be forced to operate with a halted CPU by writing a '1' to the Debug Run (DBGRUN) bit in the Debug Control (TWIn.DBGCTRL) register. When the CPU is halted in Debug mode, and the DBGRUN bit is '1', reading or writing the Host Data (TWIn.MDATA) register or the Client Data (TWIn.SDATA) register will neither trigger a bus operation nor cause transmit and clear flags. If the TWI is configured to require periodical service by the CPU through interrupts or similar, improper operation or data loss may result during halted debugging.

© 2021 Microchip Technology Inc. and its subsidiaries

chanhvinh.com

27.4 Register Summary

Offset	Name	Bit Pos.	7	6	5	4	3	2	1	0
0x00	CTRLA	7:0		INPUTLVL		SDASETUP	SDAHOLD[1:0]		FMPEN	
0x01	DUALCTRL	7:0		INPUTLVL			SDAHOLD[1:0]		FMPEN	ENABLE
0x02	DBGCTRL	7:0								DBGRUN
0x03	MCTRLA	7:0	RIEN	WIEN		QCEN	TIMEOUT[1:0]		SMEN	ENABLE
0x04	MCTRLB	7:0					FLUSH	ACKACT	MCMD[1:0]	
0x05	MSTATUS	7:0	RIF	WIF	CLKHOLD	RXACK	ARBLOST	BUSERR	BUSSTATE[1:0]	
0x06	MBAUD	7:0	BAUD[7:0]							
0x07	MADDR	7:0	ADDR[7:0]							
0x08	MDATA	7:0	DATA[7:0]							
0x09	SCTRLA	7:0	DIEN	APIEN	PIEN			PMEN	SMEN	ENABLE
0x0A	SCTRLB	7:0						ACKACT	SCMD[1:0]	
0x0B	SSTATUS	7:0	DIF	APIF	CLKHOLD	RXACK	COLL	BUSERR	DIR	AP
0x0C	SADDR	7:0	ADDR[7:0]							
0x0D	SDATA	7:0	DATA[7:0]							
0x0E	SADDRMASK	7:0	ADDRMASK[6:0]							ADDREN

27.5 Register Description

chanhvinh.com

chanhvinh.com

27.5.1 Control A

Name: CTRLA
Offset: 0x00
Reset: 0x00
Property: -

Bit	7	6	5	4	3	2	1	0
		INPUTLVL		SDASETUP	SDAHOLD[1:0]		FMPEN	
Access		R/W		R/W	R/W	R/W	R/W	
Reset		0		0	0	0	0	

Bit 6 – INPUTLVL Input Voltage Transition Level
This bit selects between I^2C and SMBUS.

Value	Name	Description
0	I2C	I^2C input voltage transition level
1	SMBUS	SMBus 3.0 input voltage transition level

Bit 4 – SDASETUP SDA Setup Time
This bit is used in TWI Client mode to select the clock hold time and to ensure the minimum setup time on the SDA out signal.

Value	Name	Description
0	4CYC	SDA setup time is four clock cycles
1	8CYC	SDA setup time is eight clock cycles

Bits 3:2 – SDAHOLD[1:0] SDA Hold Time
This bit field selects the SDA hold time for the TWI. See the *Electrical Characteristics* section for details.

Value	Name	Description
0x0	OFF	Hold time OFF
0x1	50NS	Short hold time
0x2	300NS	Meets the SMBus 2.0 specifications under typical conditions
0x3	500NS	Meets the SMBus 2.0 across all corners

Bit 1 – FMPEN FM Plus Enable
Writing a '1' to this bit selects the 1 MHz bus speed for the TWI in default configuration or the TWI host in Dual mode configuration.

Value	Name	Description
0	OFF	Operating in Standard mode or Fast mode
1	ON	Operating in Fast mode Plus

© 2021 Microchip Technology Inc. and its subsidiaries

chanhvinh.com

27.5.2 Dual Mode Control Configuration

Name: DUALCTRL
Offset: 0x01
Reset: 0x00
Property: -

Bit	7	6	5	4	3	2	1	0
		INPUTLVL			SDAHOLD[1:0]		FMPEN	ENABLE
Access		R/W			R/W	R/W	R/W	R/W
Reset		0			0	0	0	0

Bit 6 – INPUTLVL Input Voltage Transition Level
This bit selects between I^2C and SMBUS. This bit is ignored if the Dual mode is not enabled.

Value	Name	Description
0	I2C	I^2C input voltage transition level
1	SMBUS	SMBus 3.0 input voltage transition level

Bits 3:2 – SDAHOLD[1:0] SDA Hold Time
This bit field selects the SDA hold time for the TWI client. See also the *Electrical Characteristics* section. This bit field is ignored if the Dual mode is not enabled.

Value	Name	Description
0x0	OFF	Hold time OFF
0x1	50NS	Short hold time
0x2	300NS	Meets the SMBus 2.0 specifications under typical conditions
0x3	500NS	Meets the SMBus 2.0 across all corners

Bit 1 – FMPEN FM Plus Enable
Writing a '1' to this bit selects the 1 MHz bus speed for the TWI client. This bit is ignored if the Dual mode is not enabled.

Value	Name	Description
0	OFF	Operating in Standard mode or Fast mode
1	ON	Operating in Fast mode Plus

Bit 0 – ENABLE Dual Control Enable
Writing a '1' to this bit will enable the Dual mode configuration.

© 2021 Microchip Technology Inc.
and its subsidiaries

chanhvinh.com

27.5.3 Debug Control

Name: DBGCTRL
Offset: 0x02
Reset: 0x00
Property: -

Bit	7	6	5	4	3	2	1	0
								DBGRUN
Access								R/W
Reset								0

Bit 0 – DBGRUN Debug Run
Refer to the *Debug Operation* section for details.

Value	Description
0	The TWI is halted in Break Debug mode and ignores events
1	The TWI will continue to run in Break Debug mode when the CPU is halted

chanhvinh.com

27.5.4 Host Control A

Name: MCTRLA
Offset: 0x03
Reset: 0x00
Property: -

Bit	7	6	5	4	3	2	1	0
	RIEN	WIEN		QCEN	TIMEOUT[1:0]		SMEN	ENABLE
Access	R/W	R/W		R/W	R/W	R/W	R/W	R/W
Reset	0	0		0	0	0	0	0

Bit 7 – RIEN Read Interrupt Enable
A TWI host read interrupt will be generated only if this bit and the Global Interrupt Enable (I) bit in the Status (CPU.SREG) register are set to '1'.
Writing a '1' to this bit enables the interrupt on the Read Interrupt Flag (RIF) in the Host Status (TWIn.MSTATUS) register. When the host read interrupt occurs, the RIF flag is set to '1'.

Bit 6 – WIEN Write Interrupt Enable
A TWI host write interrupt will be generated only if this bit and the Global Interrupt Enable (I) bit in the Status (CPU.SREG) register are set to '1'.
Writing a '1' to this bit enables the interrupt on the Write Interrupt Flag (WIF) in the Host Status (TWIn.MSTATUS) register. When the host write interrupt occurs, the WIF flag is set to '1'.

Bit 4 – QCEN Quick Command Enable
Writing a '1' to this bit enables the Quick Command mode. If the Quick Command mode is enabled and a client acknowledges the address, the corresponding Read Interrupt Flag (RIF) or Write Interrupt Flag (WIF) will be set depending on the value of the R/$\overline{W}$ bit.
The software must issue a Stop command by writing to the Command (MCMD) bit field in the Host Control B (TWIn.MCTRLB) register.

Bits 3:2 – TIMEOUT[1:0] Inactive Bus Time-Out
Setting this bit field to a nonzero value will enable the inactive bus time-out supervisor. If the bus is inactive for longer than the TIMEOUT setting, the bus state logic will enter the Idle state.

Value	Name	Description
0x0	DISABLED	Bus time-out disabled - I^2C
0x1	50US	50 µs - SMBus (assume the baud rate is set to 100 kHz)
0x2	100US	100 µs (assume the baud rate is set to 100 kHz)
0x3	200US	200 µs (assume the baud rate is set to 100 kHz)

Bit 1 – SMEN Smart Mode Enable
Writing a '1' to this bit enables the Host Smart mode. When the Smart mode is enabled, the existing value in the Acknowledge Action (ACKACT) bit from the Host Control B (TWIn.MCTRLB) register is sent immediately after reading the Host Data (TWIn.MDATA) register.

Bit 0 – ENABLE Enable TWI Host
Writing a '1' to this bit enables the TWI as host.

© 2021 Microchip Technology Inc. and its subsidiaries

chanhvinh.com

27.5.5 Host Control B

Name: MCTRLB
Offset: 0x04
Reset: 0x00
Property: -

Bit	7	6	5	4	3	2	1	0
					FLUSH	ACKACT	MCMD[1:0]	
Access					R/W	R/W	R/W	R/W
Reset					0	0	0	0

Bit 3 – FLUSH Flush
This bit clears the internal state of the host and the bus states changes to Idle. The TWI will transmit invalid data if the Host Data (TWIn.MDATA) register is written before the Host Address (TWIn.MADDR) register. Writing to Host Address (TWIn.MADDR) and Host Data (TWIn.MDATA) after a Flush will cause a transaction to start as soon as hardware detects SCL bus free.
Writing a '1' to this bit generates a strobe for one clock cycle, disabling the host and then re-enabling the host. Writing a '0' to this bit has no effect.

Bit 2 – ACKACT Acknowledge Action
The ACKACT[1] bit represents the behavior in the Host mode under certain conditions defined by the bus state and the software interaction. If the Smart Mode Enable (SMEN) bit in the Host Control A (TWIn.MCTRLA) register is set to '1', the acknowledge action is performed when the Host Data (TWIn.MDATA) register is read, else a command must be written to the Command (MCDM) bit field in the Host Control B (TWIn.MCTRLB) register.
The acknowledge action is not performed when the Host Data (TWIn.MDATA) register is written since the host is sending data.

Value	Name	Description
0	ACK	Send ACK
1	NACK	Send NACK

Bits 1:0 – MCMD[1:0] Command
The MCMD[1] bit field is a strobe. This bit field is always read as '0'.
Writing to this bit field triggers a host operation, as defined by the table below.

Table 27-2. Command Settings

MCMD[1:0]	Group Configuration	DIR	Description
0x0	NOACT	X	Reserved
0x1	REPSTART	X	Execute Acknowledge Action followed by repeated Start condition
0x2	RECVTRANS	$\overline{W}$	Execute Acknowledge Action (no action) followed by a byte write operation[2]
		R	Execute Acknowledge Action followed by a byte read operation
0x3	STOP	X	Execute Acknowledge Action followed by issuing a Stop condition

Notes:
1. The ACKACT bit and the MCMD bit field can be written at the same time.
2. For a host write operation, the TWI will wait for new data to be written to the Host Data (TWIn.MDATA) register.

chanhvinh.com

27.5.6 Host Status

Name: MSTATUS
Offset: 0x05
Reset: 0x00
Property: -

Bit	7	6	5	4	3	2	1	0
	RIF	WIF	CLKHOLD	RXACK	ARBLOST	BUSERR	BUSSTATE[1:0]	
Access	R/W	R/W	R/W	R	R/W	R/W	R/W	R/W
Reset	0	0	0	0	0	0	0	0

Bit 7 – RIF Read Interrupt Flag
This flag is set to '1' when the host byte read operation is completed.
The RIF flag can be used for a host read interrupt. More information can be found in the Read Interrupt Enable (RIEN) bit from the Host Control A (TWIn.MCTRLA) register.
This flag is automatically cleared when accessing several other TWI registers. The RIF flag can be cleared by choosing one of the following methods:

1. Writing a '1' to it.
2. Writing to the Host Address (TWIn.MADDR) register.
3. Writing/Reading the Host Data (TWIn.MDATA) register.
4. Writing to the Command (MCMD) bit field from the Host Control B (TWIn.MCTRLB) register.

Bit 6 – WIF Write Interrupt Flag
This flag is set to '1' when a host transmit address or byte write operation is completed, regardless of the occurrence of a bus error or arbitration lost condition.
The WIF flag can be used for a host write interrupt. More information can be found from the Write Interrupt Enable (WIEN) bit in the Host Control A (TWIn.MCTRLA) register.
This flag can be cleared by choosing one of the methods described for the RIF flag.

Bit 5 – CLKHOLD Clock Hold
When this bit is read as '1', it indicates that the host is currently holding the SCL low, stretching the TWI clock period.
This bit can be cleared by choosing one of the methods described for the RIF flag.

Bit 4 – RXACK Received Acknowledge
When this flag is read as '0', it indicates that the most recent Acknowledge bit from the client was ACK, and the client is ready for more data.
When this flag is read as '1', it indicates that the most recent Acknowledge bit from the client was NACK, and the client is not able to or does not need to receive more data.

Bit 3 – ARBLOST Arbitration Lost
When this bit is read as '1', it indicates that the host has lost arbitration. This can happen in one of the following cases:

1. While transmitting a high data bit.
2. While transmitting a NACK bit.
3. While issuing a Start condition (S).
4. While issuing a repeated Start (Sr).

This flag can be cleared by choosing one of the methods described for the RIF flag.

Bit 2 – BUSERR Bus Error
The BUSERR flag indicates that an illegal bus operation has occurred. An illegal bus operation is detected if a protocol violating the Start (S), repeated Start (Sr), or Stop (P) conditions is detected on the TWI bus lines. A Start condition directly followed by a Stop condition is one example of a protocol violation.
The BUSERR flag can be cleared by choosing one of the following methods:

© 2021 Microchip Technology Inc. and its subsidiaries

chanhvinh.com

1. Writing a '1' to it.
2. Writing to the Host Address (TWIn.MADDR) register.

The TWI bus error detector is part of the TWI host circuitry. For the bus errors to be detected, the TWI host must be enabled (ENABLE bit in TWIn.MCTRLA is '1'), and the main clock frequency must be at least four times the SCL frequency.

Bits 1:0 – BUSSTATE[1:0] Bus State
This bit field indicates the current TWI bus state. Writing 0x1 to this bit field will force the bus state to IDLE. All other values will be ignored.

Value	Name	Description
0x0	UNKNOWN	Unknown bus state
0x1	IDLE	Idle bus state
0x2	OWNER	This TWI controls the bus
0x3	BUSY	Busy bus state

chanhvinh.com

chanhvinh.com

27.5.7 Host Baud Rate

Name: MBAUD
Offset: 0x06
Reset: 0x00
Property: -

Bit	7	6	5	4	3	2	1	0
	BAUD[7:0]							
Access	R/W	R/W	R/W	R/W	R/W	R/W	R/W	R/W
Reset	0	0	0	0	0	0	0	0

Bits 7:0 – BAUD[7:0] Baud Rate
This bit field is used to derive the SCL high and low time. It must be written while the host is disabled. The host can be disabled by writing '0' to the Enable TWI Host (ENABLE) bit from the Host Control A (TWIn.MCTRLA) register. Refer to the *Clock Generation* section for more information on how to calculate the frequency of the SCL.

© 2021 Microchip Technology Inc.
and its subsidiaries

chanhvinh.com

27.5.8 Host Address

Name: MADDR
Offset: 0x07
Reset: 0x00
Property: -

Bit	7	6	5	4	3	2	1	0
	ADDR[7:0]							
Access	R/W	R/W	R/W	R/W	R/W	R/W	R/W	R/W
Reset	0	0	0	0	0	0	0	0

Bits 7:0 – ADDR[7:0] Address
This register contains the address of the external client device. When this bit field is written, the TWI will issue a Start condition, and the shift register performs a byte transmit operation on the bus depending on the bus state.
This register can be read at any time without interfering with the ongoing bus activity since a read access does not trigger the host logic to perform any bus protocol related operations.
The host control logic uses the bit 0 of this register as the R/$\overline{W}$ direction bit.

chanhvinh.com

chanhvinh.com

27.5.9 Host Data

Name: MDATA
Offset: 0x08
Reset: 0x00
Property: -

Bit	7	6	5	4	3	2	1	0
	DATA[7:0]							
Access	R/W	R/W	R/W	R/W	R/W	R/W	R/W	R/W
Reset	0	0	0	0	0	0	0	0

Bits 7:0 – DATA[7:0] Data
This bit field provides direct access to the host's physical shift register, which is used to shift out data on the bus (transmit) and to shift in data received from the bus (receive). The direct access implies that the MDATA register cannot be accessed during byte transmissions.
Reading valid data or writing data to be transmitted can only be successful when the CLKHOLD bit is read as '1' or when an interrupt occurs.
A write access to the MDATA register will command the host to perform a byte transmit operation on the bus, directly followed by receiving the Acknowledge bit from the client. This is independent of the Acknowledge Action (ACKACT) bit from the Host Control B (TWIn.MCTRLB) register. The write operation is performed regardless of winning or losing arbitration before the Write Interrupt Flag (WIF) is set to '1'.
If the Smart Mode Enable (SMEN) bit in the Host Control A (TWIn.MCTRLA) register is set to '1', a read access to the MDATA register will command the host to perform an acknowledge action. This is dependent on the setting of the Acknowledge Action (ACKACT) bit from the Host Control B (TWIn.MCTRLB) register.
Notes:

1. The WIF and RIF flags are cleared automatically if the MDATA register is read while ACKACT is set to '1'.
2. The ARBLOST and BUSEER flags are left unchanged.
3. The WIF, RIF, ARBLOST, and BUSERR flags together with the Clock Hold (CLKHOLD) bit are all located in the Host Status (TWIn.MSTATUS) register.

chanhvinh.com

27.5.10 Client Control A

Name: SCTRLA
Offset: 0x09
Reset: 0x00
Property: -

Bit	7	6	5	4	3	2	1	0
	DIEN	APIEN	PIEN			PMEN	SMEN	ENABLE
Access	R/W	R/W	R/W			R/W	R/W	R/W
Reset	0	0	0			0	0	0

Bit 7 – DIEN Data Interrupt Enable
Writing this bit to '1' enables an interrupt on the Data Interrupt Flag (DIF) from the Client Status (TWIn.SSTATUS) register.
A TWI client data interrupt will be generated only if this bit, the DIF flag, and the Global Interrupt Enable (I) bit in Status (CPU.SREG) register are all '1'.

Bit 6 – APIEN Address or Stop Interrupt Enable
Writing this bit to '1' enables an interrupt on the Address or Stop Interrupt Flag (APIF) from the Client Status (TWIn.SSTATUS) register.
A TWI client address or stop interrupt will be generated only if this bit, the APIF flag, and the Global Interrupt Enable (I) bit in the Status (CPU.SREG) register are all '1'.
Notes:

1. The client stop interrupt shares the interrupt flag and vector with the client address interrupt.
2. The Stop Interrupt Enable (PIEN) bit in the Client Control A (TWIn.SCTRLA) register must be written to '1' for the APIF to be set on a Stop condition.
3. When the interrupt occurs, the Address or Stop (AP) bit in the Client Status (TWIn.SSTATUS) register will determine whether an address match or a Stop condition caused the interrupt.

Bit 5 – PIEN Stop Interrupt Enable
Writing this bit to '1' allows the Address or Stop Interrupt Flag (APIF) in the Client Status (TWIn.SSTATUS) register to be set when a Stop condition occurs. To use this feature, the main clock frequency must be at least four times the SCL frequency.

Bit 2 – PMEN Address Recognition Mode
If this bit is written to '1', the client address match logic responds to all received addresses.
If this bit is written to '0', the address match logic uses the Client Address (TWIn.SADDR) register to determine which address to recognize as the client's address.

Bit 1 – SMEN Smart Mode Enable
Writing this bit to '1' enables the client Smart mode. When the Smart mode is enabled, issuing a command by writing to the Command (SCMD) bit field in the Client Control B (TWIn.SCTRLB) register or accessing the Client Data (TWIn.SDATA) register resets the interrupt, and the operation continues. If the Smart mode is disabled, the client always waits for a new client command before continuing.

Bit 0 – ENABLE Enable TWI Client
Writing this bit to '1' enables the TWI client.

© 2021 Microchip Technology Inc.
and its subsidiaries

chanhvinh.com

27.5.11 Client Control B

Name: SCTRLB
Offset: 0x0A
Reset: 0x00
Property: -

Bit	7	6	5	4	3	2	1	0
						ACKACT	SCMD[1:0]	
Access						R/W	R/W	R/W
Reset						0	0	0

Bit 2 – ACKACT Acknowledge Action
The ACKACT[1] bit represents the behavior of the client device under certain conditions defined by the bus protocol state and the software interaction. If the Smart Mode Enable (SMEN) bit in the Client Control A (TWIn.SCTRLA) register is set to '1', the acknowledge action is performed when the Client Data (TWIn.SDATA) register is read, else a command must be written to the Command (SCMD) bit field in the Client Control B (TWIn.SCTRLB) register.
The acknowledge action is not performed when the Client Data (TWIn.SDATA) register is written since the client is sending data.

Value	Name	Description
0	ACK	Send ACK
1	NACK	Send NACK

Bits 1:0 – SCMD[1:0] Command
The SCMD[1] bit field is a strobe. This bit field is always read as '0'.
Writing to this bit field triggers a client operation as defined by the table below.

Table 27-3. Command Settings

Value	Name	DIR	Description	
0x0	NOACT	X	No action	
0x1	—	X	Reserved	
0x2	COMPTRANS	$\overline{W}$	Execute Acknowledge Action succeeded by waiting for any Start (S/Sr) condition	Used to complete a transaction
		R	Wait for any Start (S/Sr) condition	
0x3	RESPONSE	$\overline{W}$	Execute Acknowledge Action succeeded by reception of next byte	
		R	Used in response to an address interrupt (APIF): Execute Acknowledge Action succeeded by client data interrupt.	
			Used in response to a data interrupt (DIF): Execute a byte read operation followed by Acknowledge Action.	

Note: 1. The ACKACT bit and the SCMD bit field can be written at the same time. The ACKACT will be updated before the command is triggered.

© 2021 Microchip Technology Inc. and its subsidiaries

chanhvinh.com

27.5.12 Client Status

Name: SSTATUS
Offset: 0x0B
Reset: 0x00
Property: -

Bit	7	6	5	4	3	2	1	0
	DIF	APIF	CLKHOLD	RXACK	COLL	BUSERR	DIR	AP
Access	R/W	R/W	R	R	R/W	R/W	R	R
Reset	0	0	0	0	0	0	0	0

Bit 7 – DIF Data Interrupt Flag
This flag is set to '1' when the client byte transmit or receive operation is completed without any bus errors. This flag can be set to '1' with an unsuccessful transaction in case of a collision detection. More information can be found in the Collision (COLL) bit description.
The DIF flag can generate a client data interrupt. More information can be found in Data Interrupt Enable (DIEN) bit from the Client Control A (TWIn.SCTRLA) register.
This flag is automatically cleared when accessing several other TWI registers. The DIF flag can be cleared by choosing one of the following methods:

1. Writing/Reading the Client Data (TWIn.SDATA) register.
2. Writing to the Command (SCMD) bit field from the Client Control B (TWIn.SCTRLB) register.

Bit 6 – APIF Address or Stop Interrupt Flag
This flag is set to '1' when the client address has been received or by a Stop condition.
The APIF flag can generate a client address or stop interrupt. More information can be found in the Address or Stop Interrupt Enable (APIEN) bit from the Client Control A (TWIn.SCTRLA) register.
This flag can be cleared by choosing one of the methods described for the DIF flag.

Bit 5 – CLKHOLD Clock Hold
When this bit is read as '1', it indicates that the client is currently holding the SCL low, stretching the TWI clock period.
This bit is set to '1' when an address or data interrupt occurs. Resetting the corresponding interrupt will indirectly set this bit to '0'.

Bit 4 – RXACK Received Acknowledge
When this flag is read as '0', it indicates that the most recent Acknowledge bit from the host was ACK.
When this flag is read as '1', it indicates that the most recent Acknowledge bit from the host was NACK.

Bit 3 – COLL Collision
When this bit is read as '1', it indicates that the client has not been able to do one of the following:

1. Transmit high bits on the SDA. The Data Interrupt Flag (DIF) will be set to '1' at the end as a result of the internal completion of an unsuccessful transaction.
2. Transmit the NACK bit. The collision occurs because the client address match already took place, and the APIF flag is set to '1' as a result.

Writing a '1' to this bit will clear the COLL flag. The flag is automatically cleared if any Start condition (S/Sr) is detected.
Note: The APIF and DIF flags can only generate interrupts whose handlers can be used to check for the collision.

Bit 2 – BUSERR Bus Error
The BUSERR flag indicates that an illegal bus operation has occurred. Illegal bus operation is detected if a protocol violating the Start (S), repeated Start (Sr), or Stop (P) conditions is detected on the TWI bus lines. A Start condition directly followed by a Stop condition is one example of a protocol violation. Writing a '1' to this bit will clear the BUSERR flag.

chanhvinh.com

The TWI bus error detector is part of the TWI host circuitry. For the bus errors to be detected by the client, the TWI Dual mode or the TWI host must be enabled, and the main clock frequency must be at least four times the SCL frequency. The TWI Dual mode can be enabled by writing '1' to the ENABLE bit in the TWIn.DUALCTRL register. The TWI host can be enabled by writing '1' to the ENABLE bit in the TWIn.MCTRLA register.

Bit 1 – DIR Read/Write Direction
This bit indicates the current TWI bus direction. The DIR bit reflects the direction bit value from the last address packet received from a host TWI device.
When this bit is read as '1', it indicates that a host read operation is in progress.
When this bit is read as '0', it indicates that a host write operation is in progress.

Bit 0 – AP Address or Stop
When the TWI client Address or Stop Interrupt Flag (APIF) is set to '1', this bit determines whether the interrupt is due to an address detection or a Stop condition.

Value	Name	Description
0	STOP	A Stop condition generated the interrupt on the APIF flag
1	ADR	Address detection generated the interrupt on the APIF flag

chanhvinh.com

chanhvinh.com

27.5.13 Client Address

Name: SADDR
Offset: 0x0C
Reset: 0x00
Property: -

Bit	7	6	5	4	3	2	1	0
	ADDR[7:0]							
Access	R/W	R/W	R/W	R/W	R/W	R/W	R/W	R/W
Reset	0	0	0	0	0	0	0	0

Bits 7:0 – ADDR[7:0] Address
The Client Address (TWIn.SADDR) register is used by the client address match logic to determine if a host device has addressed the TWI client. The Address or Stop Interrupt Flag (APIF) and the Address or Stop (AP) bit in the Client Status (TWIn.SSTATUS) register are set to '1' if an address packet is received.
The upper seven bits (ADDR[7:1]) of the TWIn.SADDR register represent the main client address.
The Least Significant bit (ADDR[0]) of the TWIn.SADDR register is used for the recognition of the General Call Address (0x00) of the I^2C protocol. This feature is enabled when this bit is set to '1'.

chanhvinh.com

chanhvinh.com

27.5.14 Client Data

Name: SDATA
Offset: 0x0D
Reset: 0x00
Property: -

Bit	7	6	5	4	3	2	1	0
	DATA[7:0]							
Access	R/W	R/W	R/W	R/W	R/W	R/W	R/W	R/W
Reset	0	0	0	0	0	0	0	0

Bits 7:0 – DATA[7:0] Data
This bit field provides access to the client data register.
Reading valid data or writing data to be transmitted can only be achieved when the SCL is held low by the client (i.e., when the client CLKHOLD bit is set to '1'). It is not necessary to check the Clock Hold (CLKHOLD) bit from the Client Status (TWIn.SSTATUS) register in software before accessing the SDATA register if the software keeps track of the present protocol state by using interrupts or observing the interrupt flags.
If the Smart Mode Enable (SMEN) bit in the Client Control A (TWIn.SCTRLA) register is set to '1', a read access to the SDATA register, when the clock hold is active, auto-triggers bus operations and will command the client to perform an acknowledge action. This is dependent on the setting of the Acknowledge Action (ACKACT) bit from the Client Control B (TWIn.SCTRLB) register.

chanhvinh.com

27.5.15 Client Address Mask

Name: SADDRMASK
Offset: 0x0E
Reset: 0x00
Property: -

Bit	7	6	5	4	3	2	1	0
	ADDRMASK[6:0]							ADDREN
Access	R/W	R/W	R/W	R/W	R/W	R/W	R/W	R/W
Reset	0	0	0	0	0	0	0	0

Bits 7:1 – ADDRMASK[6:0] Address Mask
The ADDRMASK bit field acts as a second address match or an address mask register depending on the ADDREN bit.
If the ADDREN bit is written to '0', the ADDRMASK bit field can be loaded with a 7-bit Client Address mask. Each of the bits in the Client Address Mask (TWIn.SADDRMASK) register can mask (disable) the corresponding address bits in the TWI Client Address (TWIn.SADDR) register. When a bit from the mask is written to '1', the address match logic ignores the comparison between the incoming address bit and the corresponding bit in the Client Address (TWIn.SADDR) register. In other words, masked bits will always match, making it possible to recognize the ranges of addresses.
If the ADDREN bit is written to '1', the Client Address Mask (TWIn.SADDRMASK) register can be loaded with a second client address in addition to the Client Address (TWIn.SADDR) register. In this mode, the client will have two unique addresses, one in the Client Address (TWIn.SADDR) register and the other one in the Client Address Mask (TWIn.SADDRMASK) register.

Bit 0 – ADDREN Address Mask Enable
If this bit is written to '0', the TWIn.SADDRMASK register acts as a mask to the TWIn.SADDR register.
If this bit is written to '1', the client address match logic responds to the two unique addresses in the client TWIn.SADDR and TWIn.SADDRMASK registers.

© 2021 Microchip Technology Inc. and its subsidiaries

chanhvinh.com

28. CRCSCAN - Cyclic Redundancy Check Memory Scan

28.1 Features

- CRC-16-CCITT or CRC-32 (IEEE 802.3)
- Check of the Entire Flash Section, Application Code, and/or Boot Section
- Selectable NMI Trigger on Failure
- User-Configurable Check During Internal Reset Initialization

28.2 Overview

The Cyclic Redundancy Check (CRC) is an important safety feature. It scans the Nonvolatile Memory (NVM) making sure the code is correct.

The device will not execute code if Flash fault has occurred. By ensuring no code corruption has occurred, a potentially unintended behavior in the application that can cause a dangerous situation can be avoided. The CRC scan can be set up to scan the entire Flash, only the boot section, or both the boot and application code sections.

The CRC generates a checksum that is compared to a pre-calculated one. If the two checksums match, the Flash is OK, and the application code can start running.

The BUSY bit in the Status (CRCSCAN.STATUS) register indicates if a CRC scan is ongoing or not, while the OK bit in the Status (CRCSCAN.STATUS) register indicates if the checksum comparison matches or not.

The CRCSCAN can be set up to generate a Non-Maskable Interrupt (NMI) if the checksums do not match.

28.2.1 Block Diagram

Figure 28-1. Cyclic Redundancy Check Block Diagram

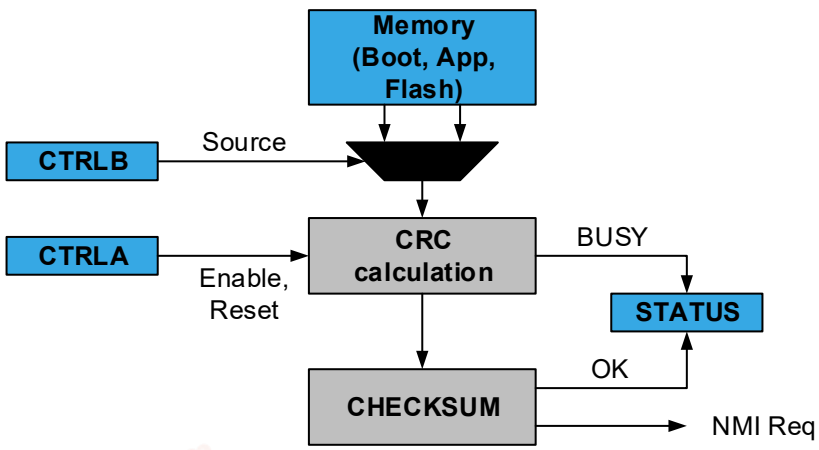

28.3 Functional Description

28.3.1 Initialization

To enable a CRC in software (or via the debugger):

1. Write the Source (SRC) bit field of the Control B (CRCSCAN.CTRLB) register to select the desired source settings.
2. Enable the CRCSCAN by writing a '1' to the ENABLE bit in the Control A (CRCSCAN.CTRLA) register.
3. The CRC will start after three cycles. The CPU will continue executing during these three cycles.

chanhvinh.com

The selection between CRC32 and CRC16 is done through fuse settings. The CRCSCAN can be configured to perform a code memory scan before the device leaves Reset. If this check fails, the CPU is not allowed to start normal code execution. This feature is enabled and controlled by the CRCSRC field in FUSE.SYSCFG0 (see the *Fuses* section for more information).

If the CRCSCAN is enabled, a successful CRC check will have the following outcome:

- Normal code execution starts
- The ENABLE bit in CRCSCAN.CTRLA will be '1'
- The SRC bit field in CRCSCAN.CTRLB will reflect the checked section(s)
- The OK flag in CRCSCAN.STATUS will be '1'

If the CRCSCAN is enabled, a non-successful CRC check will have the following outcome:

- Normal code execution does not start. The CPU will hang executing no code.
- The ENABLE bit in CRCSCAN.CTRLA will be '1'
- The SRC bit field in CRCSCAN.CTRLB will reflect the checked section(s)
- The OK flag in CRCSCAN.STATUS will be '0'
- This condition may be observed using the debug interface

28.3.2 Operation

When operating, the CRCSCAN has priority access to the Flash and will stall the CPU until completed.

The CRC will use three clock cycles for each 16-bit fetch. The CRCSCAN can be configured to do a scan from start-up.

An *n*-bit CRC applied to a data block of arbitrary length will detect any single alteration (error burst) up to *n* bits in length. For longer error bursts a fraction $1\text{-}2^{-n}$ will be detected.

The CRC generator supports CRC-16-CCITT and CRC-32 (IEEE 802.3).

The polynomial options are:

- CRC-16-CCITT: $x^{16} + x^{12} + x^5 + 1$
- CRC-32: $x^{32} + x^{26} + x^{23} + x^{22} + x^{16} + x^{12} + x^{11} + x^{10} + x^8 + x^7 + x^5 + x^4 + x^2 + x + 1$

The CRC reads byte-by-byte the content of the section(s) it is set up to check, starting with byte 0, and generates a new checksum per byte. The byte is sent through a shift register as depicted below, starting with the Most Significant bit. If the last bytes in the section contain the correct checksum, the CRC will pass. See 28.3.2.1 Checksum for how to place the checksum. The initial value of the Checksum register is 0xFFFF.

28.3.2.1 Checksum

The pre-calculated checksum must be present in the last location of the section to be checked. If the BOOT section is to be checked, the checksum must be saved in the last bytes of the BOOT section. The same is done for APPLICATION and the entire Flash. Table 28-1 shows explicitly how the checksum must be stored for the different sections. Refer to the CRCSCAN.CTRLB register description for how to configure the sections to be checked.

Table 28-1. Placement of the Pre-Calculated Checksum for CRC16 in Flash

Section to Check	CHECKSUM[15:8]	CHECKSUM[7:0]
BOOT	BOOTEND-1	BOOTEND
BOOT and APPLICATION	APPEND-1	APPEND
Full Flash	FLASHEND-1	FLASHEND

Table 28-2. Placement of the Pre-Calculated Checksum for CRC32 in Flash

Section to Check	CHECKSUM[31:24]	CHECKSUM[23:16]	CHECKSUM[15:8]	CHECKSUM[7:0]
BOOT	BOOTEND	BOOTEND-1	BOOTEND-2	BOOTEND-3
BOOT and APPLICATION	APPEND	APPEND-1	APPEND-2	APPEND-3
Full Flash	FLASHEND	FLASHEND-1	FLASHEND-2	FLASHEND-3

© 2021 Microchip Technology Inc. and its subsidiaries

chanhvinh.com

28.3.3 Interrupts

Table 28-3. Available Interrupt Vectors and Sources

Name	Vector Description	Conditions
NMI	Non-Maskable Interrupt	CRC failure

When the interrupt condition occurs the OK flag in the Status (CRCSCAN.STATUS) register is cleared to '0'.

A Non-Maskable Interrupt (NMI) is enabled by writing a '1' to the respective Enable (NMIEN) bit in the Control A (CRCSCAN.CTRLA) register, but can only be disabled with a System Reset. An NMI is generated when the OK flag in the CRCSCAN.STATUS register is cleared, and the NMIEN bit is '1'. The NMI request remains active until a System Reset and cannot be disabled.

An NMI can be triggered even if interrupts are not globally enabled.

28.3.4 Sleep Mode Operation

In all CPU sleep modes, the CRCSCAN is halted and will resume operation when the CPU wakes up.

The CRCSCAN starts operation three cycles after writing the Enable (ENABLE) bit in the Control A (CRCSCAN.CTRLA) register. During these three cycles, it is possible to enter sleep mode. In this case:

1. The CRCSCAN will not start until the CPU is woken up.
2. Any interrupt handler will execute after CRCSCAN has finished.

28.3.5 Debug Operation

Whenever the debugger reads or writes a peripheral or memory location, the CRCSCAN will be disabled.

If the CRCSCAN is busy when the debugger accesses the device, the CRCSCAN will restart the ongoing operation when the debugger accesses an internal register or when the debugger disconnects.

The BUSY bit in the Status (CRCSCAN.STATUS) register will read '1' if the CRCSCAN was busy when the debugger caused it to disable, but it will not actively check any section as long as the debugger keeps it disabled. There are synchronized CRC status bits in the debugger's internal register space, which can be read by the debugger without disabling the CRCSCAN. Reading the debugger's internal CRC status bits will make sure that the CRCSCAN is enabled.

It is possible to write the CRCSCAN.STATUS register directly from the debugger:

- BUSY bit in CRCSCAN.STATUS:
  - Writing the BUSY bit to '0' will stop the ongoing CRC operation (so that the CRCSCAN does not restart its operation when the debugger allows it).
  - Writing the BUSY bit to '1' will make the CRC start a single check with the settings in the Control B (CRCSCAN.CTRLB) register, but not until the debugger allows it.

  As long as the BUSY bit in CRCSCAN.STATUS is '1', CRCSCAN.CTRLB and the Non-Maskable Interrupt Enable (NMIEN) bit in the Control A (CRCSCAN.CTRLA) register cannot be altered.
- OK bit in CRCSCAN.STATUS:
  - Writing the OK bit to '0' can trigger a Non-Maskable Interrupt (NMI) if the NMIEN bit in CRCSCAN.CTRLA is '1'. If an NMI has been triggered, no writes to the CRCSCAN are allowed.
  - Writing the OK bit to '1' will make the OK bit read as '1' when the BUSY bit in CRCSCAN.STATUS is '0'.

Writes to CRCSCAN.CTRLA and CRCSCAN.CTRLB from the debugger are treated in the same way as writes from the CPU.

© 2021 Microchip Technology Inc.
and its subsidiaries

chanhvinh.com

28.4 Register Summary

Offset	Name	Bit Pos.	7	6	5	4	3	2	1	0
0x00	CTRLA	7:0	RESET						NMIEN	ENABLE
0x01	CTRLB	7:0							SRC[1:0]	
0x02	STATUS	7:0							OK	BUSY

28.5 Register Description

chanhvinh.com

28.5.1 Control A

Name: CTRLA
Offset: 0x00
Reset: 0x00
Property: -

If an NMI has been triggered this register is not writable.

Bit	7	6	5	4	3	2	1	0
	RESET						NMIEN	ENABLE
Access	R/W						R/W	R/W
Reset	0						0	0

Bit 7 – RESET Reset CRCSCAN
Writing this bit to '1' resets the CRCSCAN. The CRCSCAN Control and Status (CRCSCAN.CTRLA, CRCSCAN.CTRLB, CRCSCAN.STATUS) register will be cleared one clock cycle after the RESET bit is written to '1'.
If NMIEN is '0', this bit is writable both when the CRCSCAN is busy (the BUSY bit in CRCSCAN.STATUS is '1') and not busy (the BUSY bit is '0'), and will take effect immediately.
If NMIEN is '1', this bit is only writable when the CRCSCAN is not busy (the BUSY bit in CRCSCAN.STATUS is '0').
The RESET bit is a strobe bit.

Bit 1 – NMIEN Enable NMI Trigger
When this bit is written to '1', any CRC failure will trigger an NMI.
This bit can only be cleared by a System Reset. It is not cleared by a write to the RESET bit.
This bit can only be written to '1' when the CRCSCAN is not busy (the BUSY bit in CRCSCAN.STATUS is '0').

Bit 0 – ENABLE Enable CRCSCAN
Writing this bit to '1' enables the CRCSCAN with the current settings. It will stay '1' even after a CRC check has completed, but writing it to '1' again will start a new check.
Writing the bit to '0' has no effect.
The CRCSCAN can be configured to run a scan during the microcontroller (MCU) start-up sequence to verify the Flash sections before letting the CPU start normal code execution (see the 28.3.1 Initialization section). If this feature is enabled, the ENABLE bit will read as '1' when normal code execution starts.
To see whether the CRCSCAN is busy with an ongoing check, poll the BUSY bit in the Status (CRCSCAN.STATUS) register.

© 2021 Microchip Technology Inc. and its subsidiaries

chanhvinh.com

28.5.2 Control B

Name: CTRLB
Offset: 0x01
Reset: 0x00
Property: -

The Control B register contains the source settings for the CRC. It is not writable when the CRCSCAN is busy, or when an NMI has been triggered.

Bit	7	6	5	4	3	2	1	0
							SRC[1:0]	
Access							R/W	R/W
Reset							0	0

Bits 1:0 – SRC[1:0] CRC Source
The SRC bit field selects which section of the Flash will be checked by the CRCSCAN. To set up section sizes, refer to the *Fuses* section.
The CRCSCAN can be enabled during internal Reset initialization to verify Flash sections before letting the CPU start (see the *Fuses* section). If the CRCSCAN is enabled during internal Reset initialization, the SRC bit field will read out as FLASH, BOOTAPP, or BOOT when normal code execution starts (depending on the configuration).

Value	Name	Description
0x0	FLASH	The CRC is performed on the entire Flash (boot, application code, and application data sections)
0x1	BOOTAPP	The CRC is performed on the boot and application code sections of Flash
0x2	BOOT	The CRC is performed on the boot section of Flash
0x3	-	Reserved

chanhvinh.com

chanhvinh.com

28.5.3 Status

Name: STATUS
Offset: 0x02
Reset: 0x02
Property: -

Bit	7	6	5	4	3	2	1	0
							OK	BUSY
Access							R	R
Reset							1	0

Bit 1 – OK CRC OK
When this bit is read as '1', the previous CRC completed successfully. The bit is set to '1' by default before a CRC scan is run. The bit is not valid unless BUSY is '0'.

Bit 0 – BUSY CRC Busy
When this bit is read as '1', the CRCSCAN is busy. As long as the module is busy, the access to the control registers is limited.

chanhvinh.com

29. CCL - Configurable Custom Logic

29.1 Features

- Glue Logic for General Purpose PCB Design
- Six Programmable Look-Up Tables (LUTs)
- Combinatorial Logic Functions: Any Logic Expression Which Is a Function of up to Three Inputs.
- Sequencer Logic Functions:
  - Gated D flip-flop
  - JK flip-flop
  - Gated D latch
  - RS latch
- Flexible LUT Input Selection:
  - I/Os
  - Events
  - Subsequent LUT output
  - Internal peripherals such as:
    - Analog comparator
    - Timers/Counters
    - USART
    - SPI
- Clocked by a System Clock or Other Peripherals
- Output Can Be Connected to I/O Pins or an Event System
- Optional Synchronizer, Filter, or Edge Detector Available on Each LUT Output
- Optional Interrupt Generation from Each LUT Output:
  - Rising edge
  - Falling edge
  - Both edges

29.2 Overview

The Configurable Custom Logic (CCL) is a programmable logic peripheral which can be connected to the device pins, to events, or to other internal peripherals. The CCL can serve as ‘glue logic’ between the device peripherals and external devices. The CCL can eliminate the need for external logic components, and can also help the designer to overcome real-time constraints by combining Core Independent Peripherals (CIPs) to handle the most time-critical parts of the application independent of the CPU.

The CCL peripheral provides a number of Look-up Tables (LUTs). Each LUT consists of three inputs, a truth table, a synchronizer/filter, and an edge detector. Each LUT can generate an output as a user programmable logic expression with three inputs. The output is generated from the inputs using the combinatorial logic and can be filtered to remove spikes. The CCL can be configured to generate an interrupt request on changes in the LUT outputs.

Neighboring LUTs can be combined to perform specific operations. A sequencer can be used for generating complex waveforms.

© 2021 Microchip Technology Inc.
and its subsidiaries

chanhvinh.com

29.2.1 Block Diagram

Figure 29-1. CCL Block Diagram

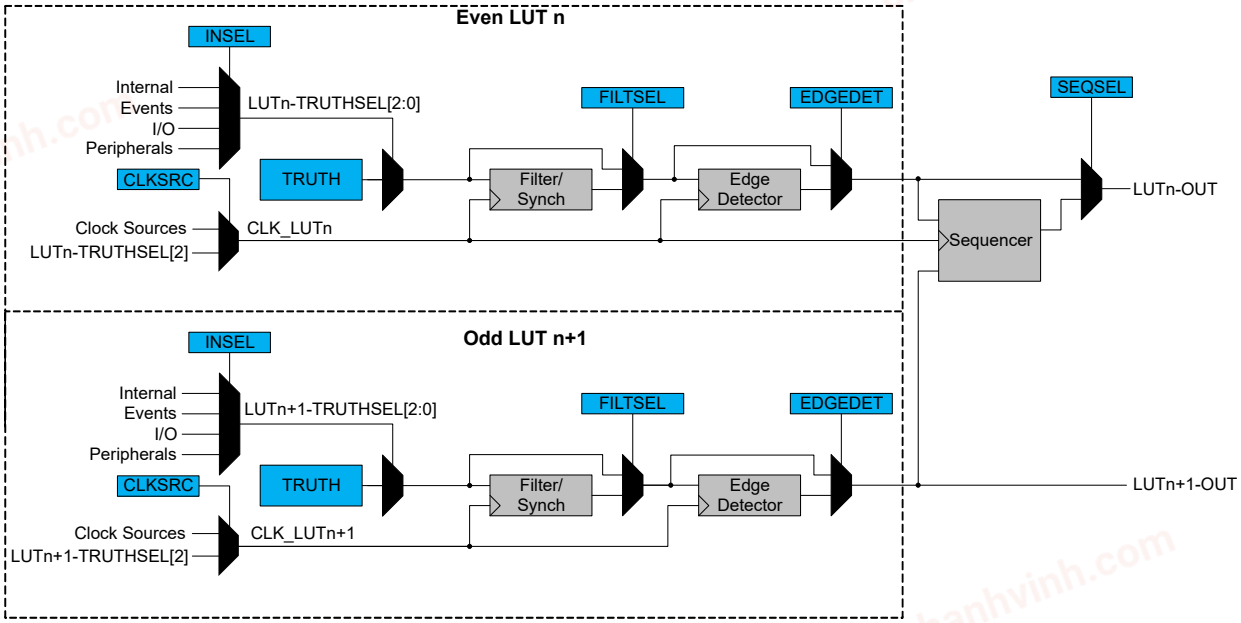

Table 29-2. Sequencer and LUT Connection

Sequencer	Even and Odd LUT
SEQ0	LUT0 and LUT1
SEQ1	LUT2 and LUT3
SEQ2	LUT4 and LUT5

29.2.2 Signal Description

Name	Type	Description
LUTn-OUT	Digital output	Output from the Look-up Table
LUTn-IN[2:0]	Digital input	Input to the Look-up Table. LUTn-IN[2] can serve as CLK_LUTn.

Refer to the *I/O Multiplexing and Considerations* section for details on the pin mapping for this peripheral. One signal can be mapped to several pins.

29.2.2.1 CCL Input Selection MUX

The following peripherals outputs are available as inputs into the CCL LUT.

Value	Input source	INSEL0[3:0]	INSEL1[3:0]	INSEL2[3:0]
0x00	MASK	None		
0x01	FEEDBACK	LUTn		
0x02	LINK	LUT[n+1]		
0x03	EVENTA	EVENTA		
0x04	EVENTB	EVENTB		
0x05	IO	IN0	IN1	IN2

chanhvinh.com

.....continued

Value	Input source	INSEL0[3:0]	INSEL1[3:0]	INSEL2[3:0]
0x06	AC	AC0 OUT	AC1 OUT	AC2 OUT
0x07	ZCD	ZCD0 OUT	ZCD1 OUT	ZCD2 OUT
0x08	USART	USART0 TXD	USART1 TXD	USART2 TXD
0x09	SPI	SPI0 MOSI	SPI0 MOSI	SPI0 SCK
0x0A	TCA0	WO0	WO1	WO2
0x0B	TCA1	WO0	WO1	WO2
0x0C	TCB	TCB0 WO	TCB1 WO	TCB2 WO
0x0D	TCD0	WOA	WOB	WOC
0x0E-0x0F	Reserved			

Notes:

- SPI connections to the CCL work only in host SPI mode
- USART connections to the CCL work only in asynchronous/synchronous USART host mode

29.3 Functional Description

29.3.1 Operation

29.3.1.1 Enable-Protected Configuration

The configuration of the LUTs and sequencers is enable-protected, meaning that they can only be configured when the corresponding even LUT is disabled (ENABLE = '0' in the LUT n Control A (CCL.LUTnCTRLA) register). This is a mechanism to suppress the undesired output from the CCL under (re-)configuration.

The following bits and registers are enable-protected:

- Sequencer Selection (SEQSEL) in the Sequencer Control n (CCL.SEQCTRLn) registers
- LUT n Control x (CCL.LUTnCTRLx) registers, except the ENABLE bit in the CCL.LUTnCTRLA register
- TRUTHn (CCL.TRUTHn) registers

The enable-protected bits in the CCL.LUTnCTRLx registers can be written at the same time as ENABLE in CCL.LUTnCTRLA is written to '1', but not at the same time as ENABLE is written to '0'.

The enable protection is denoted by the enable-protected property in the register description.

29.3.1.2 Enabling, Disabling, and Resetting

The CCL is enabled by writing a '1' to the ENABLE bit in the Control A (CCL.CTRLA) register. The CCL is disabled by writing a '0' to that ENABLE bit.

Each LUT is enabled by writing a '1' to the LUT Enable (ENABLE) bit in the CCL.LUTnCTRLA register. Each LUT is disabled by writing a '0' to the ENABLE bit in the CCL.LUTnCTRLA register.

29.3.1.3 Truth Table Logic

The truth table in each LUT unit can generate a combinational logic output as a function of up to three inputs (LUTn-TRUTHSEL[2:0]). It is possible to realize any 3-input Boolean logic function using one LUT.

© 2021 Microchip Technology Inc.
and its subsidiaries

chanhvinh.com

Figure 29-2. Truth Table Output Value Selection of an LUT

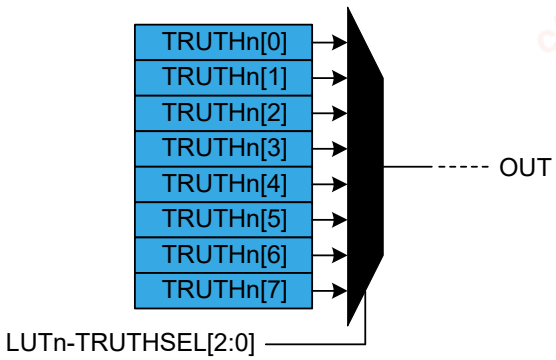

Configure the truth table inputs (LUTn-TRUTHSEL[2:0]) by writing the Input Source Selection bit fields in the LUT Control registers:

- INSEL0 in CCL.LUTnCTRLB
- INSEL1 in CCL.LUTnCTRLB
- INSEL2 in CCL.LUTnCTRLC

Each combination of the input bits (LUTn-TRUTHSEL[2:0]) corresponds to one bit in the CCL.TRUTHn register, as shown in the table below:

Table 29-3. Truth Table of an LUT

LUTn-TRUTHSEL[2]	LUTn-TRUTHSEL[1]	LUTn-TRUTHSEL[0]	OUT
0	0	0	TRUTHn[0]
0	0	1	TRUTHn[1]
0	1	0	TRUTHn[2]
0	1	1	TRUTHn[3]
1	0	0	TRUTHn[4]
1	0	1	TRUTHn[5]
1	1	0	TRUTHn[6]
1	1	1	TRUTHn[7]

Important: Consider the unused inputs turned off (tied low) when logic functions are created.

Example 29-1. LUT Output for CCL.TRUTHn = 0x42

If CCL.TRUTHn is configured to `0x42`, the LUT output will be `1` when the inputs are `'b001` or `'b110` and `0` for any other combination of inputs.

29.3.1.4 Truth Table Inputs Selection

Input Overview

The inputs can be individually:

- OFF
- Driven by peripherals
- Driven by internal events from the Event System

chanhvinh.com

- Driven by I/O pin inputs
- Driven by other LUTs

Internal Feedback Inputs (FEEDBACK)
The output from a sequencer can be used as an input source for the two LUTs it is connected to.

Figure 29-3. Feedback Input Selection

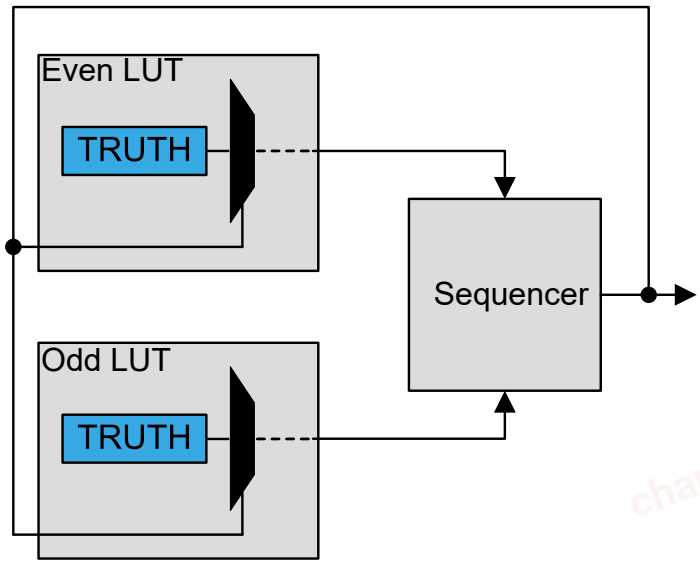

When selected (INSELy = FEEDBACK in LUTnCTRLx), the sequencer (SEQ) output is used as input for the corresponding LUTs.

Linked LUT (LINK)
When selecting the LINK input option, the next LUT's direct output is used as LUT input. In general, LUT[n+1] is linked to the input of LUT[n]. LUT0 is linked to the input of the last LUT.

Example 29-2. Linking all LUTs on a Device with Four LUTs

- LUT1 is the input for LUT0
- LUT2 is the input for LUT1
- LUT3 is the input for LUT2
- LUT0 is the input for LUT3 (wrap-around)

© 2021 Microchip Technology Inc.
and its subsidiaries

chanhvinh.com

Figure 29-4. Linked LUT Input Selection

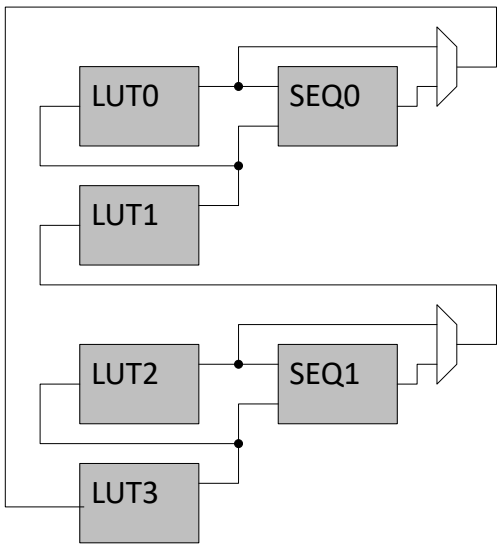

Event Input Selection (EVENTx)
Events from the Event System can be used as inputs to the LUTs by writing to the INSELn bit groups in the LUT n Control B and C registers.

I/O Pin Inputs (IO)
When selecting the IO option, the LUT input will be connected to its corresponding I/O pin. Refer to the *I/O Multiplexing and Considerations* section in the data sheet for more details about where the LUTn-INy pins are located.

Peripherals
The different peripherals on the three input lines of each LUT are selected by writing to the Input Select (INSEL) bits in the LUT Control (LUTnCTRLB and LUTnCTRLC) registers.

29.3.1.5 Filter

By default, the LUT output is a combinational function of the LUT inputs. This may cause some short glitches when the inputs change the value. These glitches can be removed by clocking through filters if demanded by application needs.

The Filter Selection (FILTSEL) bits in the LUT n Control A (CCL.LUTnCTRLA) registers define the digital filter options.

When FILTSEL = SYNCH, the output is synchronized with CLK_LUTn. The output will be delayed by two positive CLK_LUTn edges.

When FILTSEL = FILTER, only the input that is persistent for more than two positive CLK_LUTn edges will pass through the gated flip-flop to the output. The output will be delayed by four positive CLK_LUTn edges.

One clock cycle later, after the corresponding LUT is disabled, all internal filter logic is cleared.

chanhvinh.com

Figure 29-5. Filter

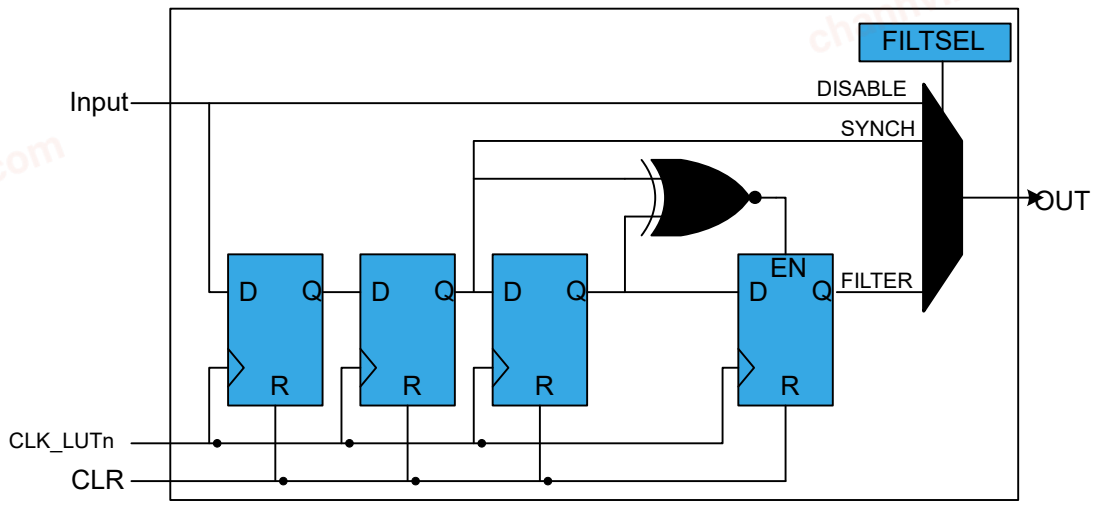

29.3.1.6 Edge Detector

The edge detector can be used to generate a pulse when detecting a rising edge on its input. To detect a falling edge, the TRUTH table can be programmed to provide an inverted output.

The edge detector is enabled by writing '1' to the Edge Detection (EDGEDET) bit in the LUTn Control A (CCL.LUTnCTRLA) register. To avoid unpredictable behavior, a valid filter option must be enabled.

The edge detection is disabled by writing a '0' to EDGEDET in CCL.LUTnCTRLA. After disabling an LUT, the corresponding internal edge detector logic is cleared one clock cycle later.

Figure 29-6. Edge Detector

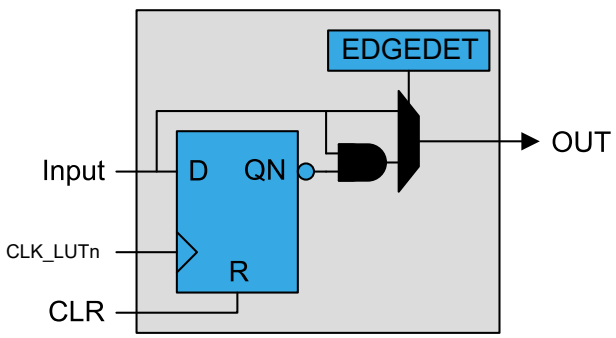

29.3.1.7 Sequencer Logic

Each LUT pair can be connected to a sequencer. The sequencer can function as either D flip-flop, JK flip-flop, gated D latch, or RS latch. The function is selected by writing the Sequencer Selection (SEQSEL) bit group in the Sequencer Control (CCL.SEQCTRLn) register.

The sequencer receives its input from either the LUT, filter or edge detector, depending on the configuration.

A sequencer is clocked by the same clock as the corresponding even LUT. The clock source is selected by the Clock Source (CLKSRC) bit group in the LUT n Control A (CCL.LUTnCTRLA) register.

The flip-flop output (OUT) is refreshed on the rising edge of the clock. When the even LUT is disabled, the latch is cleared asynchronously. The flip-flop Reset signal (R) is kept enabled for one clock cycle.

Gated D Flip-Flop (DFF)

The D input is driven by the even LUT output, and the G input is driven by the odd LUT output.

chanhvinh.com

Figure 29-7. D Flip-Flop

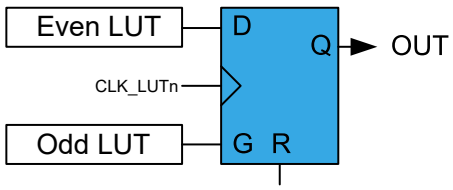

Table 29-4. DFF Characteristics

R	G	D	OUT
1	X	X	Clear
0	1	1	Set
0	1	0	Clear
0	0	X	Hold state (no change)

JK Flip-Flop (JK)

The J input is driven by the even LUT output, and the K input is driven by the odd LUT output.

Figure 29-8. JK Flip-Flop

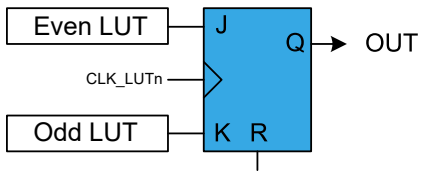

Table 29-5. JK Characteristics

R	J	K	OUT
1	X	X	Clear
0	0	0	Hold state (no change)
0	0	1	Clear
0	1	0	Set
0	1	1	Toggle

Gated D Latch (DLATCH)

The D input is driven by the even LUT output, and the G input is driven by the odd LUT output.

Figure 29-9. D Latch

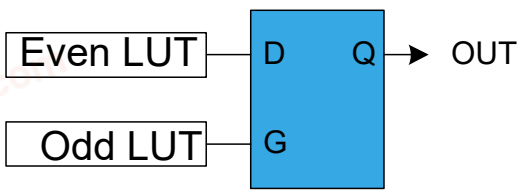

Table 29-6. D Latch Characteristics

G	D	OUT
0	X	Hold state (no change)
1	0	Clear

chanhvinh.com

.....continued		
G	**D**	**OUT**
1	1	Set

RS Latch (RS)
The S input is driven by the even LUT output, and the R input is driven by the odd LUT output.

Figure 29-10. RS Latch

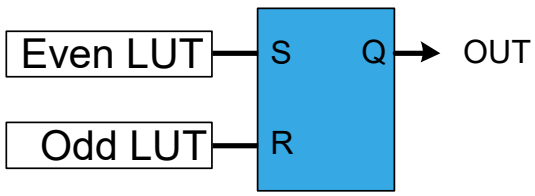

Table 29-7. RS Latch Characteristics

S	R	OUT
0	0	Hold state (no change)
0	1	Clear
1	0	Set
1	1	Forbidden state

29.3.1.8 Clock Source Settings

The filter, edge detector, and sequencer are, by default, clocked by the peripheral clock (CLK_PER). It is also possible to use other clock inputs (CLK_LUTn) to clock these blocks. This is configured by writing the Clock Source (CLKSRC) bits in the LUT Control A register.

Figure 29-11. Clock Source Settings

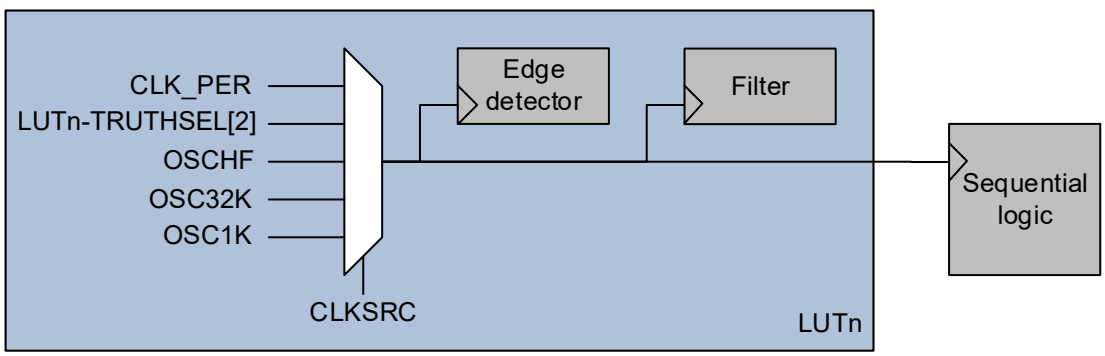

When the Clock Source (CLKSRC) bit is written to `0x1`, LUTn-TRUTHSEL[2] is used to clock the corresponding filter and edge detector (CLK_LUTn). The sequencer is clocked by the CLK_LUTn of the even LUT in the pair. When CLKSRC is written to `0x1`, LUTn-TRUTHSEL[2] is treated as OFF (low) in the TRUTH table.

The CCL peripheral must be disabled while changing the clock source to avoid undefined outputs from the peripheral.

29.3.2 Interrupts

Table 29-8. Available Interrupt Vectors and Sources

Name	Vector Description	Conditions
CCL	CCL interrupt	INTn in INTFLAG is raised as configured by the INTMODEn bits in the CCL.INTCTRLn register

chanhvinh.com

When an interrupt condition occurs, the corresponding interrupt flag is set in the peripheral's Interrupt Flags (*peripheral*.INTFLAGS) register.

An interrupt source is enabled or disabled by writing to the corresponding enable bit in the peripheral's Interrupt Control (*peripheral*.INTCTRL) register.

An interrupt request is generated when the corresponding interrupt source is enabled, and the interrupt flag is set. The interrupt request remains active until the interrupt flag is cleared. See the peripheral's INTFLAGS register for details on how to clear interrupt flags.

When several interrupt request conditions are supported by an interrupt vector, the interrupt requests are ORed together into one combined interrupt request to the interrupt controller. The user must read the peripheral's INTFLAGS register to determine which of the interrupt conditions are present.

29.3.3 Events

The CCL can generate the events shown in the table below.

Table 29-9. Event Generators in the CCL

Generator Name		Description	Event Type	Generating Clock Domain	Length of Event
Peripheral	Event				
CCL	LUTn	LUT output level	Level	Asynchronous	Depends on the CCL configuration

The CCL has the event users below for detecting and acting upon input events.

Table 29-10. Event Users in the CCL

User Name		Description	Input Detection	Async/Sync
Peripheral	Input			
CCL	LUTnx	LUTn input x or clock signal	No detection	Async

The event signals are passed directly to the LUTs without synchronization or input detection logic.

Two event users are available for each LUT. They can be selected as LUTn inputs by writing to the INSELn bit groups in the LUT n Control B and Control C (CCL.LUTnCTRLB or LUTnCTRLC) registers.

Refer to the *EVSYS - Event System* section for more details regarding the event types and the EVSYS configuration.

29.3.4 Sleep Mode Operation

Writing the Run In Standby (RUNSTDBY) bit in the Control A (CCL.CTRLA) register to '1' will allow the selected clock source to be enabled in Standby sleep mode.

If RUNSTDBY is '0', the peripheral clock will be disabled in Standby sleep mode. If the filter, edge detector, and/or sequencer are enabled, the LUT output will be forced to '0' in Standby sleep mode. In Idle sleep mode, the TRUTH table decoder will continue the operation, and the LUT output will be refreshed accordingly, regardless of the RUNSTDBY bit.

If the Clock Source (CLKSRC) bit in the LUT n Control A (CCL.LUTnCTRLA) register is written to '1', the LUTn-TRUTHSEL[2] will always clock the filter, edge detector, and sequencer. The availability of the LUTn-TRUTHSEL[2] clock in sleep modes will depend on the sleep settings of the peripheral used.

© 2021 Microchip Technology Inc.
and its subsidiaries

chanhvinh.com

29.4 Register Summary

Offset	Name	Bit Pos.	7	6	5	4	3	2	1	0
0x00	CTRLA	7:0		RUNSTDBY						ENABLE
0x01	SEQCTRL0	7:0					SEQSEL0[3:0]			
0x02	SEQCTRL1	7:0					SEQSEL1[3:0]			
0x03	SEQCTRL2	7:0					SEQSEL2[3:0]			
0x04	Reserved									
0x05	INTCTRL0	7:0	INTMODE3[1:0]		INTMODE2[1:0]		INTMODE1[1:0]		INTMODE0[1:0]	
0x06	INTCTRL1	7:0					INTMODE5[1:0]		INTMODE4[1:0]	
0x07	INTFLAGS	7:0			INT5	INT4	INT3	INT2	INT1	INT0
0x08	LUT0CTRLA	7:0	EDGEDET	OUTEN	FILTSEL[1:0]		CLKSRC[2:0]			ENABLE
0x09	LUT0CTRLB	7:0	INSEL1[3:0]				INSEL0[3:0]			
0x0A	LUT0CTRLC	7:0					INSEL2[3:0]			
0x0B	TRUTH0	7:0	TRUTH0[7:0]							
0x0C	LUT1CTRLA	7:0	EDGEDET	OUTEN	FILTSEL[1:0]		CLKSRC[2:0]			ENABLE
0x0D	LUT1CTRLB	7:0	INSEL1[3:0]				INSEL0[3:0]			
0x0E	LUT1CTRLC	7:0					INSEL2[3:0]			
0x0F	TRUTH1	7:0	TRUTH1[7:0]							
0x10	LUT2CTRLA	7:0	EDGEDET	OUTEN	FILTSEL[1:0]		CLKSRC[2:0]			ENABLE
0x11	LUT2CTRLB	7:0	INSEL1[3:0]				INSEL0[3:0]			
0x12	LUT2CTRLC	7:0					INSEL2[3:0]			
0x13	TRUTH2	7:0	TRUTH2[7:0]							
0x14	LUT3CTRLA	7:0	EDGEDET	OUTEN	FILTSEL[1:0]		CLKSRC[2:0]			ENABLE
0x15	LUT3CTRLB	7:0	INSEL1[3:0]				INSEL0[3:0]			
0x16	LUT3CTRLC	7:0					INSEL2[3:0]			
0x17	TRUTH3	7:0	TRUTH3[7:0]							
0x18	LUT4CTRLA	7:0	EDGEDET	OUTEN	FILTSEL[1:0]		CLKSRC[2:0]			ENABLE
0x19	LUT4CTRLB	7:0	INSEL1[3:0]				INSEL0[3:0]			
0x1A	LUT4CTRLC	7:0					INSEL2[3:0]			
0x1B	TRUTH4	7:0	TRUTH4[7:0]							
0x1C	LUT5CTRLA	7:0	EDGEDET	OUTEN	FILTSEL[1:0]		CLKSRC[2:0]			ENABLE
0x1D	LUT5CTRLB	7:0	INSEL1[3:0]				INSEL0[3:0]			
0x1E	LUT5CTRLC	7:0					INSEL2[3:0]			
0x1F	TRUTH5	7:0	TRUTH5[7:0]							

29.5 Register Description

chanhvinh.com

chanhvinh.com

29.5.1 Control A

Name: CTRLA
Offset: 0x00
Reset: 0x00
Property: -

Bit	7	6	5	4	3	2	1	0
		RUNSTDBY						ENABLE
Access		R/W						R/W
Reset		0						0

Bit 6 – RUNSTDBY Run in Standby
Writing this bit to '1' will enable the peripheral to run in Standby sleep mode.

Value	Description
0	The CCL will not run in Standby sleep mode
1	The CCL will run in Standby sleep mode

Bit 0 – ENABLE Enable

Value	Description
0	The peripheral is disabled
1	The peripheral is enabled

chanhvinh.com

29.5.2 Sequencer Control 0

Name: SEQCTRL0
Offset: 0x01
Reset: 0x00
Property: Enable-Protected

Bit	7	6	5	4	3	2	1	0
					SEQSEL0[3:0]			
Access					R/W	R/W	R/W	R/W
Reset					0	0	0	0

Bits 3:0 – SEQSEL0[3:0] Sequencer Selection
This bit group selects the sequencer configuration for LUT0 and LUT1.

Value	Name	Description
0x0	DISABLE	The sequencer is disabled
0x1	DFF	D flip-flop
0x2	JK	JK flip-flop
0x3	LATCH	D latch
0x4	RS	RS latch
Other	-	Reserved

chanhvinh.com

29.5.3 Sequencer Control 1

Name: SEQCTRL1
Offset: 0x02
Reset: 0x00
Property: Enable-Protected

Bit	7	6	5	4	3	2	1	0
					SEQSEL1[3:0]			
Access					R/W	R/W	R/W	R/W
Reset					0	0	0	0

Bits 3:0 – SEQSEL1[3:0] Sequencer Selection
This bit group selects the sequencer configuration for LUT2 and LUT3.

Value	Name	Description
0x0	DISABLE	The sequencer is disabled
0x1	DFF	D flip-flop
0x2	JK	JK flip-flop
0x3	LATCH	D latch
0x4	RS	RS latch
Other	-	Reserved

chanhvinh.com

29.5.4 Sequencer Control 2

Name: SEQCTRL2
Offset: 0x03
Reset: 0x00
Property: Enable-Protected

Bit	7	6	5	4	3	2	1	0
					SEQSEL2[3:0]			
Access					R/W	R/W	R/W	R/W
Reset					0	0	0	0

Bits 3:0 – SEQSEL2[3:0] Sequencer Selection
This bit group selects the sequencer configuration for LUT4 and LUT5.

Value	Name	Description
0x0	DISABLE	The sequencer is disabled
0x1	DFF	D flip-flop
0x2	JK	JK flip-flop
0x3	LATCH	D latch
0x4	RS	RS latch
Other	-	Reserved

chanhvinh.com

29.5.5 Interrupt Control 0

Name: INTCTRL0
Offset: 0x05
Reset: 0x00
Property: -

Bit	7	6	5	4	3	2	1	0
	INTMODE3[1:0]		INTMODE2[1:0]		INTMODE1[1:0]		INTMODE0[1:0]	
Access	R/W	R/W	R/W	R/W	R/W	R/W	R/W	R/W
Reset	0	0	0	0	0	0	0	0

Bits 0:1, 2:3, 4:5, 6:7 – INTMODE
The bits in INTMODEn select the interrupt sense configuration for LUTn-OUT.

Value	Name	Description
0x0	INTDISABLE	Interrupt disabled
0x1	RISING	Sense rising edge
0x2	FALLING	Sense falling edge
0x3	BOTH	Sense both edges

chanhvinh.com

chanhvinh.com

29.5.6 Interrupt Control 1

Name: INTCTRL1
Offset: 0x06
Reset: 0x00
Property: -

Bit	7	6	5	4	3	2	1	0
					INTMODE5[1:0]		INTMODE4[1:0]	
Access					R/W	R/W	R/W	R/W
Reset					0	0	0	0

Bits 0:1, 2:3 – INTMODE
The bits in INTMODEn select the interrupt sense configuration for LUTn-OUT.

Value	Name	Description
0x0	INTDISABLE	Interrupt disabled
0x1	RISING	Sense rising edge
0x2	FALLING	Sense falling edge
0x3	BOTH	Sense both edges

chanhvinh.com

chanhvinh.com

29.5.7 Interrupt Flag

Name: INTFLAGS
Offset: 0x07
Reset: 0x00
Property: -

Bit	7	6	5	4	3	2	1	0
			INT5	INT4	INT3	INT2	INT1	INT0
Access			R/W	R/W	R/W	R/W	R/W	R/W
Reset			0	0	0	0	0	0

Bits 0, 1, 2, 3, 4, 5 – INT Interrupt Flag
The INTn flag is set when the LUTn output change matches the Interrupt Sense mode as defined in CCL.INTCTRLn. Writing a '1' to this flag's bit location will clear the flag.

chanhvinh.com

29.5.8 LUT n Control A

Name: LUTnCTRLA
Offset: 0x08 + n*0x04 [n=0..5]
Reset: 0x00
Property: Enable-Protected

Bit	7	6	5	4	3	2	1	0
	EDGEDET	OUTEN	FILTSEL[1:0]		CLKSRC[2:0]			ENABLE
Access	R/W	R/W	R/W	R/W	R/W	R/W	R/W	R/W
Reset	0	0	0	0	0	0	0	0

Bit 7 – EDGEDET Edge Detection

Value	Description
0	Edge detector is disabled
1	Edge detector is enabled

Bit 6 – OUTEN Output Enable
This bit enables the LUT output to the LUTn OUT pin. When written to '1', the pin configuration of the PORT I/O-Controller is overridden.

Value	Description
0	Output to pin disabled
1	Output to pin enabled

Bits 5:4 – FILTSEL[1:0] Filter Selection
These bits select the LUT output filter options.

Value	Name	Description
0x0	DISABLE	Filter disabled
0x1	SYNCH	Synchronizer enabled
0x2	FILTER	Filter enabled
0x3	-	Reserved

Bits 3:1 – CLKSRC[2:0] Clock Source Selection
This bit selects between various clock sources to be used as the clock (CLK_LUTn) for an LUT.
The CLK_LUTn of the even LUT is used for clocking the sequencer of an LUT pair.

Value	Input Source	Description
0x0	CLKPER	CLK_PER is clocking the LUT
0x1	LUTn-TRUTHSEL[2]	LUTn-TRUTHSEL[2] is clocking the LUTn
0x2	-	Reserved
0x3	-	Reserved
0x4	OSCHF	Internal high-frequency oscillator before prescaler is clocking LUT
0x5	OSC32K	Internal 32.786 kHz oscillator
0x6	OSC1K	Internal 32.768 kHz oscillator divided by 32
0x07	-	Reserved

Bit 0 – ENABLE LUT Enable

Value	Description
0	The LUT is disabled
1	The LUT is enabled

© 2021 Microchip Technology Inc.
and its subsidiaries

chanhvinh.com

29.5.9 LUT n Control B

Name: LUTnCTRLB
Offset: 0x09 + n*0x04 [n=0..5]
Reset: 0x00
Property: Enable-Protected

Notes:

1. SPI connections to the CCL work in Host SPI mode only.
2. USART connections to the CCL work only when the USART is in one of the following modes:
   – Asynchronous USART
   – Synchronous USART host

Bit	7	6	5	4	3	2	1	0
	INSEL1[3:0]				INSEL0[3:0]			
Access	R/W	R/W	R/W	R/W	R/W	R/W	R/W	R/W
Reset	0	0	0	0	0	0	0	0

Bits 7:4 – INSEL1[3:0] LUT n Input 1 Source Selection
These bits select the source for input 1 of LUT n.

Value	Name	Description
0x0	MASK	Masked input
0x1	FEEDBACK	Feedback input
0x2	LINK	Output from LUT[n+1] as input source
0x3	EVENTA	Event A as input source
0x4	EVENTB	Event B as input source
0x5	IN1	IN1 input source
0x6	AC1	AC1 OUT input source
0x7	ZCD1	ZCD1 OUT input source
0x8	USART1	USART1 TXD input source
0x9	SPI0	SPI0 MOSI input source
0xA	TCA0	TCA0 WO1 input source
0xB	TCA1	TCA1 WO1 input source
0xC	TCB1	TCB1 WO input source
0xD	TCD0	TCD0 WOB input source
Other	-	Reserved

Bits 3:0 – INSEL0[3:0] LUT n Input 0 Source Selection
These bits select the source for input 0 of LUT n.

Value	Name	Description
0x0	MASK	Masked input
0x1	FEEDBACK	Feedback input
0x2	LINK	Output from LUT[n+1] as input source
0x3	EVENTA	Event A as input source
0x4	EVENTB	Event B as input source
0x5	IN0	IN0 input source
0x6	AC0	AC0 OUT input source
0x7	ZCD0	ZCD0 OUT input source
0x8	USART0	USART0 TXD input source
0x9	SPI0	SPI0 MOSI input source
0xA	TCA0	TCA WO0 input source
0xB	TCA1	TCA1 WO0 input source

© 2021 Microchip Technology Inc.
and its subsidiaries

chanhvinh.com

.....continued		
Value	**Name**	**Description**
0xC	TCB0	TCB0 WO input source
0xD	TCD0	TCD0 WOA input source
Other	-	Reserved

chanhvinh.com

chanhvinh.com

29.5.10 LUT n Control C

Name: LUTnCTRLC
Offset: 0x0A + n*0x04 [n=0..5]
Reset: 0x00
Property: Enable-Protected

Bit	7	6	5	4	3	2	1	0
					INSEL2[3:0]			
Access					R/W	R/W	R/W	R/W
Reset					0	0	0	0

Bits 3:0 – INSEL2[3:0] LUT n Input 2 Source Selection
These bits select the source for input 2 of LUT n.

Value	Name	Description
0x0	MASK	Masked input
0x1	FEEDBACK	Feedback input
0x2	LINK	Output from LUT[n+1] as input source
0x3	EVENTA	Event A as input source
0x4	EVENTB	Event B as input source
0x5	IN2	IN2 input source
0x6	AC2	AC2 OUT input source
0x7	ZCD2	ZCD2 OUT input source
0x8	USART2	USART2 TXD input source
0x9	SPI0	SPI0 SCK input source
0xA	TCA0	TCA0 WO2 input source
0xB	TCA1	TCA1 WO2 input source
0xC	TCB2	TCB2 WO input source
0xD	TCD0	TCD0 WOC input source
Other	-	Reserved

© 2021 Microchip Technology Inc.
and its subsidiaries

chanhvinh.com

29.5.11 TRUTHn

Name: TRUTHn
Offset: 0x0B + n*0x04 [n=0..5]
Reset: 0x00
Property: Enable-Protected

Bit	7	6	5	4	3	2	1	0
	TRUTHn[7:0]							
Access	R/W	R/W	R/W	R/W	R/W	R/W	R/W	R/W
Reset	0	0	0	0	0	0	0	0

Bits 7:0 – TRUTHn[7:0] Truth Table
These bits determine the output of LUTn according to the LUTn-TRUTHSEL[2:0] inputs.

Bit Name	Value	Description
TRUTHn[0]	0	The output of LUTn is 0 when the inputs are 'b000
	1	The output of LUTn is 1 when the inputs are 'b000
TRUTHn[1]	0	The output of LUTn is 0 when the inputs are 'b001
	1	The output of LUTn is 1 when the inputs are 'b001
TRUTHn[2]	0	The output of LUTn is 0 when the inputs are 'b010
	1	The output of LUTn is 1 when the inputs are 'b010
TRUTHn[3]	0	The output of LUTn is 0 when the inputs are 'b011
	1	The output of LUTn is 1 when the inputs are 'b011
TRUTHn[4]	0	The output of LUTn is 0 when the inputs are 'b100
	1	The output of LUTn is 1 when the inputs are 'b100
TRUTHn[5]	0	The output of LUTn is 0 when the inputs are 'b101
	1	The output of LUTn is 1 when the inputs are 'b101
TRUTHn[6]	0	The output of LUTn is 0 when the inputs are 'b110
	1	The output of LUTn is 1 when the inputs are 'b110
TRUTHn[7]	0	The output of LUTn is 0 when the inputs are 'b111
	1	The output of LUTn is 1 when the inputs are 'b111

© 2021 Microchip Technology Inc.
and its subsidiaries

chanhvinh.com

30. AC - Analog Comparator

30.1 Features

- Selectable Response Time
- Selectable Hysteresis
- Analog Comparator Output Available on Pin
- Comparator Output Inversion Available
- Flexible Input Selection:
  - 4 positive pins
  - 3 negative pins
  - Internal reference voltage generator (DACREF)
- Interrupt Generation on:
  - Rising edge
  - Falling edge
  - Both edges
- Window Function Interrupt Generation on:
  - Signal above the window
  - Signal inside the window
  - Signal below the window
  - Signal outside the window
- Event Generation:
  - Comparator output
  - Window function

30.2 Overview

The analog comparator (AC) compares the voltage levels on two inputs and gives a digital output based on this comparison. The AC can be configured to generate interrupt requests and/or events based on several different combinations of input change.

The input selection includes analog port pins and internally generated inputs. The AC digital output goes through controller logic, enabling customization of the signal for use internally with the Event System or externally on the pin.

The dynamic behavior of the AC can be adjusted by a hysteresis feature. The hysteresis can be customized to optimize the operation for each application.

The individual comparators can be used independently (Normal mode) or paired to form a window comparison (Window mode).

chanhvinh.com

chanhvinh.com

30.2.1 Block Diagram

Figure 30-1. AC Block Diagram

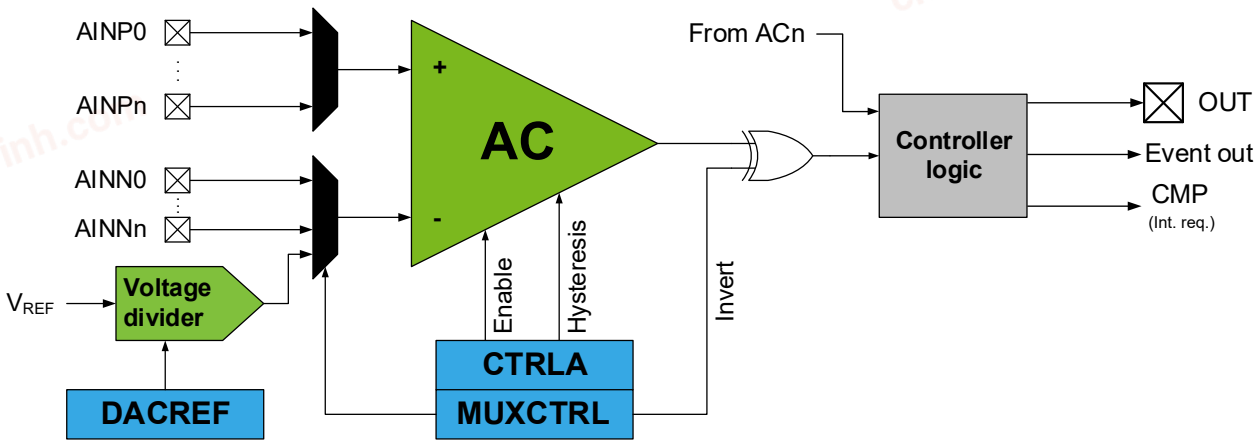

30.2.2 Signal Description

Signal	Description	Type
AINNn	Negative input n	Analog
AINPn	Positive input n	Analog
OUT	Comparator output of AC	Digital

30.3 Functional Description

30.3.1 Initialization

For basic operation, follow these steps:

1. Configure the desired input pins in the port peripheral as analog inputs.
2. Select the positive and negative input sources by writing to the Positive and Negative Input MUX Selection (MUXPOS and MUXNEG) bit fields in the MUX Control (ACn.MUXCTRL) register.
3. Optional: Enable the output to pin by writing a '1' to the Output Pad Enable (OUTEN) bit in the Control A (ACn.CTRLA) register.
4. Enable the AC by writing a '1' to the ENABLE bit in ACn.CTRLA.

During the start-up time after enabling the AC, the INITVAL bit in the CTRLB register can be used to set the AC output before the AC is ready. If V_{REF} is used as a reference source, the respective start-up time of the reference source must be added. For details about the start-up time of the AC and VREF peripherals, refer to the *Electrical Characteristics* section.

To avoid the pin being tri-stated when the AC is disabled, the OUT pin must be configured as output.

30.3.2 Operation

30.3.2.1 Input Hysteresis

Applying an input hysteresis helps to prevent constant toggling of the output when the noise-afflicted input signals are close to each other.

The input hysteresis can either be disabled or have one of three levels. The hysteresis is configured by writing to the Hysteresis Mode Select (HYSMODE) bit field in the Control A (ACn.CTRLA) register. For details about typical values of hysteresis levels, refer to the *Electrical Characteristics* section.

chanhvinh.com

30.3.2.2 Input and Reference Selection

The input selection to the ACn is controlled by the Positive and Negative Multiplexers (MUXPOS and MUXNEG) bit fields in the MUX Control (ACn.MUXCTRL) register. For positive input of ACn, an analog pin can be selected, while for negative input, the selection can be made between analog pins and internal DAC reference voltage (DACREF). For details about the possible selections, refer to the MUX Control (ACn.MUXCTRL) register description.

The generated voltage depends on the DACREF register value and the reference voltage selected in the VREF module, and is calculated as:

$$V_{\mathrm{DACREF}} = \frac{\mathrm{DACREF}}{256} \times V_{\mathrm{REF}}$$

The internal reference voltages (V_{REF}), except for V_{REFA} and V_{DD}, are generated from an internal band gap reference.

After switching inputs to I/O pins or setting a new voltage reference, the ACn requires time to settle. Refer to the *Electrical Characteristics* section for more details.

30.3.2.3 Normal Mode

The AC has one positive input and one negative input. The output of the comparator is '1' when the difference between the positive and the negative input voltage is positive, and '0' otherwise. This output is available on the output pin (OUT) through a logic XOR gate. This allows the inversion of the OUT pin when the INVERT bit in the MUX Control (ACn.MUXCTRL) register is '1'.

To avoid random output and set a specific level on the OUT pin during the ACn initialization, the INITVAL bit in the same register is used.

30.3.2.4 Power Modes

For power sensitive applications, the AC provides multiple power modes with balance power consumption and response time. A mode is selected by writing to the Power Profile (POWER) bit field in the Control A (ACn.CTRLA) register.

30.3.2.5 Window Mode

Each AC (i.e., ACx) can be configured to work together with another comparator (i.e., ACy) in Window mode. In this mode, a voltage range (the window) is defined, and the selected comparator indicates whether an input signal is within this range or not.

The WINSEL bit field in the Control B (ACn.CTRLB) register selects which ACy instance is connected to the current comparator (ACx) to create the window comparator. The user is responsible for configuring the MUXPOS and MUXNEG bit fields in the MUX Control (ACn.MUXCTRL) register for ACx and ACy, so they match the setup in the figure below. Note that the MUXPOS bit field in the ACn.MUXCTRL register of both ACs must be configured to the same pin.

© 2021 Microchip Technology Inc.
and its subsidiaries

chanhvinh.com

Figure 30-2. Analog Comparators in Window Mode

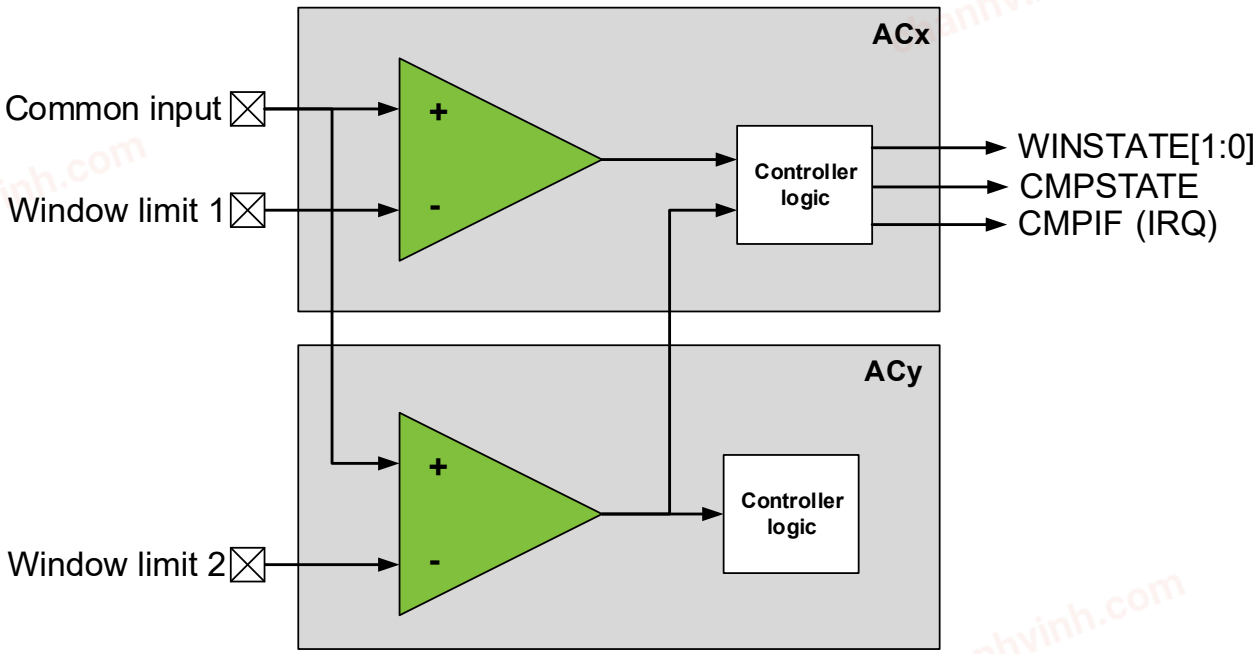

The status of the input signal is reported by the Window State (WINSTATE) flags in the Status (ACn.STATUS) register. The status can be:

- Above the window - the input signal is above the upper limit
- Inside the window - the input signal is between the lower and upper limits
- Below the window - the input signal is below the lower limit

Writing to the INTMODE bit field in the Interrupt Control (INTCTRL) register selects one of these window modes for triggering an event or requesting an interrupt:

- Above the window - the interrupt/event is issued when the input signal is above the upper limit
- Inside the window - the interrupt/event is issued when the input signal is between the lower and upper limits
- Below the window - the interrupt/event is issued when the input signal is below the lower limit
- Outside the window - the interrupt/event is issued when the input signal is not between the lower and upper limits

The CMPSTATE bit is '1' when the Window state matches the selected Interrupt Mode (INTMODE) bit field and '0' otherwise.

The window interrupt is enabled by writing a '1' to the Analog Comparator Interrupt Enable (CMP) bit in the Interrupt Control (ACn.INTCTRL) register.

30.3.3 Events

The AC can generate the following events:

Table 30-1. Event Generators in AC

Generator Name		Description	Event Type	Generating Clock Domain	Length of Event
Module	Event				
ACn	OUT	Comparator output level	Level	Asynchronous	Given by AC output level

The AC has no event users.

Refer to the *EVSYS - Event System* section for more details regarding event types and Event System configuration.

chanhvinh.com

30.3.4 Interrupts

Table 30-2. Available Interrupt Vectors and Sources

Name	Vector Description	Conditions
CMP	Analog comparator interrupt	AC output is toggling as configured by INTMODE in ACn.INTCTRL

When an interrupt condition occurs, the corresponding interrupt flag is set in the Status (ACn.STATUS) register.

An interrupt source is enabled or disabled by writing to the corresponding bit in the peripheral's Interrupt Control (ACn.INTCTRL) register.

The AC can generate a comparator interrupt, CMP, and can request this interrupt on either rising, falling, or both edges of the toggling comparator output. This is configured by writing to the Interrupt Mode (INTMODE) bit field in the Interrupt Control (ACn.INTCTRL) register. The interrupt is enabled by writing a '1' to the Analog Comparator Interrupt Enable (CMP) bit in the Interrupt Control (ACn.INTCTRL) register. The interrupt request remains active until the interrupt flag is cleared. Refer to the Status (ACn.STATUS) register description for details on how to clear the interrupt flags.

30.3.5 Sleep Mode Operation

In Idle sleep mode the AC will continue to operate as normal.

In Standby sleep mode the AC is disabled by default. If the Run in Standby Mode (RUNSTDBY) bit in the Control A (ACn.CTRLA) register is written to '1', the AC will continue to operate as normal with an event, interrupt and AC output on the pin even if the CLK_PER is not running in Standby sleep mode.

In Power-Down sleep mode the AC and the output to the pad are disabled.

© 2021 Microchip Technology Inc.
and its subsidiaries

chanhvinh.com

30.4 Register Summary

Offset	Name	Bit Pos.	7	6	5	4	3	2	1	0
0x00	CTRLA	7:0	RUNSTDBY	OUTEN		POWER[1:0]		HYSMODE[1:0]		ENABLE
0x01	CTRLB	7:0							WINSEL[1:0]	
0x02	MUXCTRL	7:0	INVERT	INITVAL	MUXPOS[2:0]			MUXNEG[2:0]		
0x03 ... 0x04	Reserved									
0x05	DACREF	7:0	DACREF[7:0]							
0x06	INTCTRL	7:0			INTMODE[1:0]					CMP
0x07	STATUS	7:0	WINSTATE[1:0]			CMPSTATE				CMPIF

30.5 Register Description

© 2021 Microchip Technology Inc.
and its subsidiaries

chanhvinh.com

30.5.1 Control A

Name: CTRLA
Offset: 0x00
Reset: 0x00
Property: -

Bit	7	6	5	4	3	2	1	0
	RUNSTDBY	OUTEN		POWER[1:0]		HYSMODE[1:0]		ENABLE
Access	R/W	R/W		R/W	R/W	R/W	R/W	R/W
Reset	0	0		0	0	0	0	0

Bit 7 – RUNSTDBY Run in Standby Mode
Writing this bit to '1' allows the AC to continue operation in Standby sleep mode. Since the clock is stopped, interrupts and status flags are not updated.

Value	Description
0	In Standby sleep mode, the peripheral is halted
1	In Standby sleep mode, the peripheral continues operation

Bit 6 – OUTEN Output Pad Enable
Writing this bit to '1' makes the OUT signal available on the pin.

Bits 4:3 – POWER[1:0] Power Profile
This setting controls the current through the comparator, which allows the AC to trade power consumption for the response time. Refer to the *Electrical Characteristics* section for power consumption and response time.

Value	Name	Description
0x0	PROFILE0	Power profile 0. Shortest response time and highest consumption.
0x1	PROFILE1	Power profile 1
0x2	PROFILE2	Power profile 2
0x3	-	Reserved

Bits 2:1 – HYSMODE[1:0] Hysteresis Mode Select
Writing to this bit field selects the Hysteresis mode for the AC input. For details about typical values of hysteresis levels, refer to the *Electrical Characteristics* section.

Value	Name	Description
0x0	NONE	No hysteresis
0x1	SMALL	Small hysteresis
0x2	MEDIUM	Medium hysteresis
0x3	LARGE	Large hysteresis

Bit 0 – ENABLE Enable AC
Writing this bit to '1' enables the AC.

chanhvinh.com

30.5.2 Control B

Name: CTRLB
Offset: 0x01
Reset: 0x00
Property: -

Bit	7	6	5	4	3	2	1	0
							WINSEL[1:0]	
Access							R/W	R/W
Reset							0	0

Bits 1:0 – WINSEL[1:0] Window Selection Mode
This bit field selects the AC connected to the current comparator in Window mode.

Value	Name	Description
0x0	DISABLED	Window function disabled
0x1	UPSEL1	Windows enabled, with ACn+1 connected
0x2	UPSEL2	Windows enabled, with ACn+2 connected
0x3	-	Reserved

© 2021 Microchip Technology Inc.
and its subsidiaries

chanhvinh.com

30.5.3 MUX Control

Name: MUXCTRL
Offset: 0x02
Reset: 0x00
Property: -

Bit	7	6	5	4	3	2	1	0
	INVERT	INITVAL	MUXPOS[2:0]			MUXNEG[2:0]		
Access	R/W	R/W	R/W	R/W	R/W	R/W	R/W	R/W
Reset	0	0	0	0	0	0	0	0

Bit 7 – INVERT Invert AC Output
Writing this bit to '1' enables inversion of the output of the AC. This inversion has to be taken into account when using the AC output signal as an input signal to other peripherals or parts of the system.

Bit 6 – INITVAL AC Output Initial Value
To avoid that the AC output toggles before the comparator is ready, the INITVAL can be used to set the initial state of the comparator output.

Value	Name	Description
0x0	LOW	Output initialized to '0'
0x1	HIGH	Output initialized to '1'

Bits 5:3 – MUXPOS[2:0] Positive Input MUX Selection
Writing to this bit field selects the input signal to the positive input of the AC.

Value	Name	Description
0x0	AINP0	Positive Pin 0
0x1	AINP1	Positive Pin 1
0x2	AINP2	Positive Pin 2
0x3	AINP3	Positive Pin 3
Other	-	Reserved

Bits 2:0 – MUXNEG[2:0] Negative Input MUX Selection
Writing to this bit field selects the input signal to the negative input of the AC.

Value	Name	Description
0x0	AINN0	Negative Pin 0
0x1	AINN1	Negative Pin 1
0x2	AINN2	Negative Pin 2
0x3	DACREF	DAC Reference
Other	-	Reserved

© 2021 Microchip Technology Inc.
and its subsidiaries

chanhvinh.com

30.5.4 DAC Voltage Reference

Name: DACREF
Offset: 0x05
Reset: 0xFF
Property: R/W

Bit	7	6	5	4	3	2	1	0
	DACREF[7:0]							
Access	R/W	R/W	R/W	R/W	R/W	R/W	R/W	R/W
Reset	1	1	1	1	1	1	1	1

Bits 7:0 – DACREF[7:0] DACREF Data Value
This bit field defines the output voltage from the internal voltage divider. The DAC voltage reference depends on the DACREF value and the reference voltage selected in the VREF module, and is calculated as:

$$V_{\mathrm{DACREF}} = \frac{\mathrm{DACREF}[7:0]}{256} \times V_{\mathrm{REF}}$$

chanhvinh.com

30.5.5 Interrupt Control

Name: INTCTRL
Offset: 0x06
Reset: 0x00
Property: -

Bit	7	6	5	4	3	2	1	0
			INTMODE[1:0]					CMP
Access			R/W	R/W				R/W
Reset			0	0				0

Bits 5:4 – INTMODE[1:0] Interrupt Mode
Writing to this bit field selects which edge(s) of the AC output or when entering a window state triggers an interrupt request.

Table 30-3. Interrupt Generation in Window Mode

Value	Name	Description
0x0	ABOVE	Enables Window mode above interrupt
0x1	INSIDE	Enables Window mode inside interrupt
0x2	BELOW	Enables Window mode below interrupt
0x3	OUTSIDE	Enables Window mode outside interrupt

Table 30-4. Interrupt Generation with Single Comparator

Value	Name	Description
0x0	BOTHEDGE	Positive and negative inputs crosses
0x1	-	Reserved
0x2	NEGEDGE	Positive input goes below negative input
0x3	POSEDGE	Positive input goes above negative input

Bit 0 – CMP AC Interrupt Enable
This bit enables the AC interrupt. The enabled interrupt will be triggered when the CMPIF bit in the ACn.STATUS register is set.

© 2021 Microchip Technology Inc.
and its subsidiaries

chanhvinh.com

30.5.6 Status

Name: STATUS
Offset: 0x07
Reset: 0x00
Property: -

Bit	7	6	5	4	3	2	1	0
	WINSTATE[1:0]			CMPSTATE				CMPIF
Access	R	R		R				R/W
Reset	0	0		0				0

Bits 7:6 – WINSTATE[1:0] Window State
When the window function is enabled, these flags indicate the current status of the input signal with respect to the window.
Not valid when the Window mode is disabled.

Table 30-5. Window State Settings

Value	Name	Description
0x0	ABOVE	Above window
0x1	INSIDE	Inside window
0x2	BELOW	Below window
Other	-	Reserved

Bit 4 – CMPSTATE AC State
If this bit is '1', the OUT signal is high. If this bit is '0', the OUT signal is low. In Window mode, and if this bit is '1', the Window state matches the selected Interrupt mode (INTMODE) bit field. If INTMODE is 'OUTSIDE', both 'ABOVE' and 'BELOW' are valid matches. It will have a synchronizer delay to get updated in the I/O register (three cycles).

Bit 0 – CMPIF AC Interrupt Flag
This bit is '1' when the OUT signal matches the Interrupt Mode (INTMODE) bit field as defined in the ACn.INTCTRL register. Writing a '1' to this flag bit location will clear the flag.

chanhvinh.com

31. ADC - Analog-to-Digital Converter

31.1 Features

- 12-Bit Resolution
- Up to 130 ksps at 12-Bit Resolution
- Differential and Single-Ended Conversion
- Up to 22 Inputs
- Rail-to-Rail Input Voltage Range
- Free-Running and Single Conversion
- Accumulation of Up to 128 Samples per Conversion
- Multiple Voltage Reference Options
- Temperature Sensor Input Channel
- Programmable Input Sampling Duration
- Configurable Threshold and Window Comparator
- Event Triggered Conversion
- Interrupt and Event on Conversion Complete

31.2 Overview

The Analog-to-Digital Converter (ADC) is a 12-bit Successive Approximation Register (SAR) ADC, with a sampling rate up to 130 ksps at 12-bit resolution. The ADC is connected to an analog input multiplexer for selection between multiple single-ended or differential inputs. In single-ended conversions, the ADC measures the voltage between the selected input and 0V (GND). In differential conversions, the ADC measures the voltage between two selected input channels. The selected ADC input channels can either be internal (e.g., a voltage reference) or external analog input pins.

An ADC conversion can be started by software, or by using the Event System (EVSYS) to route an event from other peripherals. This makes it possible to do a periodic sampling of input signals, trigger an ADC conversion on a special condition or trigger an ADC conversion in Standby sleep mode.

A digital window compare feature is available for monitoring the input signal and can be configured only to trigger an interrupt if the sample is below or above a user-defined threshold, or inside or outside a user-defined window, with minimum software intervention required.

The ADC input signal is fed through a sample-and-hold circuit which ensures that the input voltage to the ADC is held at a constant level during sampling.

The ADC supports sampling in bursts where a configurable number of conversions are accumulated into a single ADC result (Sample Accumulation). Furthermore, a sample delay can be configured to tune the ADC burst sampling frequency away from any harmonic noise aliased from the sampled signal.

The ADC voltage reference is configured in the Voltage Reference (VREF) peripheral and can use one of the following sources as voltage reference:

- Multiple Internally Generated Voltages
- AV_{DD} Supply Voltage
- External VREF Pin (VREFA)

This device has one instance of the ADC peripheral: ADC0.

chanhvinh.com

31.2.1 Block Diagram

Figure 31-1. Block Diagram

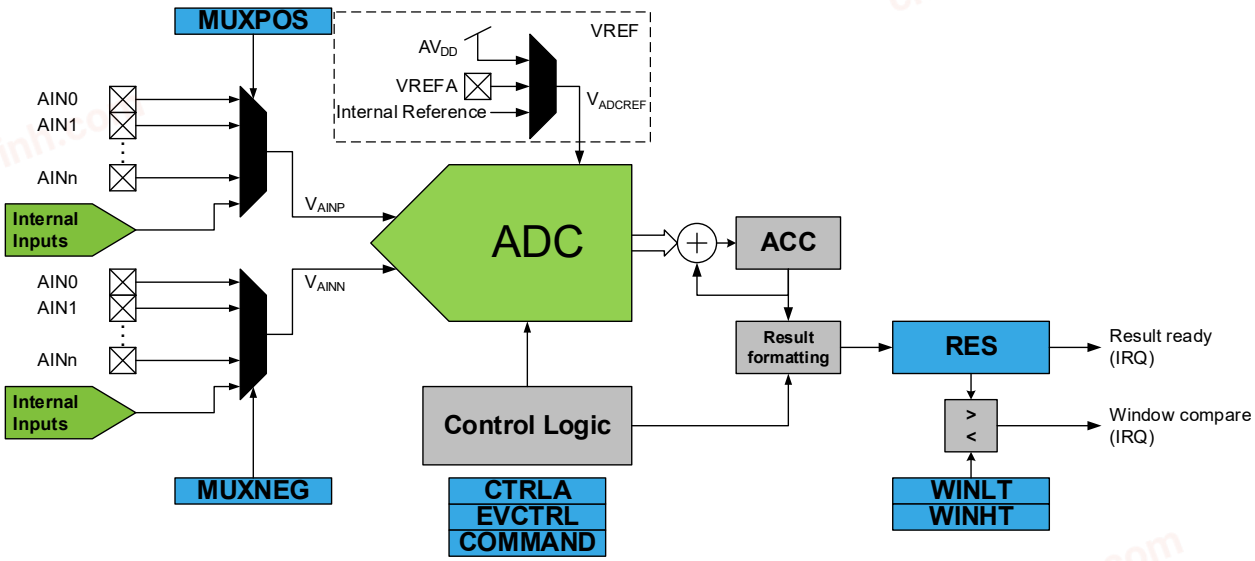

31.2.2 Signal Description

Pin Name	Type	Description
AIN[n:0]	Analog input	Analog input to be converted
VREFA	Analog input	External voltage reference pin

31.3 Functional Description

31.3.1 Definitions

- Conversion: The operation in which analog values on the selected ADC inputs are transformed into a digital representation.
- Sample: The output of a single ADC conversion.
- Result: The value placed in the Result (ADCn.RES) register. Depending on the ADC configuration, this value is a single sample or the sum of multiple accumulated samples.

31.3.2 Initialization

The following steps are recommended to initialize ADC operation:

1. Configure the ADC voltage reference in the Voltage Reference (VREF) peripheral.
2. Optional: Select between Single-Ended or Differential mode by writing to the Conversion Mode (CONVMODE) bit in the Control A (ADCn.CTRLA) register.
3. Configure the resolution by writing to the Resolution Selection (RESSEL) bit field in the ADCn.CTRLA register.
4. Optional: Configure to left adjust by writing a '1' to the Left Adjust Result (LEFTADJ) bit in the ADCn.CTRLA register.
5. Optional: Select the Free-Running mode by writing a '1' to the Free-Running (FREERUN) bit in the ADCn.CTRLA register.
6. Optional: Configure the number of samples to be accumulated per conversion by writing to the Sample Accumulation Number Select (SAMPNUM) bit field in the Control B (ADCn.CTRLB) register.
7. Configure the ADC clock (CLK_ADC) by writing to the Prescaler (PRESC) bit field in the Control C (ADCn.CTRLC) register.

© 2021 Microchip Technology Inc.
and its subsidiaries

chanhvinh.com

8. Select the positive ADC input by writing to the MUXPOS bit field in the ADCn.MUXPOS register.
9. Optional: Select the negative ADC input by writing to the MUXNEG bit field in the ADCn.MUXNEG register.
10. Optional: Enable Start Event input by writing a '1' to the Start Event Input (STARTEI) bit in the Event Control (ADCn.EVCTRL) register, and configure the Event System accordingly.
11. Enable the ADC by writing a '1' to the ADC Enable (ENABLE) bit in the ADCn.CTRLA register.

Following these steps will initialize the ADC for basic measurements.

For details about the start-up time of the VREF peripheral, refer to the *Electrical Characteristics* section.

The ADC does not consume power when the ENABLE bit is '0'. The ADC generates a 10- or 12-bit result which can be read from the Result (ADCn.RES) register.

Notes: Changing the following registers during a conversion will give unpredictable results:

- In ADCn.CTRLA:
  - Conversion Mode (CONVMODE) bit
  - Left Adjust Result (LEFTADJ) bit
  - Resolution Selection (RESSEL) bit field
- In ADCn.CTRLB:
  - Sample Accumulation Number Select (SAMPNUM) bit field
- In ADCn.CTRLC:
  - Prescaler (PRESC) bit field

31.3.3 Operation

31.3.3.1 Operation Modes

The ADC supports differential and single-ended conversions. This is configured in the CONVMODE bit in the ADCn.CTRLA register.

The operation modes can be split into two groups:

- Single conversion of one sample per trigger
- Accumulated conversion of n conventions per trigger, the result is accumulated

The accumulated conversion utilizes 12-bit conversions and can be configured with or without truncation of the accumulated result. The accumulator is always reset to zero when a new accumulated conversion is started.

31.3.3.2 Starting a Conversion

The ADC needs a time t_{warm_up} to initialize after writing a '1' to the ENABLE bit in the Control A (ADCn.CTRLA) register. This delay can be implemented manually in code or by configuring the Initialization Delay (INITDLY) bit field in the Control D (ADCn.CTRLD) register to a value ≥ t_{warm_up} x f_{CLK_ADC}. Refer to the *Electrical Characteristics* section for further information.

Once the initialization is finished, a conversion is started by writing a '1' to the ADC Start Conversion (STCONV) bit in the Command (ADCn.COMMAND) register. This bit is '1' as long as the conversion is in progress. The STCONV bit will be set during a conversion and cleared once the conversion is complete.

If a different input channel is selected while a conversion is in progress, the ADC will finish the current conversion before changing the channel.

Depending on the accumulator setting, the conversion result is a single sample, or an accumulation of samples. Once the triggered operation is finished, the Result Ready (RESRDY) flag in the Interrupt Flags (ADCn.INTFLAGS) register is set. The corresponding interrupt vector is executed if the Result Ready Interrupt Enable (RESRDY) bit in the Interrupt Control (ADCn.INTCTRL) register is '1' and the Global Interrupt Enable bit is '1'.

The RESRDY interrupt flag in the ADCn.INTFLAGS register will be set even if the specific interrupt is disabled, allowing software to check for any finished conversion by polling the flag. A conversion can thus be triggered without causing an interrupt upon completion.

Alternatively, a conversion can be triggered by an event. This is enabled by writing a '1' to the Start Event Input (STARTEI) bit in the Event Control (ADCn.EVCTRL) register. Any incoming event routed to the ADC through the Event System (EVSYS) will trigger an ADC conversion. This provides a method to start conversions with predictable intervals or at specific conditions.

© 2021 Microchip Technology Inc. and its subsidiaries

chanhvinh.com

The ADC will trigger a conversion on the rising edge of an event signal. When an event occurs, the STCONV bit in the ADCn.COMMAND register is set and it will be cleared when the conversion is complete. Refer to Figure 31-2.

Figure 31-2. ADC Event Trigger Logic

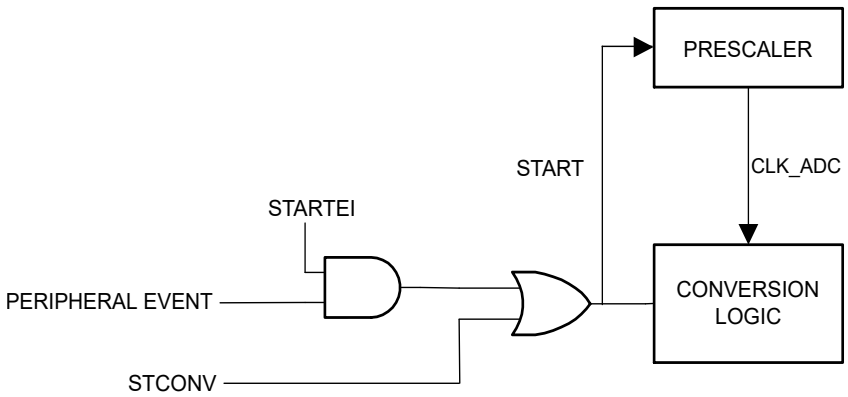

In Free-Running mode, the first conversion is started by writing a '1' to the STCONV bit in the ADCn.COMMAND register. A new conversion cycle is started immediately after the previous conversion cycle has completed. A completed conversion will set the RESRDY flag in the ADCn.INTFLAGS register.

31.3.3.3 Clock Generation

The ADC peripheral contains a prescaler which generates the ADC clock (CLK_ADC) from the peripheral clock (CLK_PER). The minimum ADC_CLK frequency is 150 kHz. The prescaling is selected by writing to the Prescaler (PRESC) bit field in the Control C (ADCn.CTRLC) register. The prescaler begins counting from the moment the ADC conversion starts and is reset for every new conversion. Refer to Figure 31-3.

Figure 31-3. ADC Prescaler

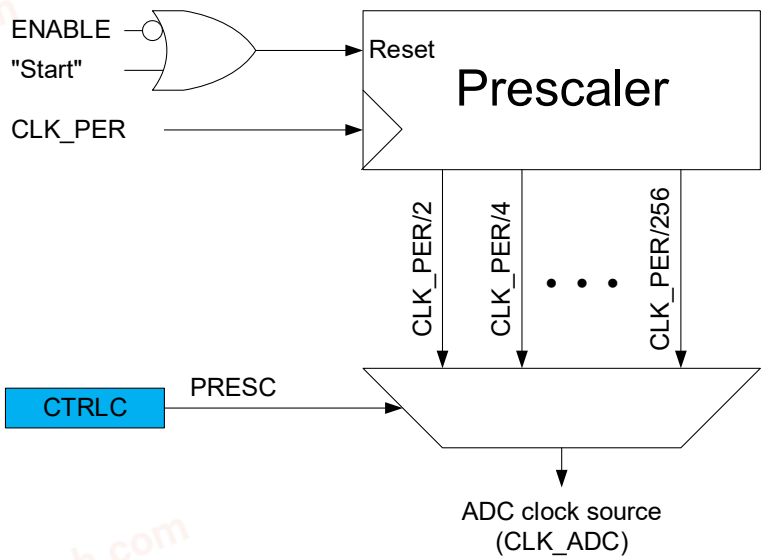

When initiating a conversion by writing a '1' to the Start Conversion (STCONV) bit in the ADCn.COMMAND register or from event, the conversion starts after one CLK_PER cycle. The prescaler is kept in Reset, as long as there is no ongoing conversion. This assures a fixed delay from the trigger to the actual start of a conversion of maximum 2 CLK_PER cycles.

31.3.3.4 Conversion Timing

A normal conversion takes place in the following order:

1. Write a '1' to the STCONV bit in the Command (ADCn.COMMAND) register.
2. Start-up for maximum 2 CLK_PER cycles.
3. Sample-and-hold for 2 CLK_ADC cycles.

chanhvinh.com

4. Conversion for 13.5 CLK_ADC cycles.
5. Result formatting for 2 CLK_PER cycles.

When a conversion is complete, the result is available in the Result (ADCn.RES) register, and the Result Ready (RESRDY) interrupt flag is set in the Interrupt Flags (ADCn.INTFLAGS) register.

31.3.3.4.1 Single Conversion

The figure below shows the timing diagram for a single 12-bit ADC conversion.

Figure 31-4. Timing Diagram - Single Conversion

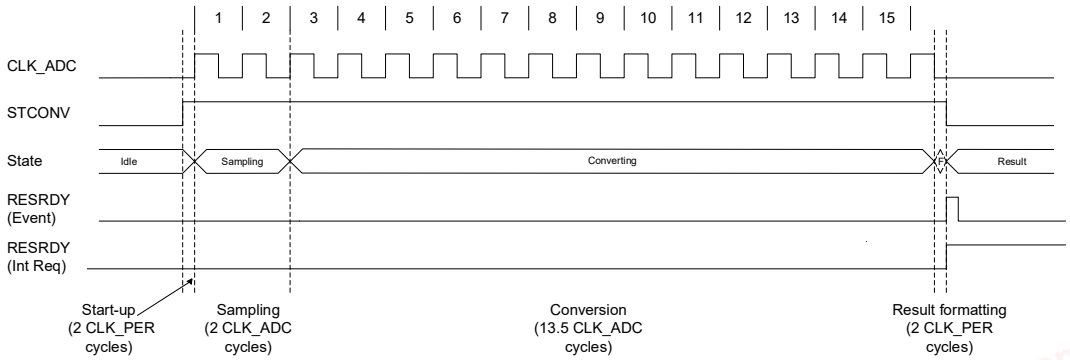

For a single conversion, the total conversion time is calculated by:

$$\text{Total Conversion Time (12-bit)} = \frac{13.5 + 2}{f_{\text{CLK_ADC}}} + \frac{4}{f_{\text{CLK_PER}}}$$

31.3.3.4.2 Accumulated Conversion

The figure below shows the timing diagram for the ADC when accumulating two samples in Accumulation mode.

Figure 31-5. Timing Diagram - Accumulated Conversion

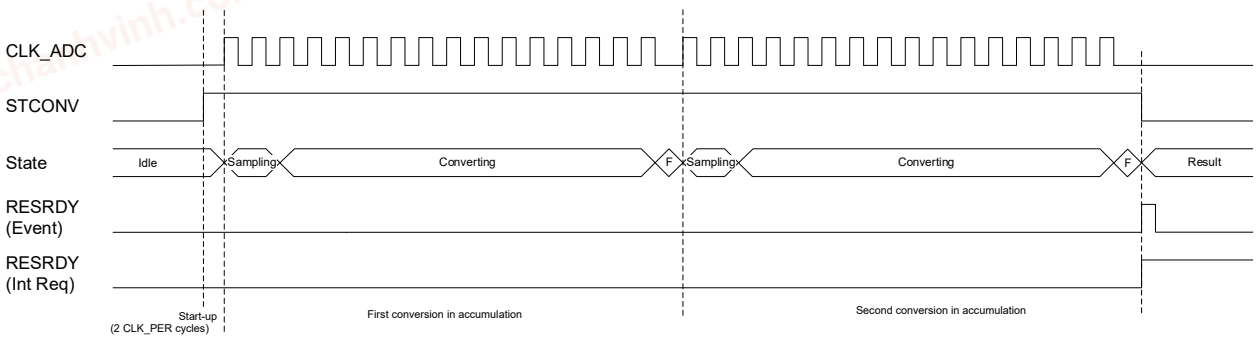

The number of samples to accumulate is configured with the Sample Number (SAMPNUM) bit field in the Control B (ADCn.CTRLB) register. The STCONV bit is set for the entire conversion. The total conversion time for n samples is given by:

$$\text{Total Conversion Time (12-bit)} = \frac{2}{f_{\text{CLK_PER}}} + n\left(\frac{13.5 + 2}{f_{\text{CLK_ADC}}} + \frac{2}{f_{\text{CLK_PER}}}\right)$$

31.3.3.4.3 Free-Running Conversion

In Free-Running mode, a new conversion is started as soon as the previous conversion has completed. This is signaled by the RESRDY bit in the Interrupt Flags (ADCn.INTFLAGS) register.

The figure below shows the timing diagram for the ADC in Free-Running mode with single conversion.

© 2021 Microchip Technology Inc.
and its subsidiaries

chanhvinh.com

Figure 31-6. Timing Diagram - Free-Running Conversion

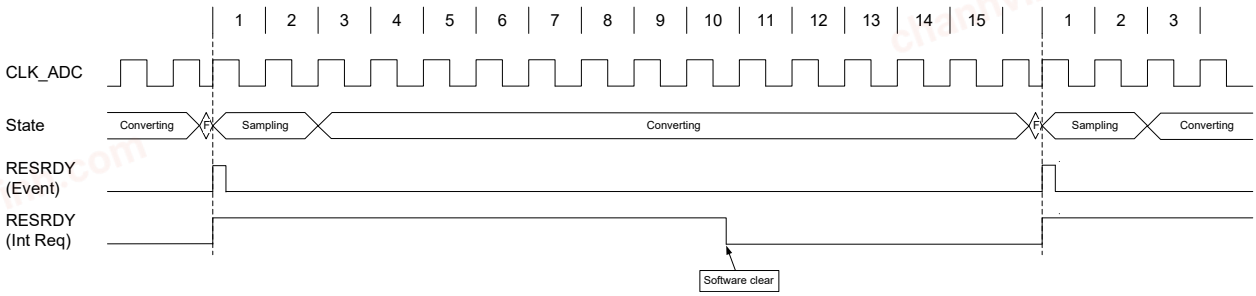

The Result Ready event and the interrupt flag are set after each conversion. It is possible to combine accumulated conversion and Free-Running mode.

To safely change any of these settings when using Free-Running mode, disable Free-Running mode, and wait for the conversion to complete before doing any changes. Enable Free-Running mode again before starting the next conversion.

31.3.3.4.4 Adjusting Conversion Time

Both sampling time and sampling length can be adjusted using the Sampling Delay Selection (SAMPDLY) bit field in the Control D (ADCn.CTRLD) register and Sample Length (SAMPLEN) bit field in the Sample Control (ADCn.SAMPCTRL) register. Both of these control the ADC sampling time and sampling length in a number of CLK_ADC cycles. Increasing SAMPLEN allows sampling high-impedance sources without reducing CLK_ADC frequency. Adjusting SAMPDLY is intended for tuning the sampling frequency away from harmonic noise in the analog signal. Total sampling time is given by:

$$\text{SampleTime} = \frac{(2 + \text{SAMPDLY} + \text{SAMPLEN})}{f_{\text{CLK_ADC}}}$$

The equation above implies that the total conversion time for n samples is now:

$$\text{Total Conversion Time (12-bit)} = \frac{2}{f_{\text{CLK_PER}}} + n\left(\frac{13.5 + 2 + SAMPDLY + SAMPLEN}{f_{\text{CLK_ADC}}} + \frac{2}{f_{\text{CLK_PER}}}\right)$$

Some of the analog resources used by the ADC require time to initialize before a conversion can start. The Initialization Delay (INITDLY) bit field in the Control D (ADCn.CTRLD) register can be used to prevent starting a conversion prematurely by halting sampling for the configured delay duration.

The figure below shows the timing diagram for the ADC and the usage of the INITDLY, SAMPDLY and SAMPLEN bit fields:

Figure 31-7. Timing Diagram - Conversion with Delays and Custom Sampling Length

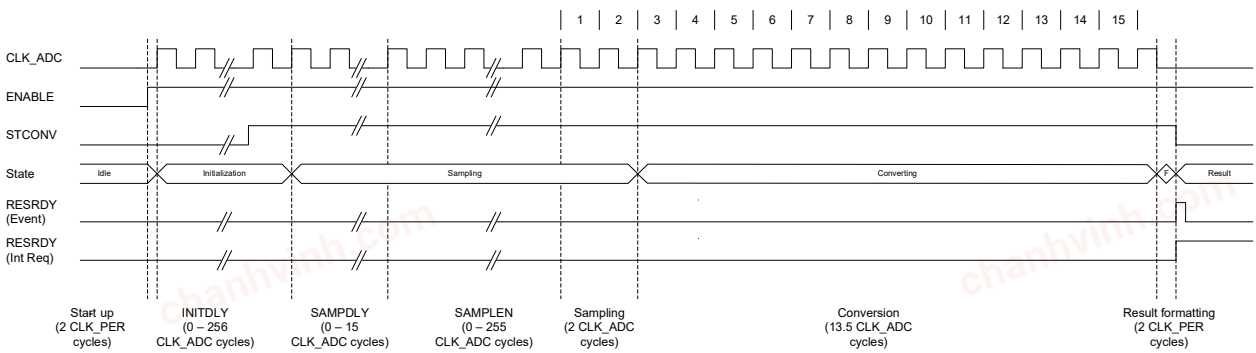

31.3.3.5 Conversion Result (Output Formats)

The result of an analog-to-digital conversion is written to the 16-bit Result (ADCn.RES) register and is given by the following equations:

Single-ended 12-bit conversion: $RES = \frac{V_{\text{AINP}}}{V_{\text{ADCREF}}} \times 4096 \in [0, 4095]$

chanhvinh.com

Single-ended 10-bit conversion: $RES = \frac{V_{AINP}}{V_{ADCREF}} \times 1024 \in [0, 1023]$

Differential 12-bit conversion: $RES = \frac{V_{AINP} - V_{AINN}}{V_{ADCREF}} \times 2048 \in [-2048, 2047]$

Differential 10-bit conversion: $RES = \frac{V_{AINP} - V_{AINN}}{V_{ADCREF}} \times 512 \in [-512, 511]$

where V_{AINP} and V_{AINN} are the positive and negative ADC inputs and V_{ADCREF} is the selected ADC voltage reference.

The data format used for single-ended conversions is unsigned one's complement, while two's complement with sign extension is used for differential conversions. Consequently, for differential conversions the sign bit is padded to the higher bits in the Result register, if needed.

By default, conversion results are stored in the Result register as right-adjusted 16-bit values. The eight Least Significant bits (LSbs) are then located in the low byte of the Result register. By writing a '1' to the Left Adjust Result (LEFTADJ) bit in the Control A (ADCn.CTRLA) register, the values will be left-adjusted by placing the eight Most Significant bits (MSbs) in the high byte of the Result register.

The two figures below illustrate the relationship between the analog input and the corresponding ADC output.

Figure 31-8. Unsigned Single-Ended, Input Range, and Result Representation

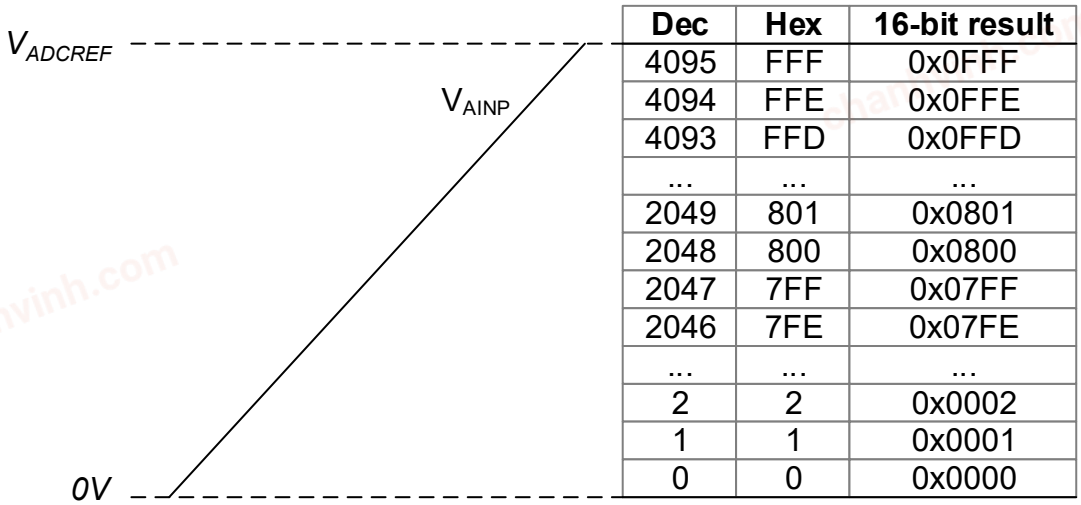

Dec	Hex	16-bit result
4095	FFF	0x0FFF
4094	FFE	0x0FFE
4093	FFD	0x0FFD
...	...	...
2049	801	0x0801
2048	800	0x0800
2047	7FF	0x07FF
2046	7FE	0x07FE
...	...	...
2	2	0x0002
1	1	0x0001
0	0	0x0000

Where V_{AINP} is the single-ended or internal input.

chanhvinh.com

Figure 31-9. Signed Differential Input, Input Range, and Result Representation

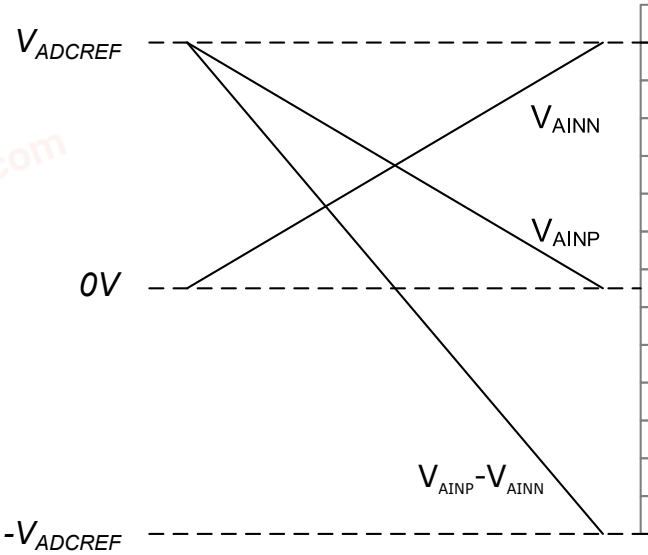

Dec	Hex	16-bit result
2047	7FF	0x07FF
2046	7FE	0x07FE
2045	7FD	0x07FD
...	...	...
2	2	0x0002
1	1	0x0001
0	0	0x0000
-1	FFF	0xFFFF
-2	FFE	0xFFFE
...	...	...
-2046	802	0xF802
-2047	801	0xF801
-2048	800	0xF800

If a single-ended analog input is above the ADC voltage reference level, the 12-bit ADC result will be `0xFFF` (decimal 4095). Likewise, if the input is below 0V, the ADC result will be `0x000`.

If the voltage difference between V_{AINP} and V_{AINN} for a 12-bit differential conversion is above the ADC voltage reference level, the ADC result will be `0x7FF` (decimal 2047). If the voltage difference is larger than the voltage reference level in the negative direction, the ADC result will be `0x800` (decimal -2048).

31.3.3.6 Accumulation

By default, conversion results are stored in the Result register as right-adjusted 16-bit values. The eight Least Significant bits (LSbs) are then located in the low byte of the Result register. By writing a '`1`' to the Left Adjust Result (LEFTADJ) bit in the Control A (ADCn.CTRLA) register, the values will be left-adjusted by placing the eight Most Significant bits (MSbs) in the high byte of the Result register.

The result from multiple consecutive conversions can be accumulated. The number of samples to be accumulated is specified by the Sample Accumulation Number Select (SAMPNUM) bit field in the Control B (ADCn.CTRLB) register. When accumulating more than 16 samples, the result might be too large to match the 16-bit Result register size. To avoid overflow, the LSbs of the result are truncated to fit within the available register size.

The two following tables show how the Result (ADCn.RES) register value is stored for single-ended and differential conversions.

Table 31-1. Result Format in Single-Ended Mode

Accumulations	LEFTADJ	RES[15:8]									RES[7:0]						
		Bit 15	Bit 14	Bit 13	Bit 12	Bit 11	Bit 10	Bit 9	Bit 8	Bit 7	Bit 6	Bit 5	Bit 4	Bit 3	Bit 2	Bit 1	Bit 0
1	0	0	0	0	0	Conversion [11:0]											
	1	Conversion [11:0]												0	0	0	0
2	0	0	0	0	Accumulation [12:0]												
	1	Accumulation [12:0]													0	0	0
4	0	0	0	Accumulation [13:0]													
	1	Accumulation [13:0]														0	0
8	0	0	Accumulation [14:0]														
	1	Accumulation [14:0]															0

chanhvinh.com

.....continued

Accumulations	LEFTADJ	RES[15:8]									RES[7:0]						
		Bit 15	Bit 14	Bit 13	Bit 12	Bit 11	Bit 10	Bit 9	Bit 8	Bit 7	Bit 6	Bit 5	Bit 4	Bit 3	Bit 2	Bit 1	Bit 0
16	0	Accumulation [15:0]															
	1																
32, 64, 128	0	Truncated Accumulation [15:0]															
	1																

Table 31-2. Result Format in Differential Mode

Accumulations	LEFTADJ	RES[15:8]									RES[7:0]						
		Bit 15	Bit 14	Bit 13	Bit 12	Bit 11	Bit 10	Bit 9	Bit 8	Bit 7	Bit 6	Bit 5	Bit 4	Bit 3	Bit 2	Bit 1	Bit 0
1	0	Sign extension				Signed conversion [11:0]											
	1	Signed conversion [11:0]												0	0	0	0
2	0	Sign extension			Signed accumulation [12:0]												
	1	Signed accumulation [12:0]													0	0	0
4	0	Sign extension			Signed accumulation [13:0]												
	1	Signed accumulation [13:0]														0	0
8	0	Sign extension		Signed accumulation [14:0]													
	1	Signed accumulation [14:0]															0
16	0	Signed accumulation [15:0]															
	1																
32, 64, 128	0	Signed truncated accumulation [15:0]															
	1																

31.3.3.7 Channel Selection

The input selection for the ADC is controlled by the MUXPOS and MUXNEG bit fields in the ADCn.MUXPOS and ADCn.MUXNEG registers, respectively. If the ADC is running single-ended conversions, only MUXPOS is used, while both are used in differential conversions.

The MUXPOS bit field of the ADCn.MUXPOS register and the MUXNEG bit field of the ADCn.MUXNEG register are buffered through a temporary register. This ensures that the input selection only comes into effect at a safe point during the conversion. The channel selections are continuously updated until a conversion is started.

Once the conversion starts, the channel selections are locked to ensure sufficient sampling time for the ADC. The continuous updating of input channel selection resumes in the last CLK_ADC clock cycle before the conversion completes. The next conversion starts on the following rising CLK_ADC clock edge after the STCONV bit is written to '1'.

31.3.3.8 Temperature Measurement

An on-chip temperature sensor is available. Follow the steps below to do a temperature measurement. The resulting value will be right-adjusted.

1. In the Voltage Reference (VREF) peripheral, select the internal 2.048V reference as the ADC reference voltage.
2. Select the temperature sensor as input in the ADCn.MUXPOS register.

chanhvinh.com

3. Configure the Initialization Delay by writing a configuration ≥ 25 × f_{CLK_ADC} µs to the Initialization Delay (INITDLY) bit field in the Control D (ADCn.CTRLD) register
4. Configure the ADC Sample Length by writing a configuration ≥ 28 µs × f_{CLK_ADC} to the Sample Length (SAMPLEN) bit field in the SAMPCTRL (ADCn.SAMPCTRL) register.
5. Acquire the temperature sensor output voltage by running a 12-bit, right-adjusted, single-ended conversion.
6. Process the measurement result as described below.

The measured voltage has an almost linear relationship with the temperature. Due to process variations, the temperature sensor output voltage varies between individual devices at the same temperature. The individual compensation factors determined during production test are stored in the Signature Row. These compensations factors are generated for the internal 2.048V reference.

- SIGROW.TEMPSENSE0 contains the slope of the temperature sensor characteristics
- SIGROW.TEMPSENSE1 contains the offset of the temperature sensor characteristics

In order to achieve more accurate results, the result of the temperature sensor measurement must be processed in the application software using compensation values from device production or user calibration. The temperature (in Kelvin) is calculated by the following equation:

$$T = \frac{(\text{Offset} - \text{ADC Result}) \times \text{Slope}}{4096}$$

It is recommended to follow these steps in the application code when using the compensation values from the Signature Row:

```
uint16_t sigrow_offset = SIGROW.TEMPSENSE1; // Read unsigned value from signature row
uint16_t sigrow_slope = SIGROW.TEMPSENSE0;  // Read unsigned value from signature row
uint16_t adc_reading = ADCn.RES;            // ADC conversion result

uint32_t temp = sigrow_offset - adc_reading;
temp *= sigrow_slope;   // Result will overflow 16-bit variable
temp += 0x0800;         // Add 4096/2 to get correct rounding on division below
temp >>= 12;            // Round off to nearest degree in Kelvin, by dividing with 2^12 (4096)
uint16_t temperature_in_K = temp;
```

To increase the precision of the measurement to less than 1 Kelvin it is possible to adjust the last two steps to round off to a fraction of one degree. Add 4096/4 and right shift by 11 for a precision of ½ Kelvin, or add 4096/8 and right shift by 10 for a ¼ Kelvin precision.

If accumulation is used to reduce noise in the temperature measurement, the ADC result needs to be adjusted to a 12-bit value before the calculation is performed.

If another reference (V_{ADCREF}) than 2.048V is required, the offset and slope values need to be adjusted according to the following equations:

$$\text{Slope} = \text{TEMPSENSE0} \times \frac{V_{ADCREF}}{2.048\text{V}}$$

$$\text{Offset} = \text{TEMPSENSE1} \times \frac{2.048\text{V}}{V_{ADCREF}}$$

31.3.3.9 Window Comparator

The ADC can raise the Window Comparator Interrupt (WCMP) flag in the Interrupt Flags (ADCn.INTFLAGS) register and request an interrupt (WCMP) when the output of a conversion or accumulation is above and/or below certain thresholds. The available modes are:

- The result is below a threshold
- The result is above a threshold
- The result is inside a window (above the lower threshold and below the upper threshold)
- The result is outside a window (either under the lower threshold or above the upper threshold)

The thresholds are defined by writing to the Window Comparator Low and High Threshold (ADCn.WINLT and ADCn.WINHT) registers. Writing to the Window Comparator Mode (WINCM) bit field in the Control E (ADCn.CTRLE) register selects the Window mode to use.

© 2021 Microchip Technology Inc.
and its subsidiaries

chanhvinh.com

When accumulating multiple samples, the comparison between the result and the threshold will happen after the last sample was acquired. Consequently, the flag is raised only once, after taking the last sample of the accumulation.

Assuming the ADC is already configured to run, follow these steps to use the Window Comparator:

1. Set the required threshold(s) by writing to the Window Comparator Low and High Threshold (ADCn.WINLT and ADCn.WINHT) registers.
2. Optional: Enable the interrupt request by writing a '1' to the Window Comparator Interrupt Enable (WCMP) bit in the Interrupt Control (ADCn.INTCTRL) register.
3. Enable the Window Comparator and select a mode by writing a valid non-zero value to the Window Comparator Mode (WINCM) bit field in the Control E (ADCn.CTRLE) register.

When accumulating samples, the window comparator thresholds are applied to the accumulated value and not to each sample. Using left adjustment of the result will make the comparator values independent of number of samples.

31.3.4 I/O Lines and Connections

The analog input pins and the VREF pin (AINx and VREFA) are configured in the I/O Pin Controller (PORT).

To reduce power consumption, the digital input buffer has to be disabled on the pins used as inputs for ADC. This is configured by the I/O Pin Controller (PORT).

31.3.5 Events

The ADC can generate the following events:

Table 31-3. Event Generators in ADC

Generator Name		Description	Event Type	Generating Clock Domain	Length of Event
Peripheral	Event				
ADCn	RESRDY	Result ready	Pulse	CLK_PER	One clock period

The conditions for generating an event are identical to those that will raise the corresponding flag in the Interrupt Flags (ADCn.INTFLAGS) register.

The ADC has one event user for detecting and acting upon input events. The table below describes the event user and the associated functionality.

Table 31-4. Event Users and Available Event Actions in ADC

User Name		Description	Input Detection	Async/Sync
Peripheral	Input			
ADCn	START	ADC start conversion	Edge	Async

The ADC can be configured to start a conversion on the rising edge of an event signal by writing a '1' to the STARTEI bit field in the Event Control (ADCn.EVCTRL) register. Refer to the *Event System (EVSYS)* section for more details regarding event types and Event System configuration.

When an input event trigger occurs, the positive edge will be detected, the Start Conversion (STCONV) bit in the Command (ADCn.COMMAND) register will be set, and the conversion will start. When the conversion is completed, the Result Ready (RESRDY) flag in the Interrupt Flags (ADCn.INTFLAGS) register is set and the STCONV bit in ADCn.COMMAND is cleared.

31.3.6 Interrupts

Table 31-5. Available Interrupt Vectors and Sources

Name	Vector Description	Conditions
RESRDY	Result Ready interrupt	The conversion result is available in ADCn.RES.
WCMP	Window Comparator interrupt	As defined by WINCM in ADCn.CTRLE.

chanhvinh.com

When an interrupt condition occurs, the corresponding interrupt flag is set in the Interrupt Flags (ADCn.INTFLAGS) register.

An interrupt source is enabled or disabled by writing to the corresponding enable bit in the Interrupt Control (ADCn.INTCTRL) register.

An interrupt request is generated when the corresponding interrupt source is enabled and the interrupt flag is set. The interrupt request remains active until the interrupt flag is cleared. Refer to the ADCn.INTFLAGS register for details on how to clear interrupt flags.

31.3.7 Debug Operation

By default, halting the CPU in Debugging Mode will halt the normal operation of the peripheral.

This peripheral can be forced to operate while the CPU is halted by writing a '1' to the Debug Run (DBGRUN) bit in the Debug Control (ADCn.DBGCTRL) register.

31.3.8 Sleep Mode Operation

By default, the ADC is disabled in Standby sleep mode.

The ADC can stay fully operational in Standby sleep mode if the Run in Standby (RUNSTDBY) bit in the Control A (ADCn.CTRLA) register is written to '1'.

In this case, the ADC will stay active, any ongoing conversions will be completed, and interrupts will be executed as configured.

In Standby sleep mode, an ADC conversion can be triggered only via the Event System (EVSYS), or the ADC must be in Free-Running mode with the first conversion triggered by software before entering sleep. The peripheral clock is requested if needed and is turned off after the conversion is completed.

The reference source and supply infrastructure need time to stabilize when activated in Standby sleep mode. Configure a delay for the start of the first conversion by writing a non-zero value to the Initialization Delay (INITDLY) bit field in the Control D (ADCn.CTRLD) register.

In Power-Down sleep mode, no conversions are possible. Any ongoing conversions are halted and will be resumed when going out of sleep. At the end of the conversion, the Result Ready (RESRDY) flag will be set, but the content of the Result (ADCn.RES) registers will be invalid since the ADC was halted during a conversion. It is recommended to make sure conversions have completed before entering Power-Down sleep mode.

When going out of the Power-Down sleep mode or Standby sleep mode (when RUNSTDBY bit is cleared), the warm up time t_{warm_up} is needed. This delay can be implemented manually in code or by configuring the Initialization Delay (INITDLY) bit field in the Control D (ADCn.CTRLD) register to a value ≥ t_{warm_up} x f_{CLK_ADC}. Refer to the *Electrical Characteristics* section for further information.

31.3.9 Synchronization

Not applicable.

31.3.10 Configuration Change Protection

Not applicable.

© 2021 Microchip Technology Inc.
and its subsidiaries

chanhvinh.com

31.4 Register Summary

Offset	Name	Bit Pos.	7	6	5	4	3	2	1	0
0x00	CTRLA	7:0	RUNSTDBY		CONVMODE	LEFTADJ	RESSEL[1:0]		FREERUN	ENABLE
0x01	CTRLB	7:0						SAMPNUM[2:0]		
0x02	CTRLC	7:0					PRESC[3:0]			
0x03	CTRLD	7:0		INITDLY[2:0]			SAMPDLY[3:0]			
0x04	CTRLE	7:0						WINCM[2:0]		
0x05	SAMPCTRL	7:0	SAMPLEN[7:0]							
0x06 ... 0x07	Reserved									
0x08	MUXPOS	7:0		MUXPOS[6:0]						
0x09	MUXNEG	7:0		MUXNEG[6:0]						
0x0A	COMMAND	7:0							SPCONV	STCONV
0x0B	EVCTRL	7:0								STARTEI
0x0C	INTCTRL	7:0							WCMP	RESRDY
0x0D	INTFLAGS	7:0							WCMP	RESRDY
0x0E	DBGCTRL	7:0								DBGRUN
0x0F	TEMP	7:0	TEMP[7:0]							
0x10	RES	7:0	RES[7:0]							
		15:8	RES[15:8]							
0x12	WINLT	7:0	WINLT[7:0]							
		15:8	WINLT[15:8]							
0x14	WINHT	7:0	WINHT[7:0]							
		15:8	WINHT[15:8]							

31.5 Register Description

chanhvinh.com

chanhvinh.com

31.5.1 Control A

Name: CTRLA
Offset: 0x00
Reset: 0x00
Property: -

Bit	7	6	5	4	3	2	1	0
	RUNSTDBY		CONVMODE	LEFTADJ	RESSEL[1:0]		FREERUN	ENABLE
Access	R/W		R/W	R/W	R/W	R/W	R/W	R/W
Reset	0		0	0	0	0	0	0

Bit 7 – RUNSTDBY Run in Standby
This bit determines whether the ADC still runs during Standby.

Value	Description
0	ADC will not run in Standby sleep mode. An ongoing conversion will finish before the ADC enters sleep mode
1	ADC will run in Standby sleep mode

Bit 5 – CONVMODE Conversion Mode
This bit defines if the ADC is working in Single-Ended or Differential mode.

Value	Name	Description
0x0	SINGLEENDED	The ADC is operating in Single-Ended mode where only the positive input is used. The ADC result is presented as an unsigned value.
0x1	DIFF	The ADC is operating in Differential mode where both positive and negative inputs are used. The ADC result is presented as a signed value.

Bit 4 – LEFTADJ Left Adjust Result
Writing a '1' to this bit will enable left adjustment of the ADC result.

Bits 3:2 – RESSEL[1:0] Resolution Selection
This bit field selects the ADC resolution. When changing the resolution from 12-bit to 10-bit, the conversion time is reduced from 13.5 CLK_ADC cycles to 11.5 CLK_ADC cycles.

Value	Description
0x00	12-bit resolution
0x01	10-bit resolution
Other	Reserved

Bit 1 – FREERUN Free-Running
Writing a '1' to this bit will enable the Free-Running mode for the ADC. The first conversion is started by writing a '1' to the Start Conversion (STCONV) bit in the Command (ADCn.COMMAND) register.

Bit 0 – ENABLE ADC Enable

Value	Description
0	ADC is disabled
1	ADC is enabled

© 2021 Microchip Technology Inc. and its subsidiaries

chanhvinh.com

31.5.2 Control B

Name: CTRLB
Offset: 0x01
Reset: 0x00
Property: -

Bit	7	6	5	4	3	2	1	0
						SAMPNUM[2:0]		
Access						R/W	R/W	R/W
Reset						0	0	0

Bits 2:0 – SAMPNUM[2:0] Sample Accumulation Number Select
This bit field selects how many consecutive ADC sampling results are accumulated automatically. When this bit field is written to a value greater than 0x0, the according number of consecutive ADC sampling results are accumulated into the ADC Result (ADCn.RES) register.

Value	Name	Description
0x0	NONE	No accumulation
0x1	ACC2	2 results accumulated
0x2	ACC4	4 results accumulated
0x3	ACC8	8 results accumulated
0x4	ACC16	16 results accumulated
0x5	ACC32	32 results accumulated
0x6	ACC64	64 results accumulated
0x7	ACC128	128 results accumulated

chanhvinh.com

chanhvinh.com

31.5.3 Control C

Name: CTRLC
Offset: 0x02
Reset: 0x00
Property: -

Bit	7	6	5	4	3	2	1	0
					PRESC[3:0]			
Access					R/W	R/W	R/W	R/W
Reset					0	0	0	0

Bits 3:0 – PRESC[3:0] Prescaler
This bit field defines the division factor from the peripheral clock (CLK_PER) to the ADC clock (CLK_ADC).

Value	Name	Description
0x0	DIV2	CLK_PER divided by 2
0x1	DIV4	CLK_PER divided by 4
0x2	DIV8	CLK_PER divided by 8
0x3	DIV12	CLK_PER divided by 12
0x4	DIV16	CLK_PER divided by 16
0x5	DIV20	CLK_PER divided by 20
0x6	DIV24	CLK_PER divided by 24
0x7	DIV28	CLK_PER divided by 28
0x8	DIV32	CLK_PER divided by 32
0x9	DIV48	CLK_PER divided by 48
0xA	DIV64	CLK_PER divided by 64
0xB	DIV96	CLK_PER divided by 96
0xC	DIV128	CLK_PER divided by 128
0xD	DIV256	CLK_PER divided by 256
Other	-	Reserved

© 2021 Microchip Technology Inc.
and its subsidiaries

chanhvinh.com

31.5.4 Control D

Name: CTRLD
Offset: 0x03
Reset: 0x00
Property: -

Bit	7	6	5	4	3	2	1	0
	INITDLY[2:0]				SAMPDLY[3:0]			
Access	R/W	R/W	R/W		R/W	R/W	R/W	R/W
Reset	0	0	0		0	0	0	0

Bits 7:5 – INITDLY[2:0] Initialization Delay
This bit field defines the initialization delay before the first sample when enabling the ADC or changing to an internal reference voltage. Setting this delay will ensure that the components of ADC are ready before starting the first conversion. The initialization delay will also be applied when waking up from deep Sleep to do a measurement. The delay is expressed as a number of CLK_ADC cycles.

Value	Name	Description
0x0	DLY0	Delay 0 CLK_ADC cycles
0x1	DLY16	Delay 16 CLK_ADC cycles
0x2	DLY32	Delay 32 CLK_ADC cycles
0x3	DLY64	Delay 64 CLK_ADC cycles
0x4	DLY128	Delay 128 CLK_ADC cycles
0x5	DLY256	Delay 256 CLK_ADC cycles
Other	-	Reserved

Bits 3:0 – SAMPDLY[3:0] Sampling Delay
This bit field defines the delay between consecutive ADC samples. This allows modifying the sampling frequency used during hardware accumulation, to suppress periodic noise that may otherwise disturb the sampling. The delay is expressed as CLK_ADC cycles and is given directly by the bit field setting.

Value	Name	Description
0x0	DLY0	Delay 0 CLK_ADC cycles
0x1	DLY1	Delay 1 CLK_ADC cycles
0x2	DLY2	Delay 2 CLK_ADC cycles
...	...	
0xF	DLY15	Delay 15 CLK_ADC cycles

© 2021 Microchip Technology Inc. and its subsidiaries

chanhvinh.com

31.5.5 Control E

Name: CTRLE
Offset: 0x04
Reset: 0x00
Property: -

Bit	7	6	5	4	3	2	1	0
						WINCM[2:0]		
Access						R/W	R/W	R/W
Reset						0	0	0

Bits 2:0 – WINCM[2:0] Window Comparator Mode
This bit field enables the Window Comparator and defines when the Window Comparator Interrupt Flag (WCMP) in the Interrupt Flags (ADCn.INTFLAGS) register is set. In the table below, RESULT is the accumulated 16-bit result. WINLT and WINHT are the 16-bit lower threshold value and the 16-bit upper threshold value given by the ADCn.WINLT and ADCn.WINHT registers, respectively.

Value	Name	Description
0x0	NONE	No Window Comparison (default)
0x1	BELOW	*RESULT < WINLT*
0x2	ABOVE	*RESULT > WINHT*
0x3	INSIDE	*WINLT ≤ RESULT ≤ WINHT*
0x4	OUTSIDE	*RESULT < WINLT or RESULT >WINHT*
Other	-	Reserved

© 2021 Microchip Technology Inc.
and its subsidiaries

chanhvinh.com

31.5.6 Sample Control

Name: SAMPCTRL
Offset: 0x05
Reset: 0x00
Property: -

Bit	7	6	5	4	3	2	1	0
	SAMPLEN[7:0]							
Access	R/W	R/W	R/W	R/W	R/W	R/W	R/W	R/W
Reset	0	0	0	0	0	0	0	0

Bits 7:0 – SAMPLEN[7:0] Sample Length
This bit field extends the ADC sampling time with the number of CLK_ADC cycles given by the bit field value. Increasing the sampling time allows sampling sources with higher impedance. By default, the sampling time is two CLK_ADC cycles. The total conversion time increases with the selected sampling length.

chanhvinh.com

chanhvinh.com

31.5.7 MUX Selection for Positive ADC Input

Name: MUXPOS
Offset: 0x08
Reset: 0x00
Property: -

Bit	7	6	5	4	3	2	1	0
		MUXPOS[6:0]						
Access		R/W	R/W	R/W	R/W	R/W	R/W	R/W
Reset		0	0	0	0	0	0	0

Bits 6:0 – MUXPOS[6:0] MUX Selection for Positive ADC Input
This bit field selects which analog input is connected to the positive input of the ADC. If this bit field is changed during a conversion, the change will not take effect until the conversion is complete.

Value	Name	Description
0x00-0x0F	AIN0-AIN15	ADC input pin 0-15
0x10-0x15	AIN16-AIN21	ADC input pin 16-21
0x16-0x3F	-	Reserved
0x40	GND	Ground
0x41	-	Reserved
0x42	TEMPSENSE	Temperature sensor
0x43-0x47	-	Reserved
0x48	DAC0	DAC0
0x49	DACREF0	DACREF0
0x4A	DACREF1	DACREF1
0x4B	DACREF2	DACREF2
Other	-	Reserved

© 2021 Microchip Technology Inc.
and its subsidiaries

chanhvinh.com

31.5.8 MUX Selection for Negative ADC Input

Name: MUXNEG
Offset: 0x09
Reset: 0x00
Property: -

Bit	7	6	5	4	3	2	1	0
		MUXNEG[6:0]						
Access		R/W	R/W	R/W	R/W	R/W	R/W	R/W
Reset		0	0	0	0	0	0	0

Bits 6:0 – MUXNEG[6:0] MUX Selection for Negative ADC Input
This bit field selects which analog input is connected to the negative input of the ADC. If this bit field is changed during a conversion, the change will not take effect until the conversion is complete.

Value	Name	Description
0x00-0x0F	AIN0-AIN15	ADC input pin 0-15
0x10-0x3F	-	Reserved
0x40	GND	Ground
0x42-0x47	-	Reserved
0x48	DAC0	DAC0
Other	-	Reserved

© 2021 Microchip Technology Inc.
and its subsidiaries

chanhvinh.com

31.5.9 Command

Name: COMMAND
Offset: 0x0A
Reset: 0x00
Property: -

Bit	7	6	5	4	3	2	1	0
							SPCONV	STCONV
Access							R/W	R/W
Reset							0	0

Bit 1 – SPCONV Stop Conversion
Writing a '1' to this bit will end the current measurement. This bit will take precedence over the Start Conversion (STCONV) bit. Writing a '0' to this bit has no effect.

Bit 0 – STCONV Start Conversion
Writing a '1' to this bit will start a conversion as soon as any ongoing conversions are completed. If in Free-Running mode, this will start the first conversion. STCONV will read as '1' as long as a conversion is in progress. When the conversion is complete, this bit is automatically cleared. Writing a '0' to this bit has no effect.

chanhvinh.com

chanhvinh.com

31.5.10 Event Control

Name: EVCTRL
Offset: 0x0B
Reset: 0x00
Property: -

Bit	7	6	5	4	3	2	1	0
								STARTEI
Access								R/W
Reset								0

Bit 0 – STARTEI Start Event Input
This bit enables the event input as trigger for starting a conversion. When a '1' is written to this bit, a rising event edge will trigger an ADC conversion.

chanhvinh.com

chanhvinh.com

31.5.11 Interrupt Control

Name: INTCTRL
Offset: 0x0C
Reset: 0x00
Property: -

Bit	7	6	5	4	3	2	1	0
							WCMP	RESRDY
Access							R/W	R/W
Reset							0	0

Bit 1 – WCMP Window Comparator Interrupt Enable
Writing a '1' to this bit enables the window comparator interrupt.

Bit 0 – RESRDY Result Ready Interrupt Enable
Writing a '1' to this bit enables the Result Ready interrupt.

chanhvinh.com

31.5.12 Interrupt Flags

Name: INTFLAGS
Offset: 0x0D
Reset: 0x00
Property: -

Bit	7	6	5	4	3	2	1	0
							WCMP	RESRDY
Access							R/W	R/W
Reset							0	0

Bit 1 – WCMP Window Comparator Interrupt Flag
This window comparator flag is set when the measurement is complete and if the result matches the selected Window Comparator mode defined by the WINCM bit field in the Control E (ADCn.CTRLE) register. The comparison is done at the end of the conversion. The flag is cleared by either writing a '1' to the bit position or by reading the Result (ADCn.RES) register. Writing a '0' to this bit has no effect.

Bit 0 – RESRDY Result Ready Interrupt Flag
The Result Ready interrupt flag is set when a measurement is complete and a new result is ready. The flag is cleared by either writing a '1' to the bit location or by reading the Result (ADCn.RES) register. Writing a '0' to this bit has no effect.

© 2021 Microchip Technology Inc.
and its subsidiaries

chanhvinh.com

31.5.13 Debug Control

Name: DBGCTRL
Offset: 0x0E
Reset: 0x00
Property: -

Bit	7	6	5	4	3	2	1	0
								DBGRUN
Access								R/W
Reset								0

Bit 0 – DBGRUN Run in Debug Mode
When written to '1', the peripheral will continue operating in Debug mode when the CPU is halted.

chanhvinh.com

31.5.14 Temporary

Name: TEMP
Offset: 0x0F
Reset: 0x00
Property: -

The Temporary register is used by the CPU for 16-bit single-cycle access to the 16-bit registers of this peripheral. The register is common for all the 16-bit registers of this peripheral and can be read and written by software. For more details on reading and writing 16-bit registers, refer to *Accessing 16-Bit Registers* in the *Memories* section.

Bit	7	6	5	4	3	2	1	0
	TEMP[7:0]							
Access	R/W	R/W	R/W	R/W	R/W	R/W	R/W	R/W
Reset	0	0	0	0	0	0	0	0

Bits 7:0 – TEMP[7:0] Temporary
Temporary register for read and write operations to and from 16-bit registers.

chanhvinh.com

31.5.15 Result

Name: RES
Offset: 0x10
Reset: 0x00
Property: -

The ADCn.RESL and ADCn.RESH register pair represents the 16-bit value, ADCn.RES. The low byte [7:0] (suffix L) is accessible at the original offset. The high byte [15:8] (suffix H) can be accessed at offset + `0x01`.

Refer to the 31.3.3.5 Conversion Result (Output Formats) section for details on the output from this register.

Bit	15	14	13	12	11	10	9	8
	RES[15:8]							
Access	R	R	R	R	R	R	R	R
Reset	0	0	0	0	0	0	0	0

Bit	7	6	5	4	3	2	1	0
	RES[7:0]							
Access	R	R	R	R	R	R	R	R
Reset	0	0	0	0	0	0	0	0

Bits 15:8 – RES[15:8] Result High Byte
This bit field constitutes the high byte of the ADCn.RES register, where the MSb is RES[15].

Bits 7:0 – RES[7:0] Result Low Byte
This bit field constitutes the low byte of the ADCn.RES register.

chanhvinh.com

31.5.16 Window Comparator Low Threshold

Name: WINLT
Offset: 0x12
Reset: 0x00
Property: -

This register is the 16-bit low threshold for the digital comparator monitoring the Result (ADCn.RES) register. The data format must be according to the Conversion mode and left/right adjustment setting.

The ADCn.WINLTH and ADCn.WINLTL register pair represents the 16-bit value, ADCn.WINLT. The low byte [7:0] (suffix L) is accessible at the original offset. The high byte [15:8] (suffix H) can be accessed at offset + `0x01`.

Bit	15	14	13	12	11	10	9	8
	WINLT[15:8]							
Access	R/W	R/W	R/W	R/W	R/W	R/W	R/W	R/W
Reset	0	0	0	0	0	0	0	0

Bit	7	6	5	4	3	2	1	0
	WINLT[7:0]							
Access	R/W	R/W	R/W	R/W	R/W	R/W	R/W	R/W
Reset	0	0	0	0	0	0	0	0

Bits 15:8 – WINLT[15:8] Window Comparator Low Threshold High Byte
This bit field holds the MSB of the 16-bit register.

Bits 7:0 – WINLT[7:0] Window Comparator Low Threshold Low Byte
This bit field holds the LSB of the 16-bit register.

chanhvinh.com

chanhvinh.com

31.5.17 Window Comparator High Threshold

Name: WINHT
Offset: 0x14
Reset: 0x00
Property: -

This register is the 16-bit high threshold for the digital comparator monitoring the Result (ADCn.RES) register. The data format must be according to the Conversion mode and left/right adjustment setting.

The ADCn.WINHTH and ADCn.WINHTL register pair represents the 16-bit value, ADCn.WINHT. The low byte [7:0] (suffix L) is accessible at the original offset. The high byte [15:8] (suffix H) can be accessed at offset + `0x01`.

Bit	15	14	13	12	11	10	9	8
	WINHT[15:8]							
Access	R/W	R/W	R/W	R/W	R/W	R/W	R/W	R/W
Reset	0	0	0	0	0	0	0	0

Bit	7	6	5	4	3	2	1	0
	WINHT[7:0]							
Access	R/W	R/W	R/W	R/W	R/W	R/W	R/W	R/W
Reset	0	0	0	0	0	0	0	0

Bits 15:8 – WINHT[15:8] Window Comparator High Threshold High Byte
This bit field holds the MSB of the 16-bit register.

Bits 7:0 – WINHT[7:0] Window Comparator High Threshold Low Byte
This bit field holds the LSB of the 16-bit register.

chanhvinh.com

chanhvinh.com

32. DAC - Digital-to-Analog Converter

32.1 Features

- 10-Bit Resolution
- High Drive Capabilities
- The DAC Output Can Be Used as Input to the ADC Positive Input

32.2 Overview

The Digital-to-Analog Converter (DAC) converts a digital value written to the Data (DACn.DATA) register to an analog voltage. The conversion range is between GND and the selected voltage reference in the Voltage Reference (VREF) peripheral. The DAC has one continuous time output with high drive capabilities. The DAC conversion can be started from the application by writing to the Data (DACn.DATA) register.

32.2.1 Block Diagram

Figure 32-1. DAC Block Diagram

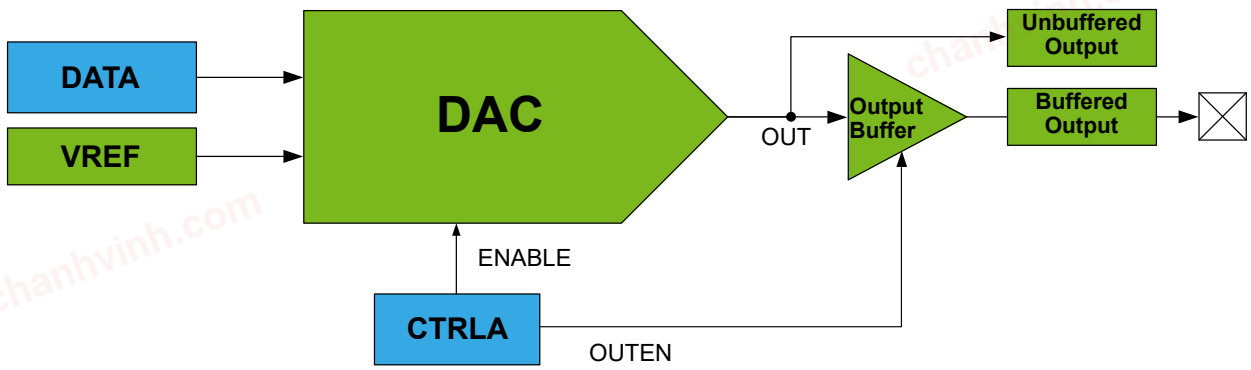

32.2.2 Signal Description

Signal	Description	Type
OUT	DAC output	Analog

32.3 Functional Description

32.3.1 Initialization

To operate the DAC, the following steps are required:

1. Select the DAC reference voltage in the Voltage Reference (VREF) peripheral by writing the appropriate Reference Selection bits.
2. Configure the further usage of the DAC output:
   - Configure an internal peripheral to use the DAC output. Refer to the documentation of the respective peripherals.
   - Enable the output to a pin by writing a '1' to the Output Buffer Enable (OUTEN) bit. The input for the DAC pin must be disabled in the Port peripheral (ISC = INPUT_DISABLE in PORTx.PINCTRLn).
3. Write an initial digital value to the Data (DACn.DATA) register.
4. Enable the DAC by writing a '1' to the ENABLE bit in the Control A (DACn.CTRLA) register.

chanhvinh.com

32.3.2 Operation

32.3.2.1 Enabling, Disabling and Resetting

The DAC is enabled by writing a '1' to the ENABLE bit in the Control A (DACn.CTRLA) register, and disabled by writing a '0' to this bit.

32.3.2.2 Starting a Conversion

When the ENABLE bit in the Control A (DACn.CTRLA) register is written to '1', a conversion starts as soon as the Data (DACn.DATA) register is written.

When the ENABLE bit in DACn.CTRLA is written to '0', writing to the Data register does not trigger a conversion. Instead, the conversion starts when the ENABLE bit in DACn.CTRLA is written to '1'.

32.3.2.3 DAC Output

The DAC can be used as an output to a pin and as an input to the peripherals in the table below.

DAC Output	Peripheral Input	Notes
Unbuffered	Analog-to-Digital Converter (ADC)	The peripheral is connected to the unbuffered DAC output. See section 32.3.2.3.1 Unbuffered Output as Source For Internal Peripherals.
Buffered	—	The peripheral is connected to the DAC output pin. See section 32.3.2.3.2 Buffered Output.

32.3.2.3.1 Unbuffered Output as Source For Internal Peripherals

The unbuffered analog output of the DAC can be internally connected to other peripherals when the ENABLE bit in the Control A (DACn.CTRLA) register is written to '1'. When only the DAC unbuffered analog output is used, the Output Buffer Enable (OUTEN) bit in DACn.CTRLA can be '0', freeing the pin to be used by other peripherals.

32.3.2.3.2 Buffered Output

The buffered analog output of the DAC can be enabled by writing a '1' to the Output Buffer Enable (OUTEN) bit in the Control A (DACn.CTRLA) register. The pin used by the DAC must have the input disabled from the Port peripheral. Refer to the *Electrical Characteristics* section for information about the drive capabilities of the DAC output buffer.

32.3.3 Sleep Mode Operation

If the Run in Standby (RUNSTDBY) bit in the Control A (DACn.CTRLA) register is written to '1', the DAC will continue to operate in Standby sleep mode. If the RUNSTDBY bit is zero, the DAC will stop the conversion in Standby sleep mode.

If the conversion is stopped in Standby sleep mode, the DAC and the output buffer are disabled to reduce power consumption. When the device is exiting Standby sleep mode, the DAC and the output buffer (if the OUTEN bit in the Control A (DACn.CTRLA) register is written to '1') are enabled again. Therefore, a start-up time is required before a new conversion is initiated.

In Power-Down sleep mode, the DAC and the output buffer are disabled to reduce power consumption.

© 2021 Microchip Technology Inc. and its subsidiaries

chanhvinh.com

32.4 Register Summary

Offset	Name	Bit Pos.	7	6	5	4	3	2	1	0
0x00	CTRLA	7:0	RUNSTDBY	OUTEN						ENABLE
0x01	Reserved									
0x02	DATA	7:0	DATA[1:0]							
		15:8	DATA[9:2]							

32.5 Register Description

chanhvinh.com

32.5.1 Control A

Name: CTRLA
Offset: 0x00
Reset: 0x00
Property: -

Bit	7	6	5	4	3	2	1	0
	RUNSTDBY	OUTEN						ENABLE
Access	R/W	R/W						R/W
Reset	0	0						0

Bit 7 – RUNSTDBY Run in Standby Mode
If this bit is written to '1', the DAC or the output buffer will not automatically be disabled when the device is entering Standby sleep mode.

Bit 6 – OUTEN Output Buffer Enable
Writing a '1' to this bit enables the output buffer and sends the OUT signal to a pin.

Bit 0 – ENABLE DAC Enable
Writing a '1' to this bit enables the DAC.

chanhvinh.com

32.5.2 DATA

Name: DATA
Offset: 0x02
Reset: 0x00
Property: -

The DACn.DATAL and DACn.DATAH register pair represents the 10-bit value, DACn.DATA. The two LSbs [1:0] are accessible at the original offset. The eight MSbs [9:2] can be accessed at offset + `0x01`.

The output will be updated after DACn.DATAH is written.

Bit	15	14	13	12	11	10	9	8
	DATA[9:2]							
Access	R/W	R/W	R/W	R/W	R/W	R/W	R/W	R/W
Reset	0	0	0	0	0	0	0	0

Bit	7	6	5	4	3	2	1	0
	DATA[1:0]							
Access	R/W	R/W						
Reset	0	0						

Bits 15:6 – DATA[9:0]
These bits contain the digital data, which will be converted to an analog voltage.

chanhvinh.com

33. PTC - Peripheral Touch Controller

33.1 Features

- Low-Power, High-Sensitivity, Environmentally Robust Capacitive Touch Buttons, Sliders, Wheels and 2D Surface
- Supports Wake-up on Touch from Standby Sleep Mode
- Supports Mix-and-Match Mutual and Self-Capacitance Sensing
  - 18/22/32/46 buttons in Self-Capacitance mode, for 28-/32-/48-/64-pins, respectively
  - 81/121/256/529 buttons in Mutual Capacitance mode, for 28-/32-/48-/64-pins, respectively
- One Pin per Electrode – No External Components
- Load Compensating Charge Sensing:
  - Parasitic capacitance compensation
  - Adjustable gain for superior sensitivity
- Zero Drift Over the Temperature and V_{DD} Range:
  - Auto-calibration and recalibration of sensors
- Single-Shot and Free-Running Charge Measurement
- Hardware Noise Filtering and Noise Signal Desynchronization for High Conducted Immunity
- Supports Analog Accumulation and Digital Accumulation
- Driven Shield+ for Superior Noise Immunity and Moisture Tolerance
  - Any PTC X/Y line can be used for the driven shield
  - All enabled sensors will be driven at the same potential as the sensor scanned
- Boost Mode for Doubled Signal-to-Noise Ratio or 4x Faster Response Time in Mutual Capacitance Systems
- Selectable Channel Change Delay Allows Choosing the Settling Time on a New Channel, as Required
- Acquisition-Start Triggered by Command or through Auto-Triggering Feature
- Low CPU Utilization through Interrupt on Acquisition-Complete
- Supported by the START QTouch® Configurator Development Tools
- Window Monitor to Compare Value to Predefined Threshold Values

33.2 Overview

The Peripheral Touch Controller (PTC) acquires signals to detect a touch on capacitive sensors. The external capacitive touch sensor is typically formed on a PCB or a transparent substrate with a transparent or translucent material such as indium tin oxide (ITO) or PEDOT. An increasingly popular implementation is printing the sensor electrodes directly on the backside of the touch surface using conductive inks. The sensor electrodes are connected to the analog front end of the PTC through the I/O pins in the device. The PTC supports both mutual and self-capacitance sensors.

In Mutual Capacitance mode, sensing is done using capacitive touch matrices in various X-Y configurations. The PTC requires one pin per X-line and one pin per Y-line. See Figure 33-1.

In Self-Capacitance mode, the PTC requires one pin (Y-line) for each touch sensor. See Figure 33-2.

The number of available pins and the assignment of X- and Y-lines depend on both package type and device configuration.

© 2021 Microchip Technology Inc.
and its subsidiaries

chanhvinh.com

33.3 Block Diagram

Figure 33-1. PTC Block Diagram in Mutual Capacitance Mode

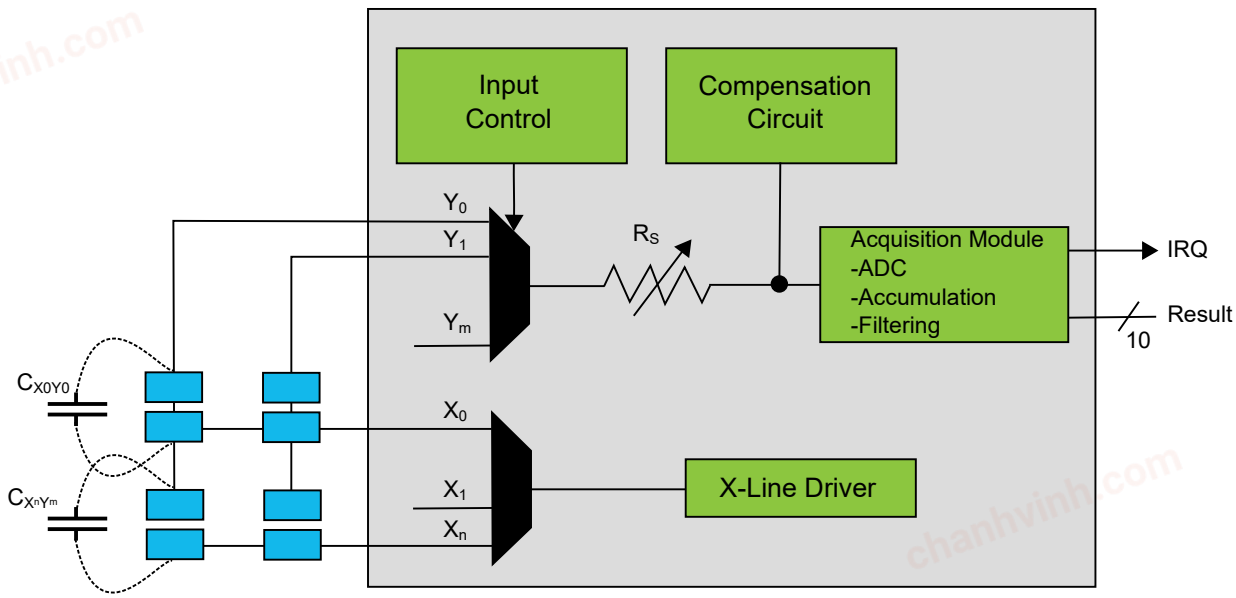

Figure 33-2. PTC Block Diagram in Self-Capacitance Mode

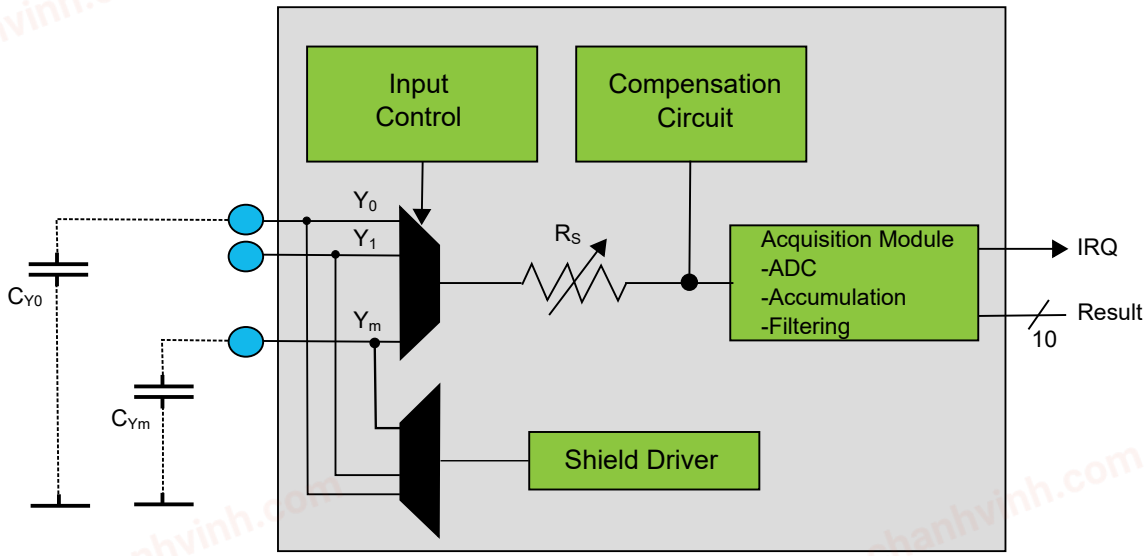

Note: The internal series resistor, R_S, has limited effect in Self-Capacitance mode. It is always recommended to add an external series resistor.

chanhvinh.com

33.4 Signal Description

Table 33-1. Signal Description

Name	Type	Description
Y[m:0]	Analog	Y-line (Input/Output)
X[n:0]	Digital	X-line (Output)

Note: The number of X- and Y-lines are device-dependent. Refer to the *Family Overview* section for details.

For available pins and functionalities, refer to the *I/O Multiplexing and Considerations* section in the device data sheet.

33.5 System Dependencies

To use this peripheral, configure the other components of the system, as described in the following sections.

33.5.1 I/O Lines

The I/O lines used for analog X- and Y-lines must be connected to external capacitive touch sensor electrodes. External components are not required for normal operation, however, to improve EMC susceptibility, a series resistor of up to 100 kΩ can be added to the Y-lines. In Mutual Capacitance mode, a series resistor of up to 10 kΩ can be added to the X-lines to reduce EMC emissions.

33.5.1.1 Mutual Capacitance Sensor Arrangement

A mutual capacitance sensor is formed between two I/O lines - an X-electrode for transmitting and a Y-electrode for sensing. The mutual capacitance between the X- and Y-electrodes is measured by the PTC.

Figure 33-3. Mutual Capacitance Sensor Arrangement

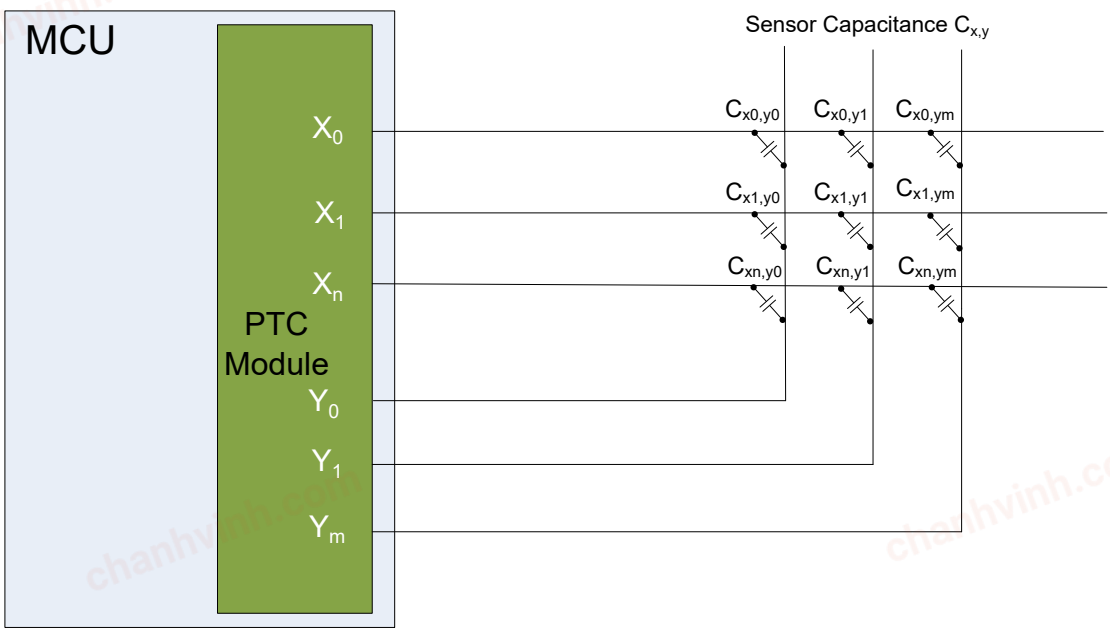

33.5.1.2 Self-Capacitance Sensor Arrangement

A self-capacitance sensor is connected to a single pin on the PTC through the Y-electrode. The sense electrode capacitance is measured by the PTC.

chanhvinh.com

Figure 33-4. Self-Capacitance Sensor Arrangement

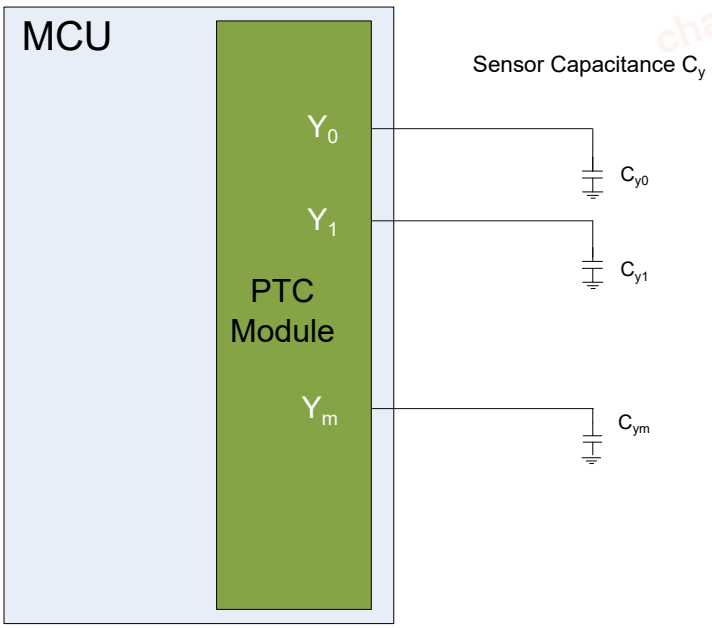

For more information about designing the touch sensor, refer to the AN2934, "Capacitive Touch Sensor Design Guide (DS00002934)".

33.5.2 Clocks

The PTC is clocked by the internal PTC-ADC clock or by the CLK_PER clock. Refer to the *Clock Controller* section for considerations on configuring the CLK_PER.

33.6 Functional Description

To access the PTC, the START QTouch Configurator must be used to configure the QTouch Library and link it to the application software. The QTouch Library can be used to implement buttons, sliders and wheels in a variety of combinations on a single interface.

Figure 33-5. QTouch® Library Usage

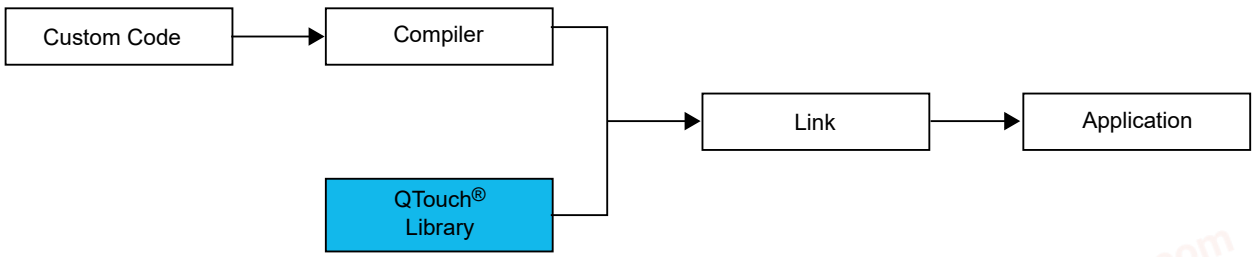

For more information about QTouch Library, refer to the "QTouch® Modular Library Peripheral Touch Controller User's Guide (DS40001986)".

chanhvinh.com

34. ZCD - Zero-Cross Detector

34.1 Features

- Detect Zero-Crossings on High-Voltage Alternating Signals
- Only One External Resistor Required
- The Detector Output is Available on a Pin
- The Polarity of the Detector Output can be Inverted
- Interrupt Generation on:
  - Rising edge
  - Falling edge
  - Both edges
- Event Generation:
  - Detector output

34.2 Overview

The Zero-Cross Detector (ZCD) detects when an alternating voltage crosses through a threshold voltage near the ground potential. The threshold is the zero-cross reference voltage, Z_{CPINV}, and the typical value can be found in the *Electrical Specifications* section of the peripheral.

The connection from the ZCD input pin (ZCIN) to the alternating voltage must be made through a series current-limiting resistor (R_{SERIES}). The ZCD applies either a current source or sink to the ZCD input pin to maintain a constant voltage on the pin, thereby preventing the pin voltage from forward biasing the ESD protection diodes in the device. When the applied voltage is greater than the reference voltage, the ZCD sinks current. When the applied voltage is less than the reference voltage, the ZCD sources current.

The ZCD can be used when monitoring an alternating waveform for, but not limited to, the following purposes:

- Period Measurement
- Accurate Long-Term Time Measurement
- Dimmer Phase-Delayed Drive
- Low-EMI Cycle Switching

© 2021 Microchip Technology Inc.
and its subsidiaries

chanhvinh.com

34.2.1 Block Diagram

Figure 34-1. Zero-Cross Detector

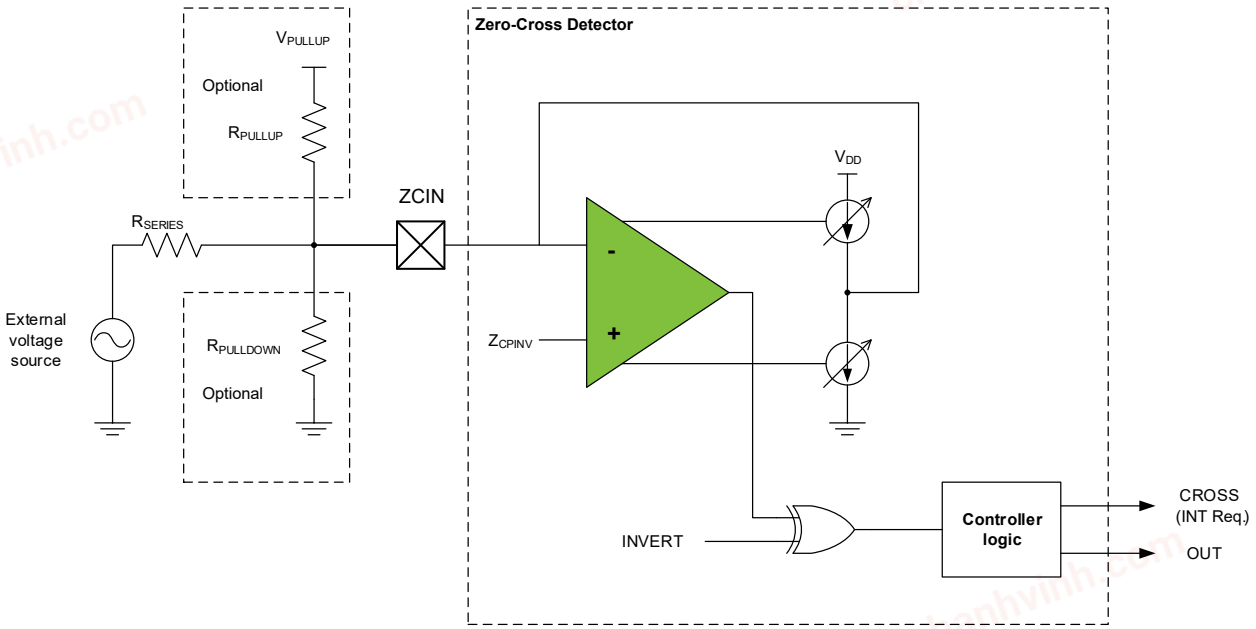

34.2.2 Signal Description

Signal	Description	Type
ZCIN	Input	Analog
OUT	Output	Digital

34.3 Functional Description

34.3.1 Initialization

For basic operation, follow these steps:

- Configure the desired input pin in the PORT peripheral as an analog pin with digital input buffer disabled. Internal pull-up and pull-down resistors must also be disabled.
- Optional: Enable the output pin by writing a '1' to the Output Enable (OUTEN) bit in the Control A (ZCDn.CTRLA) register.
- Enable the ZCD by writing a '1' to the ENABLE bit in ZCDn.CTRLA

After the ZCD is enabled, there is a start-up time during which the output of the ZCD may be invalid. The start-up time can be determined by referring to the ZCD electrical characteristics for the device.

34.3.2 Operation

34.3.2.1 External Resistor Selection

The ZCD requires a current-limiting resistor in series (R_{SERIES}) with the external voltage source. If the peak amplitude (V_{PEAK}) of the external voltage source is expected to be stable, the resistor value must be chosen such that an $I_{ZCD_MAX}/2$ resistor current results in a voltage drop equal to the expected peak voltage. The power rating of the resistor should be at least the mean square voltage divided by the resistor value. (How to handle a peak voltage that varies between a minimum ($V_{MINPEAK}$) and maximum ($V_{MAXPEAK}$) value is described in the section below on **Handling V_{PEAK} Variations**.)

chanhvinh.com

Equation 34-1. External Resistor

$$R_{SERIES} = \frac{V_{PEAK}}{3 \times 10^{-4}}$$

Figure 34-2. External Voltage Source

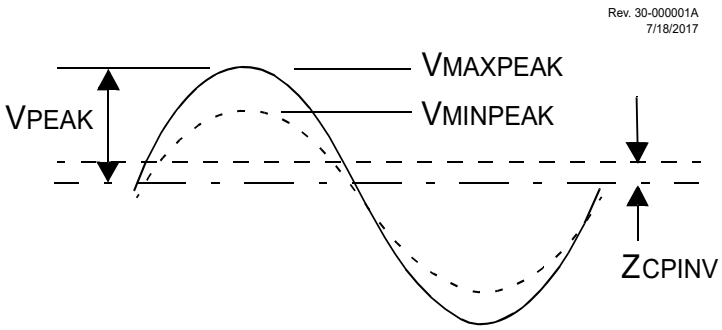

34.3.2.2 ZCD Logic Output

The STATE flag in the ZCDn.STATUS register indicates whether the input signal is above or below the reference voltage, Z_{CPINV}. By default, the STATE flag is '1' when the input signal is above the reference voltage and '0' when the input signal is below the reference voltage. The polarity of the STATE flag can be reversed by writing the INVERT bit to '1' in the ZCDn.CTRLA register. The INVERT bit will also affect ZCD interrupt polarity.

34.3.2.3 Correction for Z_{CPINV} Offset

The actual voltage at which the ZCD switches is the zero-cross reference voltage. Because this reference voltage is slightly offset from the ground, the zero-cross event generated by the ZCD will occur either early or late for the true zero-crossing.

34.3.2.3.1 Correction By Offset Current

When the alternating waveform is referenced to the ground, as shown in the figure below, the zero-cross is detected too late as the waveform rises and too early as the waveform falls.

Figure 34-3. Sine Wave Referenced to Ground

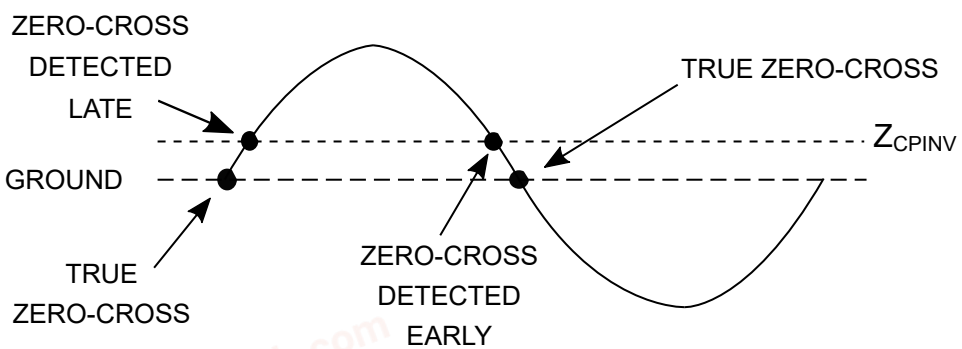

When the waveform is referenced to V_{DD}, as shown in the figure below, the zero-cross is detected too late as the waveform falls and too early as the waveform rises.

chanhvinh.com

Figure 34-4. Sine Wave Referenced to V_{DD}

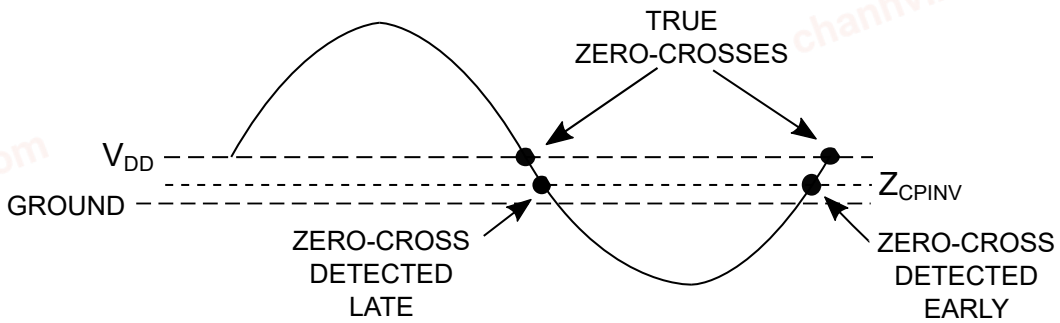

The actual offset time can be determined for sinusoidal waveforms of a known frequency f using the equations shown below.

Equation 34-2. ZCD Event Offset

When the External Voltage source is referenced to ground

$$T_{offset} = \frac{\sin^{-1}\left(\frac{Z_{CPINV}}{V_{PEAK}}\right)}{2\pi f}$$

When the External Voltage source is referenced to V_{DD}

$$T_{offset} = \frac{\sin^{-1}\left(\frac{V_{DD} - Z_{CPINV}}{V_{PEAK}}\right)}{2\pi f}$$

This offset time can be compensated by adding a pull-up or pull-down biasing resistor to the ZCD input pin. A pull-up resistor is used when the external voltage source is referenced to ground, as shown in the figure below.

Figure 34-5. External Voltage Source Referenced to Ground

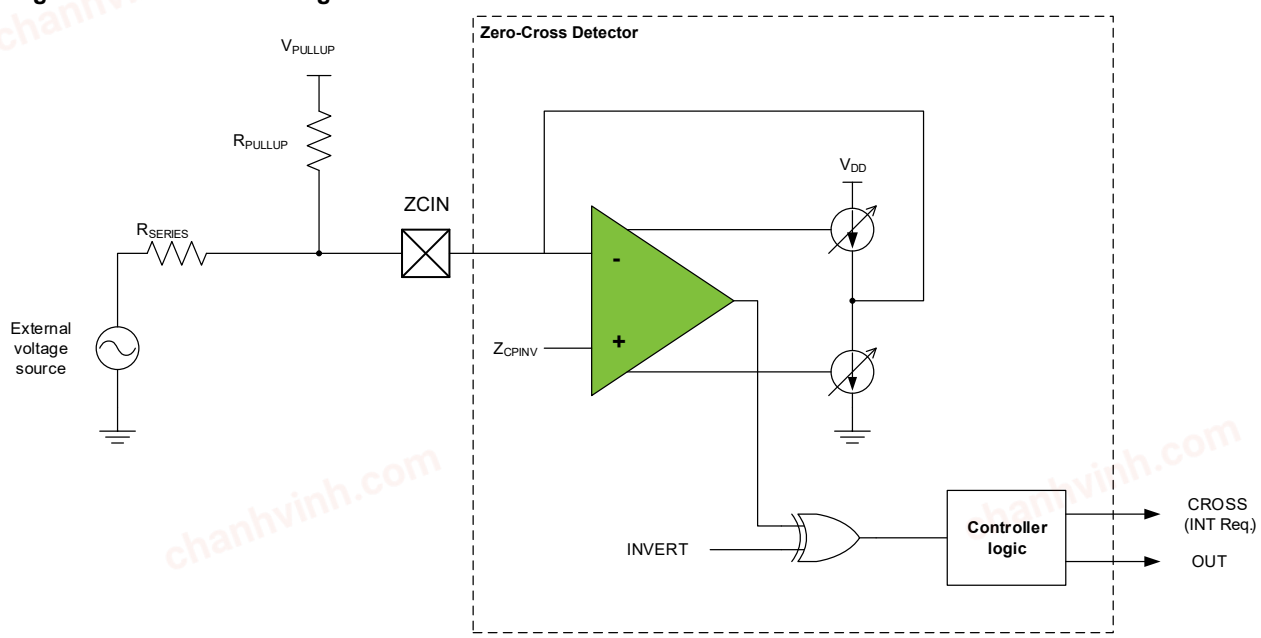

A pull-down resistor is used when the voltage is referenced to V_{DD}, as shown in the figure below.

chanhvinh.com

Figure 34-6. External Voltage Source Referenced to V_{DD}

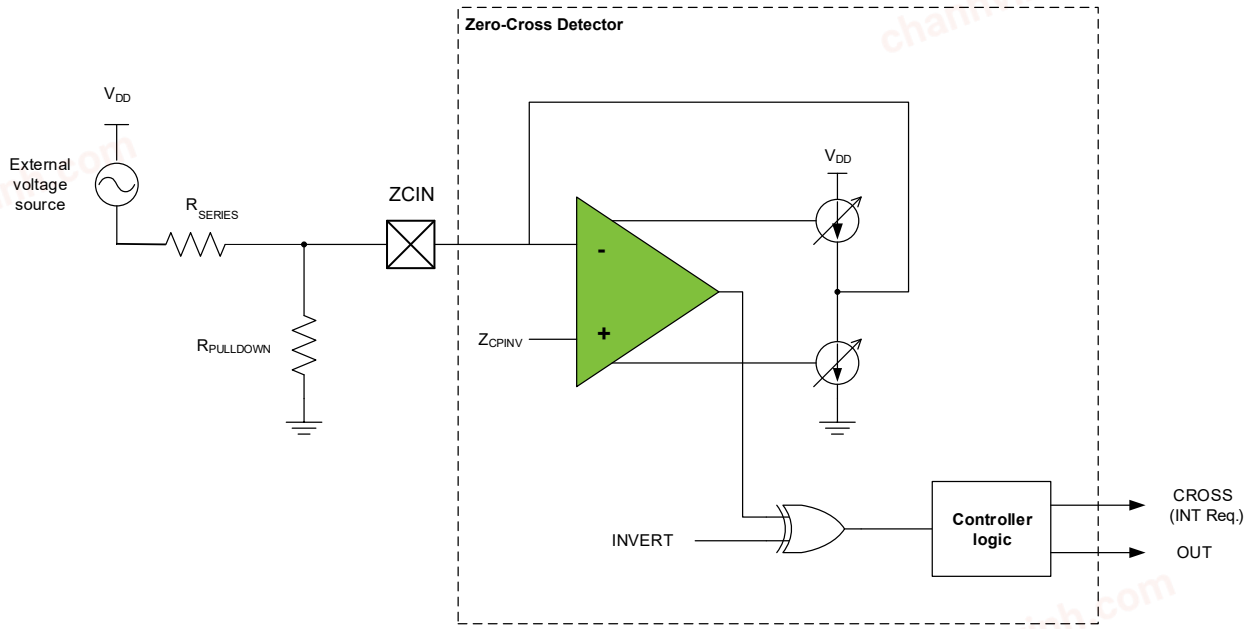

The resistor adds a bias to the ZCD input pin so that the external voltage source must go to zero to pull the pin voltage to the Z_{CPINV} switching voltage. The pull-up or pull-down value can be determined with the equations shown below.

Equation 34-3. ZCD Pull-up/Pull-down Resistor

When the External Voltage source is referenced to ground

$$R_{pullup} = \frac{R_{SERIES}\left(V_{pullup} - Z_{CPINV}\right)}{Z_{CPINV}}$$

When the External Voltage source is referenced to V_{DD}

$$R_{pulldown} = \frac{R_{SERIES}(Z_{CPINV})}{(V_{DD} - Z_{CPINV})}$$

34.3.2.3.2 Correction by AC Coupling

When the external voltage source is sinusoidal, the effects of the Z_{CPINV} offset can be eliminated by isolating the external voltage source from the ZCD input pin with a capacitor in series with the current-limiting resistor, as shown in the figure below.

chanhvinh.com

Figure 34-7. AC Coupling the ZCD

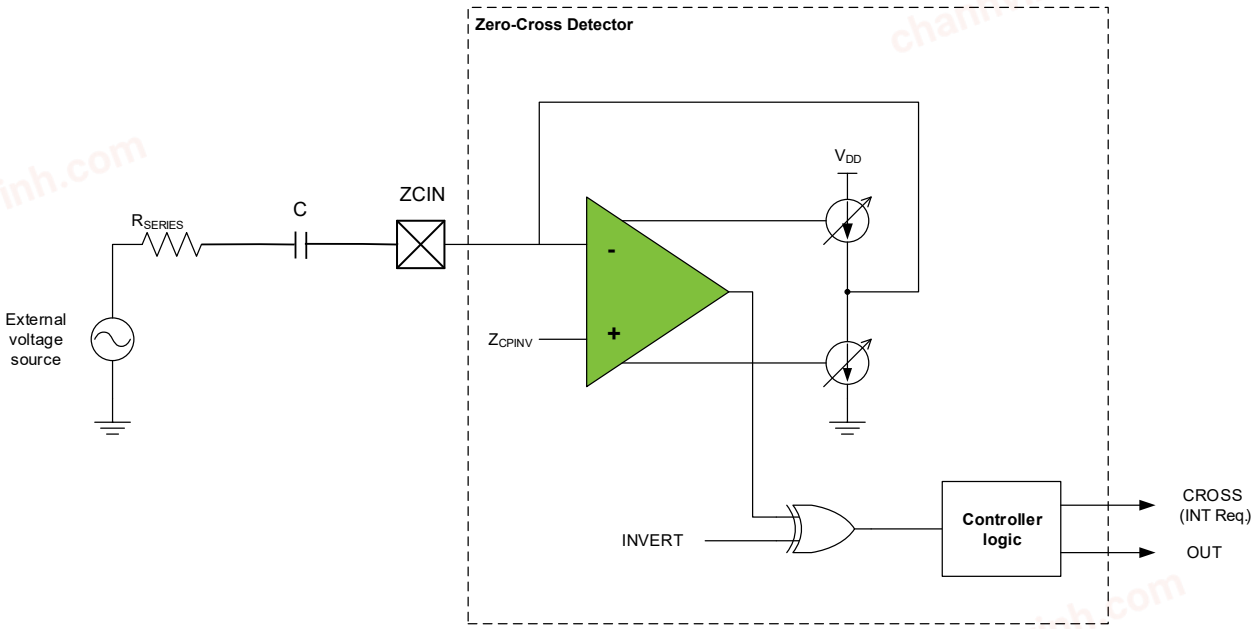

The phase shift resulting from the capacitor will cause the ZCD output to switch in advance of the actual zero-crossing event. The phase shift will be the same for both rising and falling zero-crossings, which can be compensated for by either delaying the CPU response to the ZCD switch by a timer or other means or selecting a capacitor value large enough that the phase shift is negligible.

To determine the series resistor and capacitor values for this configuration, start by computing the impedance, Z, to obtain a peak current of $I_{ZCD_MAX}/2$. Next, select a suitably large non-polarized capacitor and compute its reactance, X_C, at the external voltage source frequency. Finally, compute the series resistor (R_{SERIES}), capacitor peak voltage, and phase shift by using the formulas shown below.

When this technique is used, and the input signal is not present, the ZCD may oscillate. Oscillation can be prevented by connecting the ZCD input pin to ground with a high-value resistor such as 200 kΩ, but this resistor will introduce an offset in the detection of the zero-cross event.

Equation 34-4. R-C Equations

V_{PEAK} = External voltage source peak voltage

f = External voltage source frequency

C = Series capacitor

R = Series resistor

V_C = Peak capacitor voltage

Φ = Capacitor-induced zero-crossing phase advance in radians

T_Φ = Time zero-cross event occurs before actual zero-crossing

$$Z = \frac{V_{PEAK}}{3 \times 10^{-4}}$$

$$X_C = \frac{1}{2\pi f C}$$

$$R = \sqrt{Z^2 - {X_C}^2}$$

$$V_C = X_C\left(3 \times 10^{-4}\right)$$

chanhvinh.com

$$\Phi = \tan^{-1}\theta\left(\frac{X_C}{R}\right)$$

$$T_\Phi = \frac{\Phi}{2\pi f}$$

Equation 34-5. R-C Calculation Example

$$V_{rms} = 120$$

$$V_{PEAK} = V_{rms} \times \sqrt{2} = 169.7$$

$$f = 60\ Hz$$

$$C = 0.1\ \mu F$$

$$Z = \frac{V_{PEAK}}{3 \times 10^{-4}} = \frac{169.7}{3 \times 10^{-4}} = 565.7\ k\Omega$$

$$X_C = \frac{1}{2\pi f C} = \frac{1}{2\pi \times 60 \times 10^{-7}} = 26.53\ k\Omega$$

$$R = \sqrt{Z^2 - {X_C}^2} = 565.1\ k\Omega\ (computed)$$

$$R_a = 560\ k\Omega\ (used)$$

$$Z_R = \sqrt{{R_a}^2 + {X_C}^2} = 560.6\ k\Omega$$

$$I_{PEAK} = \frac{V_{PEAK}}{Z_R} = 302.7 \times 10^{-6} A$$

$$V_C = X_C \times I_{PEAK} = 8.0\ V$$

$$\Phi = \tan^{-1}\theta\left(\frac{X_C}{R}\right) = 0.047 radians$$

$$T_\Phi = \frac{\Phi}{2\pi f} = 125.6 \mu s$$

34.3.2.4 Handling V_{PEAK} Variations

If the peak amplitude of the external voltage is expected to vary, the series resistor (R_{SERIES}) must be selected to keep the ZCD source and sink currents below the absolute maximum rating of $\pm I_{ZCD_MAX}$ and above a reasonable minimum range. A general rule of thumb for the ZCD is that the maximum peak voltage should be no more than six times the minimum peak voltage. To ensure that the maximum current does not exceed $\pm I_{ZCD_MAX}$ and the minimum is at least $I_{ZCD_MAX}/6$, compute the series resistance, as shown in the equation below. The compensating pull-up or pull-down for this series resistance can be determined using the **ZCD Pull-up/Pull-down Resistor** equations shown earlier, as the pull-up/pull-down resistor value is independent of the peak voltage.

Equation 34-6. Series Resistor for External Voltage Range

$$R_{SERIES} = \frac{V_{MAXPEAK} + V_{MINPEAK}}{7 \times 10^{-4}}$$

34.3.3 Events

The ZCD can generate the following events:

chanhvinh.com

Table 34-1. ZCD Event Generator

Generator Name		Description	Event Type	Generating Clock Domain	Length of Event
Peripheral	Event				
ZCDn	OUT	ZCD output level	Level	Asynchronous	Determined by the ZCD output level

The ZCD has no event inputs. Refer to the Event System (EVSYS) section for more details regarding event types and Event System configuration.

34.3.4 Interrupts

Table 34-2. Available Interrupt Vectors and Sources

Name	Vector Description	Conditions
CROSS	ZCD interrupt	Zero-cross detection as configured by INTMODE in ZCDn.INTCTRL and INVERT in ZCDn.CTRLA

When a ZCD interrupt condition occurs, the CROSSIF flag is set in the Status (ZCDn.STATUS) register.

ZCD interrupts are enabled or disabled by writing to the INTMODE field in the Interrupt Control (ZCDn.INTCTRL) register.

A ZCD interrupt request is generated when the interrupt source is enabled, and the CROSSIF flag is set. The interrupt request remains active until the interrupt flag is cleared. See the ZCDn.STATUS register description for details on how to clear interrupt flags.

34.3.5 Sleep Mode Operation

In Idle sleep mode, the ZCD will continue to operate as normal.

In Standby sleep mode, the ZCD is disabled by default. If the Run in Standby (RUNSTDBY) bit in the Control A (ZCDn.CTRLA) register is written to '1', the ZCD will continue to operate as normal with interrupt generation, event generation, and ZCD output on pin even if CLK_PER is not running in Standby sleep mode.

In Power Down sleep mode, the ZCD is disabled, including its output to pin.

© 2021 Microchip Technology Inc.
and its subsidiaries

chanhvinh.com

34.4 Register Summary

Offset	Name	Bit Pos.	7	6	5	4	3	2	1	0
0x00	CTRLA	7:0	RUNSTDBY	OUTEN			INVERT			ENABLE
0x01	Reserved									
0x02	INTCTRL	7:0							INTMODE[1:0]	
0x03	STATUS	7:0				STATE				CROSSIF

34.5 Register Description

chanhvinh.com

34.5.1 Control A

Name: CTRLA
Offset: 0x00
Reset: 0x00
Property: -

Bit	7	6	5	4	3	2	1	0
	RUNSTDBY	OUTEN			INVERT			ENABLE
Access	R/W	R/W			R/W			R/W
Reset	0	0			0			0

Bit 7 – RUNSTDBY Run in Standby
Writing this bit to '1' will cause the ZCD to remain active when the device enters Standby sleep mode.

Bit 6 – OUTEN Output Pin Enable
Writing this bit to '1' connects the OUT signal to a supported pin.

Bit 3 – INVERT Invert Enable
Writing this bit to '1' inverts the ZCD output.

Bit 0 – ENABLE ZCD Enable
Writing this bit to '1' enables the ZCD.

chanhvinh.com

34.5.2 Interrupt Control

Name: INTCTRL
Offset: 0x02
Reset: 0x00
Property: -

Bit	7	6	5	4	3	2	1	0
							INTMODE[1:0]	
Access							R/W	R/W
Reset							0	0

Bits 1:0 – INTMODE[1:0] Interrupt Mode
Writing to these bits selects which edge(s) of the ZCD OUT signal will trigger the ZCD interrupt request.

Value	Name	Description
0x0	NONE	No interrupt
0x1	RISING	Interrupt on rising OUT signal
0x2	FALLING	Interrupt on falling OUT signal
0x3	BOTH	Interrupt on both rising and falling OUT signal

chanhvinh.com

chanhvinh.com

34.5.3 Status

Name: STATUS
Offset: 0x03
Reset: 0x00
Property: -

Bit	7	6	5	4	3	2	1	0
				STATE				CROSSIF
Access				R				R/W
Reset				0				0

Bit 4 – STATE ZCD State
This bit indicates the current status of the OUT signal from the ZCD. This includes a three-cycle synchronizer delay.

Bit 0 – CROSSIF Cross Interrupt Flag
This is the zero-cross interrupt flag. Writing this bit to '1' will clear the interrupt flag. Writing this bit to '0' will have no effect.

chanhvinh.com

35. UPDI - Unified Program and Debug Interface

35.1 Features

- UPDI One-Wire Interface for External Programming and On-Chip-Debugging (OCD)
  - Uses as a dedicated pin of the device for programming
  - No GPIO pins occupied during the operation
  - Asynchronous half-duplex UART protocol towards the programmer
- Programming:
  - Built-in error detection and error signature generation
  - Override of response generation for faster programming
- Debugging:
  - Memory-mapped access to device address space (NVM, RAM, I/O)
  - No limitation on the device clock frequency
  - Unlimited number of user program breakpoints
  - Two hardware breakpoints
  - Support for advanced OCD features
    - Run-time readout of the CPU Program Counter (PC), Stack Pointer (SP) and Status Register (SREG) for code profiling
    - Detection and signalization of the Break/Stop condition in the CPU
    - Program flow control for Run, Stop and Reset debug instructions
  - Nonintrusive run-time chip monitoring without accessing the system registers
  - Interface for reading the result of the CRC check of the Flash on a locked device

35.2 Overview

The Unified Program and Debug Interface (UPDI) is a proprietary interface for external programming and OCD of a device.

The UPDI supports programming of Nonvolatile Memory (NVM) space, Flash, EEPROM, fuses, lock bits, and the user row. Some memory-mapped registers are accessible only with the correct access privilege enabled (key, lock bits) and only in the OCD Stopped mode or specific programming modes. These modes are unlocked by sending the correct key to the UPDI. See the *NVMCTRL - Nonvolatile Memory Controller* section for programming via the NVM controller and executing NVM controller commands.

The UPDI is partitioned into three separate protocol layers: The UPDI Physical (PHY) layer, the UPDI Data Link (DL) layer, and the UPDI Access (ACC) layer. The default PHY layer handles bidirectional UART communication over the UPDI pin line towards a connected programmer/debugger. It also provides data recovery and clock recovery on an incoming data frame in the One-Wire Communication mode. Received instructions and corresponding data are handled by the DL layer, which sets up the communication with the ACC layer based on the decoded instruction. Access to the system bus and memory-mapped registers is granted through the ACC layer.

Programming and debugging are done through the PHY layer, which is a one-wire UART based on a half-duplex interface using as a dedicated pin for data reception and transmission. A dedicated internal oscillator clocks the PHY layer.

The ACC layer is the interface between the UPDI and the connected bus matrix. This layer grants access via the UPDI interface to the bus matrix with memory-mapped access to system blocks such as memories, NVM, and peripherals.

The Asynchronous System Interface (ASI) provides direct interface access to select features in the OCD, NVM, and System Management systems. This gives the debugger direct access to system information without requesting bus access.

© 2021 Microchip Technology Inc.
and its subsidiaries

chanhvinh.com

35.2.1 Block Diagram

Figure 35-1. UPDI Block Diagram

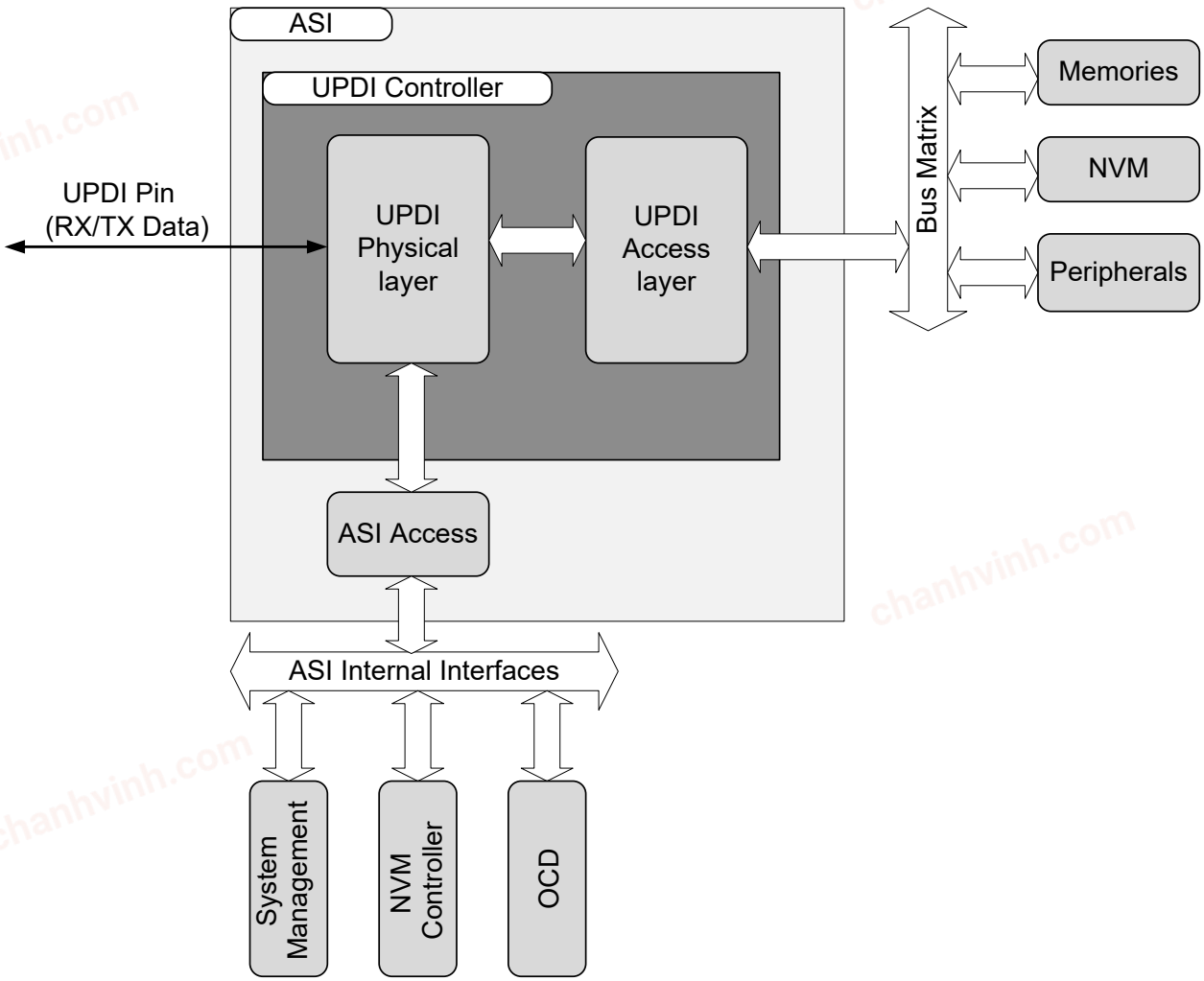

35.2.2 Clocks

The PHY layer and the ACC layer can operate on different clock domains. The PHY layer clock is derived from the dedicated internal oscillator, and the ACC layer clock is the same as the peripheral clock. There is a synchronization boundary between the PHY and the ACC layer, which ensures correct operation between the clock domains. The UPDI clock output frequency is selected through the ASI, and the default UPDI clock start-up frequency is 4 MHz after enabling or resetting the UPDI. The UPDI clock frequency can be changed by writing to the UPDI Clock Divider Select (UPDICLKSEL) bit field in the ASI Control A (UPDI.ASI_CTRLA) register.

chanhvinh.com

Figure 35-2. UPDI Clock Domains

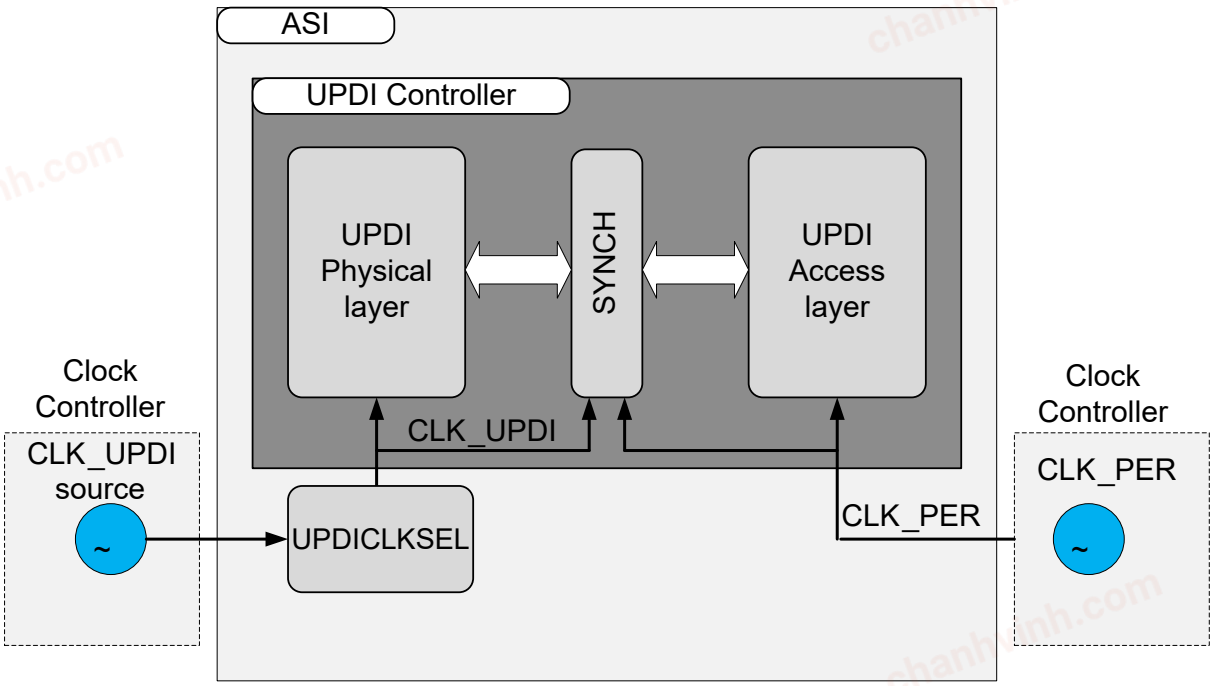

35.2.3 Physical Layer

The PHY layer is the communication interface between a connected programmer/debugger and the device. The main features of the PHY layer can be summarized as follows:

- Dedicated pin on the device with no other function
- Support for UPDI One-Wire mode, using asynchronous, half-duplex UART communication on the UPDI pin
- Internal baud detection, clock and data recovery on the UART frame
- Error detection (parity, clock recovery, frame, system errors)
- Transmission response generation (ACK)
- Generation of error signatures during operation
- Guard time control

35.2.4 Pinout Description

The following table shows the functionality of the pin used by the UPDI. See the *I/O Multiplexing* section in the device data sheet for more information about the UPDI physical pin.

Function	Pin Name
UPDI	UPDI

35.3 Functional Description

35.3.1 Principle of Operation

The communication through the UPDI is based on standard UART communication, using a fixed frame format and automatic baud rate detection for clock and data recovery. In addition to the data frame, several control frames are important to the communication: DATA, IDLE, BREAK, SYNCH, ACK.

chanhvinh.com

Figure 35-3. Supported UPDI Frame Formats

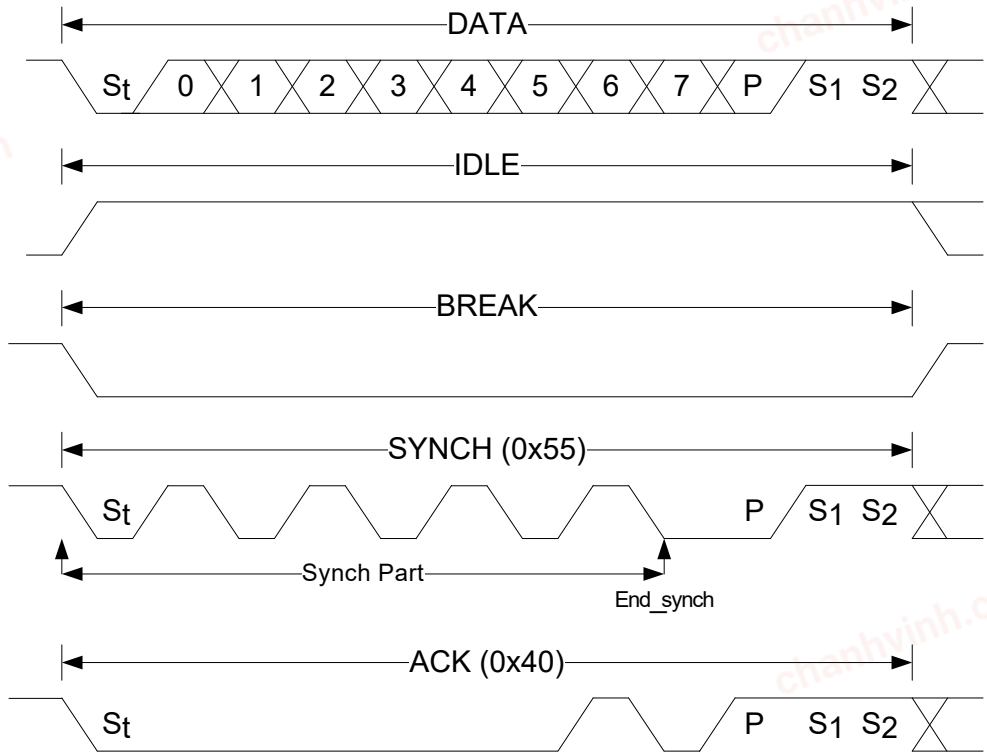

Frame	Description
DATA	A DATA frame consists of one Start (St) bit, which is always low, eight Data bits, one Parity (P) bit for even parity, and two Stop (S1 and S2) bits, which are always high. If the Parity bit or Stop bits have an incorrect value, an error will be detected and signalized by the UPDI. The parity bit-check in the UPDI can be disabled by writing to the Parity Disable (PARD) bit in the Control A (UPDI.CTRLA) register, in which case the parity generation from the debugger is ignored.
IDLE	IDLE is a specific frame that consists of at least 12 high bits, which is the same as keeping the transmission line in an Idle state
BREAK	BREAK is a specific frame that consists of at least 12 low bits. It is used to reset the UPDI back to its default state and is typically used for error recovery.
SYNCH	The Baud Rate Generator uses the SYNCH frame to set the baud rate for the coming transmission. A SYNCH character is always expected by the UPDI in front of every new instruction and after a successful BREAK has been transmitted.
ACK	The ACK frame is transmitted from the UPDI whenever an `ST` or `STS` instruction has successfully crossed the synchronization boundary and gained bus access. When an ACK is received by the debugger, the next transmission can start.

35.3.1.1 UPDI UART

The communication is initiated from the debugger/programmer side. Every transmission must start with a SYNCH character, which the UPDI can use to recover the transmission baud rate and store this setting for the incoming data. The baud rate set by the SYNCH character will be used for both reception and transmission of the subsequent instruction and data bytes. See the *UPDI Instruction Set* section for details on when the next SYNCH character is expected in the instruction stream.

There is no writable Baud Rate register in the UPDI, so the baud rate sampled from the SYNCH character is used for data recovery when sampling the data byte.

chanhvinh.com

The transmission baud rate of the PHY layer is related to the selected UPDI clock, which can be adjusted by writing to the UPDI Clock Divider Select (UPDICLKSEL) bit field in the ASI Control A (UPDI.ASI_CTRLA) register. The receive and transmit baud rates are always the same within the accuracy of the auto-baud. It is recommended that the clock frequency does not run faster than the required frequency for the desired baud rate. The default UPDICLKSEL setting after Reset and enable is 4 MHz. Any other clock output selection is only recommended when the BOD is at the highest level. For all other BOD settings, the default 4 MHz selection is recommended.

Table 35-1. Recommended UART Baud Rate Based on UPDICLKSEL Setting

UPDICLKSEL[1:0]	Max. Recommended Baud Rate	Min. Recommended Baud Rate
0x0 (32 MHz)	1.6 Mbps	0.600 kbps
0x1 (16 MHz)	0.9 Mbps	0.300 kbps
0x2 (8 MHz)	450 kbps	0.150 kbps
0x3 (4 MHz) - Default	225 kbps	0.075 kbps

The UPDI Baud Rate Generator utilizes fractional baud counting to minimize the transmission error. With the fixed frame format used by the UPDI, the maximum and recommended receiver transmission error limits can be seen in Table 35-2.

Table 35-2. Receiver Baud Rate Error

Data + Parity Bits	R_{slow}	R_{fast}	Max. Total Error [%]	Recommended Max. RX Error [%]
9	96.39	104.76	+4.76/-3.61	+1.5/-1.5

35.3.1.2 BREAK Character

The BREAK character is used to reset the internal state of the UPDI to the default setting. This is useful if the UPDI enters an Error state due to a communication error or when the synchronization between the debugger and the UPDI is lost.

To ensure that a BREAK is successfully received by the UPDI in all cases, the debugger must send two consecutive BREAK characters. The first BREAK will be detected if the UPDI is in an Idle state and will not be detected if it is sent while the UPDI is receiving or transmitting (at a very low baud rate). However, this will cause a frame error for the reception (RX) or a contention error for the transmission (TX) and abort the ongoing operation. The UPDI will then detect the next BREAK successfully.

Upon receiving a BREAK, the UPDI oscillator setting in the ASI Control A (UPDI.ASI_CTRLA) register is reset to the 4 MHz default UPDI clock selection, which changes the baud rate range of the UPDI, according to the *Recommended UART Baud Rate Based on UPDICLKSEL Setting* table above.

35.3.1.2.1 BREAK in One-Wire Mode

In One-Wire mode, the programmer/debugger and UPDI can be totally out of synch, requiring a worst-case length for the BREAK character to be sure that the UPDI can detect it. Assuming the slowest UPDI clock speed of 4 MHz (250 ns), the maximum length of the 8-bit SYNCH pattern value that can be contained in 16 bits is $65535 \times 250\ \text{ns} = 16.4\ \text{ms/byte} = 16.4\ \text{ms}/8\ \text{bits} = 2.05\ \text{ms/bit}$.

This gives a worst-case BREAK frame duration of $2.05\ \text{ms} \times 12\text{bits} \approx 24.6\ \text{ms}$ for the slowest prescaler setting. When the prescaler setting is known, the time of the BREAK frame can be relaxed according to the values from Table 35-3.

Table 35-3. Recommended BREAK Character Duration

UPDICLKSEL[1:0]	Recommended BREAK Character Duration
0x0 (32 MHz)	3.075 ms
0x1 (16 MHz)	6.15 ms
0x2 (8 MHz)	12.30 ms
0x3 (4 MHz)	24.60 ms

© 2021 Microchip Technology Inc. and its subsidiaries

chanhvinh.com

35.3.1.3 SYNCH Character

The SYNCH character has eight bits and follows the regular UPDI frame format. It has a fixed value of `0x55`. The SYNCH character has two main purposes:

1. It acts as the enabling character for the UPDI after a disable.
2. It is used by the Baud Rate Generator to set the baud rate for the subsequent transmission. If an invalid SYNCH character is sent, the next transmission will not be sampled correctly.

35.3.1.3.1 SYNCH in One-Wire Mode

The SYNCH character is used before each new instruction. When using the `REPEAT` instruction, the SYNCH character is expected only before the first instruction after `REPEAT`.

The SYNCH is a known character which, through its property of toggling for each bit, allows the UPDI to measure how many UPDI clock cycles are needed to sample the 8-bit SYNCH pattern. The information obtained through the sampling is used to provide Asynchronous Clock Recovery and Asynchronous Data Recovery on reception and to keep the baud rate of the connected programmer when doing transmit operations.

35.3.2 Operation

The UPDI must be enabled before the UART communication can start.

35.3.2.1 UPDI Enabling

The devices have a dedicated UPDI pin with no other function. The enable sequence for the UPDI is device independent and is described in the following sections.

35.3.2.1.1 One-Wire Enable

The UPDI pin has an internal pull-up resistor, and by driving the UPDI pin low for more than 200 ns, a connected programmer will initiate the start-up sequence.

The negative edge transition will cause an edge detector (located in the high-voltage domain if it is in a multi-voltage system) to start driving the UPDI pin low, so when the programmer releases the line, it will stay low until the requested UPDI oscillator is ready. The expected arrival time for the clock will depend on the oscillator implementation regarding the accuracy, overshoot, and readout of the oscillator calibration. For a multi-voltage system, the line will be driven low until the regulator is at the correct level, and the system is powered up with the selected oscillator ready and stable. The programmer must poll the UPDI pin after releasing it the first time to detect when the pin transitions to high again. This transition means that the edge detector has released the pin (pull-up), and the UPDI can receive a SYNCH character. Upon successful detection of the SYNCH character, the UPDI is enabled and will prepare for the reception of the first instruction.

The enable transmission sequence is shown in Figure 35-4, where the active driving periods for the programmer and edge detector are included. The “UPDI pin” waveform shows the pin value at any given time.

The delay given for the edge detector active drive period is a typical start-up time waiting for 256 cycles on a 32 MHz oscillator + the calibration readout. Refer to the *Electrical Characteristics* section for details on the expected start-up times.

Note: The first instruction issued after the initial enable SYNCH does not need an extra SYNCH to be sent because the enable sequence SYNCH sets up the Baud Rate Generator for the first instruction.

To avoid the UPDI from staying enabled if an accidental trigger of the edge detector happens, the UPDI will automatically disable itself and lower its clock request. See the *Disable During Start-Up* section for more details.

UPDI Enable

The dedicated UPDI pad is configured as an input with a pull-up.

When the pull-up is detected, the debugger initiates the enable sequence by driving the line low for a duration of t_{Deb0}, as depicted in Figure 35-4:

chanhvinh.com

Figure 35-4. UPDI Enable Sequence

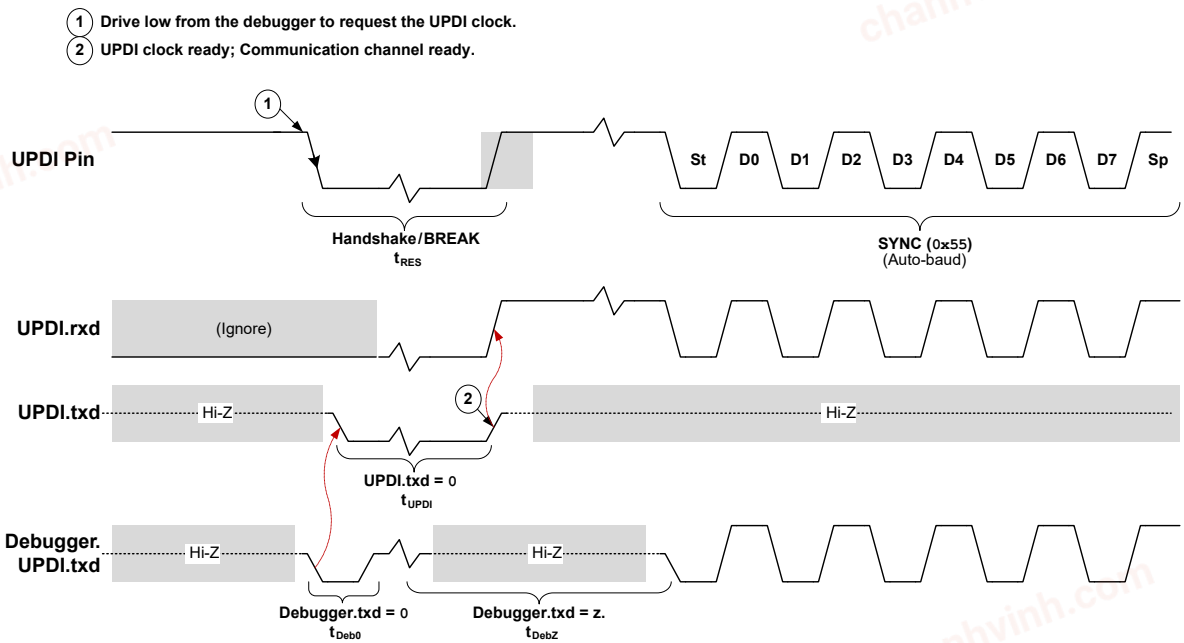

Table 35-4. Timing in the Figure

Timing Label	Max.	Min.
t_{RES}	200 µs	10 µs
t_{UPDI}	200 µs	10 µs
t_{Deb0}	1 µs	200 ns
t_{DebZ}	14 ms	200 µs

When the negative edge is detected, the UPDI clock starts. The UPDI will continue to drive the line low until the clock is stable and ready for the UPDI to use. The duration of t_{UPDI} will vary, depending on the status of the oscillator when the UPDI is enabled. After this duration, the data line will be released by the UPDI and pulled high.

When the debugger detects that the line is high, the initial SYNCH character `0x55` must be transmitted to synchronize the UPDI communication data rate. If the Start bit of the SYNCH character is not sent within maximum t_{DebZ}, the UPDI will disable itself, and the UPDI enabling sequence must be reinitiated. If the timing is violated, the UPDI is disabled to avoid unintentional enabling of the UPDI.

After a successful SYNCH character transmission, the first instruction frame can be transmitted.

35.3.2.2 UPDI Disabling

35.3.2.2.1 Disable During Start-Up

During the enable sequence, the UPDI can disable itself in case of an invalid enable sequence. There are two mechanisms implemented to reset any requests the UPDI has given to the Power Management and set the UPDI to the disabled state. A new enable sequence must then be initiated to enable the UPDI.

Time-Out Disable

When the start-up negative edge detector releases the pin after the UPDI has received its clock, or when the regulator is stable and the system has power in a multi-voltage system, the default pull-up drives the UPDI pin high. If the programmer does not detect that the pin is high and does not initiate a transmission of the SYNCH character within 16.4 ms at 4 MHz UPDI clock after the UPDI has released the pin, the UPDI will disable itself.

chanhvinh.com

Note: Start-up oscillator frequency is device-dependent. The UPDI will count for 65536 cycles on the UPDI clock before issuing the time-out.

Incorrect SYNCH Pattern
An incorrect SYNCH pattern is detected if the length of the SYNCH character is longer than the number of samples that can be contained in the UPDI Baud Rate register (overflow) or shorter than the minimum fractional count that can be handled for the sampling length of each bit. If any of these errors are detected, the UPDI will disable itself.

35.3.2.2.2 UPDI Regular Disable

Any programming or debugging session that does not require any specific operation from the UPDI after disconnecting the programmer has to be terminated by writing the UPDI Disable (UPDIDIS) bit in the Control B (UPDI.CTRLB) register, upon which the UPDI will issue a System Reset and disable itself. The Reset will restore the CPU to the Run state, independent of the previous state. It will also lower the UPDI clock request to the system and reset any UPDI KEYs and settings.

If the disable operation is not performed, the UPDI and the oscillator's request will remain enabled, which causes increased power consumption for the application.

35.3.2.3 UPDI Communication Error Handling

The UPDI contains a comprehensive error detection system that provides information to the debugger when recovering from an error scenario. The error detection consists of detecting physical transmission errors like parity error, contention error, and frame error, to more high-level errors like access time-out error. See the UPDI Error Signature (PESIG) bit field in the Status B (UPDI.STATUSB) register for an overview of the available error signatures.

Whenever the UPDI detects an error, it will immediately enter an internal Error state to avoid unwanted system communication. In the Error state, the UPDI will ignore all incoming data requests, except when a BREAK character is received. The following procedure must always be applied when recovering from an Error condition.

1. Send a BREAK character. See the *BREAK Character* section for recommended BREAK character handling.
2. Send a SYNCH character at the desired baud rate for the next data transfer.
3. Execute a Load Control Status (`LDCS`) instruction to read the UPDI Error Signature (PESIG) bit field in the Status B (UPDI.STATUSB) register and get the information about the occurred error.
4. The UPDI has now recovered from the Error state and is ready to receive the next SYNCH character and instruction.

35.3.2.4 Direction Change

To ensure correct timing for a half-duplex UART operation, the UPDI has a built-in guard time mechanism to relax the timing when changing direction from RX to TX mode. The guard time is represented by the Idle bits inserted before the next Start bit of the first response byte is transmitted. The number of Idle bits can be configured through the Guard Time Value (GTVAL) bit field in the Control A (UPDI.CTRLA) register. The duration of each Idle bit is given by the baud rate used by the current transmission.

Figure 35-5. UPDI Direction Change by Inserting Idle Bits

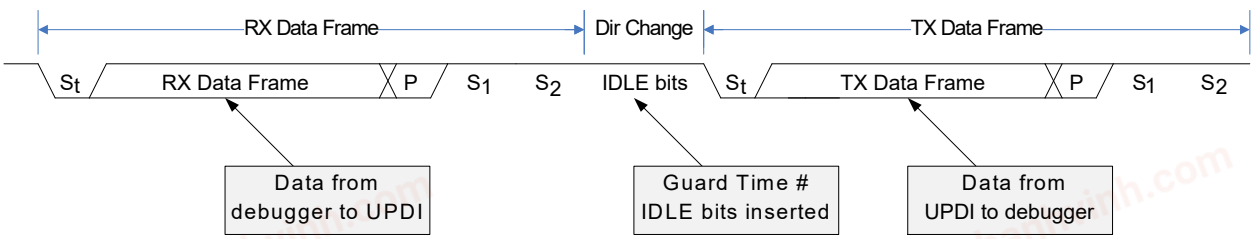

The UPDI guard time is the minimum Idle time that the connected debugger will experience when waiting for data from the UPDI. The maximum Idle time is the same as time-out. When the synchronization time plus the data bus accessing time is longer than the guard time, the Idle time before a transmission will be more than the expected guard time.

It is recommended to always use the insertion of a minimum of two Guard Time bits on the UPDI side and one guard time cycle insertion from the debugger side.

chanhvinh.com

35.3.3 UPDI Instruction Set

The communication through the UPDI is based on a small instruction set. These instructions are part of the UPDI Data Link (DL) layer. The instructions are used to access the UPDI registers since they are mapped into an internal memory space called “ASI Control and Status (CS) space”, as well as the memory-mapped system space. All instructions are byte instructions and must be preceded by a SYNCH character to determine the baud rate for the communication. See the *UPDI UART* section for information about setting the baud rate for the transmission. Figure 35-6 gives an overview of the UPDI instruction set.

chanhvinh.com

chanhvinh.com

Figure 35-6. UPDI Instruction Set Overview

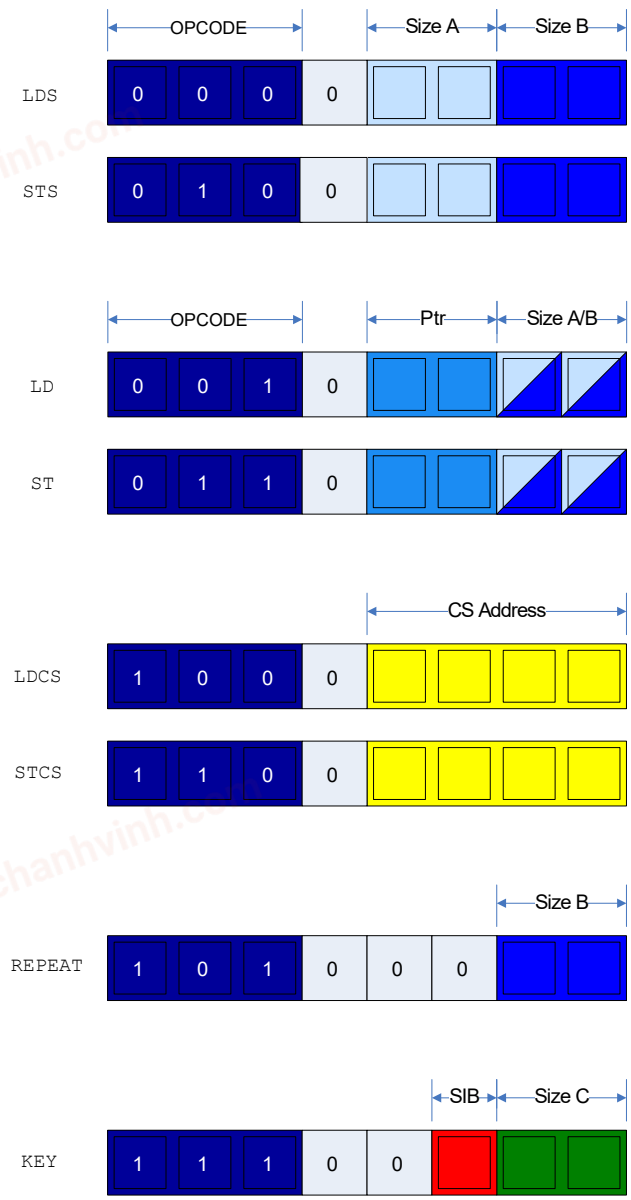

OPCODE			
0	0	0	LDS
0	0	1	LD
0	1	0	STS
0	1	1	ST
1	0	0	LDCS (LDS Control/Status)
1	0	1	REPEAT
1	1	0	STCS (STS Control/Status)
1	1	1	KEY

Size A - Address Size		
0	0	1 Byte - can address 0-255 B
0	1	Word (2 Bytes) - for memories up to 64 KB in size
1	0	3 Bytes - for memories above 64 KB in size
1	1	Reserved

Ptr - Pointer Access		
0	0	*(ptr)
0	1	*(ptr++)
1	0	ptr
1	1	Reserved

Size B - Data Size		
0	0	1 Byte
0	1	Word (2 Bytes)
1	0	Reserved
1	1	Reserved

CS Address (CS - Control/Status reg.)

Size C - Key Size		
0	0	64 bits (8 Bytes)
0	1	128 bits (16 Bytes)
1	0	Reserved
1	1	Reserved

SIB - System Information Block Sel.	
0	Receive KEY
1	Send SIB

35.3.3.1 LDS - Load Data from Data Space Using Direct Addressing

The LDS instruction is used to load data from the system bus into the PHY layer shift register for serial readout. The LDS instruction is based on direct addressing, and the address must be given as an operand to the instruction for the

chanhvinh.com

data transfer to start. The maximum supported size for the address and data is 32 bits. The LDS instruction supports repeated memory access when combined with the REPEAT instruction.

After issuing the LDS instruction, the number of desired address bytes, as indicated by the Size A field followed by the output data size selected by the Size B field, must be transmitted. The output data is issued after the specified Guard Time (GT). When combined with the REPEAT instruction, the address must be sent in for each iteration of the repeat, meaning after each time the output data sampling is done. There is no automatic address increment when using REPEAT with LDS, as it uses a direct addressing protocol.

Figure 35-7. LDS Instruction Operation

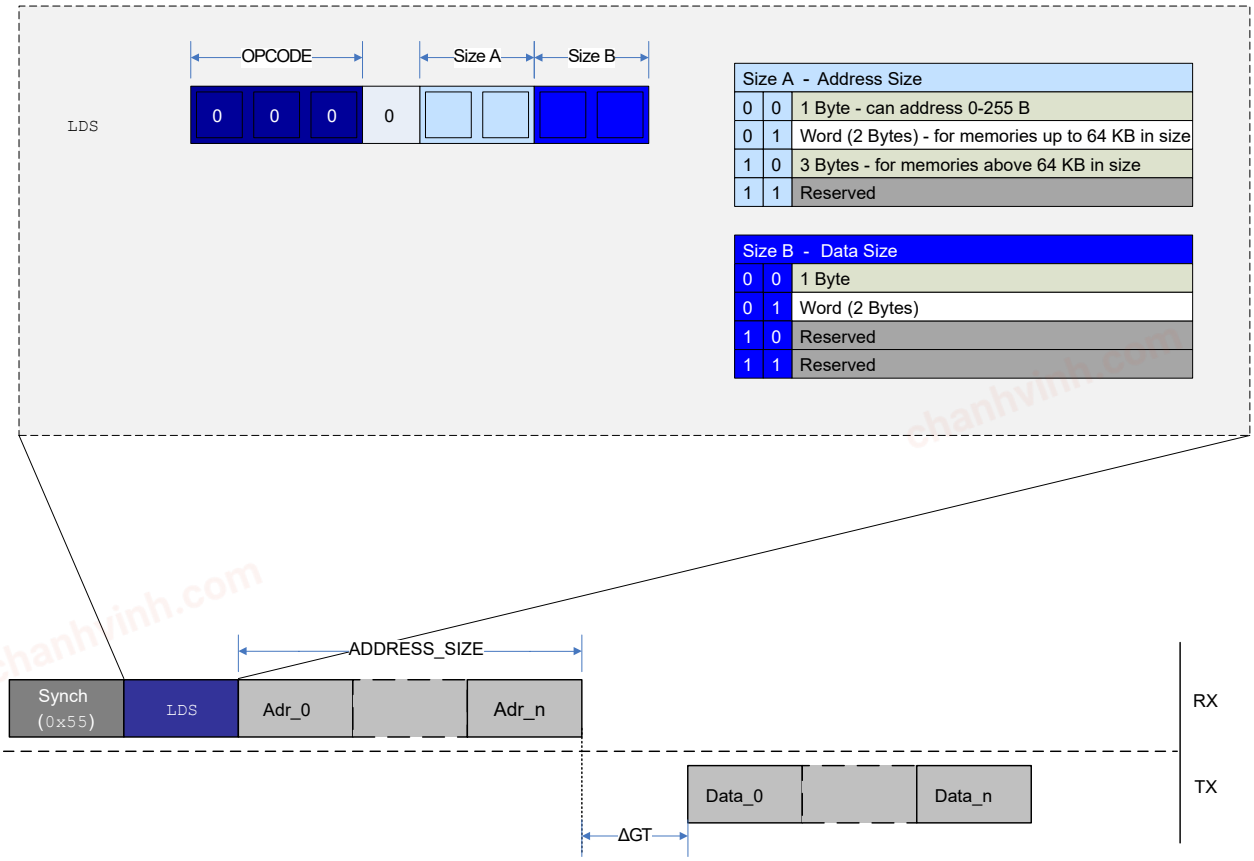

When the instruction is decoded and the address byte(s) are received as dictated by the decoded instruction, the DL layer will synchronize all required information to the ACC layer. This will handle the bus request and synchronize data buffered from the bus back to the DL layer, which will create a synchronization delay that must be taken into consideration upon receiving the data from the UPDI.

35.3.3.2 STS - Store Data to Data Space Using Direct Addressing

The STS instruction is used to store data that are shifted serially into the PHY layer shift register to the system bus address space. The STS instruction is based on direct addressing, and the address must be given as an operand to the instruction for the data transfer to start. The address is the first set of operands, and data are the second set. The size of the address and data operands is given by the size fields presented in Figure 35-8. The maximum size for both address and data is 32 bits.

The STS supports repeated memory access when combined with the REPEAT instruction.

chanhvinh.com

Figure 35-8. `STS` Instruction Operation

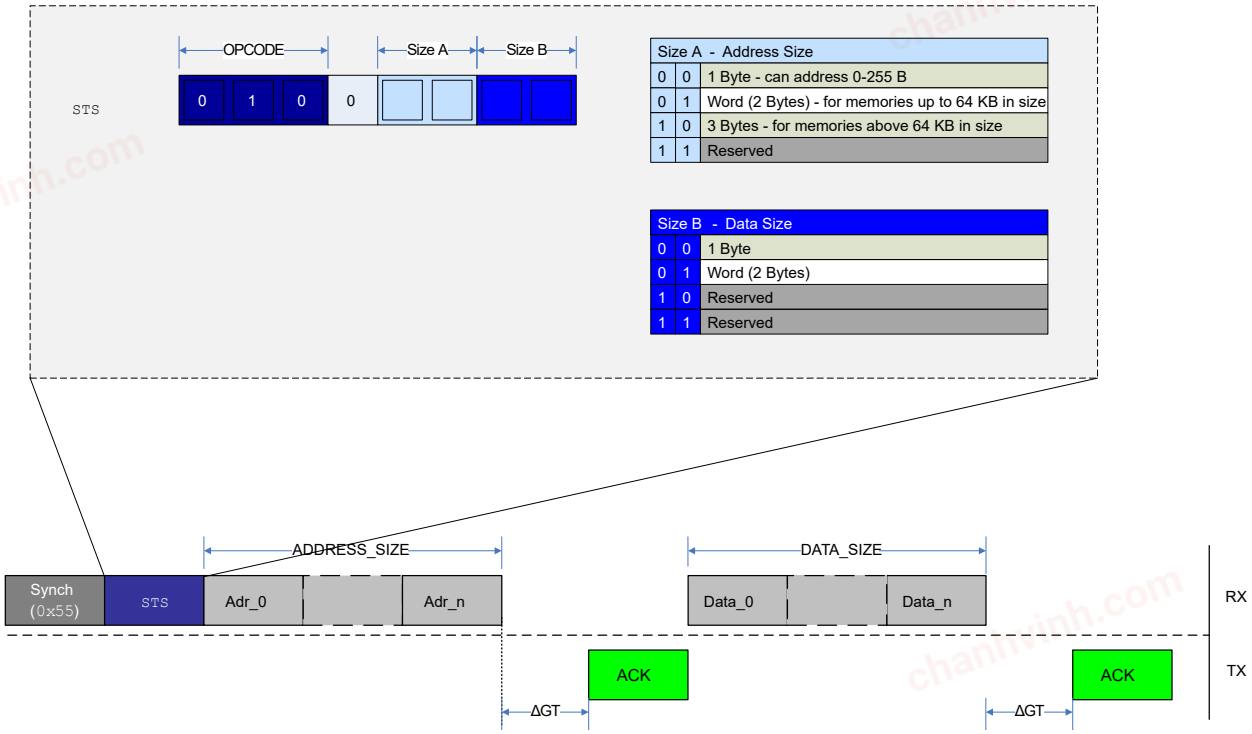

The transfer protocol for an `STS` instruction is depicted in Figure 35-8, following this sequence:

1. The address is sent.
2. An Acknowledge (ACK) is sent back from the UPDI if the transfer was successful.
3. The number of bytes, as specified in the `STS` instruction, is sent.
4. A new ACK is received after the data have been successfully transferred.

35.3.3.3 `LD` - Load Data from Data Space Using Indirect Addressing

The `LD` instruction is used to load data from the data space and into the PHY layer shift register for serial readout. The `LD` instruction is based on indirect addressing, which means that the Address Pointer in the UPDI needs to be written before the data space read access. Automatic pointer post-increment operation is supported and is useful when the `LD` instruction is utilized with the `REPEAT` instruction. It is also possible to do an `LD` from the UPDI Pointer register. The maximum supported size for address and data load is 32 bits.

chanhvinh.com

Figure 35-9. LD Instruction Operation

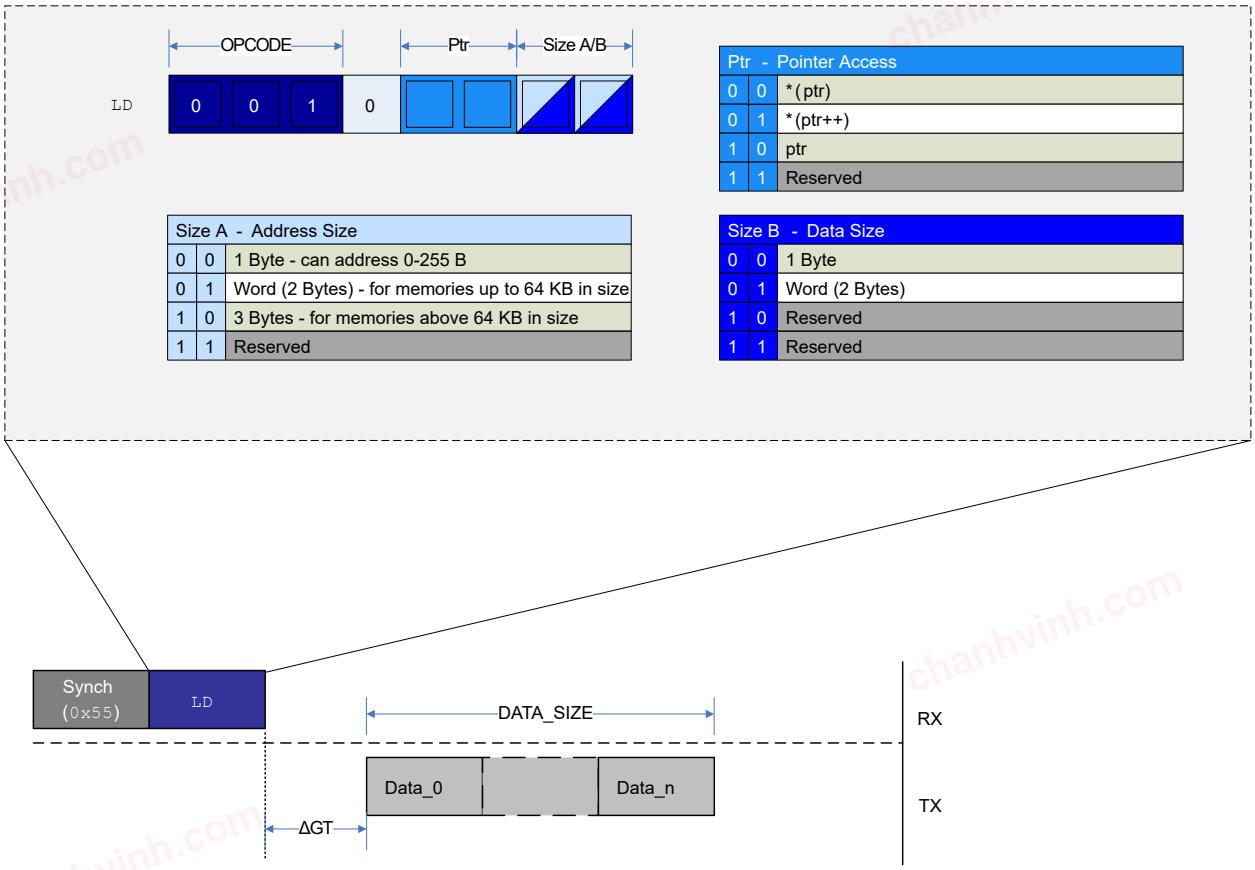

Figure 35-9 shows an example of a typical LD sequence, where the data are received after the Guard Time (GT) period. Loading data from the UPDI Pointer register follows the same transmission protocol.

For the LD instruction from the data space, use an ST instruction to the UPDI Pointer register to set up the Pointer register. Set up the LD instruction with the desired DATA SIZE operands after the ACK has been received on a successful Pointer register write. An LD to the UPDI Pointer register is done directly with the LD instruction.

35.3.3.4 ST - Store Data from UPDI to Data Space Using Indirect Addressing

The ST instruction is used to store data from the UPDI PHY shift register to the data space. The ST instruction is used to store data that are shifted serially into the PHY layer. The ST instruction is based on indirect addressing, which means that the Address Pointer in the UPDI needs to be written before the data space. The automatic pointer post-increment operation is supported and is useful when the ST instruction is utilized with the REPEAT instruction. The ST instruction is also used to store the UPDI Address Pointer into the Pointer register. The maximum supported size for storing address and data is 32 bits.

chanhvinh.com

Figure 35-10. ST Instruction Operation

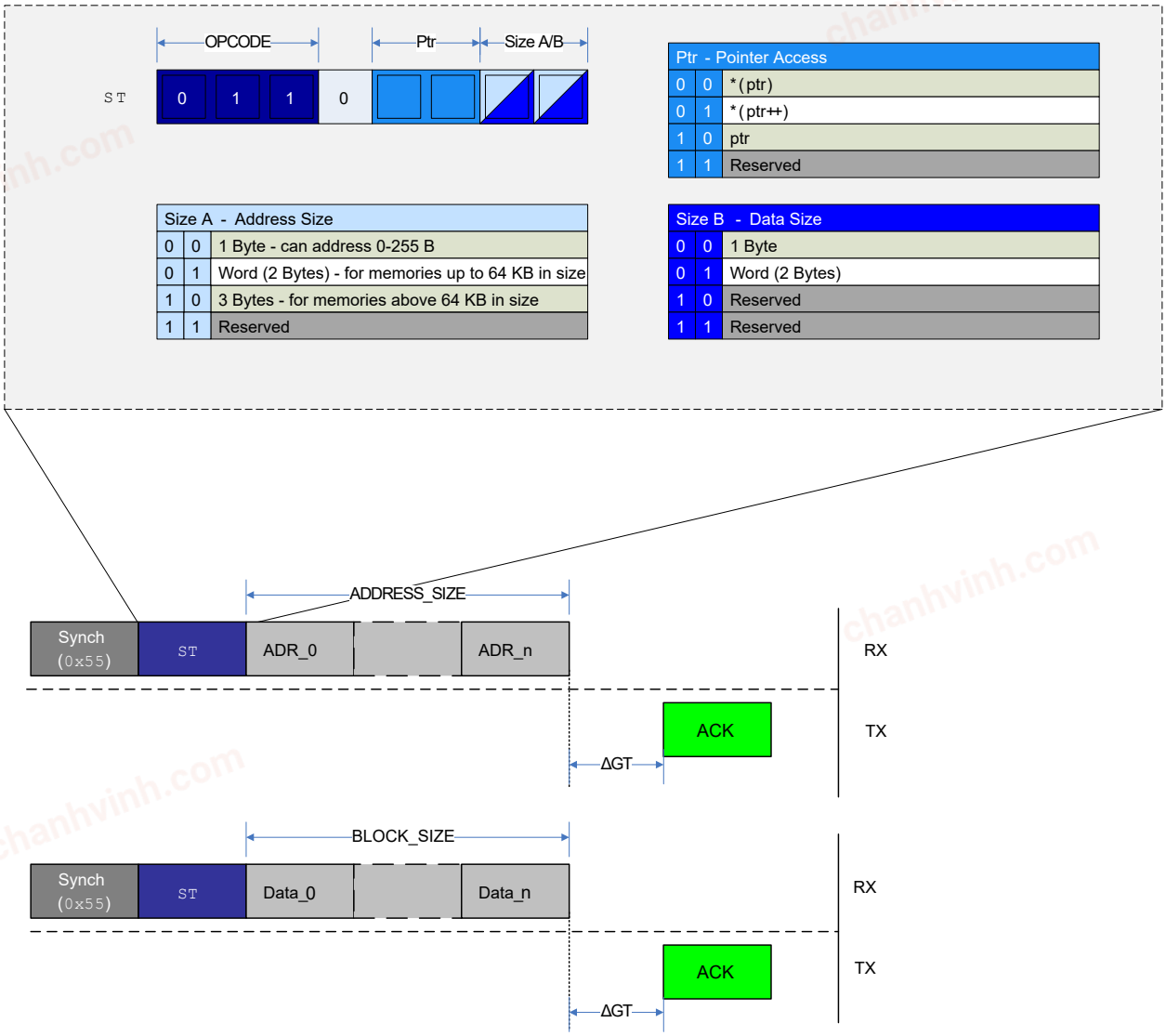

Figure 35-10 gives an example of an ST instruction to the UPDI Pointer register and the storage of regular data. A SYNCH character is sent before each instruction. In both cases, an Acknowledge (ACK) is sent back by the UPDI if the ST instruction was successful.

Follow this procedure to write the UPDI Pointer register:

1. Set the PTR field in the ST instruction to signature 0x2.
2. Set the address size (Size A) field to the desired address size.
3. After issuing the ST instruction, send Size A bytes of address data.
4. Wait for the ACK character, which signifies a successful write to the Address register.

After the Address register is written, sending data is done in a similarly:

1. Set the PTR field in the ST instruction to signature 0x0 to write to the address specified by the UPDI Pointer register. If the PTR field is set to 0x1, the UPDI pointer is automatically updated to the next address according to the data size Size B field of the instruction after the write is executed.
2. Set the Size B field in the instruction to the desired data size.
3. After sending the ST instruction, send Size B bytes of data.
4. Wait for the ACK character, which signifies a successful write to the bus matrix.

chanhvinh.com

When used with the REPEAT instruction, it is recommended to set up the Address register with the start address for the block to be written and use the Pointer Post Increment register to automatically increase the address for each repeat cycle. When using the REPEAT instruction, the data frame of Size B data bytes can be sent after each received ACK.

35.3.3.5 LDCS - Load Data from Control and Status Register Space

The LDCS instruction is used to load serial readout data from the UPDI Control and the Status register space located in the DL layer into the PHY layer shift register. The LDCS instruction is based on direct addressing, where the address is part of the instruction operands. The LDCS instruction can access only the UPDI CS register space. This instruction supports only byte access, and the data size is not configurable.

Figure 35-11. LDCS Instruction Operation

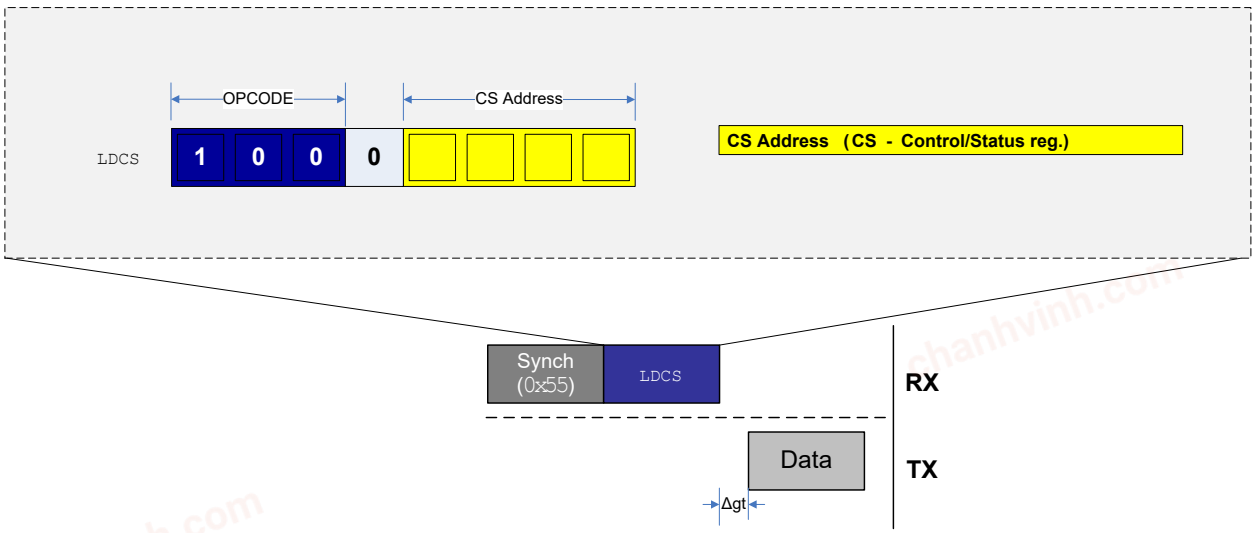

Figure 35-11 shows a typical example of LDCS data transmission. A data byte from the LDCS is transmitted from the UPDI after the guard time is completed.

35.3.3.6 STCS - Store Data to Control and Status Register Space

The STCS instruction is used to store data to the UPDI Control and Status register space. Data are shifted serially into the PHY layer shift register and written as a whole byte to a selected CS register. The STCS instruction is based on direct addressing, where the address is part of the instruction operand. The STCS instruction can access only the internal UPDI register space. This instruction supports only byte access, and the data size is not configurable.

Figure 35-12. STCS Instruction Operation

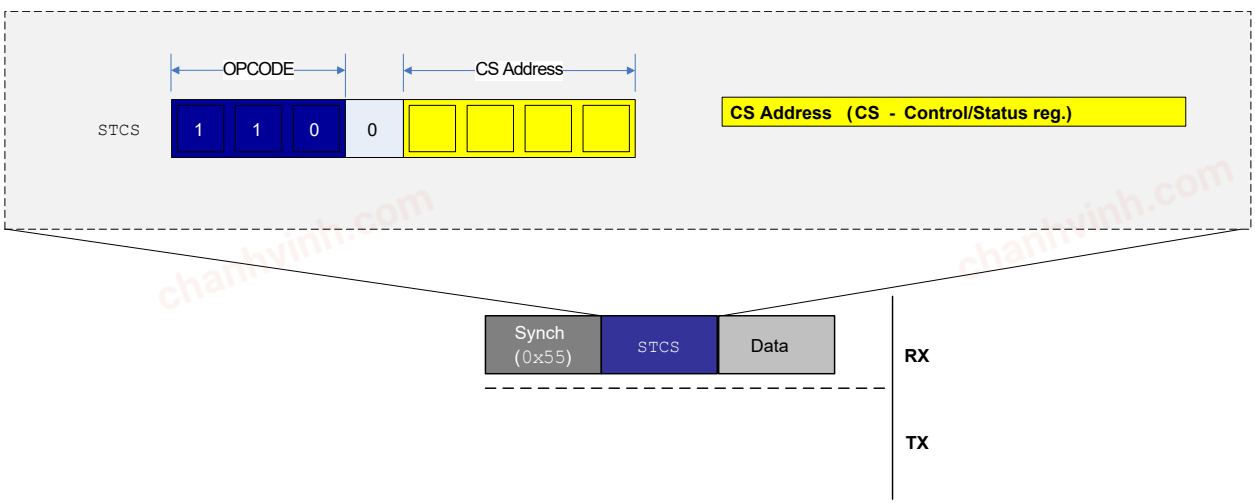

chanhvinh.com

Figure 35-12 shows the data frame transmitted after the SYNCH character and the instruction frames. The STCS instruction byte can immediately be followed by the data byte. There is no response generated from the STCS instruction, as is the case for the ST and STS instructions.

35.3.3.7 REPEAT - Set Instruction Repeat Counter

The REPEAT instruction is used to store the repeat count value into the UPDI Repeat Counter register on the DL layer. When instructions are used with REPEAT, the protocol overhead for SYNCH and instruction frame can be omitted on all instructions except for the first instruction after the REPEAT is issued. REPEAT is most useful for memory instructions (LD, ST, LDS, STS), but all instructions can be repeated, except for the REPEAT instruction itself.

The DATA_SIZE operand field refers to the size of the repeat value. Only up to 255 repeats are supported. The instruction loaded directly after the REPEAT instruction will be issued for RPT_0 + 1 times. If the Repeat Counter register is '0', the instruction will run just once. An ongoing repeat can be aborted only by sending a BREAK character.

Figure 35-13. REPEAT Instruction Operation used with ST Instruction

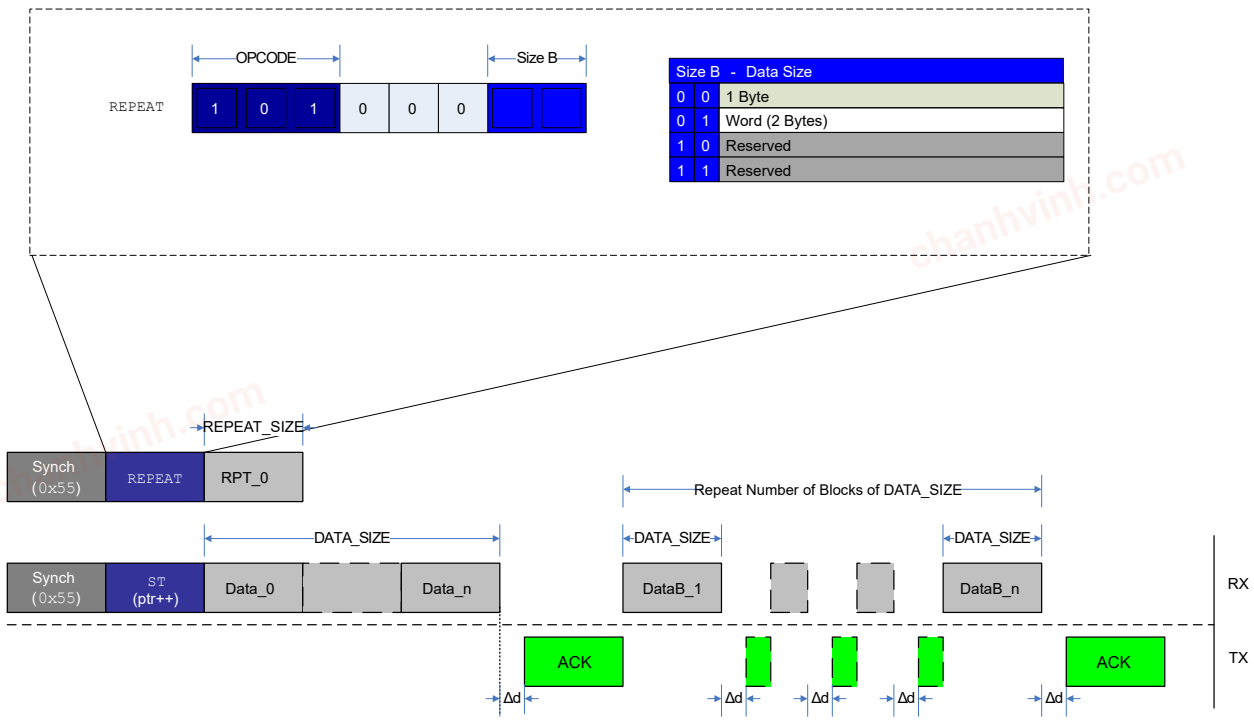

Figure 35-13 gives an example of a repeat operation with an ST instruction using pointer post-increment operation. After the REPEAT instruction is sent with RPT_0 = ***n***, the first ST instruction is issued with SYNCH and instruction frame. The next ***n*** ST instructions are executed by only sending data bytes according to the ST operand DATA_SIZE and maintaining the Acknowledge (ACK) handshake protocol.

chanhvinh.com

Figure 35-14. `REPEAT` used with `LD` Instruction

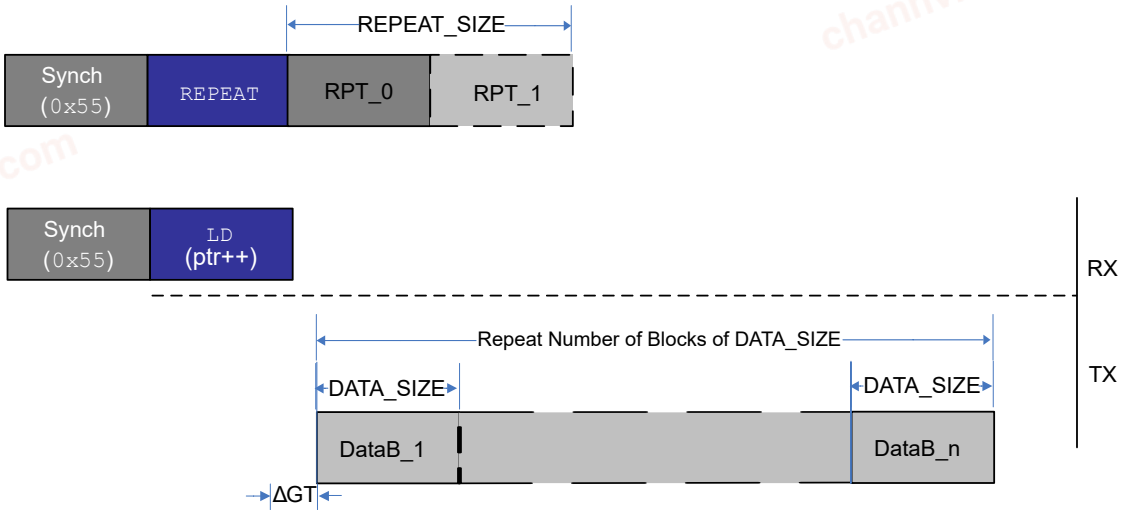

For `LD`, data will come out continuously after the `LD` instruction. Note the guard time on the first data block.

If using indirect addressing instructions (`LD`/`ST`), it is recommended to always use the pointer post-increment option when combined with `REPEAT`. The `ST`/`LD` instruction is necessary only before the first data block (number of data bytes determined by `DATA_SIZE`). Otherwise, the same address will be accessed in all repeated access operations. For direct addressing instructions (`LDS`/`STS`), the address must always be transmitted as specified in the instruction protocol before data can be received (`LDS`) or sent (`STS`).

35.3.3.8 `KEY` - Set Activation Key or Send System Information Block

The `KEY` instruction is used for communicating key bytes to the UPDI or for providing the programmer with a System Information Block (SIB), opening up for executing protected features on the device. See the *Key Activation Overview* table in the *Enabling of Key Protected Interfaces* section for an overview of functions that are activated by keys. For the `KEY` instruction, only a 64-bit key size is supported. The maximum supported size for SIB is 128 bits.

chanhvinh.com

Figure 35-15. KEY Instruction Operation

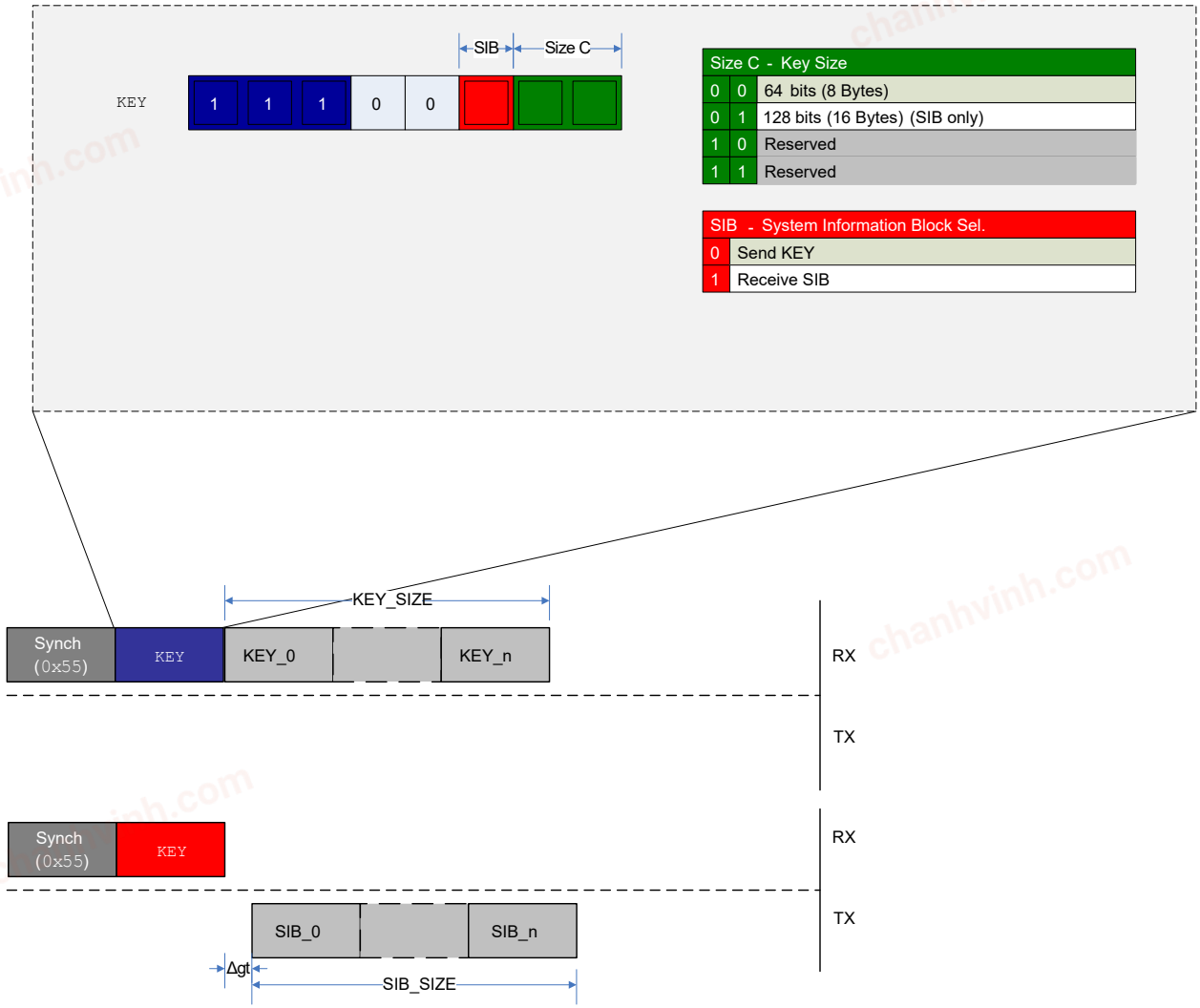

Figure 35-15 shows the transmission of a key and the reception of a SIB. In both cases, the Size C (SIZE_C) field in the operand determines the number of frames being sent or received. There is no response after sending a KEY to the UPDI. When requesting the SIB, data will be transmitted from the UPDI according to the current guard time setting.

35.3.4 CRC Checking of Flash During Boot

Some devices support running a CRC check of the Flash contents as part of the boot process. This check can be performed even when the device is locked. The result of this CRC check can be read from the ASI_CRC_STATUS register. Refer to the *CRCSCAN* section in the device data sheet for more information on this feature.

35.3.5 Inter-Byte Delay

When performing a multibyte transfer (LD combined with REPEAT) or reading out the System Information Block (SIB), the output data will come out in a continuous stream. Depending on the application, the data might come out too fast on the receiver side, and there might not be enough time for the data to be processed before the next Start bit arrives.

The inter-byte delay works by inserting a fixed number of Idle bits for multibyte transfers. The reason for adding an inter-byte delay is that there is no guard time inserted when all data is going in the same direction.

The inter-byte delay feature can be enabled by writing a '1' to the Inter-Byte Delay Enable (IBDLY) bit in the Control A (UPDI.CTRLA) register. As a result, two extra Idle bits will be inserted between each byte to relax the sampling time for the debugger.

chanhvinh.com

Figure 35-16. Inter-Byte Delay Example with `LD` and `RPT`

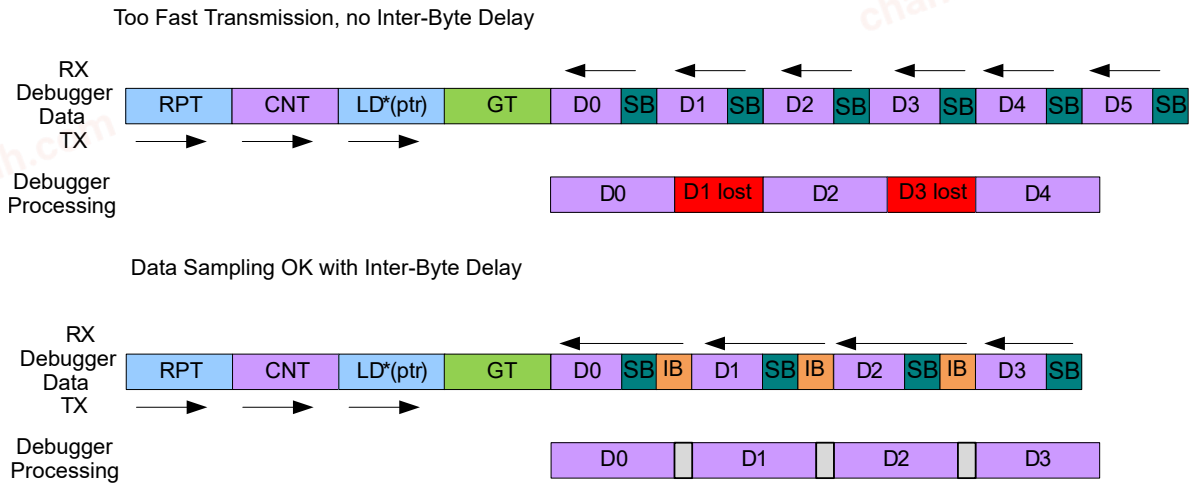

Notes:

1. GT denotes the guard time insertion.
2. SB is for Stop bit.
3. IB is the inserted inter-byte delay.
4. The rest of the frames are data and instructions.

35.3.6 System Information Block

The System Information Block (SIB) can be read out at any time by setting the SIB bit according to the `KEY` instruction from the *KEY - Set Activation Key or Send System Information Block* section. The SIB is always accessible to the debugger, regardless of lock bit settings, and provides a compact form of supplying information about the device and system parameters for the debugger. The information is vital in identifying and setting up the proper communication channel with the device. The output of the SIB is interpreted as ASCII symbols. The key size field must be set to 16 bytes when reading out the complete SIB, and an 8-byte size can be used to read out only the Family_ID. See Figure 35-17 for SIB format description and which data are available at different readout sizes.

Figure 35-17. System Information Block Format

16	8	[Byte][Bits]	Field Name
		[6:0] [55:0]	Family_ID
		[7][7:0]	Reserved
		[10:8][23:0]	NVM_VERSION
		[13:11][23:0]	OCD_VERSION
		[14][7:0]	RESERVED
		[15][7:0]	DBG_OSC_FREQ

35.3.7 Enabling of Key Protected Interfaces

The UPDI key mechanism protects the access to some internal interfaces and features. To activate a key, the correct key data must be transmitted by using the `KEY` instruction, as described in the *KEY - Set Activation Key or Send System Information Block* section. Table 35-5 describes the available keys and the condition required when doing the operation with the key active.

Table 35-5. Key Activation Overview

Key Name	Description	Requirements for Operation	Conditions for Key Invalidation
Chip Erase	Start NVM chip erase. Clear lock bits	-	UPDI Disable/UPDI Reset

chanhvinh.com

.....continued			
Key Name	**Description**	**Requirements for Operation**	**Conditions for Key Invalidation**
NVMPROG	Activate NVM programming	Lock bits cleared. ASI_SYS_STATUS.NVMPROG set	Programming done/UPDI Reset
USERROW-Write	Program the user row on the locked device	Lock bits set. ASI_SYS_STATUS.UROWPROG set	Write to key Status bit/ UPDI Reset

Table 35-6 gives an overview of the available key signatures that must be shifted in to activate the interfaces.

Table 35-6. Key Activation Signatures

Key Name	Key Signature (LSB Written First)	Size
Chip Erase	0x4E564D4572617365	64 bits
NVMPROG	0x4E564D50726F6720	64 bits
USERROW-Write	0x4E564D5573267465	64 bits

35.3.7.1 Chip Erase

Follow these steps to issue a chip erase:

1. Enter the Chip Erase key by using the `KEY` instruction. See the *Key Activation Signatures* table in the *Enabling of Key Protected Interfaces* section for the CHIPERASE signature.
2. **Optional:** Read the Chip Erase (CHIPER) bit in the ASI Key Status (UPDI.ASI_KEY_STATUS) register to see that the key is successfully activated.
3. Write the signature to the Reset Request (RSTREQ) bit in the ASI Reset Request (UPDI.ASI_RESET_REQ) register. This will issue a System Reset.
4. Write `0x00` to the ASI Reset Request (UPDI.ASI_RESET_REQ) register to clear the System Reset.
5. Read the NVM Lock Status (LOCKSTATUS) bit from the ASI System Status (UPDI.ASI_SYS_STATUS) register.
6. The chip erase is done when the LOCKSTATUS bit is '`0`'. If the LOCKSTATUS bit is '`1`', return to step 5.
7. Check the Chip Erase Key Failed (ERASEFAIL) bit in the ASI System Status (UPDI.ASI_SYS_STATUS) register to verify if the chip erase was successful.
8. If the ERASEFAIL bit is '`0`', the chip erase was successful.

After a successful chip erase, the lock bits will be cleared, and the UPDI will have full access to the system. Until the lock bits are cleared, the UPDI cannot access the system bus, and only CS-space operations can be performed.

⚠ CAUTION During chip erase, the BOD is forced in ON state by writing to the Active (ACTIVE) bit field from the Control A (BOD.CTRLA) register and uses the BOD Level (LVL) bit field from the BOD Configuration (FUSE.BODCFG) fuse and the BOD Level (LVL) bit field from the Control B (BOD.CTRLB) register. If the supply voltage V_{DD} is below that threshold level, the device is unavailable until V_{DD} is increased adequately. See the *BOD* section for more details.

35.3.7.2 NVM Programming

If the device is unlocked, it is possible to write directly to the NVM Controller or the Flash memory using the UPDI, which will lead to unpredictable code execution if the CPU is active during the NVM programming. To avoid this, execute the following NVM programming sequence:

1. Follow the chip erase procedure, as described in the *Chip Erase* section. Skip this point if the part is already unlocked.
2. Enter the NVMPROG key by using the `KEY` instruction. See Table 35-6 for the NVMPROG signature.
3. **Optional:** Read the NVM Programming Key Status (NVMPROG) bit from the ASI Key Status (UPDI.KEY_STATUS) register to see if the key has been activated.

chanhvinh.com

4. Write the signature to the Reset Request (RSTREQ) bit in the ASI Reset Request (UPDI.ASI_RESET_REQ) register. This will issue a System Reset.
5. Write 0x00 to the ASI Reset Request (UPDI.ASI_RESET_REQ) register to clear the System Reset.
6. Read the NVM Programming Key Status (NVMPROG) bit from the ASI System Status (UPDI.ASI_SYS_STATUS) register.
7. NVM programming can start when the NVMPROG bit is '1'. If the NVMPROG bit is '0', return to step 6.
8. Write data to NVM through the UPDI.
9. Write the signature to the Reset Request (RSTREQ) bit in the ASI Reset Request (UPDI.ASI_RESET_REQ) register. This will issue a System Reset.
10. Write 0x00 to the ASI Reset Request (UPDI.ASI_RESET_REQ) register to clear the System Reset.
11. Programming is complete.

35.3.7.3 User Row Programming

The user row programming feature allows programming new values to the user row (USERROW) on a locked device. Follow this sequence to program with this functionality enabled:

1. Enter the USERROW-Write key located in Table 35-6 by using the KEY instruction. See Table 35-6 for the USERROW-Write signature.
2. **Optional:** Read the User Row Write Key Status (UROWWRITE) bit from the ASI Key Status (UPDI.ASI_KEY_STATUS) register to see if the key has been activated.
3. Write the signature to the Reset Request (RSTREQ) bit in the ASI Reset Request (UPDI.ASI_RESET_REQ) register. This will issue a System Reset.
4. Write 0x00 to the ASI Reset Request (UPDI.ASI_RESET_REQ) register to clear the System Reset.
5. Read the Start User Row Programming (UROWPROG) bit from the ASI System Status (UPDI.ASI_SYS_STATUS) register.
6. The user row programming can start when the UROWPROG bit is '1'. If UROWPROG is '0', return to step 5.
7. The data to be written to the User Row must first be written to a RAM buffer. The writable area in the RAM has a size of 32 bytes, and it is only possible to write user row data to the first 32 byte addresses of the RAM. Addressing outside this memory range will result in a nonexecuted write. The data will map 1:1 with the user row space when the data is copied into the user row upon completion of the Programming sequence.
8. When all user row data has been written to the RAM, write the User Row Programming Done (UROWDONE) bit in the ASI System Control A (UPDI.ASI_SYS_CTRLA) register.
9. Read the Start User Row Programming (UROWPROG) bit from the ASI System Status (UPDI.ASI_SYS_STATUS) register.
10. The user row programming is completed when the UROWPROG bit is '0'. If the UROWPROG bit is '1', return to step 9.
11. Write to the User Row Write Key Status (UROWWRITE) bit in the ASI Key Status (UPDI.ASI_KEY_STATUS) register.
12. Write the signature to the Reset Request (RSTREQ) bit in the ASI Reset Request (UPDI.ASI_RESET_REQ) register. This will issue a System Reset.
13. Write 0x00 to the ASI Reset Request (UPDI.ASI_RESET_REQ) register to clear the System Reset.
14. The user row programming is complete.

It is not possible to read back data from the RAM in this mode. Only writes to the first 32 bytes of the RAM are allowed.

35.3.8 Events

The UPDI can generate the following events:

chanhvinh.com

Table 35-7. Event Generators in UPDI

Generator Name		Description	Event Type	Generating Clock Domain	Length of Event
Module	Event				
UPDI	SYNCH	SYNCH character	Level	CLK_UPDI	SYNCH char on UPDI pin synchronized to CLK_UPDI

This event is set on the UPDI clock for each detected positive edge in the SYNCH character, and it is not possible to disable this event from the UPDI.

The UPDI has no event users.

Refer to the *Event System* section for more details regarding event types and Event System configuration.

35.3.9 Sleep Mode Operation

The UPDI PHY layer runs independently of all sleep modes, and the UPDI is always accessible for a connected debugger independent of the device's sleep state. If the system enters a sleep mode that turns the system clock off, the UPDI cannot access the system bus and read memories and peripherals. When enabled, the UPDI will request the system clock so that the UPDI always has contact with the rest of the device. Thus, the UPDI PHY layer clock is unaffected by the sleep mode's settings. By reading the System Domain in Sleep (INSLEEP) bit in the ASI System Status (UPDI.ASI_SYS_STATUS) register, it is possible to monitor if the system domain is in a sleep mode.

It is possible to prevent the system clock from stopping when going into a sleep mode by writing to the Request System Clock (CLKREQ) bit in the ASI System Control A (UPDI.ASI_SYS_CTRLA) register. If this bit is set, the system's sleep mode state is emulated, and the UPDI can access the system bus and read the peripheral registers even in the deepest sleep modes.

The CLKREQ bit is by default '1' when the UPDI is enabled, which means that the default operation is keeping the system clock in ON state during the sleep modes.

chanhvinh.com

35.4 Register Summary

Offset	Name	Bit Pos.	7	6	5	4	3	2	1	0
0x00	STATUSA	7:0	UPDIREV[3:0]							
0x01	STATUSB	7:0						PESIG[2:0]		
0x02	CTRLA	7:0	IBDLY		PARD	DTD	RSD	GTVAL[2:0]		
0x03	CTRLB	7:0				NACKDIS	CCDETDIS	UPDIDIS		
0x04 ... 0x06	Reserved									
0x07	ASI_KEY_STATUS	7:0			UROWWRITE	NVMPROG	CHIPER			
0x08	ASI_RESET_REQ	7:0	RSTREQ[7:0]							
0x09	ASI_CTRLA	7:0							UPDICLKSEL[1:0]	
0x0A	ASI_SYS_CTRLA	7:0							UROWDONE	CLKREQ
0x0B	ASI_SYS_STATUS	7:0		ERASEFAIL	SYSRST	INSLEEP	NVMPROG	UROWPROG		LOCKSTATUS
0x0C	ASI_CRC_STATUS	7:0						CRC_STATUS[2:0]		

35.5 Register Description

These registers are readable only through the UPDI with special instructions and are not readable through the CPU.

chanhvinh.com

chanhvinh.com

35.5.1 Status A

Name: STATUSA
Offset: 0x00
Reset: 0x30
Property: -

Bit	7	6	5	4	3	2	1	0
	UPDIREV[3:0]							
Access	R	R	R	R				
Reset	0	0	1	1				

Bits 7:4 – UPDIREV[3:0] UPDI Revision
This bit field contains the revision of the current UPDI implementation.

chanhvinh.com

35.5.2 Status B

Name: STATUSB
Offset: 0x01
Reset: 0x00
Property: -

Bit	7	6	5	4	3	2	1	0
						PESIG[2:0]		
Access						R	R	R
Reset						0	0	0

Bits 2:0 – PESIG[2:0] UPDI Error Signature
This bit field describes the UPDI error signature and is set when an internal UPDI Error condition occurs. The PESIG bit field is cleared on a read from the debugger.

Table 35-8. Valid Error Signatures

PESIG[2:0]	Error Type	Error Description
0x0	No error	No error detected (default)
0x1	Parity error	Wrong sampling of the Parity bit
0x2	Frame error	Wrong sampling of the Stop bits
0x3	Access Layer Time-Out Error	UPDI can get no data or response from the Access layer
0x4	Clock Recovery error	Wrong sampling of the Start bit
0x5	-	Reserved
0x6	Bus error	Address error or access privilege error
0x7	Contention error	Signalize Driving Contention on the UPDI pin

© 2021 Microchip Technology Inc.
and its subsidiaries

chanhvinh.com

35.5.3 Control A

Name: CTRLA
Offset: 0x02
Reset: 0x00
Property: -

Bit	7	6	5	4	3	2	1	0
	IBDLY		PARD	DTD	RSD	GTVAL[2:0]		
Access	R/W		R/W	R/W	R/W	R/W	R/W	R/W
Reset	0		0	0	0	0	0	0

Bit 7 – IBDLY Inter-Byte Delay Enable
Writing a '1' to this bit enables a fixed-length inter-byte delay between each data byte transmitted from the UPDI when doing multibyte LD(S). The fixed length is two IDLE bits.

Bit 5 – PARD Parity Disable
Writing a '1' to this bit will disable the parity detection in the UPDI by ignoring the Parity bit. This feature is recommended to be used only during testing.

Bit 4 – DTD Disable Time-Out Detection
Writing a '1' to this bit will disable the time-out detection on the PHY layer, which requests a response from the ACC layer within a specified time (65536 UPDI clock cycles).

Bit 3 – RSD Response Signature Disable
Writing a '1' to this bit will disable any response signatures generated by the UPDI and reduces the protocol overhead to a minimum when writing large blocks of data to the NVM space. When accessing the system bus, the UPDI may experience delays. If the delay is predictable, the response signature may be disabled. Otherwise, a loss of data may occur.

Bits 2:0 – GTVAL[2:0] Guard Time Value
This bit field selects the guard time value used by the UPDI when the transmission direction switches from RX to TX.

Value	Description
0x0	UPDI guard time: 128 cycles (default)
0x1	UPDI guard time: 64 cycles
0x2	UPDI guard time: 32 cycles
0x3	UPDI guard time: 16 cycles
0x4	UPDI guard time: 8 cycles
0x5	UPDI guard time: 4 cycles
0x6	UPDI guard time: 2 cycles
0x7	Reserved

© 2021 Microchip Technology Inc. and its subsidiaries

chanhvinh.com

35.5.4 Control B

Name: CTRLB
Offset: 0x03
Reset: 0x00
Property: -

Bit	7	6	5	4	3	2	1	0
				NACKDIS	CCDETDIS	UPDIDIS		
Access				R/W	R/W	R/W		
Reset				0	0	0		

Bit 4 – NACKDIS Disable NACK Response
Writing a '1' to this bit disables the NACK signature sent by the UPDI when a System Reset is issued during ongoing LD(S) and ST(S) operations.

Bit 3 – CCDETDIS Collision and Contention Detection Disable
Writing a '1' to this bit disables contention detection. Writing a '0' to this bit enables contention detection.

Bit 2 – UPDIDIS UPDI Disable
Writing a '1' to this bit disables the UPDI PHY interface. The clock request from the UPDI is lowered, and the UPDI is reset. All the UPDI PHY configurations and keys will be reset when the UPDI is disabled.

chanhvinh.com

35.5.5 ASI Key Status

Name: ASI_KEY_STATUS
Offset: 0x07
Reset: 0x00
Property: -

Bit	7	6	5	4	3	2	1	0
			UROWWRITE	NVMPROG	CHIPER			
Access			R/W	R	R			
Reset			0	0	0			

Bit 5 – UROWWRITE User Row Write Key Status
This bit is set to '1' if the UROWWRITE key is successfully decoded. This bit must be written as the final part of the user row write procedure to correctly reset the programming session.

Bit 4 – NVMPROG NVM Programming Key Status
This bit is set to '1' if the NVMPROG key is successfully decoded. The bit is cleared when the NVM programming sequence is initiated, and the NVMPROG bit in ASI_SYS_STATUS is set.

Bit 3 – CHIPER Chip Erase Key Status
This bit is set to '1' if the Chip Erase key is successfully decoded. The bit is cleared by the Reset Request issued as part of the chip erase sequence described in the *Chip Erase* section.

© 2021 Microchip Technology Inc. and its subsidiaries

chanhvinh.com

35.5.6 ASI Reset Request

Name: ASI_RESET_REQ
Offset: 0x08
Reset: 0x00
Property: -

A Reset is signalized to the System when writing the Reset signature to this register.

Bit	7	6	5	4	3	2	1	0
	RSTREQ[7:0]							
Access	R/W	R/W	R/W	R/W	R/W	R/W	R/W	R/W
Reset	0	0	0	0	0	0	0	0

Bits 7:0 – RSTREQ[7:0] Reset Request
The UPDI will not be reset when issuing a System Reset from this register.

Value	Name	Description
0x00	RUN	Clear Reset condition
0x59	RESET	Normal Reset
Other	-	Reserved

chanhvinh.com

35.5.7 ASI Control A

Name: ASI_CTRLA
Offset: 0x09
Reset: 0x03
Property: -

Bit	7	6	5	4	3	2	1	0
							UPDICLKSEL[1:0]	
Access							R/W	R/W
Reset							1	1

Bits 1:0 – UPDICLKSEL[1:0] UPDI Clock Divider Select
Writing these bits selects the UPDI clock output frequency. The default setting after Reset and enable is 4 MHz. See the *Electrical Characteristics* section for more information on possible UPDI oscillator frequencies.

Value	Description
0x0	32 MHz UPDI clock
0x1	16 MHz UPDI clock
0x2	8 MHz UPDI clock
0x3	4 MHz UPDI clock (default setting)

chanhvinh.com

chanhvinh.com

35.5.8 ASI System Control A

Name: ASI_SYS_CTRLA
Offset: 0x0A
Property: -

Bit	7	6	5	4	3	2	1	0
							UROWDONE	CLKREQ
Access							R/W	R/W
Reset							0	0

Bit 1 – UROWDONE User Row Programming Done
Write this bit when the user row data is written to the RAM. Writing a '1' to this bit will start the process of programming the user row data to the Flash.
If this bit is written before the user row data is written to the RAM by the UPDI, the CPU will proceed without the written data.
This bit is writable only if the USERROW-Write key is successfully decoded.

Bit 0 – CLKREQ Request System Clock
If this bit is written to '1', the ASI is requesting the system clock, independent of the system's sleep modes. This makes it possible for the UPDI to access the ACC layer even if the system is in a sleep mode.
Writing a '0' to this bit will lower the clock request.
This bit is set by default when the UPDI is enabled.

chanhvinh.com

35.5.9 ASI System Status

Name: ASI_SYS_STATUS
Offset: 0x0B
Reset: 0x01
Property: -

Bit	7	6	5	4	3	2	1	0
		ERASEFAIL	SYSRST	INSLEEP	NVMPROG	UROWPROG		LOCKSTATUS
Access		R	R	R	R	R		R
Reset		0	0	0	0	0		1

Bit 6 – ERASEFAIL Chip Erase Key Failed
This bit is set to '1' if the chip erase has failed. This bit is set to '0' on Reset. A Reset held from the ASI_RESET_REQ register will also affect this bit.

Bit 5 – SYSRST System Reset Active
When this bit is set to '1', there is an active Reset on the system domain. When this bit is set to '0', the system is not in the Reset state.
This bit is set to '0' on read.
A Reset held from the ASI_RESET_REQ register will also affect this bit.

Bit 4 – INSLEEP System Domain in Sleep
When this bit is set to '1', the system domain is in the Idle or deeper sleep mode. When this bit is set to '0', the system is not in any sleep mode.

Bit 3 – NVMPROG Start NVM Programming
When this bit is set to '1', NVM programming can start from the UPDI.
Reset the system through the UPDI Reset register when the UPDI is done.

Bit 2 – UROWPROG Start User Row Programming
When this bit is set to '1', user row programming can start from the UPDI.
When the User Row data have been written to the RAM, the UROWDONE bit in the ASI_SYS_CTRLA register must be written.

Bit 0 – LOCKSTATUS NVM Lock Status
When this bit is set to '1', the device is locked. If a chip erase is done, and the lock bits are set to '0', this bit will be read as '0'.

© 2021 Microchip Technology Inc.
and its subsidiaries

chanhvinh.com

35.5.10 ASI CRC Status

Name: ASI_CRC_STATUS
Offset: 0x0C
Reset: 0x00
Property: -

Bit	7	6	5	4	3	2	1	0
						CRC_STATUS[2:0]		
Access						R	R	R
Reset						0	0	0

Bits 2:0 – CRC_STATUS[2:0] CRC Execution Status
This bit field signalizes the status of the CRC conversion. This bit field is one-hot encoded.

Value	Description
0x0	Not enabled
0x1	CRC enabled, busy
0x2	CRC enabled, done with OK signature
0x4	CRC enabled, done with FAILED signature
Other	Reserved

© 2021 Microchip Technology Inc. and its subsidiaries

chanhvinh.com

36. Instruction Set Summary

The instruction set summary is part of the *AVR Instruction Set Manual*, located at www.microchip.com/DS40002198. Refer to the CPU version called AVRxt, for details regarding the devices documented in this data sheet.

chanhvinh.com

chanhvinh.com

37. Electrical Characteristics

37.1 Disclaimer

All typical values are measured at T_A = 25°C and V_{DD} = 3.0V unless otherwise specified. All minimum and maximum values are valid across operating temperature and voltage unless otherwise specified.

Typical values given need to be considered for design guidance only, and the part variation around the values is expected.

37.2 Absolute Maximum Ratings

Stresses beyond those listed in this section can cause permanent damage to the device. This is a stress rating only. Functional operation of the device at these or other conditions beyond those indicated in the operational sections of this specification, is not implied. Exposure to absolute maximum rating conditions for extended periods may affect device reliability.

Table 37-1. Absolute Maximum Ratings

Parameter	Condition	Rating	Unit
Ambient temperature under bias		-40 to +125	°C
Storage temperature		-65 to +150	°C
Voltage on pins with respect to GND			
On the V_{DD} pin		-0.3 to +6.5	V
On the $\overline{\text{RESET}}$ pin		-0.3 to (V_{DD} + 0.3)	V
On all other pins		-0.3 to (V_{DD} + 0.3)	V
Maximum current			
On the GND pin(1)	-40°C ≤ T_A ≤ +85°C	350	mA
	+85°C < T_A ≤ +125°C	120	mA
On the V_{DD} pin(1)	-40°C ≤ T_A ≤ +85°C	350	mA
	+85°C < T_A ≤ +125°C	120	mA
On any standard I/O pin		±50	mA
Clamp current, I_K (V_{PIN} < 0 or V_{PIN} > V_{DD})		±20	mA
Total power dissipation(2)		800	mW

Note:

1. The maximum current rating requires even load distribution across I/O pins. The maximum current rating may be limited by the device package power dissipation characterizations. See 37.9 Thermal Specifications to calculate device specifications.
2. Power dissipation is calculated as follows: $P_{DIS} = V_{DD} \times \{I_{DD} - \Sigma I_{OH}\} + \Sigma \{(V_{DD} - V_{OH}) \times I_{OH}\} + \Sigma (V_{OI} \times I_{OL})$

37.3 Standard Operating Conditions

For all other electrical characteristics and typical characteristics of the device to be valid, the device must operate within the ratings listed in this section.

Table 37-2. General Operating Conditions

Operating Voltage	$V_{DDMIN} \le V_{DD} \le V_{DDMAX}$
Operating Temperature	$T_{A_MIN} \le T_A \le T_{A_MAX}$

The standard operating conditions for any device are defined as follows:

© 2021 Microchip Technology Inc. and its subsidiaries

chanhvinh.com

Table 37-3. Standard Operating Conditions

Parameter		Ratings	Units
V_{DD} — Operating Supply Voltage(1)			
Industrial and Extended temperature	V_{DDMIN}	+1.8	V
	V_{DDMAX}	+5.5	V
T_A — Operating Ambient Temperature Range			
Industrial temperature	T_{A_MIN}	-40	°C
	T_{A_MAX}	+85	°C
Extended temperature	T_{A_MIN}	-40	°C
	T_{A_MAX}	+125	°C

Note:
1. Refer to the Supply Voltage parameter in 37.4 Supply Voltage.

37.4 Supply Voltage

Table 37-4. Supply Voltage

Symbol	Min.	Typ. †	Max.	Unit	Conditions
Supply Voltage(1)					
V_{DD}	1.8		5.5	V	
Slew Rate	—	—	0.25	V/µs	$1.8V \le V_{DD} \le 5.5V$
RAM Data Retention(2)					
V_{DR}	1.7	—	—	V	Device in Power-Down mode
Power-on Reset Release Voltage(4)					
V_{POR}	—	1.6	—	V	BOD disabled(3)
t_{POR}	—	1	—	µs	BOD disabled(3)
Power-on Reset Re-Arm Voltage(4)					
V_{PORR}	—	1.25	—	V	BOD disabled(3)
t_{PORR}	—	2.7	—	µs	BOD disabled(3)
V_{DD} Rise Rate to Ensure Internal Power-on Reset Signal(4)					
S_{VDD}	0.05	—	—	V/ms	BOD disabled(3)

† Data in the "Typ." column is at T_A = 25°C and V_{DD} = 3.0V unless otherwise specified. These parameters are for design guidance only and are not tested.

Notes:
1. During Chip Erase, the Brown-out Detector (BOD) configured with BODLEVEL0 is forced ON. If the supply voltage V_{DD} is below V_{BOD} for BODLEVEL0, the erase attempt will fail.
2. This is the limit to which V_{DD} can be lowered in sleep mode without losing RAM data.
3. Refer to 37.11 RST and BOD for BOD trip point information.
4. Refer to Figure 37-1.

© 2021 Microchip Technology Inc. and its subsidiaries

chanhvinh.com

Figure 37-1. $\overline{POR}$ and $\overline{POR}$ Re-Arm with Slow Rising V_{DD}

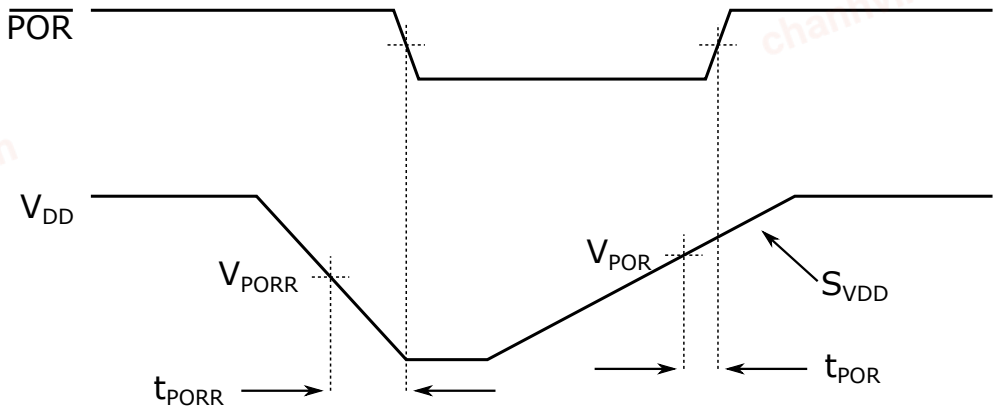

Note: When $\overline{POR}$ is low, the device is held in Reset.

37.5 Power Consumption

Table 37-5. Power Consumption in Active and Idle Mode

Operating conditions: • V_{DD} = 3.0V • T_A = 25°C • System power consumption measured with peripherals disabled and I/O ports driven low with inputs disabled							
Symbol	**Description**	**Min.**	**Typ. †**	**Max. 85°C**	**Max. 125°C**	**Unit**	**Conditions**
I_{DD}	Active power consumption	—	4.4	5.3	5.3	mA	OSCHF = 24 MHz
		—	1.1	1.3	1.3	mA	OSCHF = 4 MHz
		—	6	19	42	µA	OSC32K = 32.768 kHz
		—	4.2	5	5	mA	EXTCLK = 24 MHz
		—	870	1300	1300	µA	EXTCLK = 4 MHz
		—	8.5	25	35	µA	XOSC32K = 32.768 kHz, XOSC32KCTRLA.LPMODE = 0
		—	6.6	25	35	µA	XOSC32K = 32.768 kHz, XOSC32KCTRLA.LPMODE = 1

chanhvinh.com

.....continued

Operating conditions:
- V_{DD} = 3.0V
- T_A = 25°C
- System power consumption measured with peripherals disabled and I/O ports driven low with inputs disabled

Symbol	Description	Min.	Typ. †	Max. 85°C	Max. 125°C	Unit	Conditions
I_{DD_IDLE}	Idle power consumption	—	2.15	2.7	2.7	mA	OSCHF = 24 MHz
		—	620	800	850	µA	OSCHF = 4 MHz
		—	3	19	40	µA	OSC32K = 32.768 kHz
		—	1.9	2.4	2.45	mA	EXTCLK = 24 MHz
		—	460	850	850	µA	EXTCLK = 4 MHz
		—	5.5	22	30	µA	XOSC32K = 32.768 kHz, XOSC32KCTRLA.LPMODE = 0
		—	3.6	22	30	µA	XOSC32K = 32.768 kHz, XOSC32KCTRLA.LPMODE = 1
I_{DD_BASE}	Minimum power consumption in different sleep modes	—	0.65	9	32	µA	Power-Down or Standby mode, all peripherals disabled, VREGCTRL.PMODE = 0 (AUTO)
		—	160	220	240	µA	Power-Down mode, all peripherals disabled, VREGCTRL.PMODE = 1 (FULL)
		—	0.9	6.8	14.1	µA	Power-Down mode, VREGCTRL.PMODE = 0 (AUTO), VREGCTRL.HTLLEN = 1
I_{RST}	Reset power consumption	—	165	220	220	µA	$\overline{\text{RESET}}$ pulled to GND

† Data in the "Typ." column is at T_A = 25°C and V_{DD} = 3.0V unless otherwise specified. These parameters are for design guidance only and are not tested.

37.6 Peripherals Power Consumption

Use the table below to calculate the additional current consumption for the different I/O peripherals in various operating modes. Some peripherals will request the clock to be enabled when operating in STANDBY. Refer to the peripheral section for further information.

chanhvinh.com

Table 37-6. Peripherals Power Consumption(1)

Operating Conditions: • V_{DD} = 3.0V • T_A = 25°C • OSCHF at 4 MHz used as clock source • Device in Standby sleep mode							
Symbol	**Description**	**Min.**	**Typ. †**	**Max. 85°C**	**Max. 125°C**	**Unit**	**Conditions**
I_{DD_WDT}	Watchdog Timer (WDT)	—	600	900	1500	nA	32.768 kHz internal oscillator
I_{DD_VREF}	Voltage Reference (VREF)	—	175	300	320	µA	ADC0REF enabled, V_{REF} = 2.048V
		—	71	90	92	µA	ACREF enabled, V_{REF} = 2.048V
		—	40	60	62	µA	DACREF enabled, V_{REF} = 2.048V
I_{DD_BOD}	Brown-out Detector (BOD)	—	17	25	27	µA	Brown-out Detect (BOD) continuous
		—	1.6	10	12	µA	Brown-out Detect (BOD) sampling @128 Hz, including I_{DD_OSC32K}
		—	0.95	10	12	µA	Brown-out Detect (BOD) sampling @32 Hz, including I_{DD_OSC32K}
I_{DD_TCA}	16-bit Timer/Counter Type A (TCA)	—	6	—	—	µA	CLK_PER = OSCHF/4 = 1 MHz
I_{DD_TCB}	16-bit Timer/Counter Type B (TCB)	—	3.6	—	—	µA	
I_{DD_TCD}	12-bit Timer/Counter Type D (TCD)	—	4.6	—	—	µA	
I_{DD_RTC}	Real-Time Counter (RTC)	—	0.7	18	25.5	µA	RTC running at 1.024 kHz from OSC32K
			3.9	20	26	µA	RTC running at 1.024 kHz from XOSC32K, XOSC32KCTRLA.LPMODE = 0
			2.1	18	25	µA	RTC running at 1.024 kHz from XOSC32K, XOSC32KCTRLA.LPMODE = 1
I_{DD_OSC32K}	32.768 kHz Internal Oscillator (OSC32K)	—	600	900	1500	nA	
$I_{DD_XOSC32K}$	32.768 kHz Crystal Oscillator (XOSC32K)	—	2	—	—	µA	XOSC32KCTRLA.LPMODE = 0
		—	1.2	—	—	µA	XOSC32KCTRLA.LPMODE = 1
I_{DD_OSCHF}	Internal High Frequency Oscillator (OSCHF)	—	185	—	—	µA	OSCHF at 4 MHz
I_{DD_ADC}	Analog-to-Digital Converter (ADC)	—	300	600	650	nA	ADC - Nonconverting
		—	1.1	1.4	1.5	µA	ADC @60 ksps(2)
		—	1.1	1.5	1.6	µA	ADC @120 ksps(2)
I_{DD_AC}	Analog Comparator (AC)	—	70	105	110	µA	CTRLA.POWER = 0x0
		—	17	30	32	µA	CTRLA.POWER = 0x1
		—	12	20	22	µA	CTRLA.POWER = 0x2

© 2021 Microchip Technology Inc.
and its subsidiaries

chanhvinh.com

.....continued

Operating Conditions:

- V_{DD} = 3.0V
- T_A = 25°C
- OSCHF at 4 MHz used as clock source
- Device in Standby sleep mode

Symbol	Description	Min.	Typ. †	Max. 85°C	Max. 125°C	Unit	Conditions
I_{DD_DAC}	Digital-to-Analog Converter (DAC)	—	120	140	160	µA	DAC + DACOUT, $V_{DACREF} = V_{DD}/2$
		—	8	13	34	µA	DAC, $V_{DACREF} = V_{DD}/2$
I_{DD_UART}	Universal Synchronous and Asynchronous Receiver and Transmitter (USART)	—	8.2	—	—	µA	USART Enabled @9600 Baud
I_{DD_SPI}	Serial Peripheral Interface (SPI)	—	4	—	—	µA	SPI Host @100 kHz
I_{DD_TWI}	Two-Wire Interface (TWI)	—	8	—	—	µA	TWI Host @100 kHz
		—	6	—	—	µA	TWI Client @100 kHz
$I_{DD_NVM_ERASE}$	Flash Programming Erase	—	6.8	—	—	mA	
$I_{DD_NVM_WRITE}$	Flash Programming Write	—	9.2	—	—	mA	

† Data in the "Typ." column is at T_A = 25°C and V_{DD} = 3.0V unless otherwise specified. These parameters are for design guidance only and are not tested.

Notes:

1. Current consumption of the module only. To calculate the total internal power consumption of the microcontroller, add the power consumption values of all the peripherals and the clock sources used to the base power consumption given in 37.5 Power Consumption.
2. Average power consumption with ADC active in Free Running mode.

37.7 I/O Pins

Table 37-7. I/O Pin Specifications

Symbol	Description	Min.	Typ. †	Max.	Unit	Conditions
Input Low Voltage						
V_{IL}	I/O PORT:					
	• with Schmitt Trigger buffer	—	—	$0.2 \times V_{DD}$	V	
	• with I^2C levels	—	—	$0.3 \times V_{DD}$	V	
	• with SMBus 3.0 levels	—	—	0.8	V	
	$\overline{\text{RESET}}$ pin	—	—	$0.2 \times V_{DD}$	V	
Input High Voltage						

chanhvinh.com

.....continued						
Symbol	**Description**	**Min.**	**Typ. †**	**Max.**	**Unit**	**Conditions**
V_{IH}	I/O PORT:					
	• with Schmitt Trigger buffer	$0.8 \times V_{DD}$	—	—	V	
	• with I^2C levels	$0.7 \times V_{DD}$	—	—	V	
	• with SMBus 3.0 levels	1.35	—	—	V	$0°C \le T_A \le +125°C$, $2.5V \le V_{DD} \le 5.5V$
		1.45	—	—	V	$0°C \le T_A \le +125°C$, $1.8V \le V_{DD} \le 5.5V$
	$\overline{RESET}$ Pin	$0.8 \times V_{DD}$	—	—	V	
Input Leakage Current(1)						
I_{IL}	I/O PORTS	—	±5	±125	nA	$GND \le V_{PIN} \le V_{DD}$, pin at high-impedance, T_A= 85°C
		—	±5	±1000	nA	$GND \le V_{PIN} \le V_{DD}$, pin at high-impedance, T_A = 125°C
	$\overline{RESET}$ Pin(2)	—	±50	±200	nA	$GND \le V_{PIN} \le V_{DD}$, pin at high-impedance, T_A= 85°C
Pull-up Current						
I_{PUR}		—	150	200	µA	V_{DD} = 3.0V, V_{PIN} = GND
Output Low Voltage						
V_{OL}	Standard I/O ports	—	—	0.6	V	I_{OL} = 10 mA, V_{DD} = 3.0V
Output High Voltage						
V_{OH}	Standard I/O ports	V_{DD}-0.7	—	—	V	I_{OH} = 6 mA, V_{DD} = 3.0V
I/O Slew Rate						
	Rising slew rate	—	45	—	ns	PORTCTRL.SRL = 0x01
	Rising slew rate	—	22	—	ns	PORTCTRL.SRL = 0x00
	Falling slew rate	—	30	—	ns	PORTCTRL.SRL = 0x01
	Falling slew rate	—	16	—	ns	PORTCTRL.SRL = 0x00
Pin Capacitance						
C_{IO}	All I/O pins	—	5	—	pF	

† Data in the "Typ." column is at T_A = 25°C and V_{DD} = 3.0V unless otherwise specified. These parameters are for design guidance only and are not tested.

Notes:

1. The negative current is defined as the current sourced by the pin.
2. The leakage current on the $\overline{RESET}$ pin is strongly dependent on the applied voltage level. The specified levels represent normal operating conditions. A higher leakage current may be measured at different input voltages.

37.8 Memory Programming Specifications

Table 37-8. Memory Programming Specifications

Symbol	Description	Min.	Typ. †	Max.	Unit	Conditions
Data EEPROM Memory Specifications						

chanhvinh.com

.....continued

Symbol	Description	Min.	Typ. †	Max.	Unit	Conditions
E_D*	Data EEPROM byte endurance	100k	—	—	Erase/Write cycles	-40°C ≤ T_A ≤ +85°C
t_{D_RET}	Characteristic retention	—	40	—	Year	Provided no other violated specifications
V_{D_RW}	V_{DD} for Read or Erase/Write operation	V_{DDMIN}	—	V_{DDMAX}	V	
N_{D_REF}*	Total Erase/Write cycles before refresh	1M	4M	—	Erase/Write cycles	-40°C ≤ T_A ≤ +85°C
t_{D_CE}	Byte/Multibyte/Full EEPROM Erase time	—	10	10.5	ms	
t_{D_WRE}	Byte Write time	—	70	75	µs	
t_{D_BEW}	Byte Erase and Write time	—	10.07	—	ms	
Program Flash Memory Specifications						
E_P*	Flash memory cell endurance	10k	—	—	Erase/Write cycles	
t_{P_RET}	Characteristic retention	—	40	—	Year	
V_{P_RD}	V_{DD} for Read operation	V_{DDMIN}	—	V_{DDMAX}	V	
V_{P_REW}	V_{DD} for Erase/Write operation	V_{DD}(1)	—	V_{DDMAX}	V	
t_{P_CE}	Chip Erase time	—	11	11.6	ms	
t_{P_PE}	Page Erase time	—	10	10.5	ms	
t_{P_WRD}	Byte/Word Write time	—	70	75	µs	

† Data in the “Typ.” column is at T_A = 25°C and V_{DD} = 3.0V unless otherwise specified. These parameters are for design guidance only and are not tested.

* These parameters are characterized but not tested in production.

Note:

1. During Chip Erase, the Brown-out Detector (BOD) configured with BODLEVEL0 is forced ON. If the supply voltage V_{DD} is below V_{BOD} for BODLEVEL0, the erase attempt will fail.

chanhvinh.com

37.9 Thermal Specifications

Table 37-9. Thermal Specifications

Symbol	Description	Typ.	Unit	Conditions
θ_{JA}	Thermal Resistance Junction to Ambient	60	°C/W	28-pin PDIP package (SP)
		47	°C/W	28-pin SOIC package (SO)
		67.1	°C/W	28-pin SSOP package (SS)
		36.1	°C/W	32-pin VQFN package (RXB)
		58.8	°C/W	32-pin TQFP package (PT)
		33.7	°C/W	48-pin VQFN package (6LX)
		55.6	°C/W	48-pin TQFP package (PT)
		30.2	°C/W	64-pin VQFN package (MR)
		38.7	°C/W	64-pin TQFP package (PT)
T_{JMAX}	Maximum Junction Temperature	150	°C	

Notes:

1. Power dissipation is calculated as follows:
   $P_{DIS} = V_{DD} \times \{I_{DD} - \Sigma I_{OH}\} + \Sigma \{(V_{DD} - V_{OH}) \times I_{OH}\} + \Sigma (V_{OI} \times I_{OL})$
2. Internal Power Dissipation is calculated as follows: $P_{INTERNAL} = I_{DD} \times V_{DD}$, where I_{DD} is current to run the chip alone without driving any load on the output pins.
3. Derated Power is calculated as follows: $P_{DER} = PD_{MAX}\ (T_J\text{-}T_A)/\theta_{JA}$, where T_A = Ambient Temperature, T_J = Junction Temperature.

37.10 CLKCTRL

37.10.1 Internal Oscillators

Table 37-10. Internal Oscillators Specifications(1)

Symbol	Description	Min.	Typ. †	Max.	Unit	Conditions
f_{OSCHF}	OSCHF frequency	—	1(2) 2(2) 3(2)	—	MHz	
	Precision calibrated OSCHF frequency	—	4 8 12 16 20 24	—		
$\%_{CAL}$	OSCHF tune step size	—	0.4	—	%	

chanhvinh.com

.....continued						
Symbol	**Description**	**Min.**	**Typ. †**	**Max.**	**Unit**	**Conditions**
t_{OSCHF_ST}(3)	OSCHF wake-up from sleep start-up time	—	24	30	µs	Device in Idle or Standby sleep mode, VREGCTRL.PMODE = FULL
		—	115	180	µs	Device in Power-Down sleep mode, VREGCTRL.PMODE = AUTO
f_{OSC32K}	Internal OSC32K frequency	—	32.768	—	kHz	
t_{OSC32K_ST} (3)	OSC32K wake-up from sleep start-up time	—	950	1000	µs	Device in Power-Down sleep mode, VREGCTRL.PMODE = AUTO

† Data in the "Typ." column is at T_A = 25°C and V_{DD} = 3.0V unless otherwise specified. These parameters are for design guidance only and are not tested.

Notes:

1. To ensure these oscillator frequency tolerances, V_{DD} and GND must be capacitively decoupled as close to the device as possible. 100 nF and 0.1 µF values in parallel are recommended.
2. These parameters are not calibrated.
3. Wake-up times are measured from the wake-up event to code execution.

Figure 37-2. Precision Calibrated OSCHF (4 MHz) and OSC32K Frequency Accuracy Over Device V_{DD} and Temperature(1)

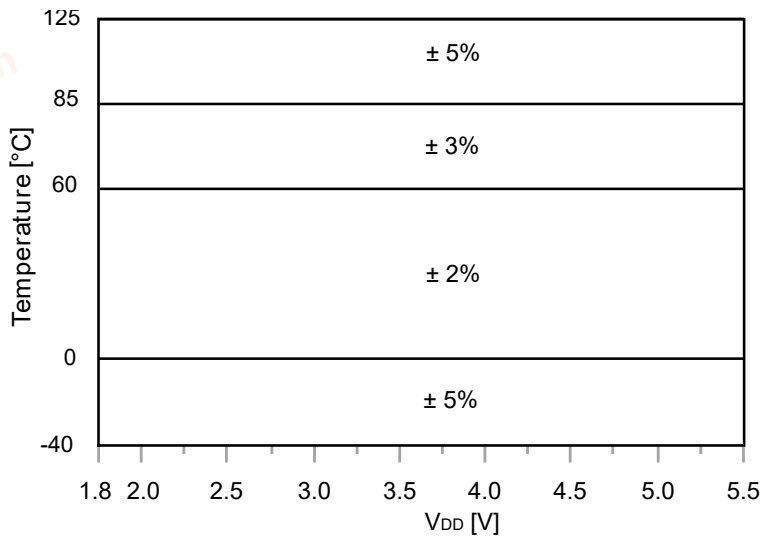

Note: The f_{OSCHF} precision calibrated frequency is tested at -40°C, 25°C, 85°C, and 125°C.

37.10.2 XOSC32K

Table 37-11. 32.768 kHz Crystal Oscillator (XOSC32K) Specifications

Symbol	**Description**	**Min.**	**Typ. †**	**Max.**	**Unit**	**Conditions**
f_{XOSC32}	Frequency	—	32.768	—	kHz	
$C_{XTAL1/XTAL2}$ *	Parastatic pin capacitance	—	5	—	pF	
C_L *	Crystal load capacitance		18	—	pF	XOSC32KCTRLA.LPMODE = 0
		—	8	—	pF	XOSC32KCTRLA.LPMODE = 1

chanhvinh.com

.....continued						
Symbol	**Description**	**Min.**	**Typ. †**	**Max.**	**Unit**	**Conditions**
ESR *	Equivalent Series Resistance	—	—	100	kΩ	XOSC32KCTRLA.LPMODE = 0
		—	—	50	kΩ	XOSC32KCTRLA.LPMODE = 1
t_{XOSC32_ST} *	XOSC32 start-up time	—	200	—	ms	XOSC32KCTRLA.LPMODE = 0
		—	1000	—	ms	XOSC32KCTRLA.LPMODE = 1

† Data in the "Typ." column is at T_A = 25°C and V_{DD} = 3.0V unless otherwise specified. These parameters are for design guidance only and are not tested.

* These parameters are characterized but not tested in production.

37.10.3 External Clock

Figure 37-3. External Clock Waveform

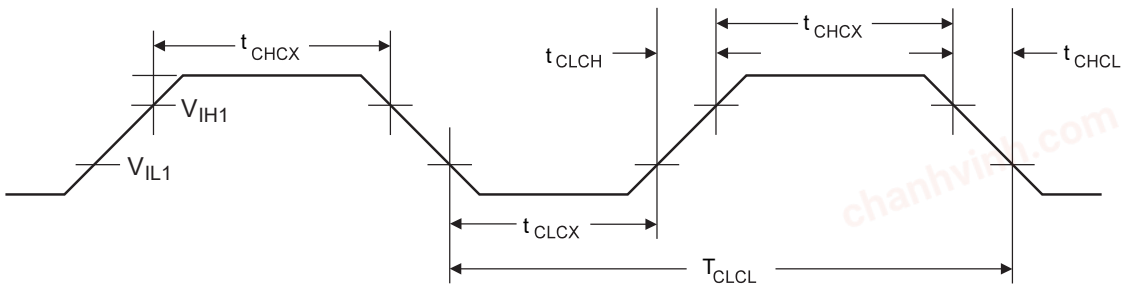

Table 37-12. External Clock Specifications

Symbol	Description	Min.	Typ. †	Max.	Unit	Conditions
f_{CLCL}	Clock frequency	—	—	24	MHz	
T_{CLCL}	Clock period	41.6	—	—	ns	
t_{CHCX}	High time	—	40	—	%	
t_{CLCX}	Low time	—	40	—	%	
ΔT_{CLCL}	Change in period from cycle to cycle time	—	20	—	%	

† Data in the "Typ." column is at T_A = 25°C and V_{DD} = 3.0V unless otherwise specified. These parameters are for design guidance only and are not tested.

37.10.4 PLL

Table 37-13. PLL Specifications

Symbol	Description	Min.	Typ. †	Max.	Unit	Conditions
f_{PLLIN}	PLL input frequency range	16	—	24	MHz	
f_{PLLOUT}	PLL output frequency range	32	—	48	MHz	
t_{PLLST}	PLL lock time	—	10	—	µs	

† Data in the "Typ." column is at T_A = 25°C and V_{DD} = 3.0V unless otherwise specified. These parameters are for design guidance only and are not tested.

© 2021 Microchip Technology Inc. and its subsidiaries

chanhvinh.com

37.10.5 System Clock

Table 37-14. System Clock Timing Characteristics

Symbol	Description	Min.	Typ. †	Max.	Unit	Conditions
f_{CLK_MAIN}	Main clock frequency(1,2)	—	—	24	MHz	
f_{CY}	Instruction clock frequency	—	f_{CLK_MAIN}	—	MHz	
T_{CY}	Instruction period(3)	41.6	$1/f_{CY}$	—	ns	

† Data in the "Typ." column is at T_A = 25°C and V_{DD} = 3.0V unless otherwise specified. These parameters are for design guidance only and are not tested.

Notes:

1. The main clock frequency (CLK_MAIN) is configured by the Clock Select (CLKSEL) bit field, as described in the *CLKCTRL - Clock Controller* section.
2. The main clock frequency (CLK_MAIN) must meet the voltage requirements defined in 37.3 Standard Operating Conditions.
3. Instruction Cycle Period (T_{CY}) is equal to the input oscillator time base period. All specified values are based on characterization data for that particular oscillator type, under standard operating conditions with the device executing code. Exceeding these specified limits may result in incorrect code execution and/or higher than expected current consumption. All devices are tested to operate at 'min' values with an external clock applied to the EXTCLK pin. When an external clock input is used, the 'max' cycle time limit is 'DC' (no clock) for all devices.

37.11 RST and BOD

Table 37-15. Reset, WDT, Oscillator Start-up Timer, Power-up Timer, Brown-out Detector Specifications

Symbol	Description	Min.	Typ. †	Max.	Unit	Conditions
t_{RST} *	$\overline{\text{RESET}}$ pin pulse-width low to ensure a Reset	2.5	—	—	µs	
R_{RST_UP} *	$\overline{\text{RESET}}$ pin pull-up resistor	—	35	—	kΩ	
T_{WDT} *	Watchdog Timer time-out period	—	500	—	ms	1:512 Prescaler
T_{SUT} *	Power-up timer period	—	64	—	ms	SUT = 0x07
T_{OST} *	Oscillator start-up timer period(1)	—	1024	—	cycles	
V_{BOD}	Brown-out Detect Voltage(2)	1.8	1.9	2.1	V	BODLEVEL0
		2.3	2.45	2.6	V	BODLEVEL1
		2.55	2.7	2.85	V	BODLEVEL2
		2.7	2.85	3	V	BODLEVEL3
V_{BOD_HYS}	Brown-out Detect hysteresis	—	44	—	mV	
t_{BOD_ST}	Brown-out Detect start-up time	—	1.9	—	µs	
t_{BOD_128HZ}	BOD Response Time Sampling mode @128 Hz	—	7.81	—	ms	SAMPFREQ = 0
t_{BOD_32HZ}	BOD Response Time Sampling mode @32 Hz	—	31.25	—	ms	SAMPFREQ = 1
t_{BOD_RST}	Brown-out Reset response time	—	3	—	µs	

† Data in the "Typ." column is at T_A = 25°C and V_{DD} = 3.0V unless otherwise specified. These parameters are for design guidance only and are not tested.

* These parameters are characterized but not tested in production.

Notes:

1. By design, the Oscillator Start-up Timer (T_{OST}) counts the first 1024 cycles, independent of frequency.
2. To ensure these voltage tolerances, V_{DD} and GND must be capacitively decoupled as close to the device as possible. Values 0.1 µF and 0.01 µF are recommended in parallel.

chanhvinh.com

Table 37-16. Voltage Level Monitor Threshold Specifications

Symbol	Description	Min.	Typ. †	Max.	Unit	Conditions
V_{DET} *	Voltage detection threshold	1	5	10	% of BOD threshold	VLMLVL = 0x01
		9	15	22		VLMLVL = 0x02
		19	25	32		VLMLVL = 0x03

† Data in the "Typ." column is at T_A = 25°C and V_{DD} = 3.0V unless otherwise specified. These parameters are for design guidance only and are not tested.

* These parameters are characterized but not tested in production.

37.12 V_{REF}

Table 37-17. V_{REF} Specifications

Symbol	Description	Min.	Typ. †	Max.	Unit	Conditions
V_{VREF_1V024}(1)	Internal Voltage Reference 1.024V	-4	—	3	%	V_{DD} ≥ 2.5V, -40°C ≤ TA ≤ +85°C
V_{VREF_2V048}(1)	Internal Voltage Reference 2.048V	-4	—	3	%	V_{DD} ≥ 2.5V, -40°C ≤ TA ≤ +85°C
V_{VREF_4V096}(1)	Internal Voltage Reference 4.096V	-4	—	3	%	V_{DD} ≥ 4.55V, -40°C ≤ TA ≤ +85°C
V_{VREF_2V500}(1)	Internal Voltage Reference 2.5V	-4	—	3	%	V_{DD} ≥ 2.7V, -40°C ≤ TA ≤ +85°C
V_{VREFA}	VREFA input pin voltage	1.8	—	V_{DD}	V	V_{DD} < 2.7V
		1.024	—	V_{DD}	V	V_{DD} ≥ 2.7V
t_{INTREF} *	Delay for changing voltage reference	—	2	—	µs	
t_{VREF_ST} *	VREF Start-up Time	—	10	—	µs	CLKCTRL.MCLKCTRLA = 0x00 or 0x03
		—	200	—	µs	CLKCTRL.MCLKCTRLA = 0x01 or 0x02

† Data in the "Typ." column is at T_A = 25°C and V_{DD} = 3.0V unless otherwise specified. These parameters are for design guidance only and are not tested.

* These parameters are characterized but not tested in production.

Note:

1. The symbol V_{VREF_xVxxx} refers to the respective values of the REFSEL bit fields in the VREF.ADC0REF, VREF.DAC0REF, and VREF.ACREF registers.

chanhvinh.com

37.13 USART

Figure 37-4. USART in SPI Mode - Timing Requirements in Host Mode

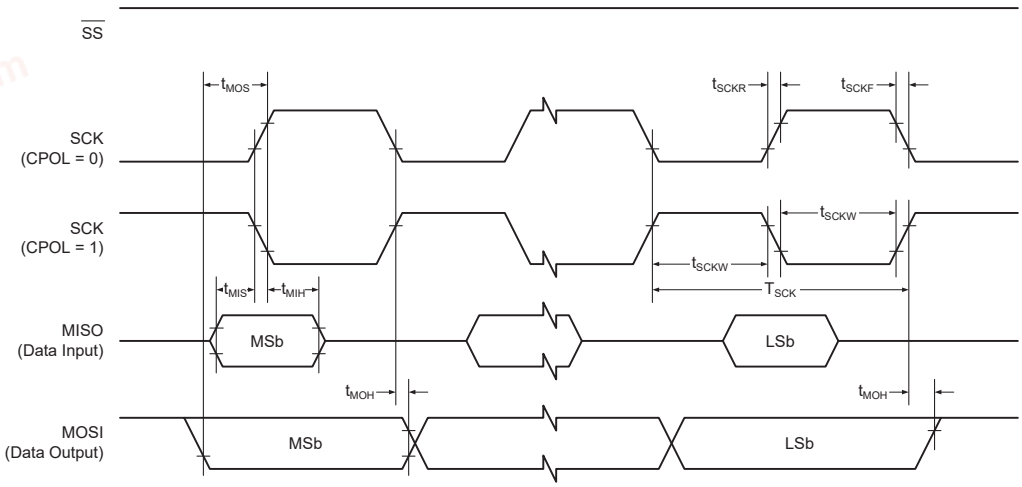

Table 37-18. USART in SPI Host Mode - Timing Specifications

Symbol	Description	Min.	Typ. †	Max.	Unit	Condition
f_{SCK} *	SCK clock frequency	—	—	10	MHz	
T_{SCK} *	SCK period	100	—	—	ns	
t_{SCKW}	SCK high/low width	—	$0.5 \times T_{SCK}$	—	ns	
t_{SCKR}	SCK rise time	—	2.7	—	ns	
t_{SCKF}	SCK fall time	—	2.7	—	ns	
t_{MIS}	MISO setup to SCK	—	10	—	ns	
t_{MIH}	MISO hold after SCK	—	10	—	ns	
t_{MOS}	MOSI setup to SCK	—	$0.5 \times T_{SCK}$	—	ns	
t_{MOH}	MOSI hold after SCK	—	1.0	—	ns	

† Data in the "Typ." column is at T_A = 25°C and V_{DD} = 3.0V unless otherwise specified. These parameters are for design guidance only and are not tested.

* These parameters are characterized but not tested in production.

chanhvinh.com

37.14 SPI

Figure 37-5. SPI - Timing Requirements in Host Mode

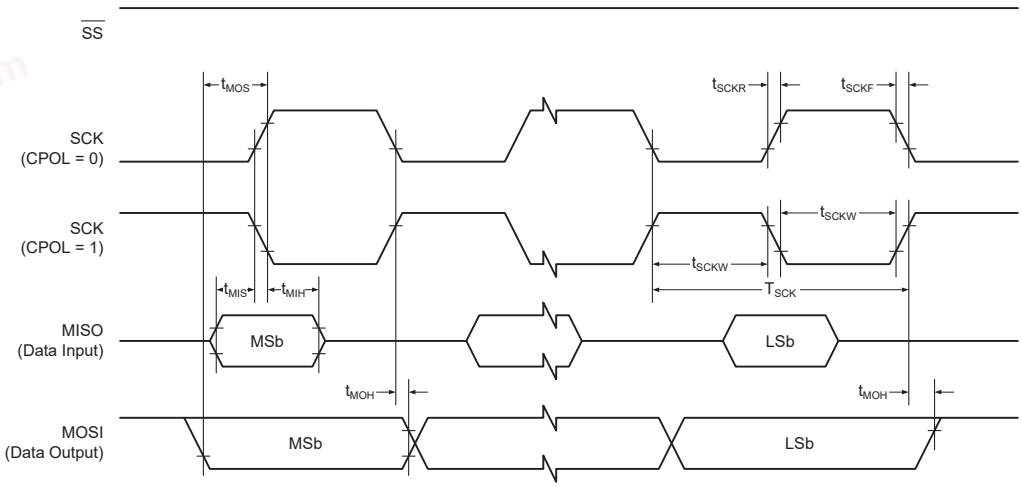

Table 37-19. SPI - Timing Specifications in Host Mode

Symbol	Description	Min.	Typ. †	Max.	Unit	Condition
f_{SCK} *	SCK clock frequency	—	—	10	MHz	
T_{SCK} *	SCK period	100	—	—	ns	
t_{SCKW}	SCK high/low width	—	$0.5 \times T_{SCK}$	—	ns	
t_{SCKR}	SCK rise time	—	2.7	—	ns	
t_{SCKF}	SCK fall time	—	2.7	—	ns	
t_{MIS}	MISO setup to SCK	—	10	—	ns	
t_{MIH}	MISO hold after SCK	—	10	—	ns	
t_{MOS}	MOSI setup to SCK	—	$0.5 \times T_{SCK}$	—	ns	
t_{MOH}	MOSI hold after SCK	—	1.0	—	ns	

† Data in the “Typ.” column is at T_A = 25°C and V_{DD} = 3.0V unless otherwise specified. These parameters are for design guidance only and are not tested.

* These parameters are characterized but not tested in production.

chanhvinh.com

Figure 37-6. SPI - Timing Requirements in Client Mode

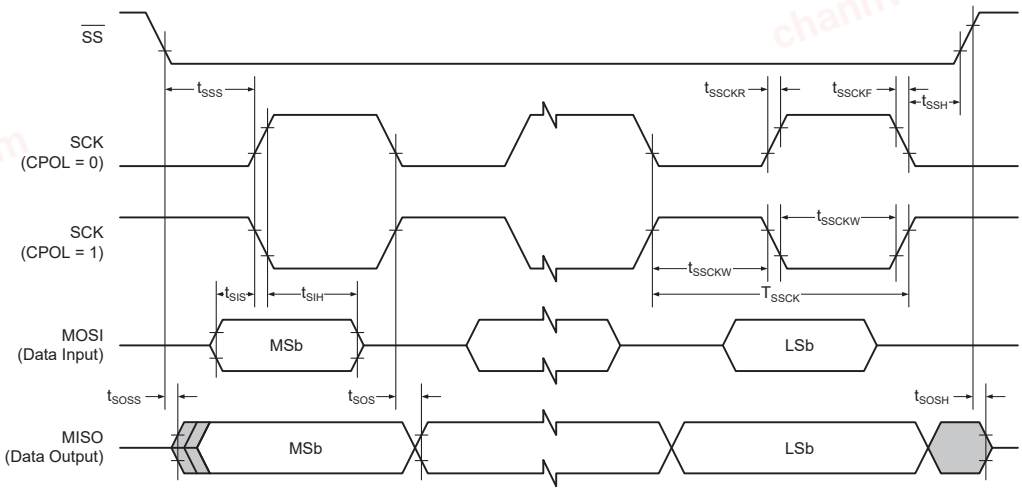

Table 37-20. SPI - Timing Specifications in Client Mode

Symbol	Description	Min.	Typ. †	Max.	Unit	Condition
f_{SSCK} *	Client SCK clock frequency	—	—	5	MHz	
T_{SSCK} *	Client SCK period	$4 \times T_{CLK_PER}$	—	—	ns	
t_{SSCKW} *	SCK high/low width	$2 \times T_{CLK_PER}$	—	—	ns	
t_{SSCKR} *	SCK rise time	—	—	1600	ns	
t_{SSCKF} *	SCK fall time	—	—	1600	ns	
t_{SIS} *	MOSI setup to SCK	3.0	—	—	ns	
t_{SIH} *	MOSI hold after SCK	T_{CLK_PER}	—	—	ns	
t_{SSS} *	SS setup to SCK	21	—	—	ns	
t_{SSH} *	SS hold after SCK	20	—	—	ns	
t_{SOS}	MISO setup to SCK	—	8.0	—	ns	
t_{SOH}	MISO hold after SCK	—	13	—	ns	
t_{SOSS}	MISO setup after SS low	—	11	—	ns	
t_{SOSH}	MISO hold after SS low	—	8.0	—	ns	

† Data in the “Typ.” column is at T_A = 25°C and V_{DD} = 3.0V unless otherwise specified. These parameters are for design guidance only and are not tested.

* These parameters are characterized but not tested in production.

chanhvinh.com

37.15 TWI

Figure 37-7. TWI - Timing Requirements

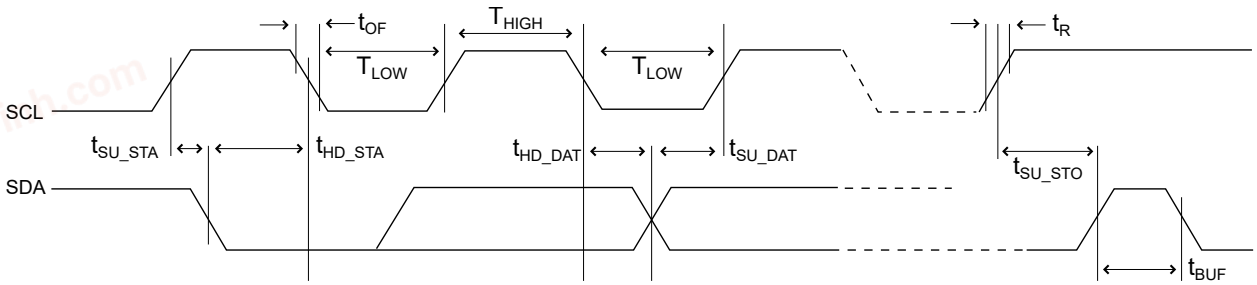

Table 37-21. TWI - Timing Specifications

Symbol	Description	Min.	Typ. †	Max.	Unit	Condition
V_{DD}	Supply voltage range	1.8	—	5.5	V	$f_{SCL} \le 400$ kHz
		2.2	—	5.5		$f_{SCL} \le 1$ MHz
f_{SCL}	SCL clock frequency	—	—	1000	kHz	Max. frequency requires system clock at 10 MHz
V_{IH}	Input high voltage	$0.7 \times V_{DD}$	—	—	V	
V_{IL}	Input low voltage	—	—	$0.3 \times V_{DD}$	V	
V_{HYS}	Hysteresis of Schmitt Trigger inputs	$0.1 \times V_{DD}$		$0.4 \times V_{DD}$	V	
V_{OL}	Output low voltage	—	—	$0.2 \times V_{DD}$	V	I_{load} = 20 mA, Fast mode+
		—	—	0.4V		I_{load} = 3 mA, Normal mode, V_{DD} > 2V
		—	—	$0.2 \times V_{DD}$		I_{load} = 3 mA, Normal mode, $V_{DD} \le 2$V
I_{OL}	Low-level output current	3	—	—	mA	$f_{SCL} \le 400$ kHz, V_{OL} = 0.4V
		20	—	—		$f_{SCL} \le 1$ MHz, V_{OL} = 0.4V
C_B *	Capacitive load for each bus line	—	—	400	pF	$f_{SCL} \le 100$ kHz
		—	—	400		$f_{SCL} \le 400$ kHz
		—	—	550		$f_{SCL} \le 1$ MHz
t_R *	Rise time for both SDA and SCL	—	—	1000	ns	$f_{SCL} \le 100$ kHz
		20	—	300		$f_{SCL} \le 400$ kHz
		—	—	120		$f_{SCL} \le 1$ MHz
t_{OF} *	Output fall time from V_{IHmin} to V_{ILmax}	—	—	250	ns	$f_{SCL} \le 100$ kHz 10 pF < C_B < 400 pF
		$20 \times (V_{DD}/5.5V)$	—	250		$f_{SCL} \le 400$ kHz 10 pF < C_B < 400 pF
		$20 \times (V_{DD}/5.5V)$	—	120		$f_{SCL} \le 1$ MHz 10 pF < C_B < 400 pF

© 2021 Microchip Technology Inc.
and its subsidiaries

chanhvinh.com

.....continued

Symbol	Description	Min.	Typ. †	Max.	Unit	Condition
t_{SP} *	Spikes suppressed by the input filter	0	—	50	ns	
I_L	Input current for each I/O pin	—	—	1	µA	$0.1 \times V_{DD} < V_I < 0.9 \times V_{DD}$
C_I *	Capacitance for each I/O pin	—	—	10	pF	
R_P	Value of pull-up resistor	$(V_{DD}-V_{OL}(max))/I_{OL}$	—	1000 ns/$(0.8473 \times C_B)$	Ω	$f_{SCL} \leq 100$ kHz
		—	—	300 ns/$(0.8473 \times C_B)$		$f_{SCL} \leq 400$ kHz
		—	—	120 ns/$(0.8473 \times C_B)$		$f_{SCL} \leq 1$ MHz
t_{HD_STA} *	Hold time (repeated) Start condition	4.0	—	—	µs	$f_{SCL} \leq 100$ kHz
		0.6	—	—		$f_{SCL} \leq 400$ kHz
		0.26	—	—		$f_{SCL} \leq 1$ MHz
T_{LOW} *	Low period of SCL Clock	4.7	—	—	µs	$f_{SCL} \leq 100$ kHz
		0.6	—	—		$f_{SCL} \leq 400$ kHz
		0.35	—	—		$f_{SCL} \leq 1$ MHz
T_{HIGH} *	High period of SCL Clock	4.0	—	—	µs	$f_{SCL} \leq 100$ kHz
		0.6	—	—		$f_{SCL} \leq 400$ kHz
		0.26	—	—		$f_{SCL} \leq 1$ MHz
t_{SU_STA} *	Setup time for a repeated Start condition	4.7	—	—	µs	$f_{SCL} \leq 100$ kHz
		0.6	—	—		$f_{SCL} \leq 400$ kHz
		0.26	—	—		$f_{SCL} \leq 1$ MHz
t_{HD_DAT} *	Data hold time across all corners	—	0	—	ns	SDAHOLD[1:0] = 0x0
		300	—	900		SDAHOLD[1:0] = 0x3
t_{SU_DAT}	Data setup time	250	—	—	ns	$f_{SCL} \leq 100$ kHz
		100	—	—		$f_{SCL} \leq 400$ kHz
		50	—	—		$f_{SCL} \leq 1$ MHz
t_{SU_STO} *	Setup time for Stop condition	4	—	—	µs	$f_{SCL} \leq 100$ kHz
		0.6	—	—		$f_{SCL} \leq 400$ kHz
		0.26	—	—		$f_{SCL} \leq 1$ MHz
t_{BUF} *	Bus free time between a Stop and Start condition	4.7	—	—	µs	$f_{SCL} \leq 100$ kHz
		1.3	—	—		$f_{SCL} \leq 400$ kHz

† Data in the "Typ." column is at $T_A = 25°C$ and $V_{DD} = 3.0V$ unless otherwise specified. These parameters are for design guidance only and are not tested.

* These parameters are characterized but not tested in production.

© 2021 Microchip Technology Inc. and its subsidiaries

chanhvinh.com

37.16 DAC

Table 37-22. DAC Electrical Specifications

Operating Conditions: • V_{DD} = 3.0V • T_A = 25°C						
Symbol	**Description**	**Min.**	**Typ. †**	**Max.**	**Unit**	**Conditions**
V_{DD}	Supply voltage	1.8	—	5.5	V	
V_{OUT}	Output voltage range	GND	—	V_{DD}	V	
V_{LSB}	Resolution	—	10	—	Bit	
V_{ACC}	Absolute accuracy	—	1	—	LSb	
t_{ST}	Settling Time(1)	—	7	—	µs	V_{DACREF} = V_{DD} = 3.0V, 50 pF Load
		—	10	—	µs	V_{DACREF} = V_{DD} = 5.5V, 50 pF Load
INL	Integral nonlinearity	-2.3	1	2.3	LSb	0x030 ≤ DAC.DATA < 0x2D0
DNL	Differential nonlinearity	-0.2	0.2	0.7	LSb	0x030 ≤ DAC.DATA < 0x2D0
E_{OFF}	Offset error	1.7	2.8	5	LSb	
E_{GAIN}	Gain error	-3.3	-1.1	0.7	LSb	

† Data in the "Typ." column is at T_A = 25°C and V_{DD} = 3.0V unless otherwise specified. These parameters are for design guidance only and are not tested.

Note:

1. Settling time measured while DAC.DATA[9:0] transitions from '0x000' to '0x3FF'.

37.17 ADC

Table 37-23. ADC Accuracy Specifications

Operating Conditions: • V_{DD} = 3.0V • T_A = 25°C						
Symbol	**Description**	**Min.**	**Typ. †**	**Max.**	**Unit**	**Conditions**
N_R	Resolution	—	—	12	bit	
E_{INL}	Integral nonlinearity error	-1	0.1	1	LSb	
E_{DNL}	Differential nonlinearity error(1)	-1	0.1	1	LSb	
E_{OFF}	Offset error	1.3	3	5	LSb	
E_{GAIN}	Gain error	-5	1.5	5	LSb	
E_{ABS}	Absolute error	—	—	—	LSb	
V_{ADCREF}	ADC reference voltage	1.024	—	V_{DD}	V	
V_{AIN}	Full-scale range	GND	—	V_{ADCREF}	V	
Z_{AIN}	Recommended impedance of analog voltage source	—	10	—	kΩ	

© 2021 Microchip Technology Inc. and its subsidiaries

chanhvinh.com

.....continued

Operating Conditions:
- V_{DD} = 3.0V
- T_A = 25ºC

Symbol	Description	Min.	Typ. †	Max.	Unit	Conditions
R_{VREFA}	ADC voltage reference ladder impedance(2)	—	50	—	kΩ	

† Data in the "Typ." column is at T_A = 25°C and V_{DD} = 3.0V unless otherwise specified. These parameters are for design guidance only and are not tested.

Notes:
1. The ADC conversion result never decreases with an increase in the input and has no missing codes.
2. This is the impedance seen by the VREFA pin when the external reference is selected.

Table 37-24. ADC Conversion Timing Specifications

Symbol	Description	Min.	Typ. †	Max.	Unit	Conditions
T_{CLK_ADC} *	ADC clock period	0.5	—	8	µs	
t_{CNV}	Conversion time	—	$13.5T_{CLK_ADC} + 2T_{CLK_PER}$	—		
t_{ACQ}	Acquisition time	—	$2T_{CLK_ADC}$	—	µs	
f_{ADC} *	Sample rate	8	—	130	ksps	
t_S	Sampling time	—	$2T_{CLK_ADC}$	—		
t_{SENSE} *	Delay for changing MUXPOS to TEMP	—	40	—	µs	
t_{ADC_INIT} *	Initialization time	—	6	—	µs	

† Data in the "Typ." column is at T_A = 25°C and V_{DD} = 3.0V unless otherwise specified. These parameters are for design guidance only and are not tested.

* These parameters are characterized but not tested in production.

37.18 AC

Table 37-25. Analog Comparator Specifications

Operating Conditions:
- V_{DD} = 3.0V
- T_A = 25ºC

Symbol	Description	Min.	Typ. †	Max.	Unit	Conditions
V_{IN}	Input voltage range	-0.2	—	V_{DD}	V	
I_L	Input leakage current	—	5	—	nA	
V_{OFF}	Input offset voltage	-11	±5	11	mV	0.7V < V_{IN} < (V_{DD} - 0.7V)
		-15	±5	15		0.1V < V_{IN} < (V_{DD} - 0.1V)
CMRR	Common mode input rejection ratio	—	70	—	dB	0.1V < V_{IN} < (V_{DD} - 0.1V)

© 2021 Microchip Technology Inc. and its subsidiaries

chanhvinh.com

.....continued

Operating Conditions:
- V_{DD} = 3.0V
- T_A = 25°C

Symbol	Description	Min.	Typ. †	Max.	Unit	Conditions
V_{HYST}	Hysteresis	—	10	—	mV	CTRLA.HYSMODE = 0x1
		—	25	—		CTRLA.HYSMODE = 0x2
		—	50	—		CTRLA.HYSMODE = 0x3
t_{RESP} *	Response time, rising edge	—	85	120	ns	CTRLA.POWER = 0x1, V_{CM} = V_{DD}/2
	Response time, falling edge	—	85	120	ns	
	Response time, rising edge	—	250	350	ns	CTRLA.POWER = 0x1, V_{CM} = V_{DD}/2
	Response time, falling edge	—	220	300	ns	
	Response time, rising edge	—	460	680	ns	CTRLA.POWER = 0x1, V_{CM} = V_{DD}/2
	Response time, falling edge	—	430	550	ns	

† Data in the "Typ." column is at T_A = 25°C and V_{DD} = 3.0V unless otherwise specified. These parameters are for design guidance only and are not tested.

* These parameters are characterized but not tested in production.

37.19 PTC

Table 37-26. Peripheral Touch Controller Specifications

Operating Conditions:
- V_{DD} = 3.0V
- T_A = 25°C

Symbol	Description	Min.	Typ. †	Max.	Unit	Conditions
V_{DD}	Supply voltage	2.5	—	5.5	V	
C_{LOAD} *	Maximum load, mutual capacitance	—	—	32	pF	
	Maximum load, self capacitance	—	—	64	pF	
C_{INT} *		—	30	—	pF	
C_{SH}	Driven shield capacitive drive(1)	—	300	—	pF	
CLK_{PTC_ADC} *	PTC ADC operating frequency	250	—	2000	kHz	

† Data in the "Typ." column is at T_A = 25°C and V_{DD} = 3.0V unless otherwise specified. These parameters are for design guidance only and are not tested.

* These parameters are characterized but not tested in production.

© 2021 Microchip Technology Inc. and its subsidiaries

chanhvinh.com

37.20 ZCD

Table 37-27. Zero-Cross Detector Specifications

Operating Conditions: • V_{DD} = 3.0V • T_A = 25°C						
Symbol	**Description**	**Min.**	**Typ. †**	**Max.**	**Unit**	**Conditions**
V_{PINZC}	Voltage on the ZCD pin	—	0.95	—	V	
I_{ZCD_MAX}	Maximum source or sink current	—	—	600	µA	
t_{RESPH}	Response time, rising edge	—	500	—	ns	
t_{RESPL}	Response time, falling edge	—	500	—	ns	

† Data in the "Typ." column is at T_A = 25°C and V_{DD} = 3.0V unless otherwise specified. These parameters are for design guidance only and are not tested.

37.21 UPDI

Figure 37-8. UPDI Enable Sequence with Dedicated UPDI Pin

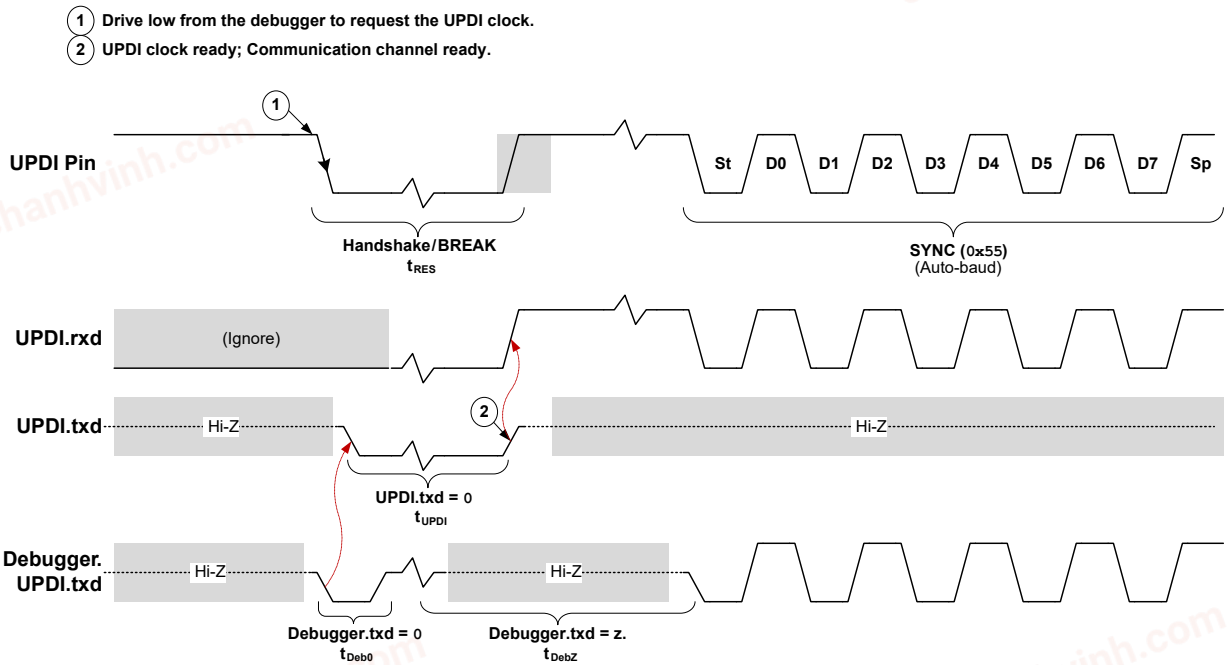

Table 37-28. UPDI Timing Specifications

Symbol	Description	Min.	Max.	Unit	
t_{RES} *	Duration of Handshake/Break on $\overline{RESET}$	10	200	µs	
t_{UPDI} *	Duration of UPDI.txd = 0	10	200	µs	
t_{Deb0} *	Duration of Debugger.txd = 0	0.2	1	µs	
t_{DebZ} *	Duration of Debugger.txd = z	200	14000	µs	

chanhvinh.com

.....continued

Symbol	Description	Min.	Max.	Unit	
f_{UPDI} *	UPDI baud rate	—	1.8	Mbps	0ºC ≤ T_A ≤ +50ºC
		—	0.9	Mbps	T_A < 0ºC or T_A > +50ºC
* These parameters are characterized but not tested in production.					

chanhvinh.com

38. Characteristics Graphs

The graphs provided show a statistical summary based on a limited number of samples and are provided for information purposes only. The performance characteristics listed herein are neither tested nor ensured.

In some graphs, the data presented may be outside the specified operating range (e.g., outside the specified power supply range) and, therefore outside the warranted range.

Note: 'Typical' represents the mean of the distribution at 25°C. 'Maximum' or 'Max.', 'Minimum' or 'Min.' represents (mean + 3σ) or (mean - 3σ) respectively, where σ is a standard deviation over each temperature range.

38.1 Power Consumption

38.1.1 Active Mode

Figure 38-1. Active Power Consumption vs. V_{DD} (MCLKCTRLA.CLKSEL = EXTCLK, EXTCLK = 4 MHz)

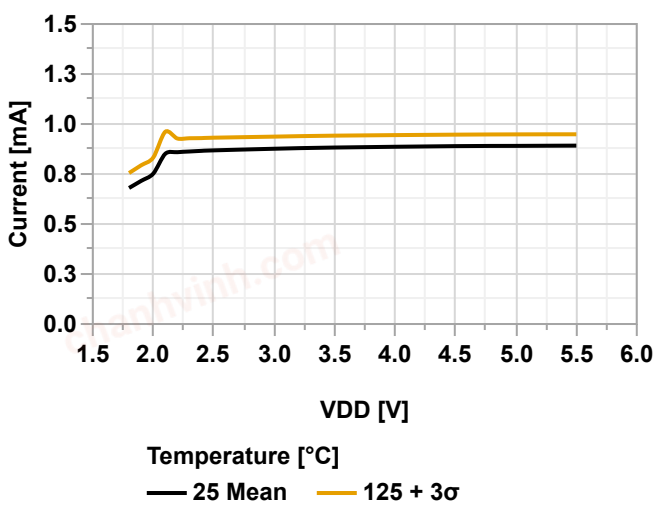

Figure 38-2. Active Power Consumption vs. V_{DD} (MCLKCTRLA.CLKSEL = EXTCLK, EXTCLK = 24 MHz)

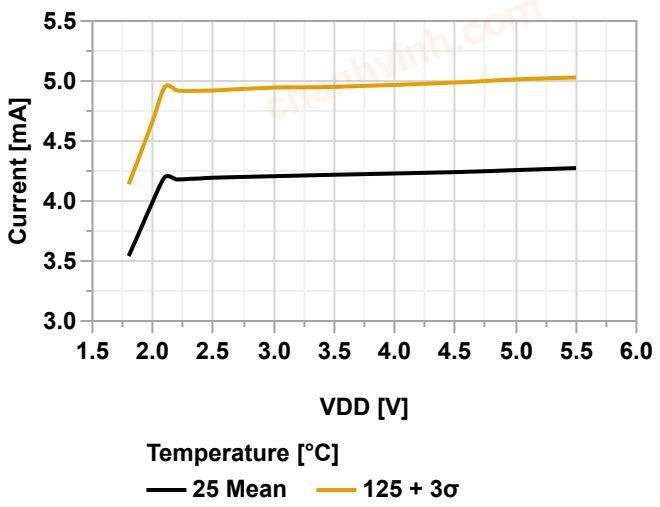

chanhvinh.com

Figure 38-3. Active Power Consumption vs. V_{DD} (MCLKCTRLA.CLKSEL = OSCHF, OSCHF = 4 MHz)

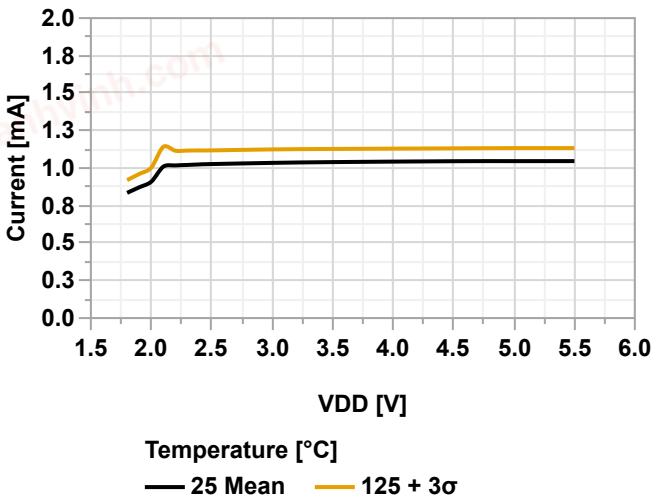

Figure 38-4. Active Power Consumption vs. V_{DD} (MCLKCTRLA.CLKSEL = OSCHF, OSCHF = 24 MHz)

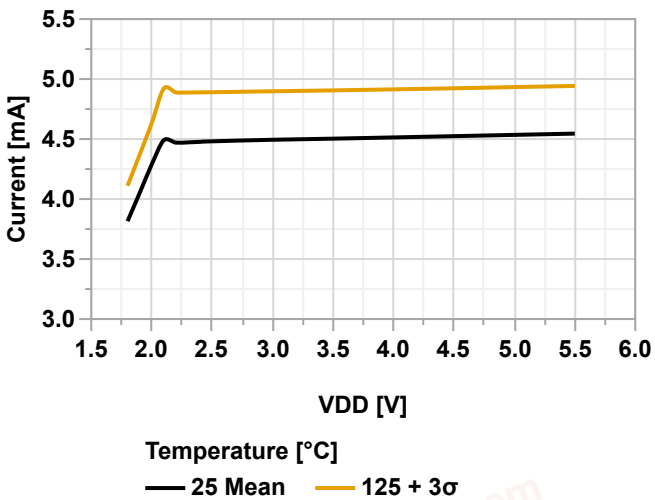

Figure 38-5. Active Power Consumption vs. V_{DD} (MCLKCTRLA.CLKSEL = OSC32K)

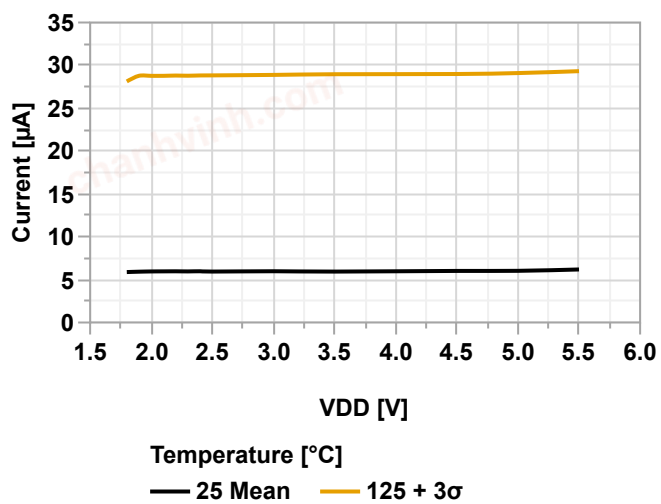

chanhvinh.com

38.1.2 Idle Sleep Mode

Figure 38-6. Idle Power Consumption vs. V_{DD} (MCLKCTRLA.CLKSEL = EXTCLK, EXTCLK = 4 MHz)

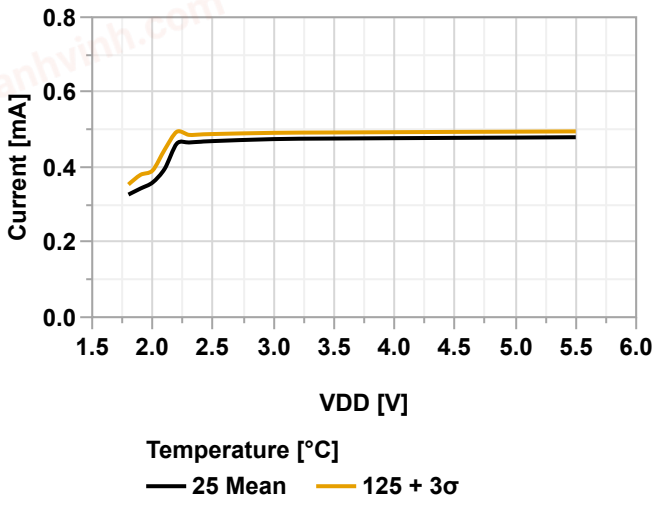

Figure 38-7. Idle Power Consumption vs. V_{DD} (MCLKCTRLA.CLKSEL = EXTCLK, EXTCLK = 24 MHz)

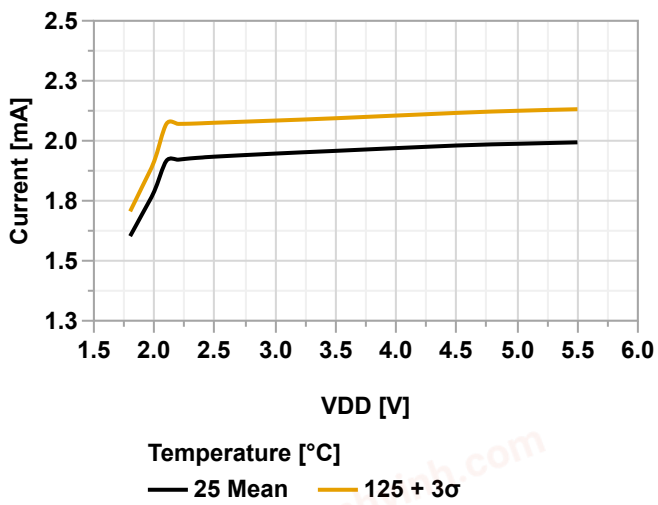

Figure 38-8. Idle Power Consumption vs. V_{DD} (MCLKCTRLA.CLKSEL = OSCHF, OSCHF = 4 MHz)

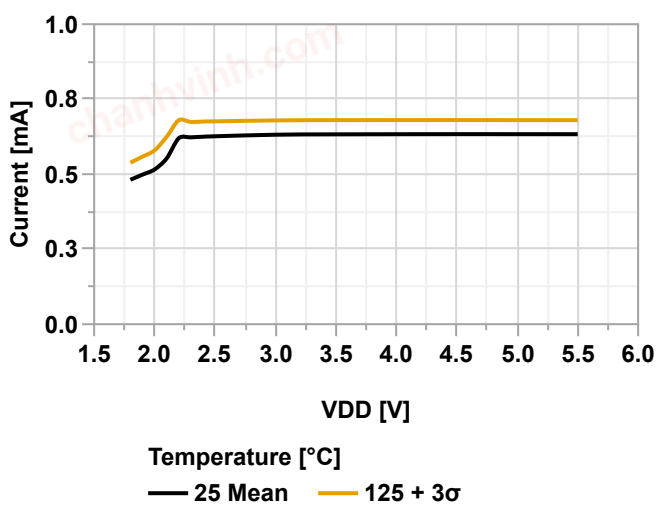

Figure 38-9. Idle Power Consumption vs. V_{DD} (MCLKCTRLA.CLKSEL = OSCHF, OSCHF = 24 MHz)

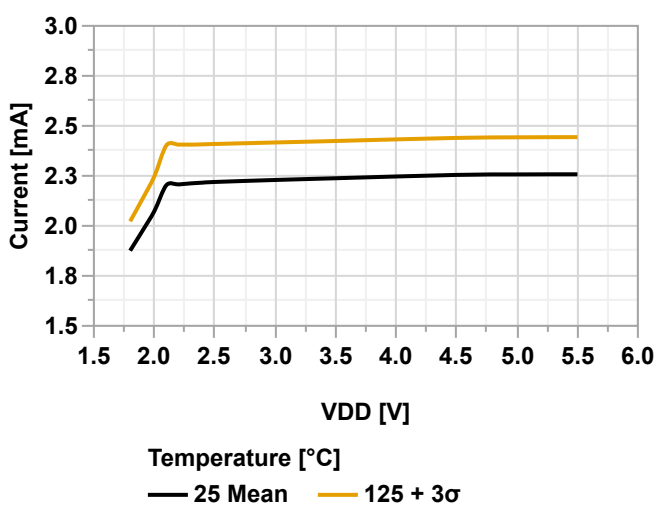

chanhvinh.com

Figure 38-10. Idle Power Consumption vs. V_{DD} (MCLKCTRLA.CLKSEL = OSC32K)

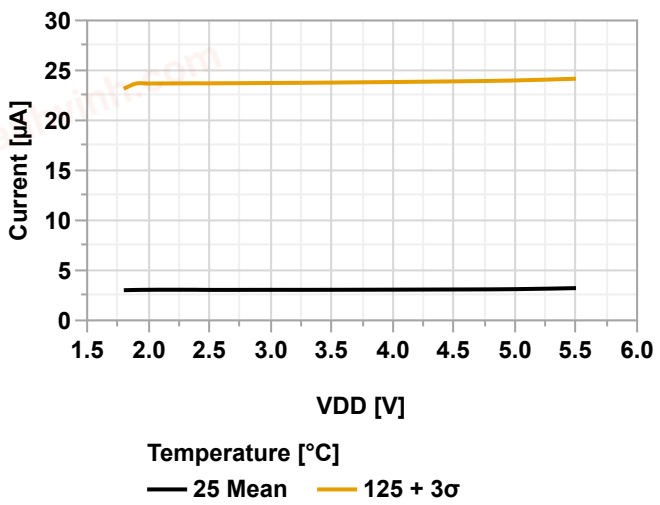

38.1.3 Standby Sleep Mode

Figure 38-11. OSC32K Standby Power Consumption vs. V_{DD}

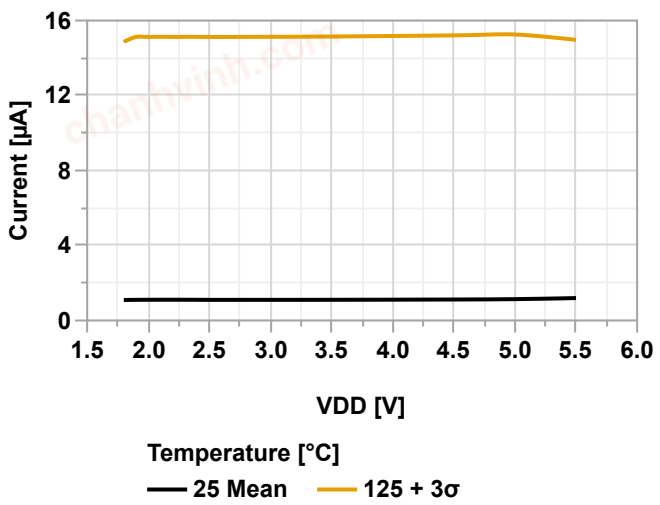

chanhvinh.com

Figure 38-12. Standby Power Consumption vs. V_{DD} (RTC.CLKSEL = OSC32K)

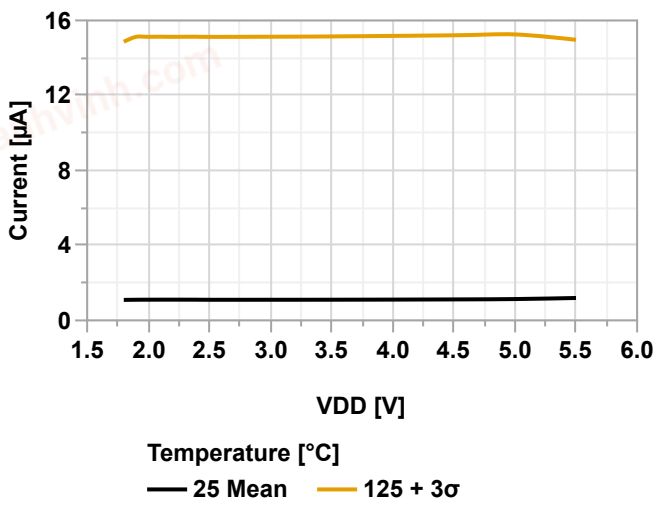

Figure 38-13. Standby Power Consumption vs. V_{DD} (RTC.CLKSEL = XOSC32K, XOSC32KCTRLA.LPMODE = 1)

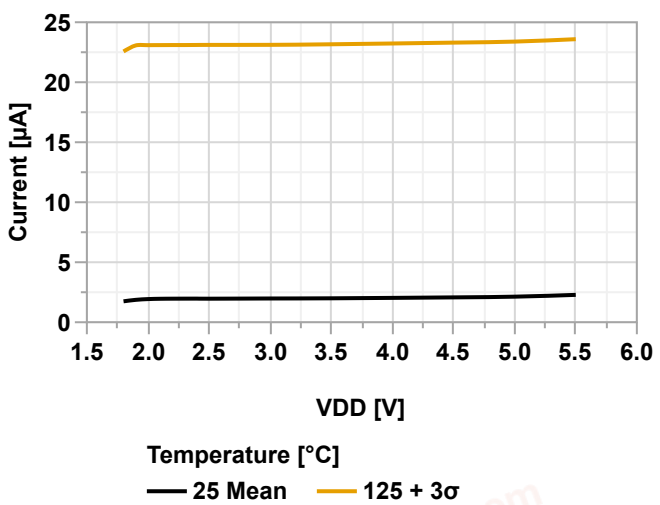

Figure 38-14. Standby Power Consumption vs. V_{DD} (RTC.CLKSEL = XOSC32K, XOSC32KCTRLA.LPMODE = 0)

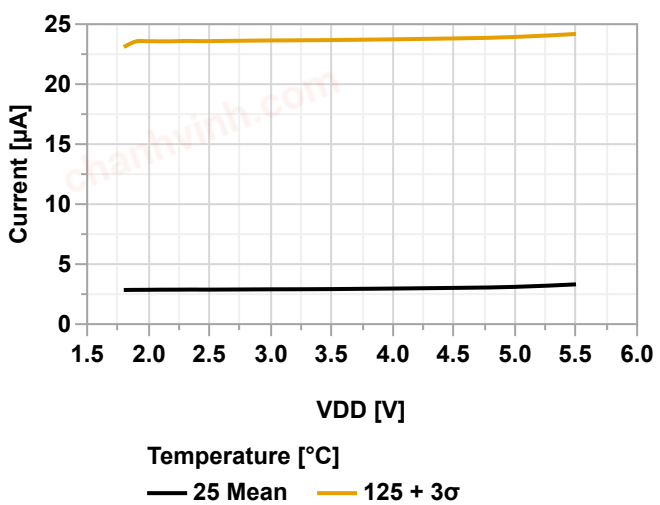

chanhvinh.com

38.1.4 Power-Down Sleep Mode

Figure 38-15. Maximum Power-Down Power Consumption vs. Temperature (V_{DD} = 1.8V)

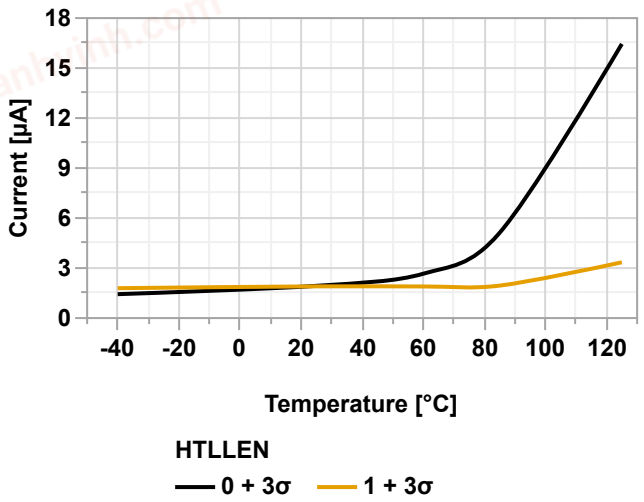

Figure 38-16. Maximum Power-Down Power Consumption vs. Temperature (V_{DD} = 3.0V)

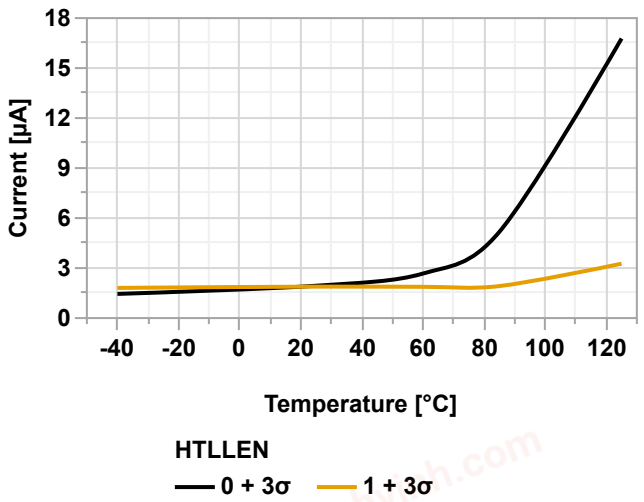

Figure 38-17. Maximum Power-Down Power Consumption vs. Temperature (V_{DD} = 5.5V)

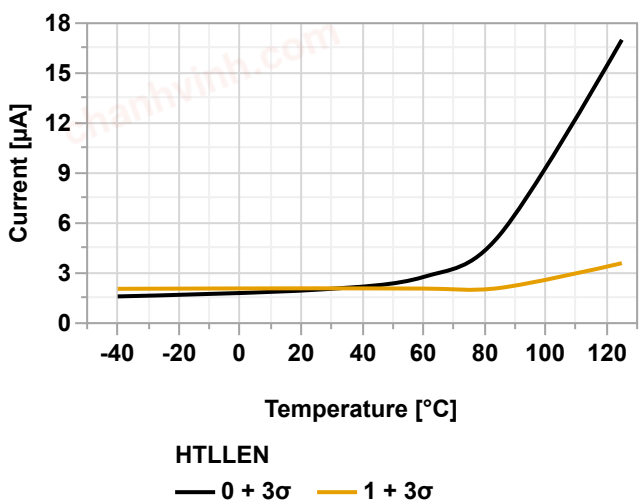

chanhvinh.com

38.1.5 Power Consumption in Reset Mode

Figure 38-18. Reset Power Consumption vs. V_{DD}

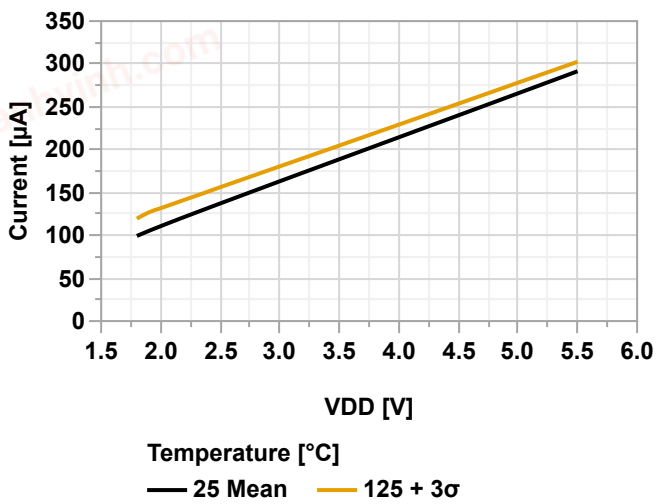

38.2 Peripheral Power Consumption

38.2.1 ADC

Figure 38-19. ADC Power Consumption vs. V_{DD} (ADC @60 ksps)

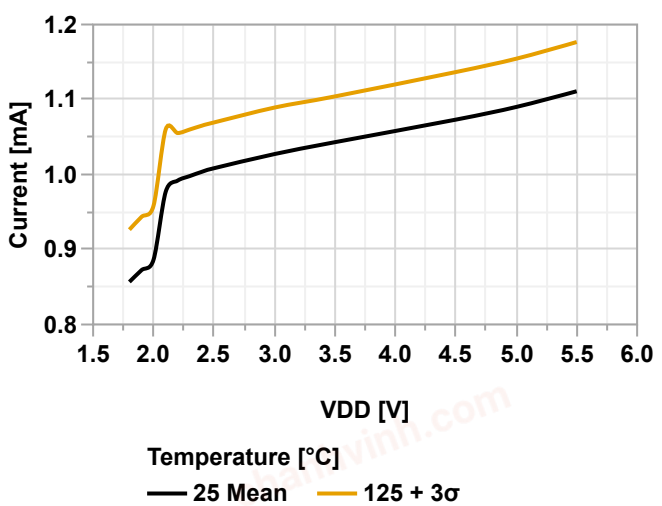

Figure 38-20. ADC Power Consumption vs. V_{DD} (ADC @120 ksps)

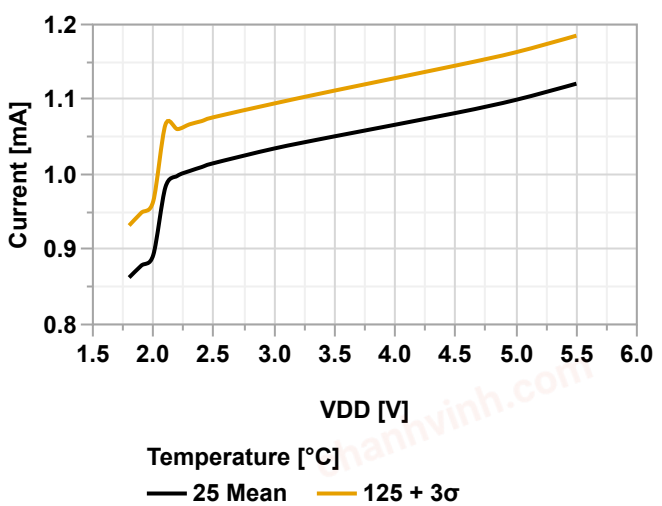

chanhvinh.com

38.2.2 AC

Figure 38-21. AC Power Consumption vs. V_{DD} (CTRLA.POWER = PROFILE0)

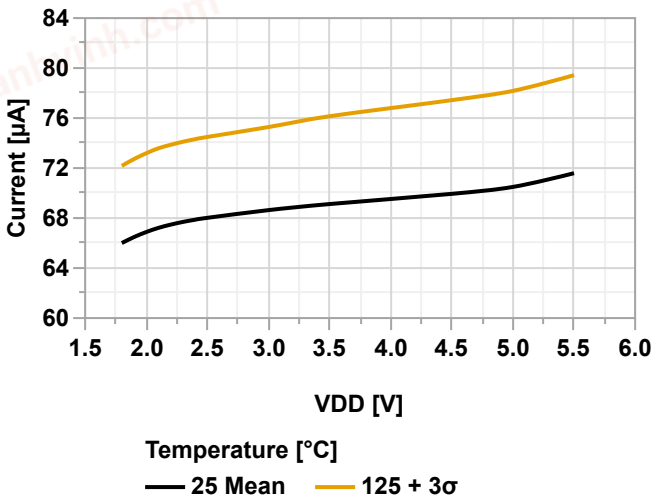

Figure 38-22. AC Power Consumption vs. V_{DD} (CTRLA.POWER = PROFILE1)

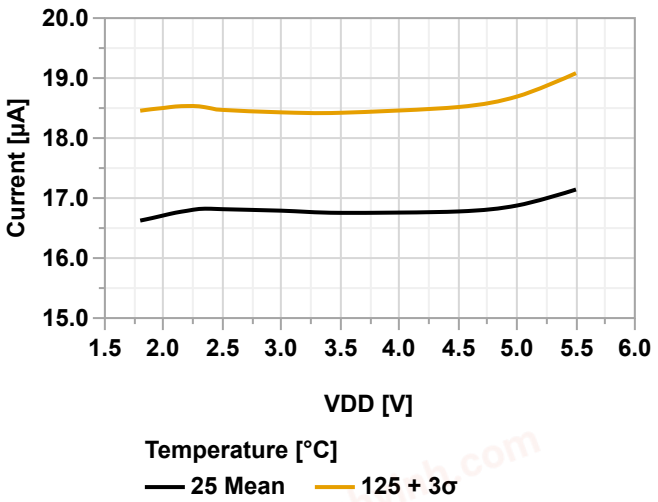

Figure 38-23. AC Power Consumption vs. V_{DD} (CTRLA.POWER = PROFILE2)

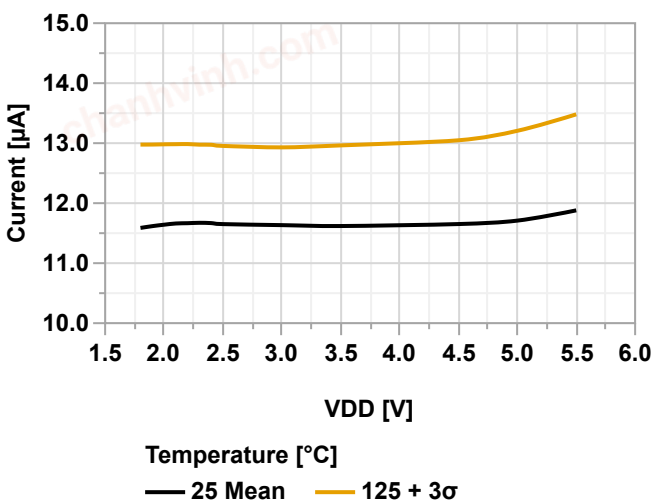

chanhvinh.com

38.2.3 BOD

Figure 38-24. BOD Power Consumption vs. V_{DD} (BOD Continuous Mode)

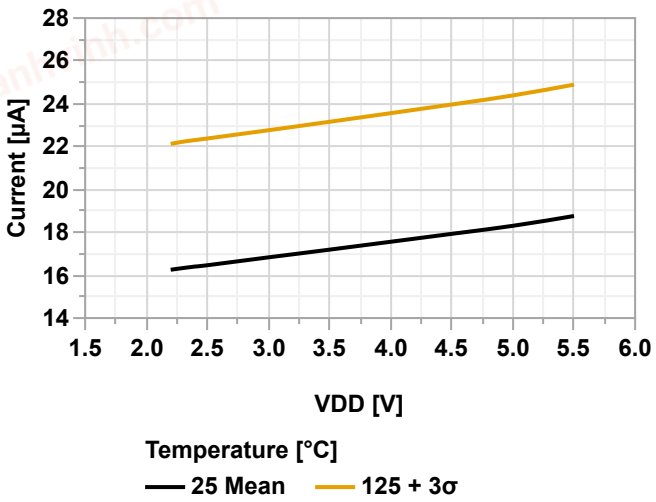

Figure 38-25. BOD Power Consumption vs. V_{DD} (BOD Sampling Mode @128 Hz)

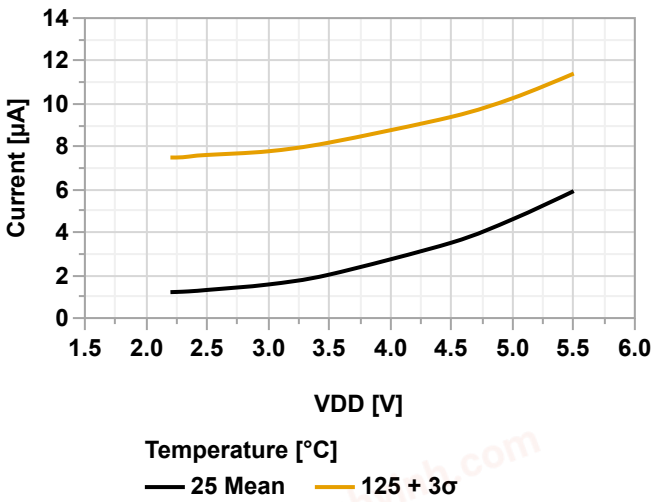

Figure 38-26. BOD Power Consumption vs. V_{DD} (BOD Sampling Mode @32 Hz)

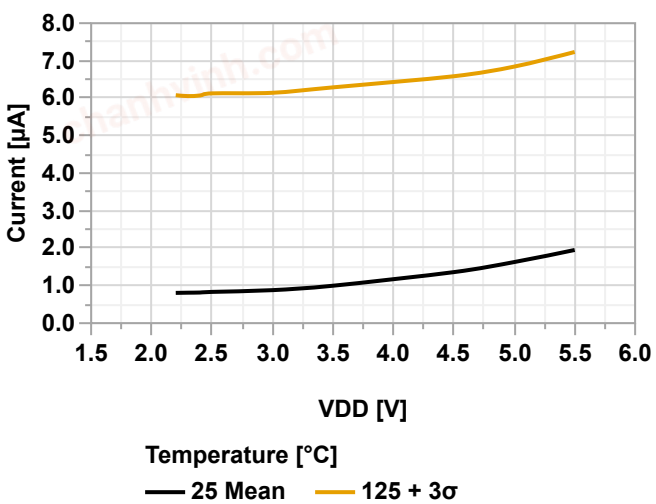

chanhvinh.com

38.2.4 DAC

Figure 38-27. DAC Power Consumption vs. V_{DD}

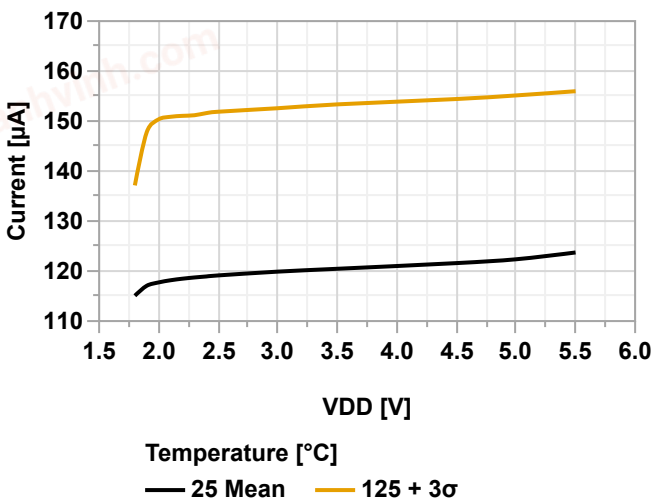

38.2.5 Program Memory

Figure 38-28. Flash Erase Power Consumption vs. V_{DD}

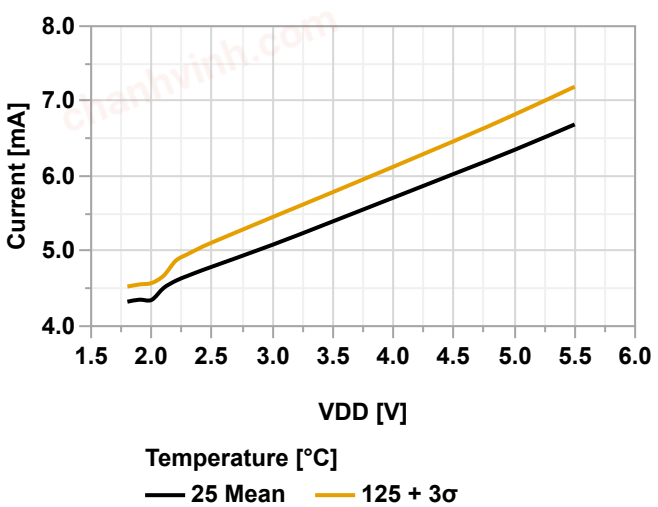

Figure 38-29. Flash Write Power Consumption vs. V_{DD}

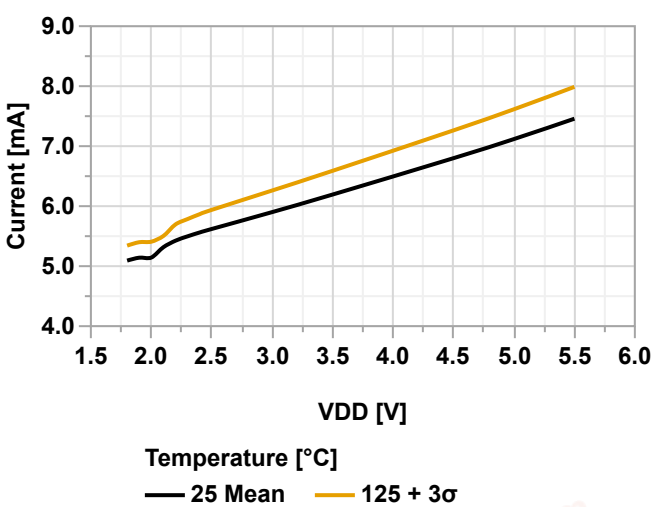

chanhvinh.com

38.2.6 OSC32K

Figure 38-30. OSC32K Power Consumption vs. V_{DD}

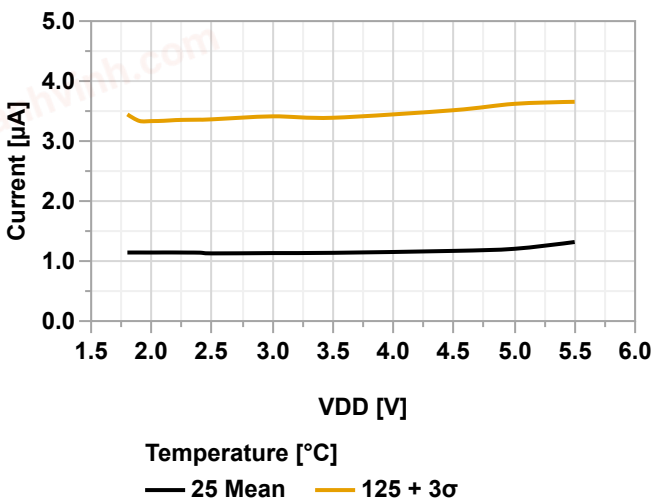

38.2.7 RTC

Figure 38-31. RTC Power Consumption vs. V_{DD}

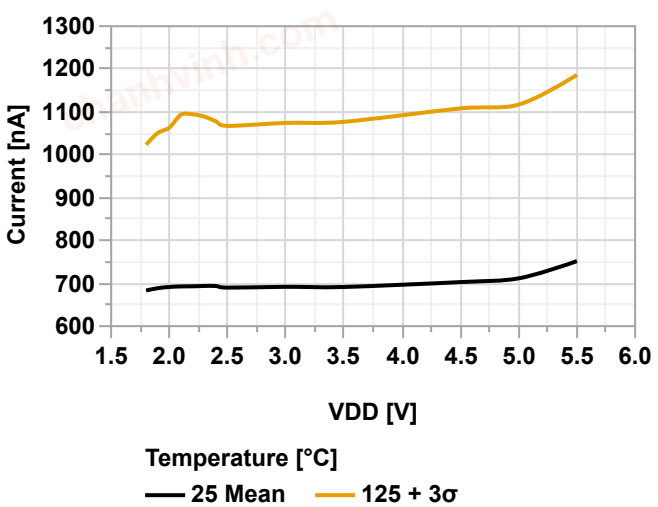

© 2021 Microchip Technology Inc.
and its subsidiaries

chanhvinh.com

38.2.8 TCA

Figure 38-32. TCA Power Consumption vs. V_{DD}

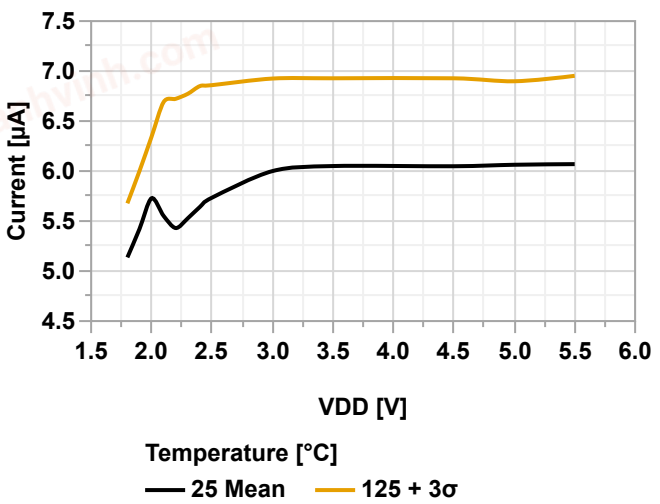

38.2.9 TCB

Figure 38-33. TCB Power Consumption vs. V_{DD}

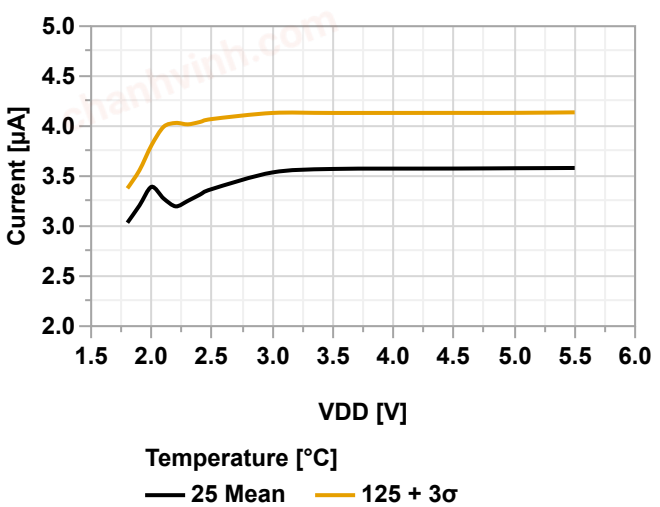

chanhvinh.com

38.2.10 TCD

Figure 38-34. TCD Power Consumption vs. V_{DD}

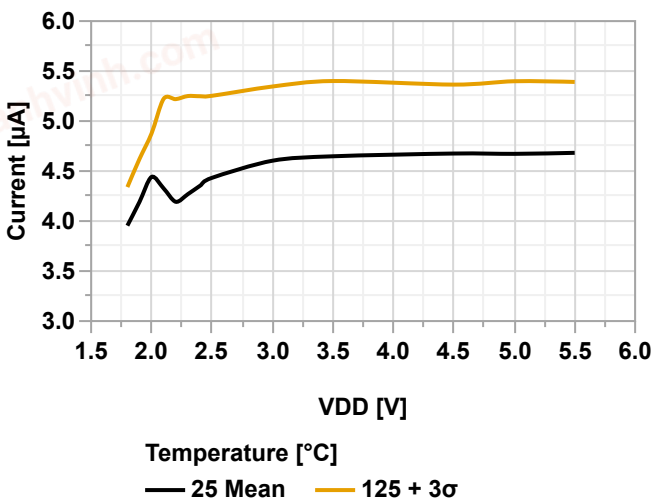

38.2.11 TWI

Figure 38-35. TWI Power Consumption vs. V_{DD} (TWI Host Mode @100 kHz)

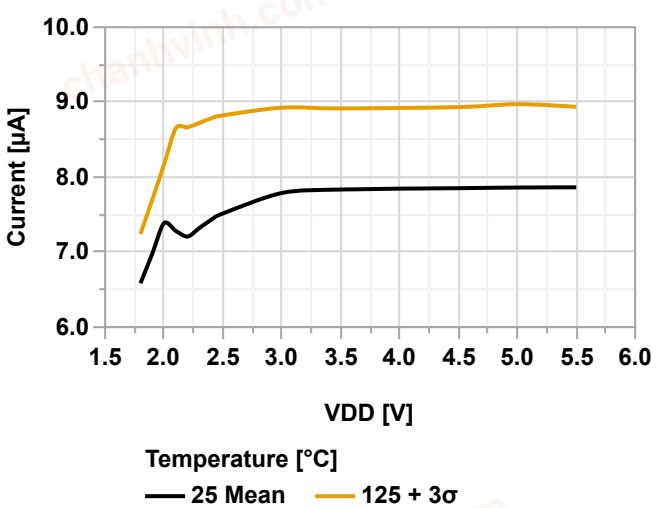

Figure 38-36. TWI Power Consumption vs. V_{DD} (TWI Client Mode @100 kHz)

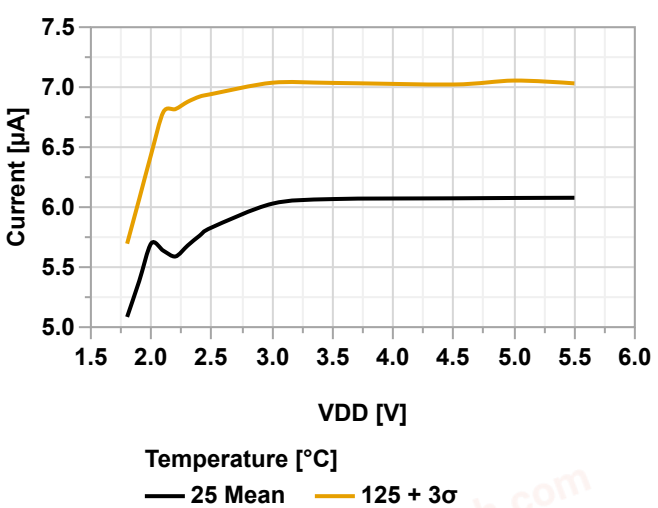

© 2021 Microchip Technology Inc.
and its subsidiaries

chanhvinh.com

38.2.12 USART

Figure 38-37. USART Power Consumption vs. V_{DD} (USART Enabled @9600 Baud)

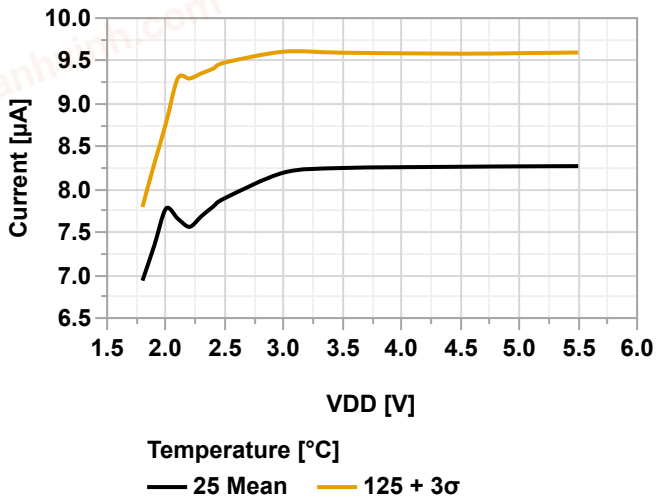

38.2.13 VREF

Figure 38-38. VREF Power Consumption vs. V_{DD} (ADC0REF Enabled)

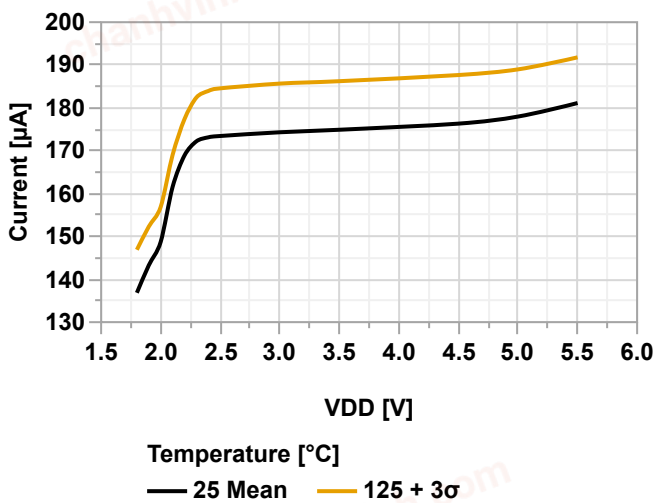

Figure 38-39. VREF Power Consumption vs. V_{DD} (ACREF Enabled)

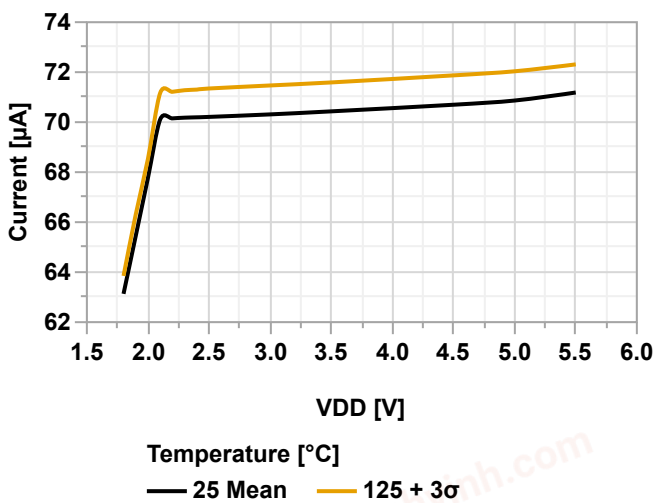

chanhvinh.com

Figure 38-40. VREF Power Consumption vs. V_{DD} (DACREF Enabled)

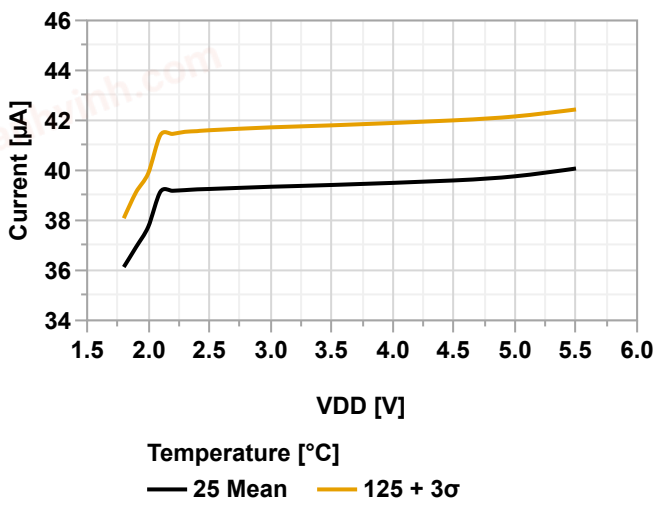

38.2.14 WDT

Figure 38-41. WDT Power Consumption vs. V_{DD}

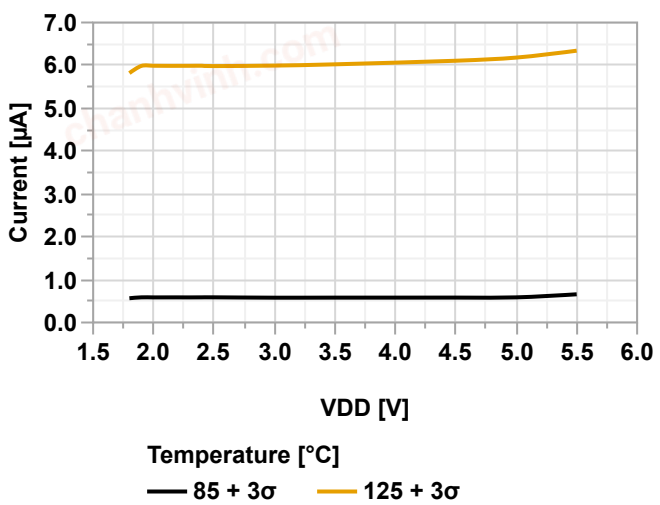

chanhvinh.com

38.3 CLKCTRL

38.3.1 OSCHF

Figure 38-42. Frequency Shift vs. OSCHFTUNE Code (V_{DD} = 3.0V)

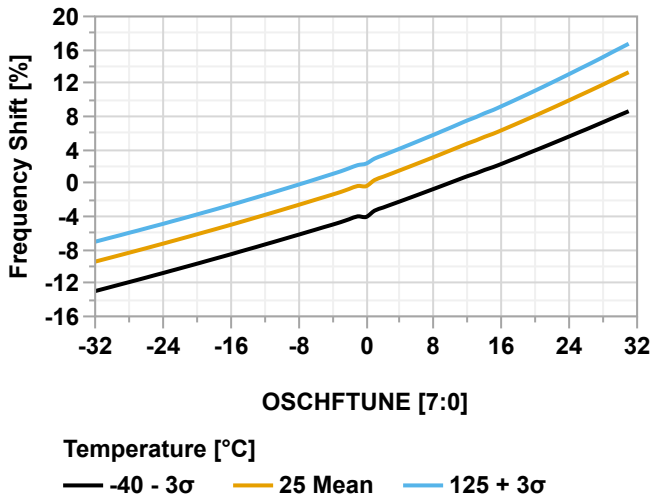

38.3.2 XOSC32K

Figure 38-43. Typical XOSC32K Start-up Time vs. V_{DD} (T = 25°C)

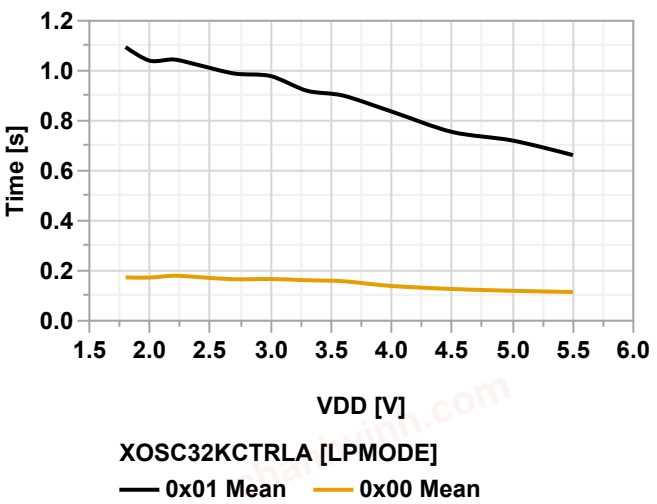

chanhvinh.com

38.3.3 Wake-up Time

Figure 38-44. Wake-up Time from Power-Down vs. V_{DD} (OSCHF = 16 MHz, VREGCTRL = AUTO)

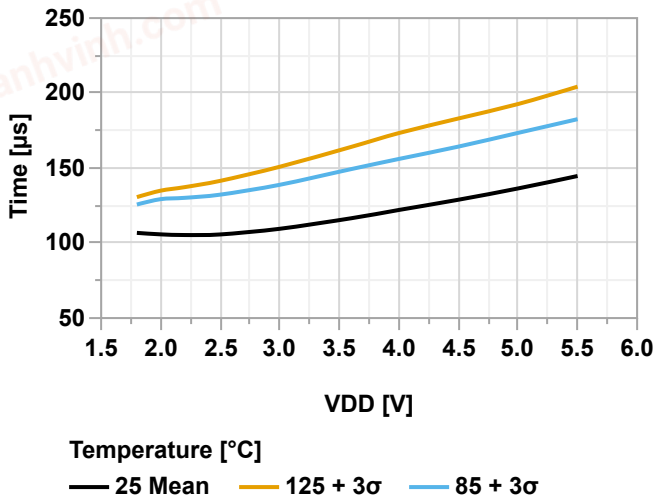

Figure 38-45. Wake-up Time from Power-Down vs. V_{DD} (OSCHF = 16 MHz, VREGCTRL = FULL)

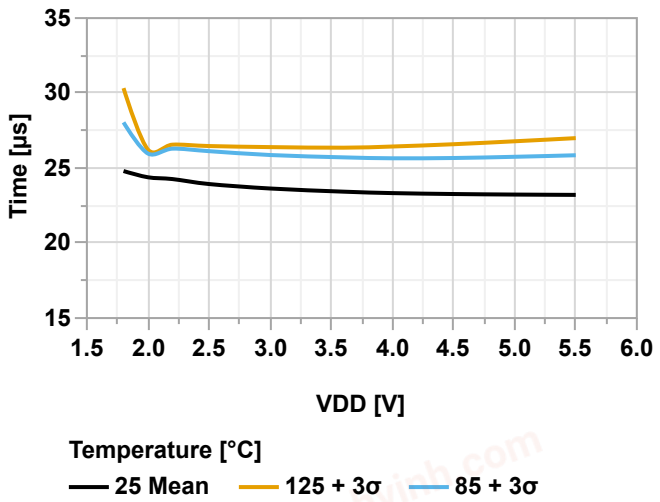

Figure 38-46. Wake-up Time from Power-Down vs. V_{DD} (OSCHF = 4 MHz, VREGCTRL = AUTO)

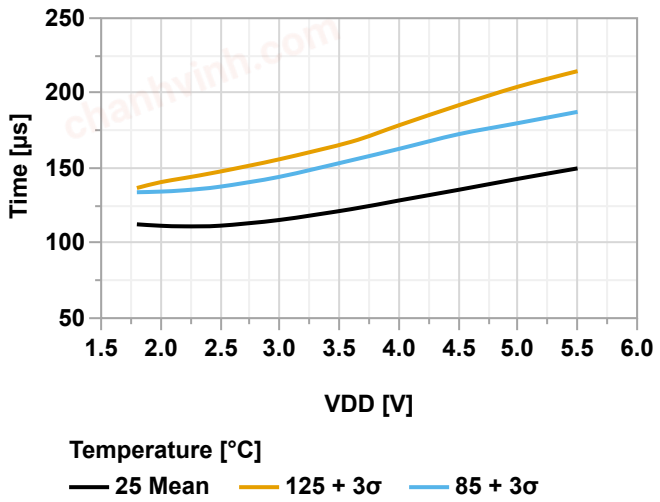

Figure 38-47. Wake-up Time from Power-Down vs. V_{DD} (OSCHF = 4 MHz, VREGCTRL = FULL)

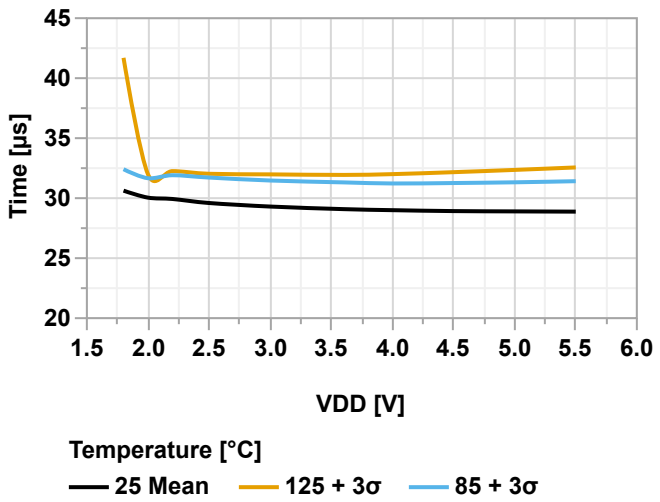

chanhvinh.com

Figure 38-48. Wake-up Time from Power-Down vs. V_{DD} (OSC32K, VREGCTRL = AUTO)

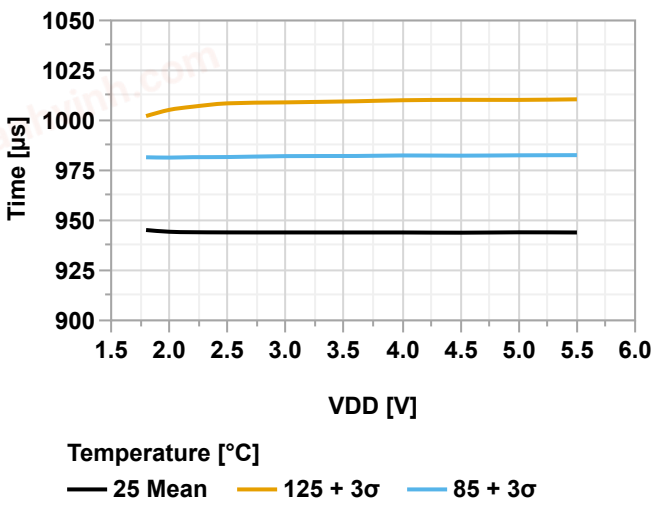

38.4 Reset Controller

38.4.1 RST

Figure 38-49. Minimum Reset Pulse Width vs. V_{DD}

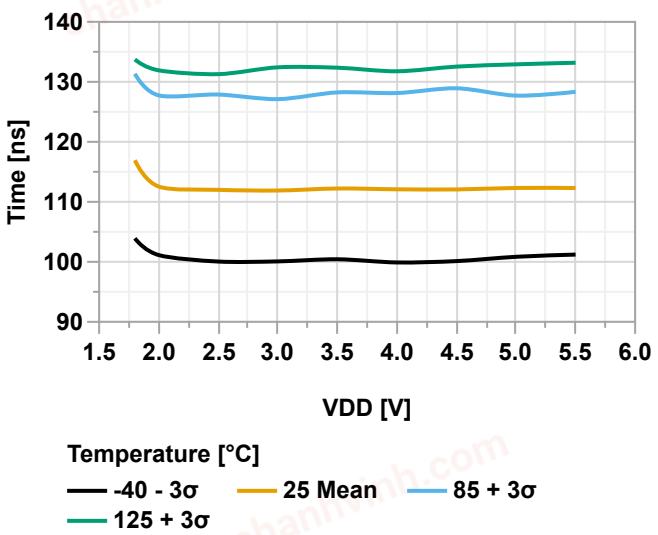

chanhvinh.com

38.4.2 Start-up Timer

Figure 38-50. Start-up Time vs. V_{DD} (SYSCFG1 = 0x07)

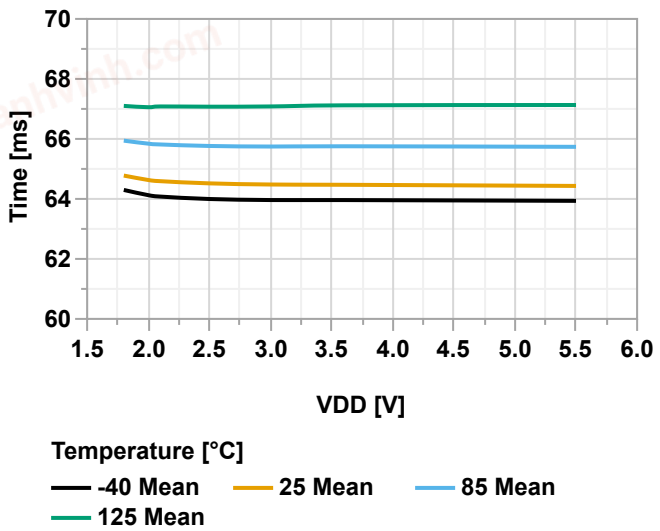

Figure 38-51. Start-up Time vs. Temperature (SYSCFG1 = 0x07, V_{DD} = 1.8V)

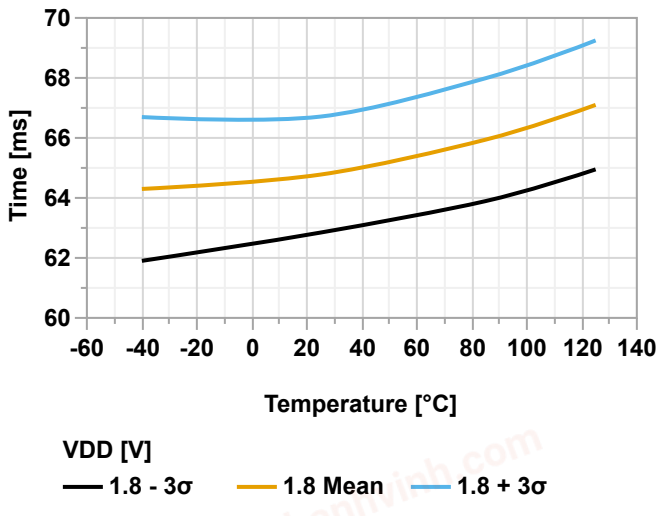

Figure 38-52. Start-up Time vs. Temperature (SYSCFG1 = 0x07, V_{DD} = 3.0V)

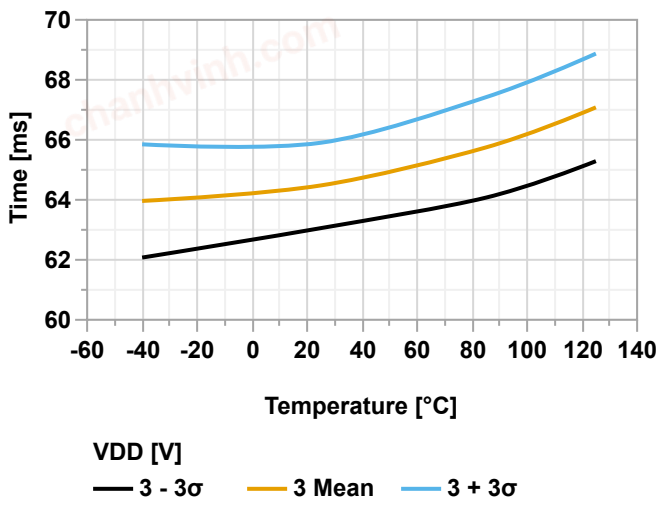

Figure 38-53. Start-up Time vs. Temperature (SYSCFG1 = 0x07, V_{DD} = 5.5V)

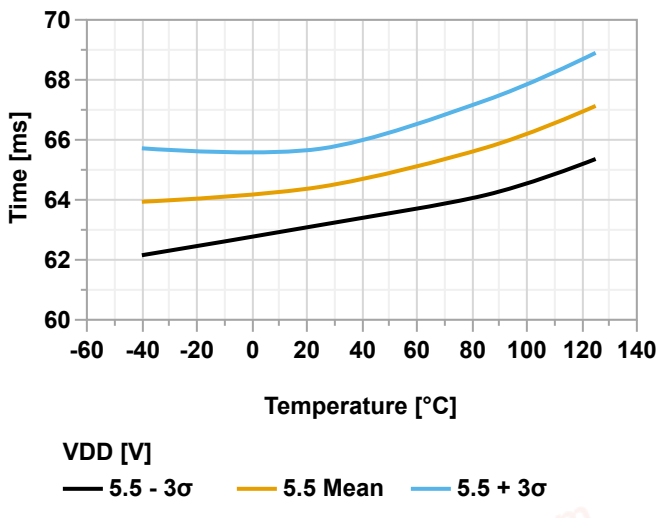

© 2021 Microchip Technology Inc.
and its subsidiaries

chanhvinh.com

38.4.3 POR

Figure 38-54. $\overline{\text{POR}}$ Release Voltage vs. Temperature

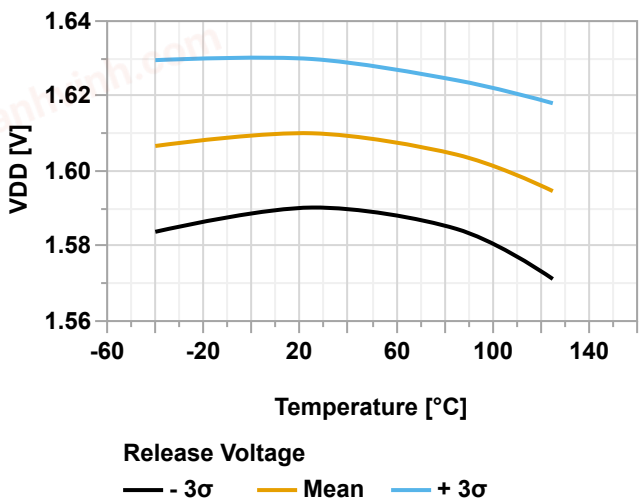

Figure 38-55. $\overline{\text{POR}}$ Re-Arm Voltage vs. Temperature

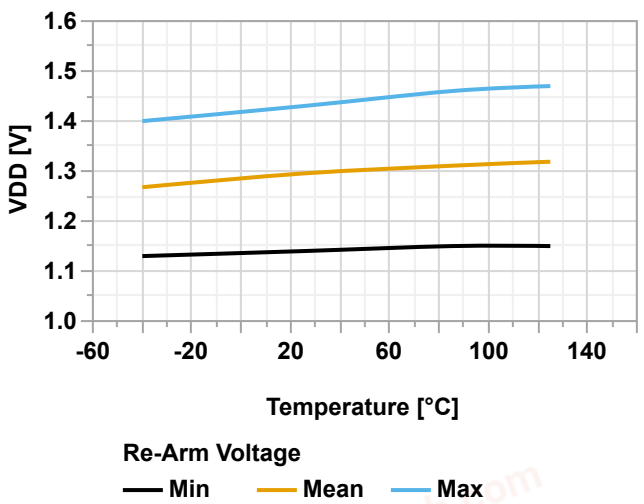

38.4.4 BOD

Figure 38-56. BOD Minimum Reset Pulse Width vs. Temperature

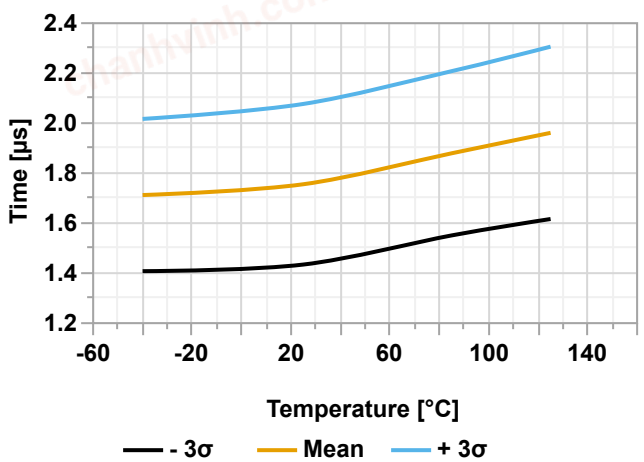

Figure 38-57. BOD Response Time vs. Temperature

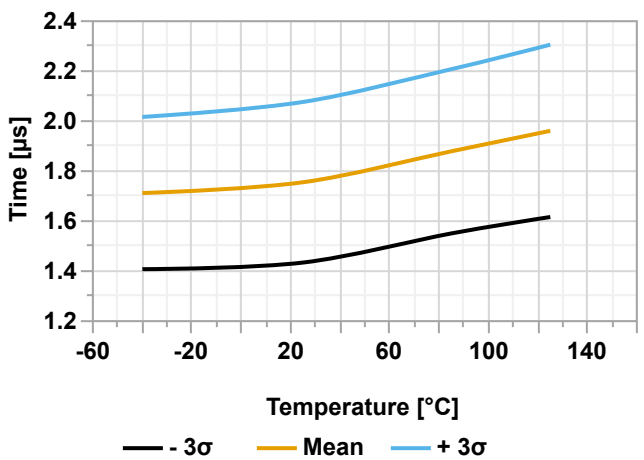

chanhvinh.com

Figure 38-58. BOD Threshold Level vs. Temperature (BODCFG.LVL = 0x00)

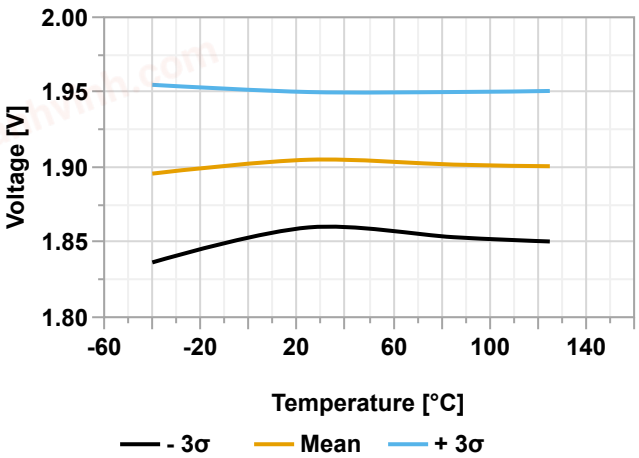

Figure 38-59. BOD Threshold Level vs. Temperature (BODCFG.LVL = 0x01)

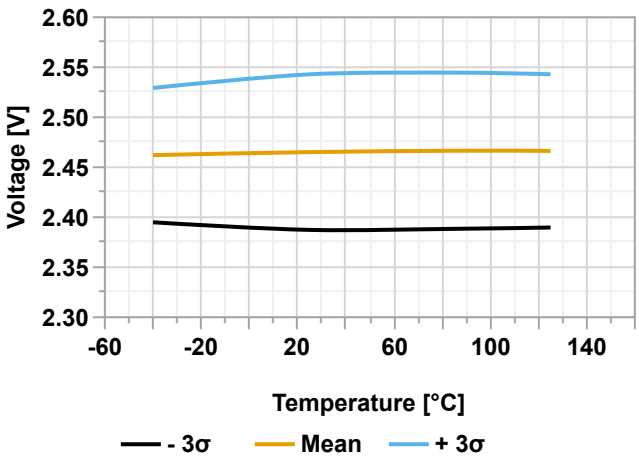

Figure 38-60. BOD Threshold Level vs. Temperature (BODCFG.LVL = 0x02)

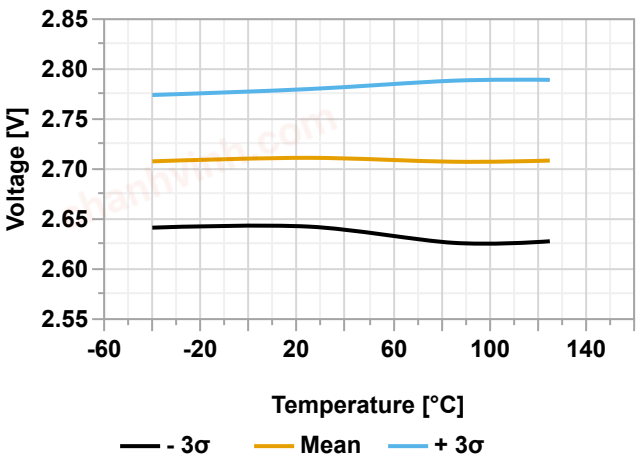

Figure 38-61. BOD Threshold Level vs. Temperature (BODCFG.LVL = 0x03)

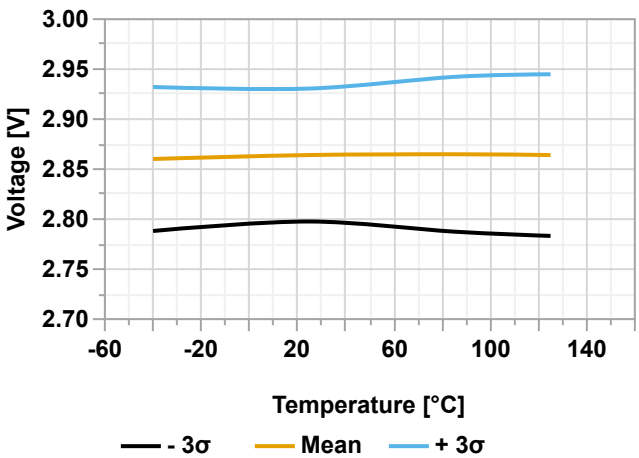

© 2021 Microchip Technology Inc. and its subsidiaries

chanhvinh.com

Figure 38-62. BOD Hysteresis vs. Temperature (BODCFG.LVL = 0x00)

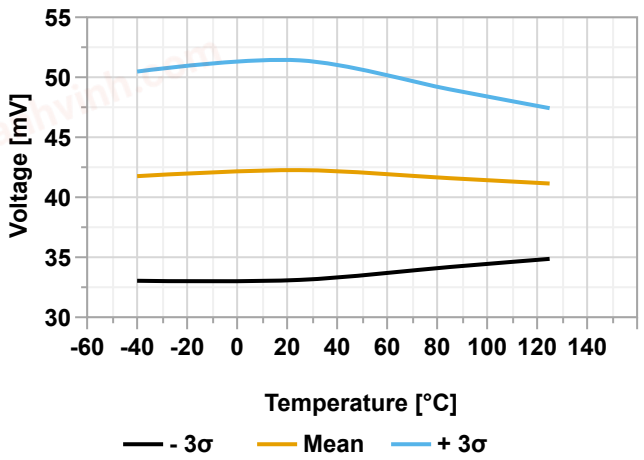

Figure 38-63. BOD Hysteresis vs. Temperature (BODCFG.LVL = 0x01)

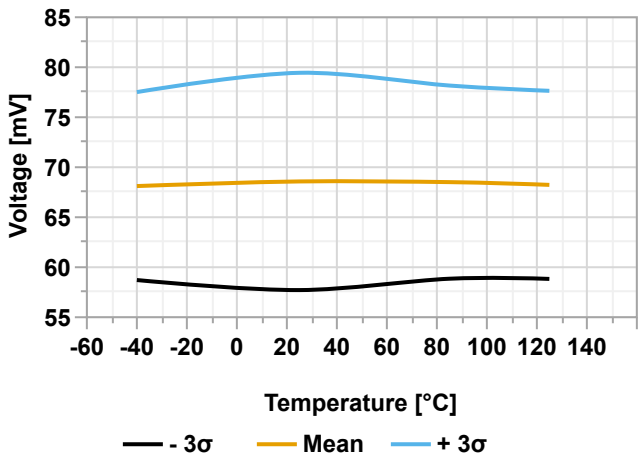

Figure 38-64. BOD Hysteresis vs. Temperature (BODCFG.LVL = 0x02)

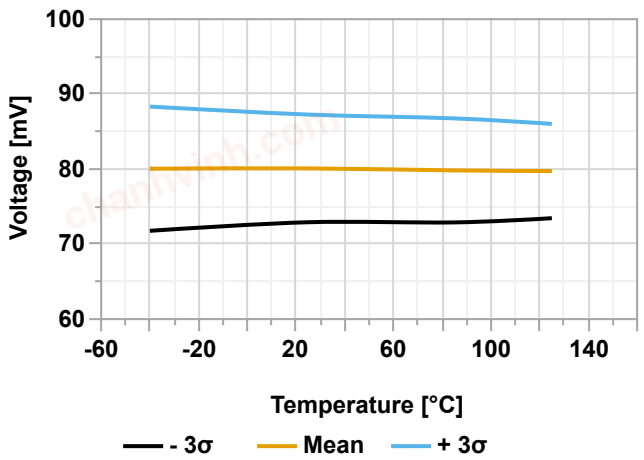

Figure 38-65. BOD Hysteresis vs. Temperature (BODCFG.LVL = 0x03)

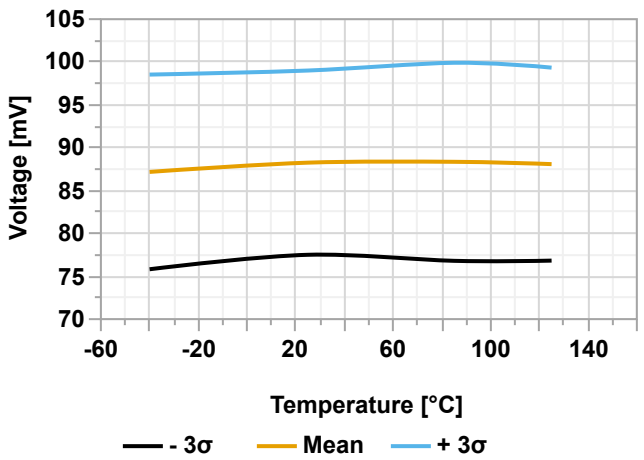

© 2021 Microchip Technology Inc. and its subsidiaries

chanhvinh.com

Figure 38-66. VLM Threshold vs. Temperature (VLMCTRL.VLMLVL = 0x01)

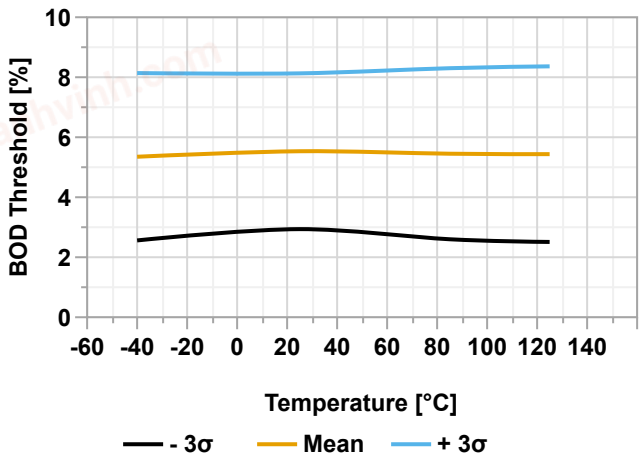

Figure 38-67. VLM Threshold vs. Temperature (VLMCTRL.VLMLVL = 0x02)

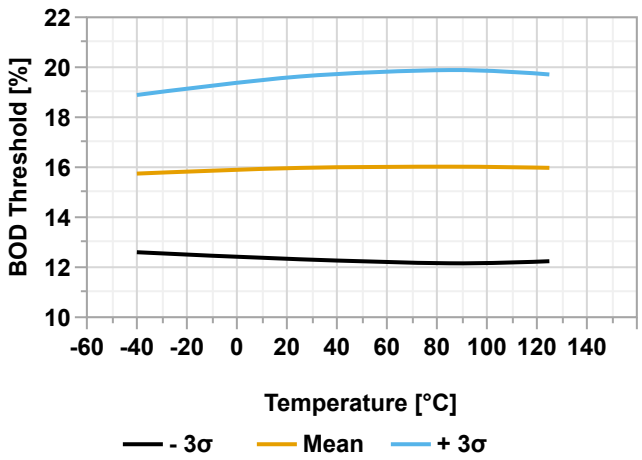

Figure 38-68. VLM Threshold vs. Temperature (VLMCTRL.VLMLVL = 0x03)

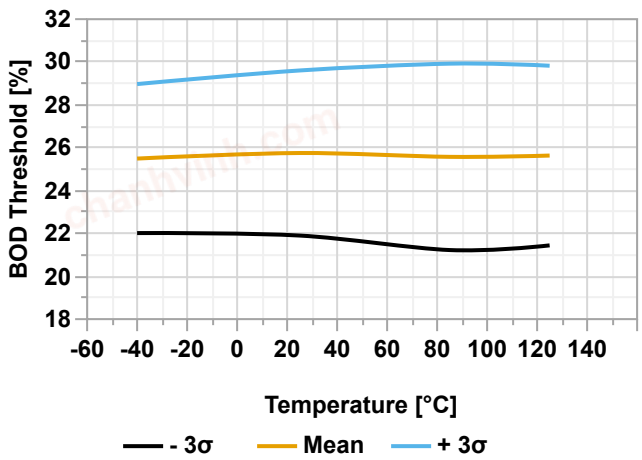

chanhvinh.com

38.5 I/O Pins

Figure 38-69. Fall Time vs. V_{DD} (PORTCTRL.SRL = 0x00)

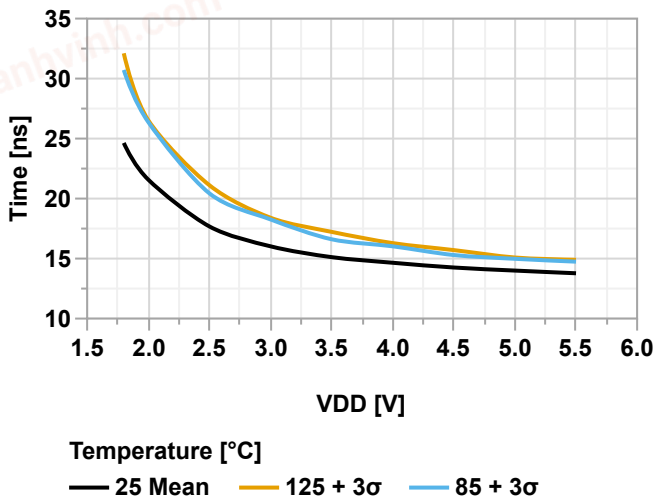

Figure 38-70. Fall Time vs. V_{DD} (PORTCTRL.SRL = 0x01)

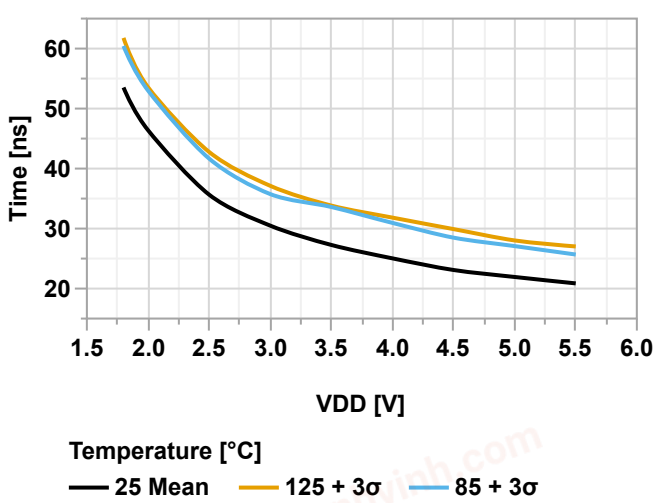

Figure 38-71. Rise Time vs. V_{DD} (PORTCTRL.SRL = 0x00)

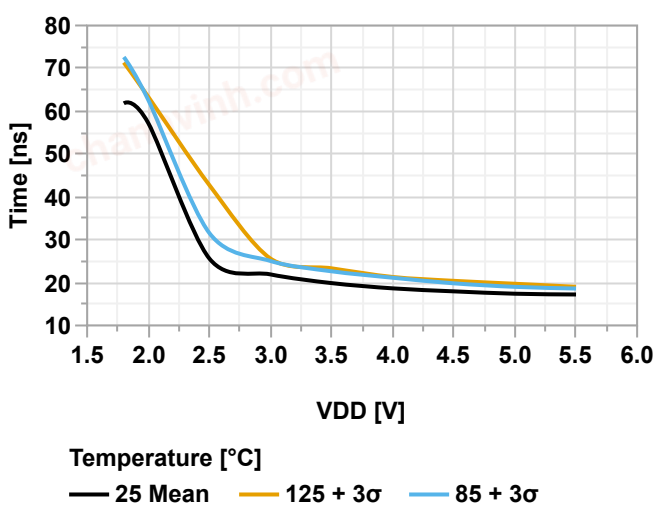

Figure 38-72. Rise Time vs. V_{DD} (PORTCTRL.SRL = 0x01)

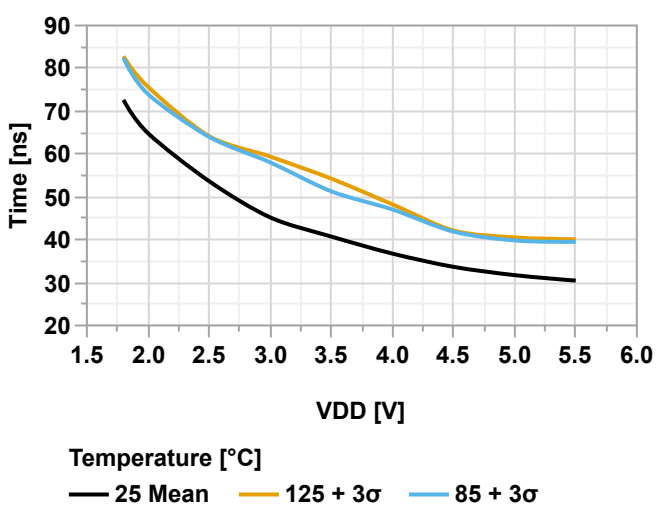

chanhvinh.com

Figure 38-73. Input Pin with Schmitt Trigger - Maximum V_{IL} vs. V_{DD}

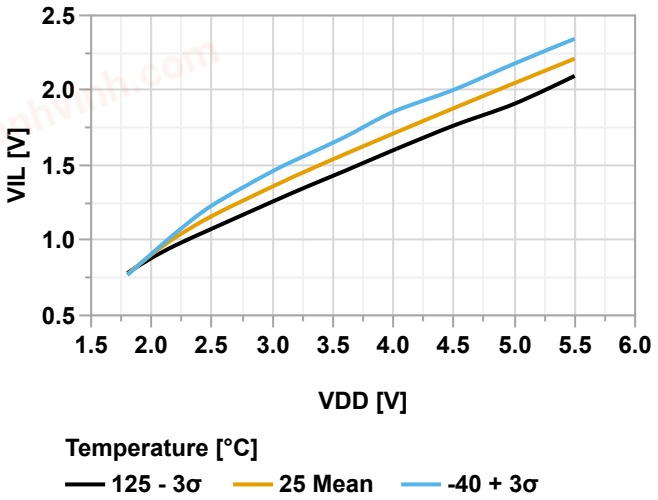

Figure 38-74. Input Pin with Schmitt Trigger - Minimum V_{IH} vs. V_{DD}

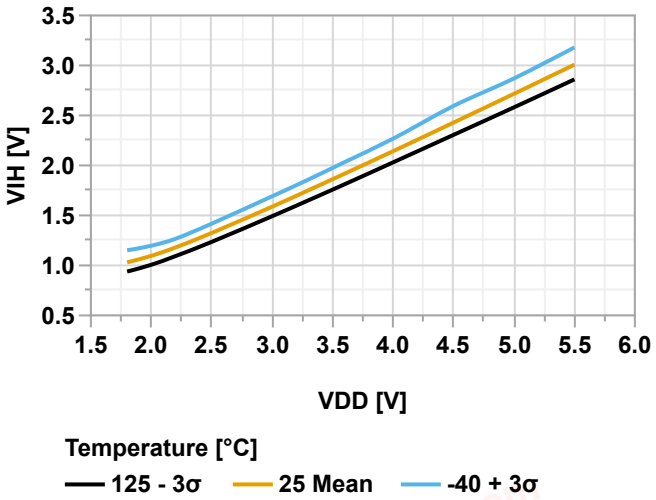

Figure 38-75. Input Pin with Schmitt Trigger - Hysteresis vs. V_{DD}

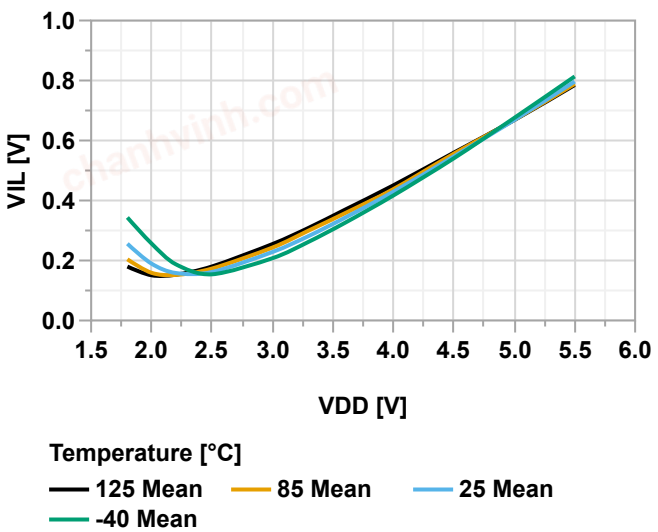

chanhvinh.com

Figure 38-76. Input Pin with I²C Trigger - Maximum V_{IL} vs. V_{DD}

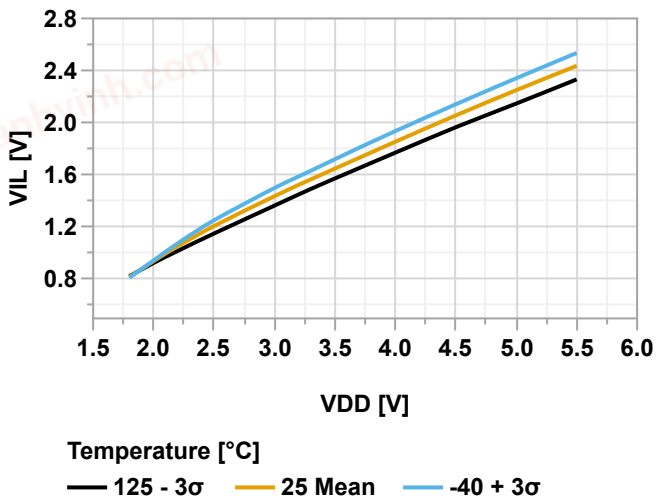

Figure 38-77. Input Pin with I²C Trigger - Minimum V_{IH} vs. V_{DD}

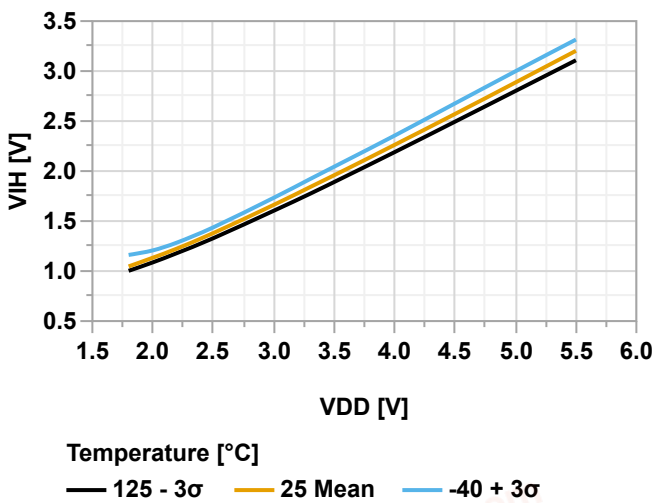

Figure 38-78. Input Pin SMBus - Maximum V_{IL} vs. V_{DD}

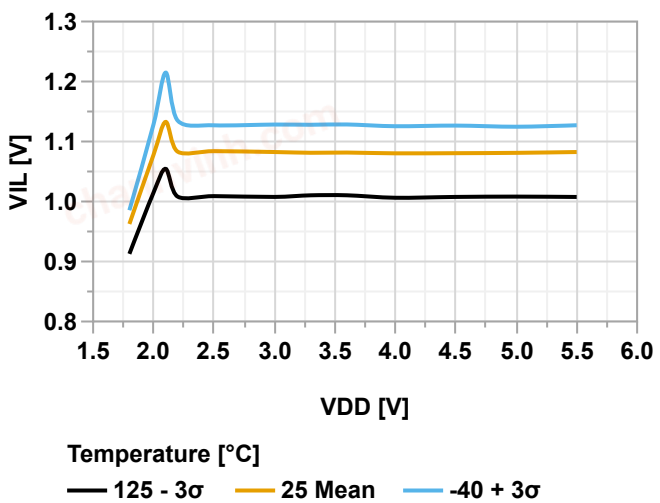

Figure 38-79. Input Pin SMBus - Minimum V_{IH} vs. V_{DD}

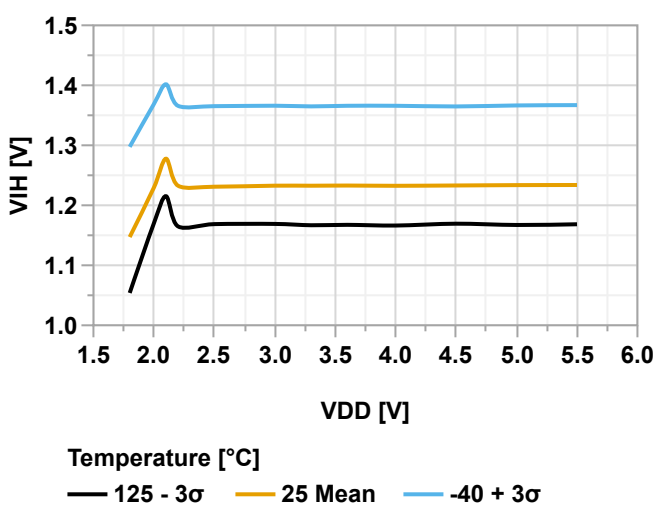

chanhvinh.com

chanhvinh.com

Figure 38-80. Reset Pin V_{IL} vs. V_{DD}

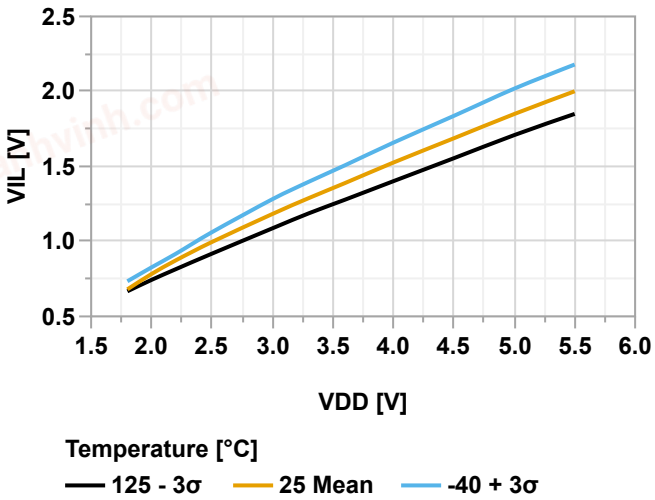

Figure 38-81. Reset Pin V_{IH} vs. V_{DD}

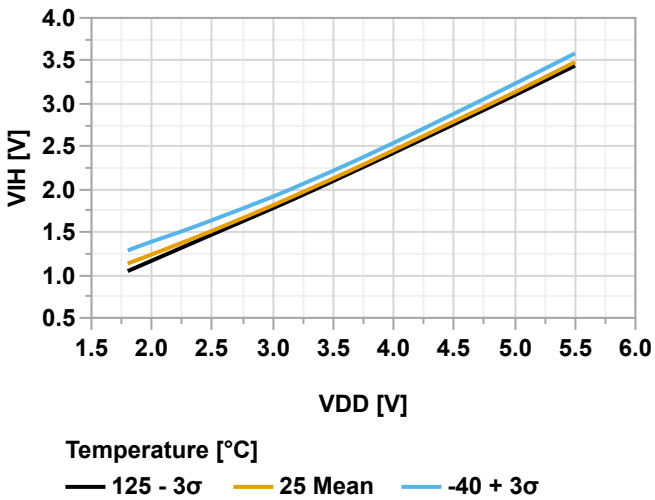

Figure 38-82. Weak Pull-Up Current vs. V_{DD}

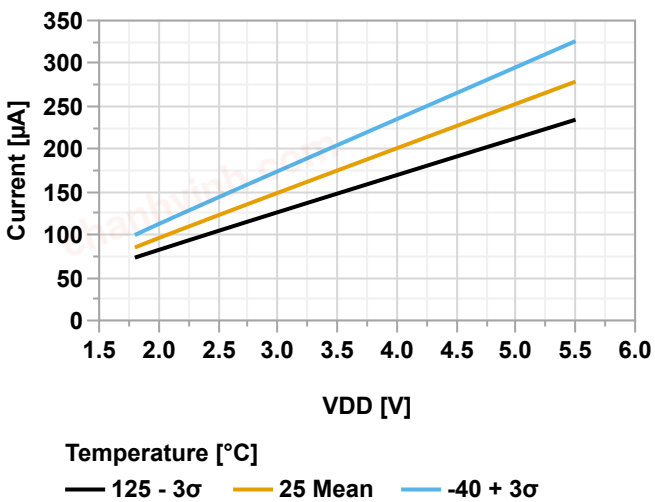

chanhvinh.com

chanhvinh.com

Figure 38-83. Output Pin - Maximum V_{OL} vs. Current, V_{DD} = 1.8V

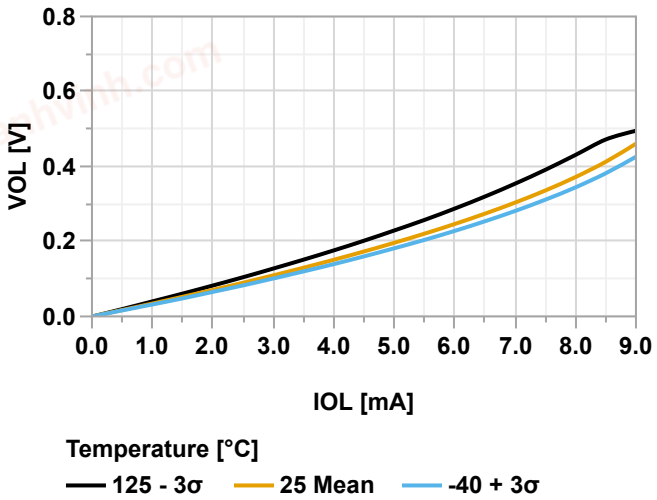

Figure 38-84. Output Pin - Minimum V_{OH} vs. Current, V_{DD} = 1.8V

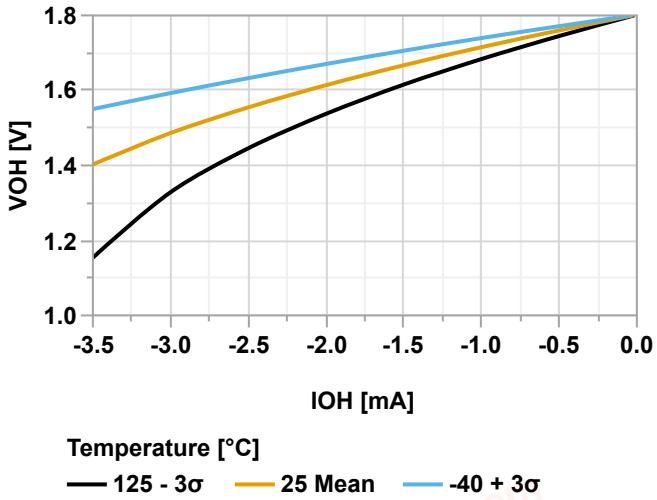

Figure 38-85. Output Pin - Maximum V_{OL} vs. Current, V_{DD} = 3.0V

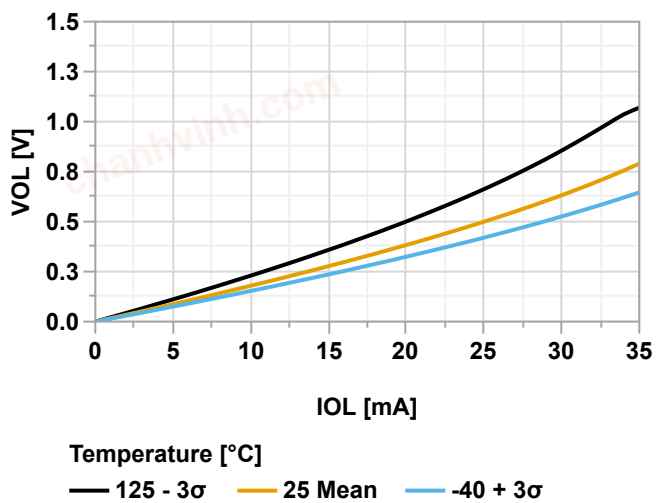

Figure 38-86. Output Pin - Minimum V_{OH} vs. Current, V_{DD} = 3.0V

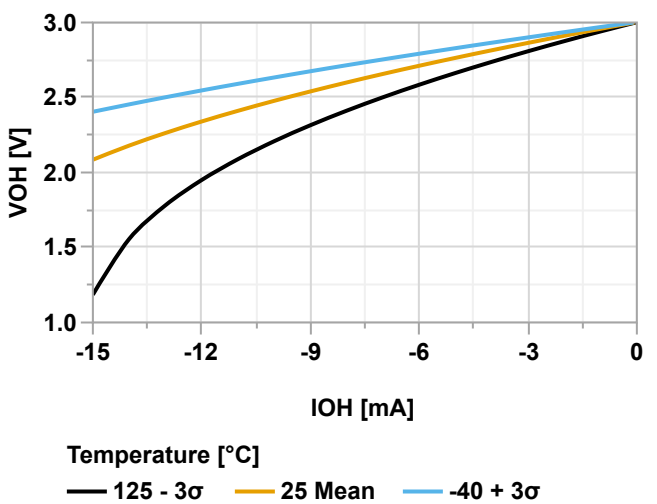

chanhvinh.com

Figure 38-87. Output Pin - Maximum V_{OL} vs. Current, V_{DD} = 5.5V

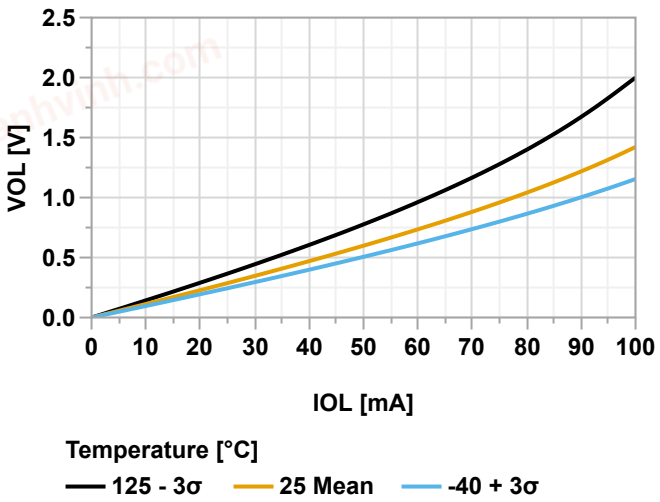

Figure 38-88. Output Pin - Minimum V_{OH} vs. Current, V_{DD} = 5.5V

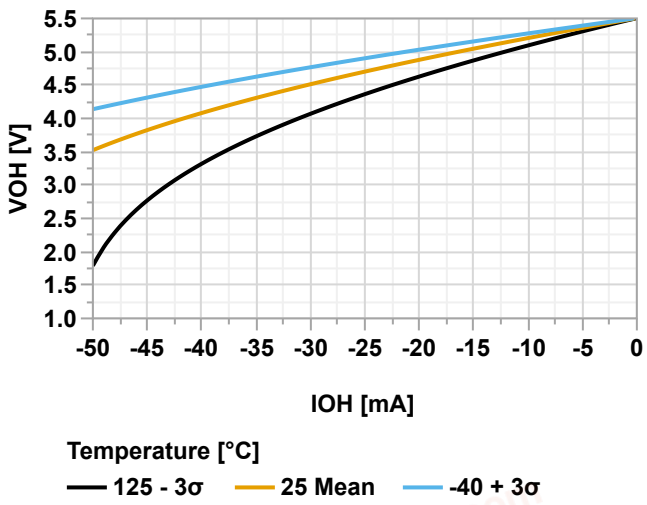

38.6 VREF

Figure 38-89. VREF Start-up Time vs. V_{DD}

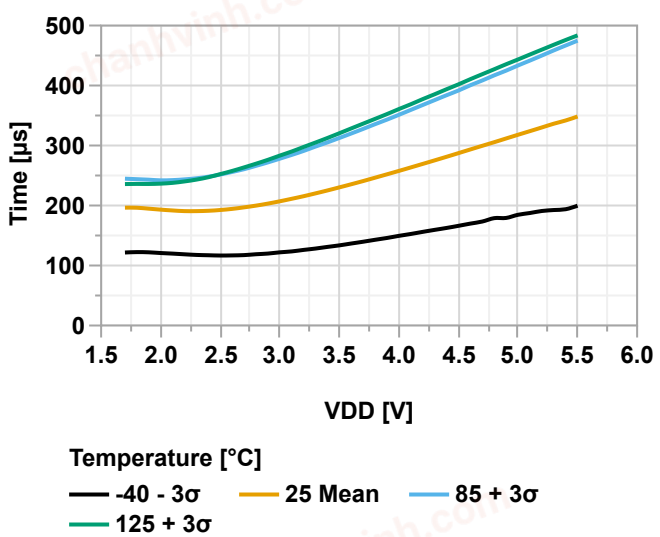

chanhvinh.com

38.6.1 ADC0REF

Figure 38-90. ADC0REF Voltage Error vs. Temperature (V_{DD} = 5.5V, V_{VREF} = 1.024V)

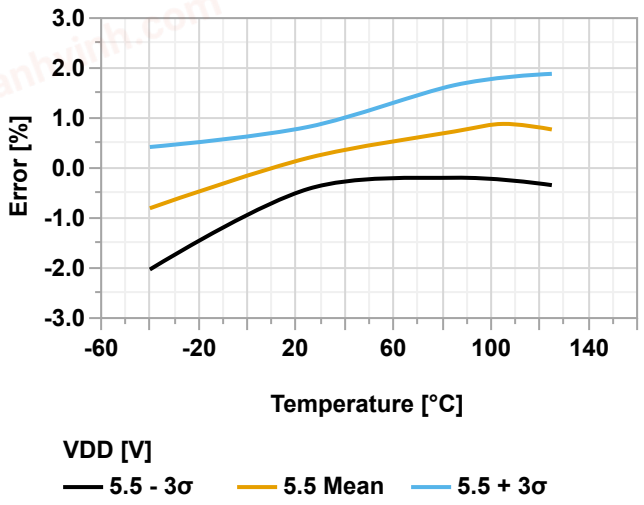

Figure 38-91. ADC0REF Voltage Error vs. Temperature (V_{DD} = 3.0V, V_{VREF} = 1.024V)

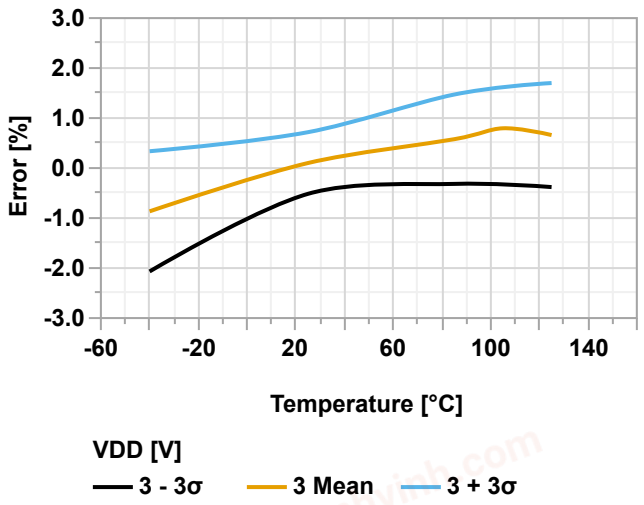

Figure 38-92. ADC0REF Voltage Error vs. Temperature (V_{DD} = 5.5V, V_{VREF} = 2.048V)

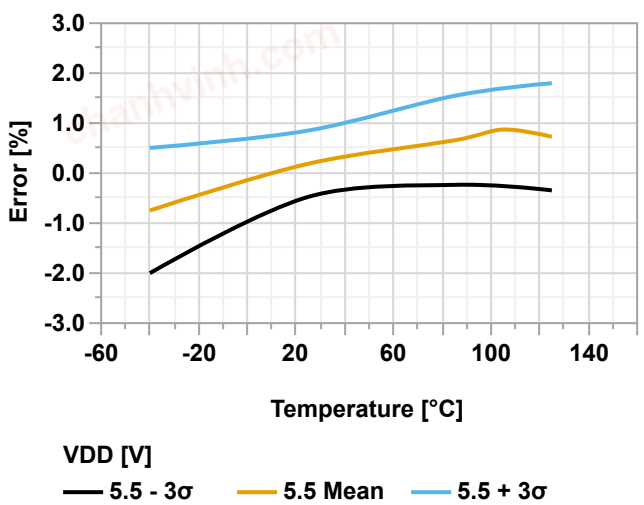

Figure 38-93. ADC0REF Voltage Error vs. Temperature (V_{DD} = 3.0V, V_{VREF} = 2.048V)

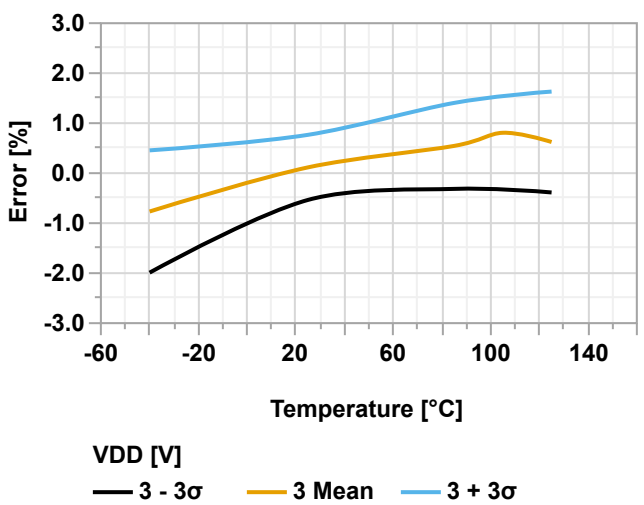

chanhvinh.com

Figure 38-94. ADC0REF Voltage Error vs. Temperature (V_{DD} = 5.5V, V_{REF} = 2.5V)

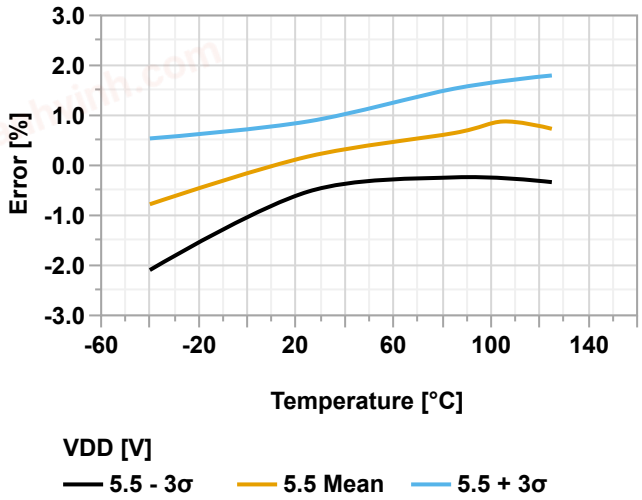

Figure 38-95. ADC0REF Voltage Error vs. Temperature (V_{DD} = 3.0V, V_{REF} = 2.5V)

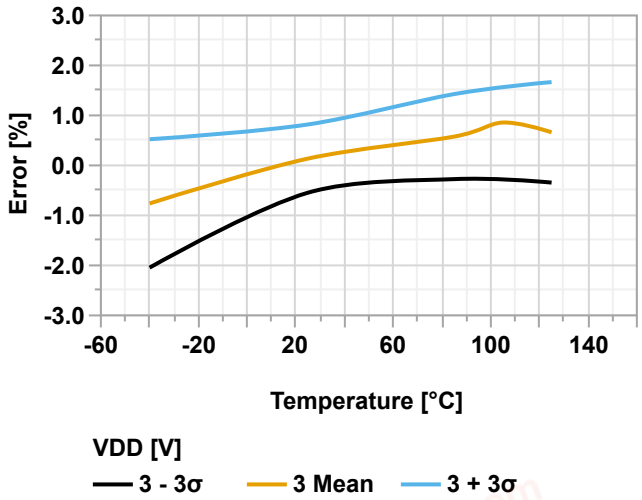

Figure 38-96. ADC0REF Voltage Error vs. Temperature (V_{DD} = 5.5V, V_{REF} = 4.096V)

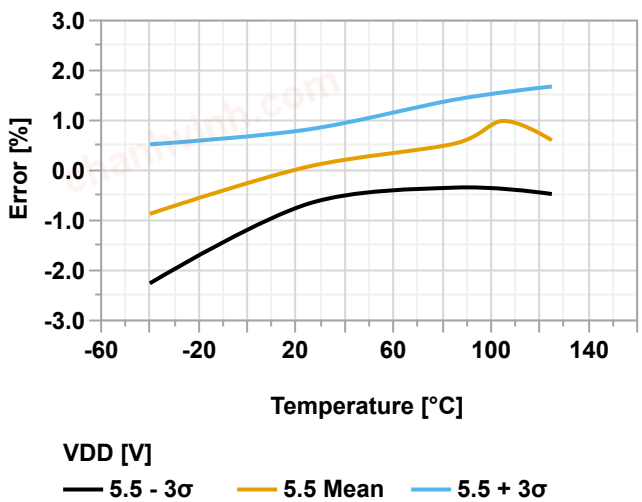

chanhvinh.com

38.6.2 ACREF

Figure 38-97. ACREF Voltage Error vs. Temperature (V_{DD} = 5.5V, V_{VREF} = 1.024V)

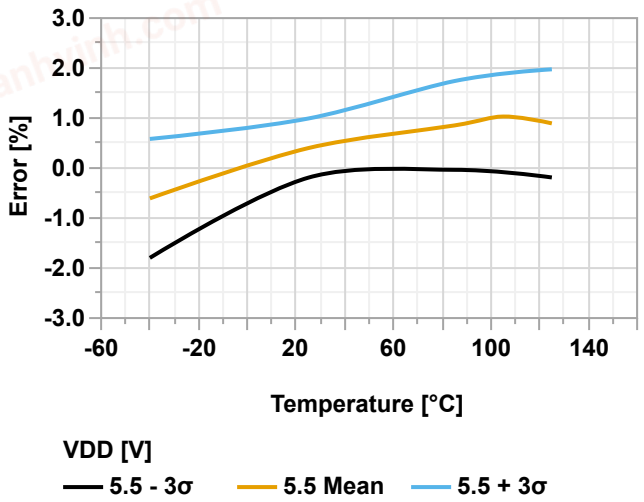

Figure 38-98. ACREF Voltage Error vs. Temperature (V_{DD} = 3.0V, V_{VREF} = 1.024V)

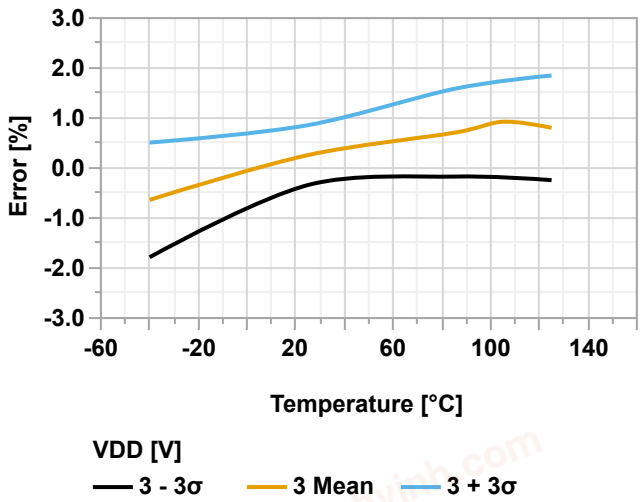

Figure 38-99. ACREF Voltage Error vs. Temperature (V_{DD} = 5.5V, V_{VREF} = 2.048V)

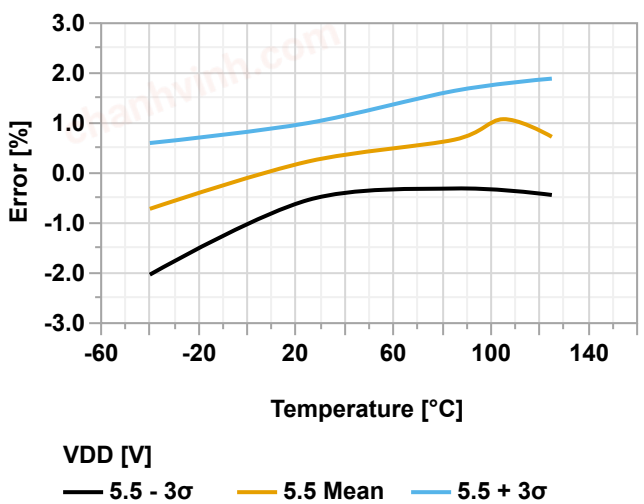

Figure 38-100. ACREF Voltage Error vs. Temperature (V_{DD} = 3.0V, V_{VREF} = 2.048V)

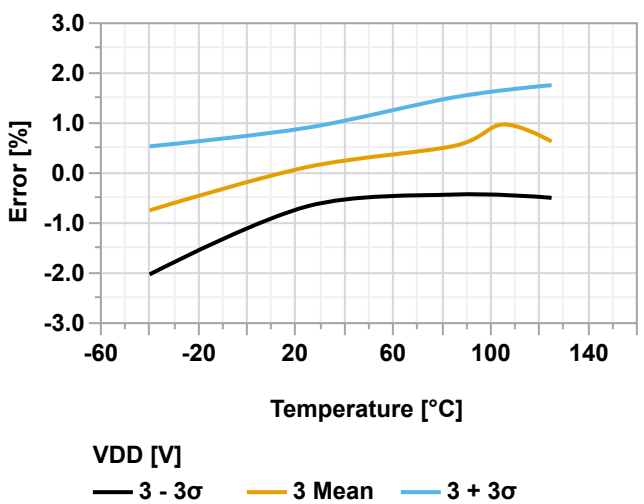

chanhvinh.com

chanhvinh.com

Figure 38-101. ACREF Voltage Error vs. Temperature (V_{DD} = 5.5V, V_{VREF} = 2.5V)

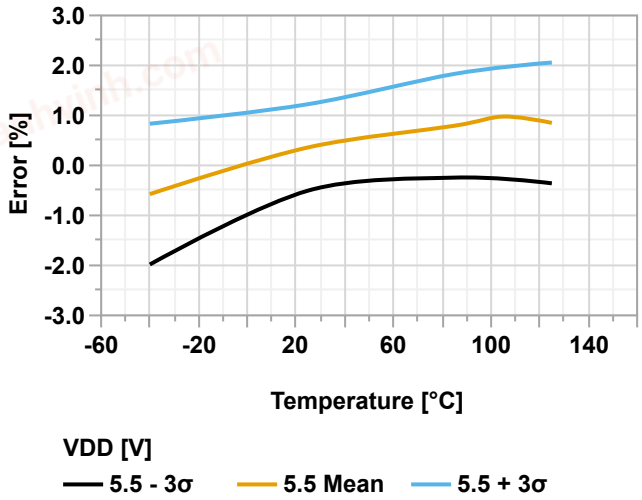

Figure 38-102. ACREF Voltage Error vs. Temperature (V_{DD} = 3.0V, V_{VREF} = 2.5V)

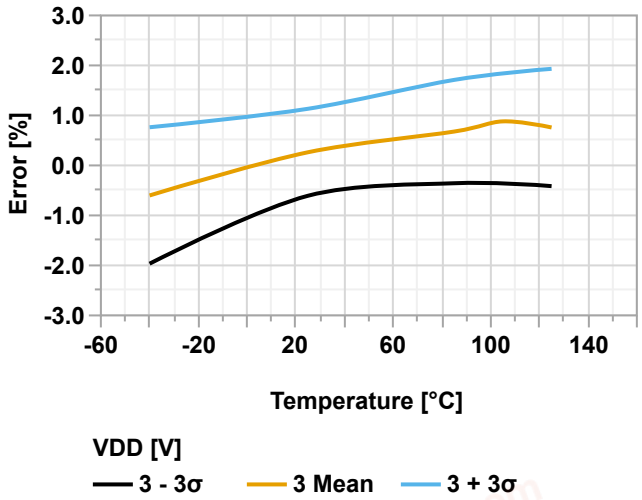

Figure 38-103. ACREF Voltage Error vs. Temperature (V_{DD} = 5.5V, V_{VREF} = 4.096V)

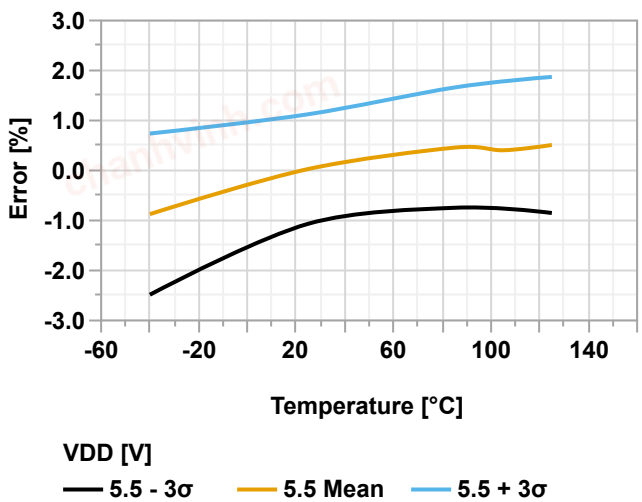

chanhvinh.com

38.6.3 DACREF

Figure 38-104. DACREF Voltage Error vs. Temperature (V_{DD} = 5.5V, V_{VREF} = 1.024V)

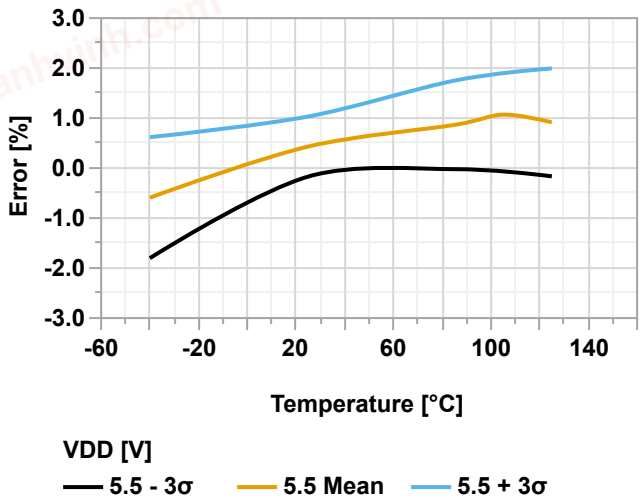

Figure 38-105. DACREF Voltage Error vs. Temperature (V_{DD} = 3.0V, V_{VREF} = 1.024V)

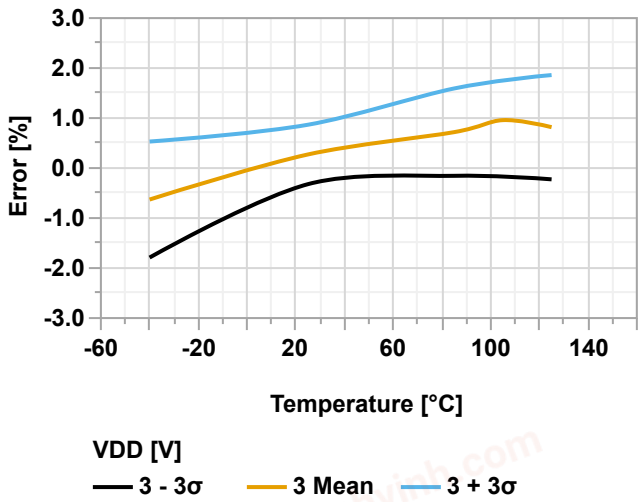

Figure 38-106. DACREF Voltage Error vs. Temperature (V_{DD} = 5.5V, V_{VREF} = 2.048V)

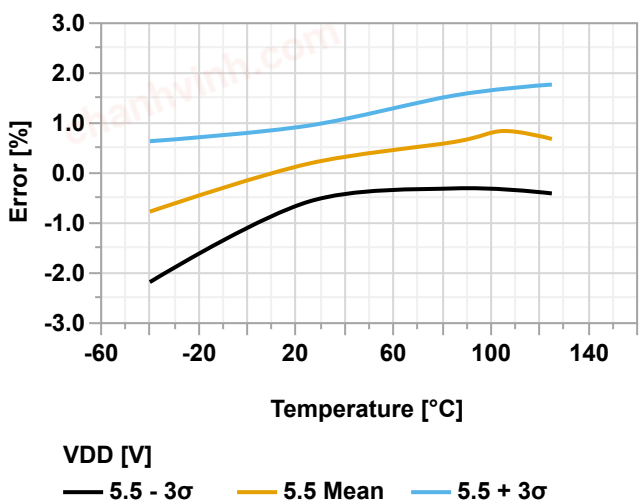

Figure 38-107. DACREF Voltage Error vs. Temperature (V_{DD} = 3.0V, V_{VREF} = 2.048V)

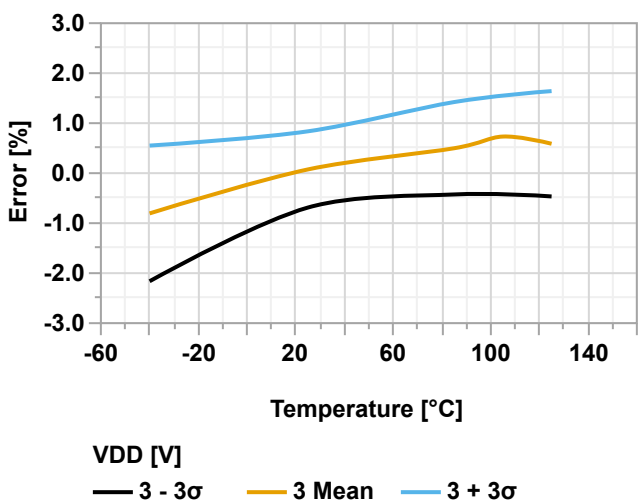

© 2021 Microchip Technology Inc.
and its subsidiaries

chanhvinh.com

Figure 38-108. DACREF Voltage Error vs. Temperature (V_{DD} = 5.5V, V_{VREF} = 2.5V)

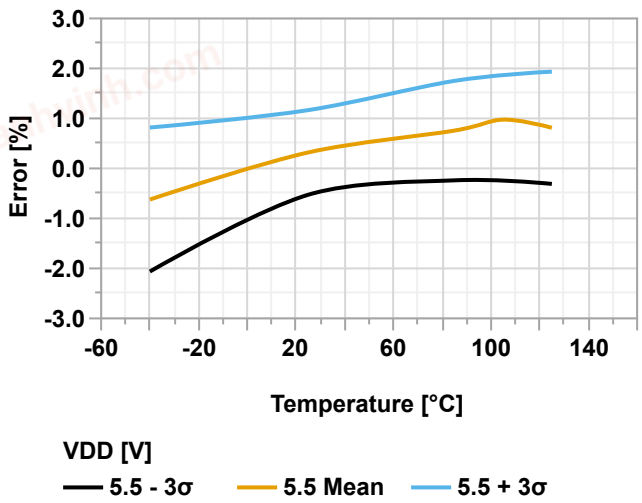

Figure 38-109. DACREF Voltage Error vs. Temperature (V_{DD} = 3.0V, V_{VREF} = 2.5V)

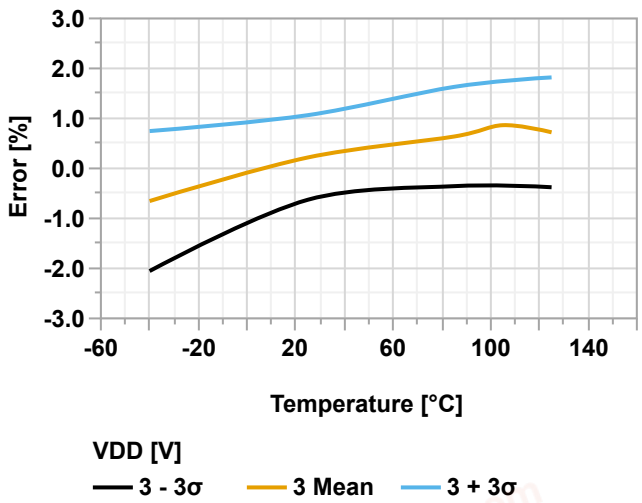

Figure 38-110. DACREF Voltage Error vs. Temperature (V_{DD} = 5.5V, V_{VREF} = 4.096V)

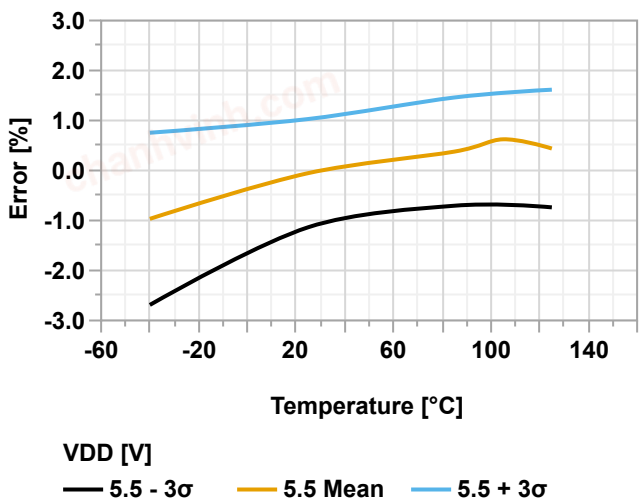

chanhvinh.com

38.7 ADC

38.7.1 ADC - 12-Bit Single Ended Mode

Figure 38-111. Gain Error vs. V_{REFA} (ADC Single Ended Mode @60 ksps, V_{DD} = 3.0V)

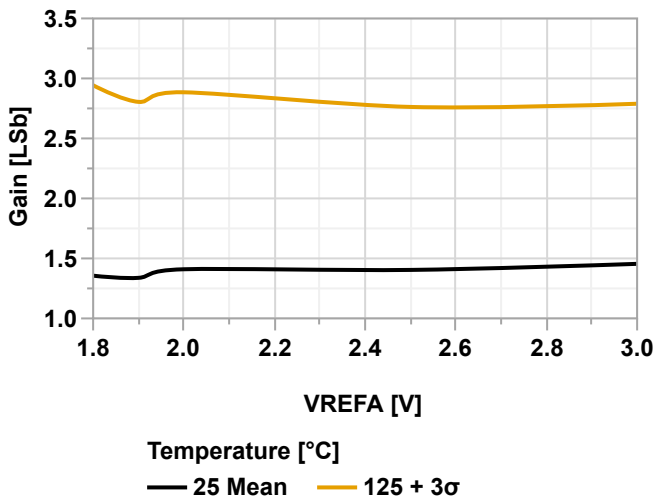

Figure 38-112. Gain Error vs. Sample Rate (ADC Single Ended Mode, V_{REFA} = V_{DD} = 3.0V)

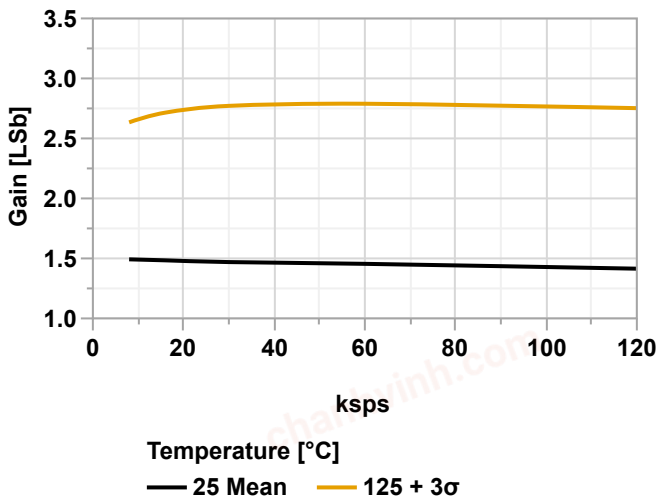

Figure 38-113. Offset Error vs. V_{REFA} (ADC Single Ended Mode @60 ksps, V_{DD} = 3.0V)

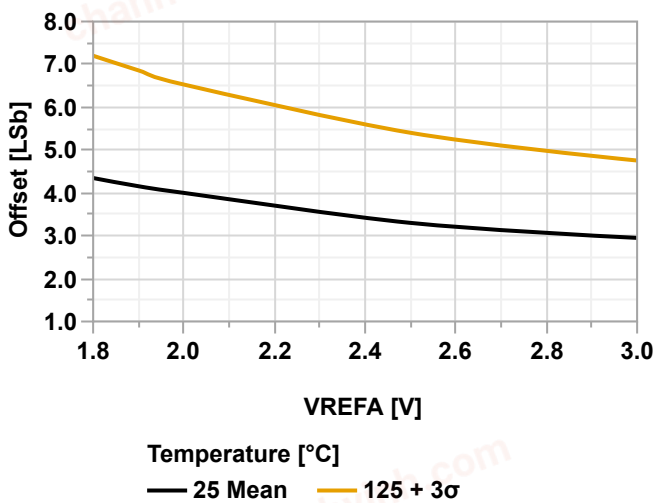

Figure 38-114. Offset Error vs. Sample Rate (ADC Single Ended Mode, V_{REFA} = V_{VDD} = 3.0V)

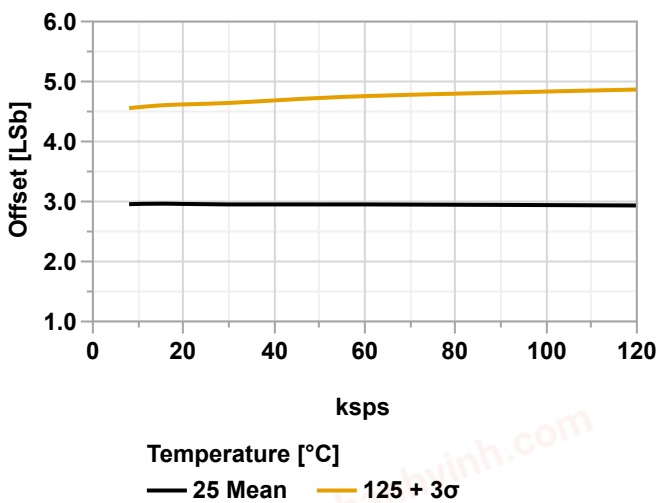

chanhvinh.com

Figure 38-115. DNL vs. ADC code (ADC Single Ended Mode @60 ksps, V_{DD} = 3.0V)

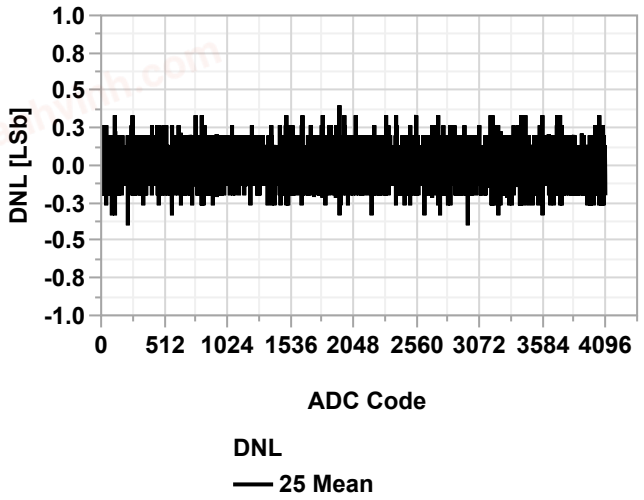

Figure 38-116. INL vs. ADC code (ADC Single Ended Mode @60 ksps, V_{DD} = 3.0V)

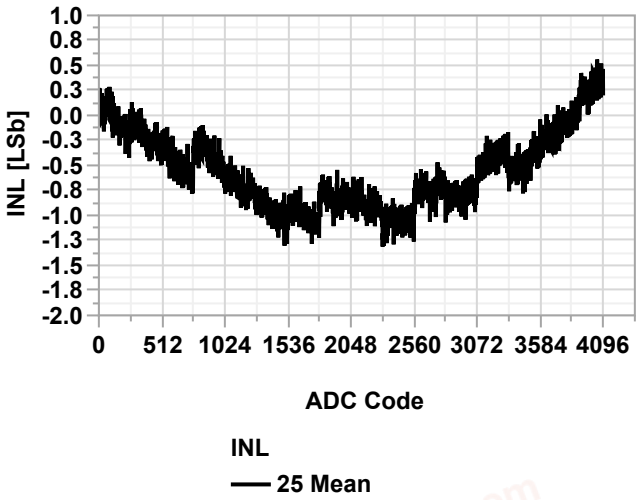

Figure 38-117. DNL vs. V_{REFA} (ADC Single Ended Mode @60 ksps, V_{DD} = 3.0V, T = 125°C)

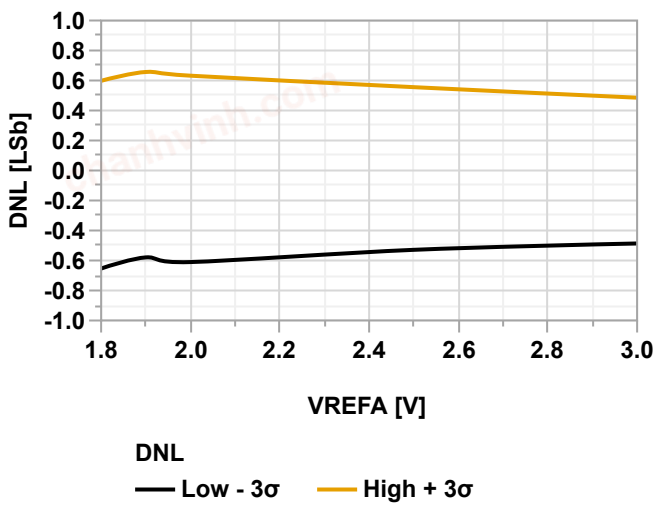

Figure 38-118. DNL vs. Sample Rate (ADC Single Ended Mode, V_{REFA} = V_{DD} = 3.0V, T = 125°C)

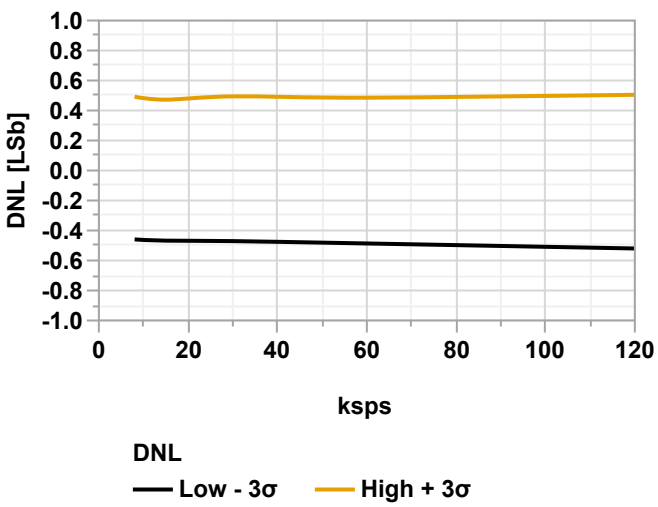

chanhvinh.com

Figure 38-119. INL vs. V_{REFA} (ADC Single Ended Mode @60 ksps, V_{DD} = 3.0V, T = 125°C)

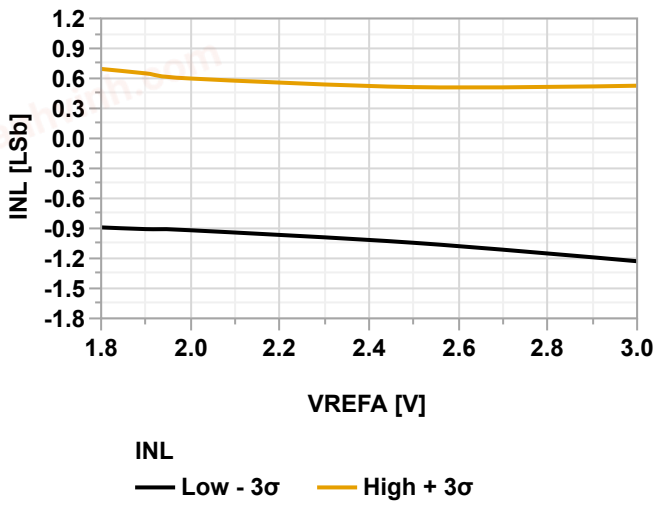

Figure 38-120. INL vs. Sample Rate (ADC Single Ended Mode, V_{REFA} = V_{DD} = 3.0V, T = 125°C)

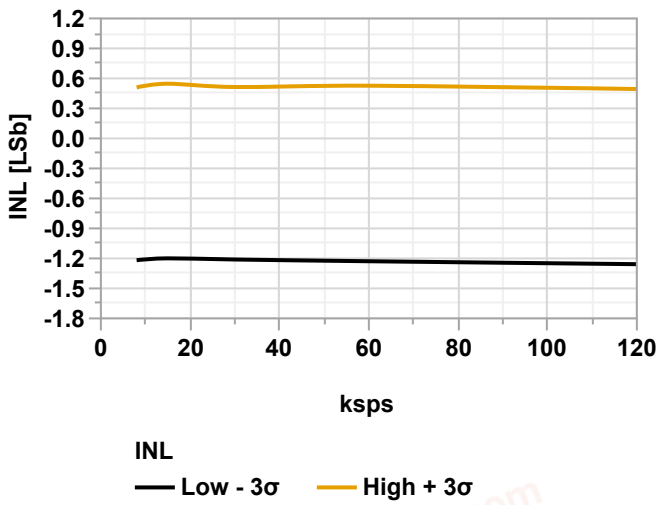

38.7.2 ADC - 12-Bit Differential Mode

Figure 38-121. Positive Gain Error vs. V_{REFA} (ADC Differential Mode @60 ksps, V_{DD} = 3.6V)

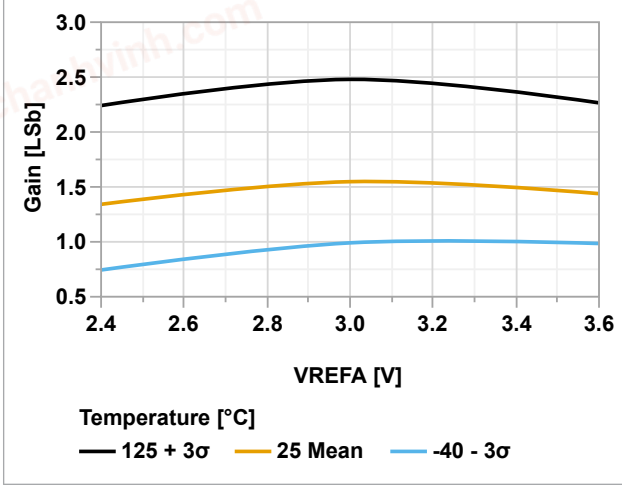

Figure 38-122. Positive Gain Error vs. Sample Rate (ADC Differential Mode, V_{REFA} = V_{DD} = 3.6V)

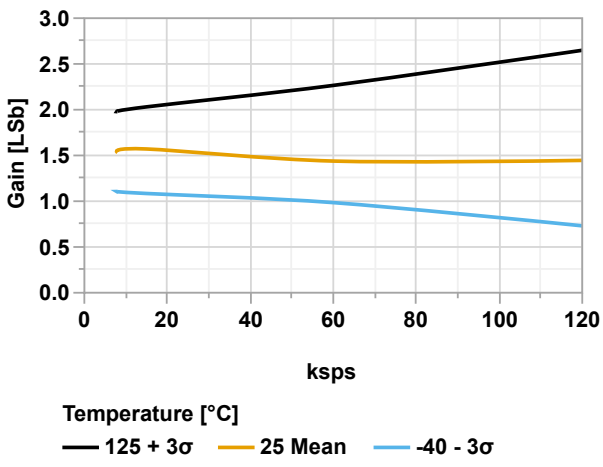

chanhvinh.com

Figure 38-123. Negative Gain Error vs. V_{REFA} (ADC Differential Mode @60 ksps, V_{DD} = 3.6V)

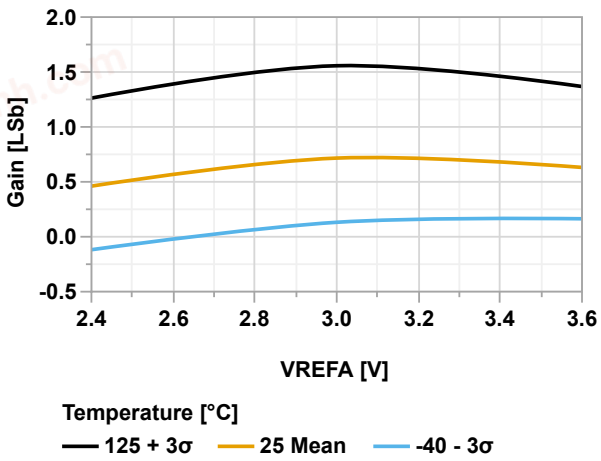

Figure 38-124. Negative Gain Error vs. Sample Rate (ADC Differential Mode, V_{REFA} = V_{DD} = 3.6V)

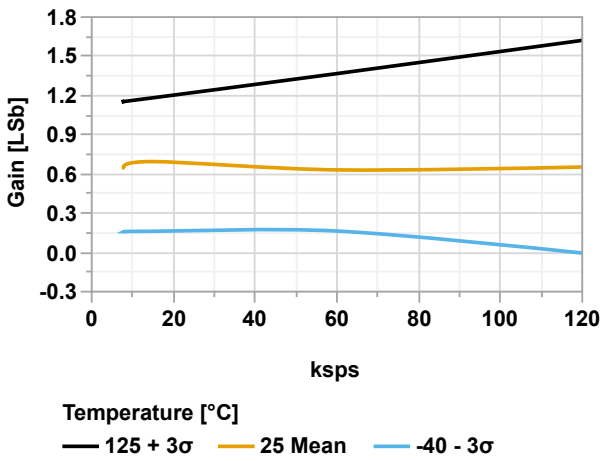

Figure 38-125. Offset Error vs. V_{REFA} (ADC Differential Mode @60 ksps, V_{DD} = 3.6V)

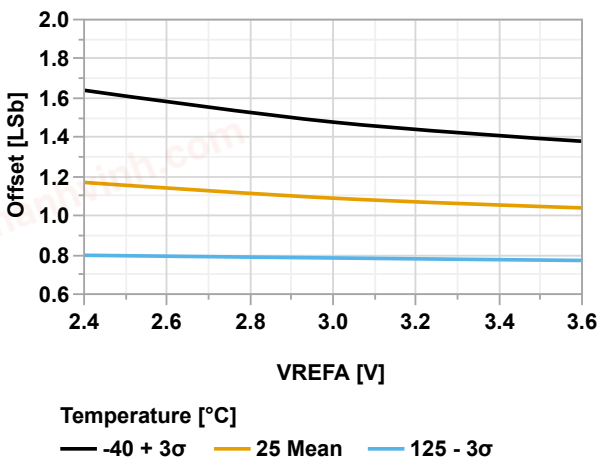

Figure 38-126. Offset Error vs. Sample Rate (ADC Differential Mode, V_{REFA} = V_{DD} = 3.6V)

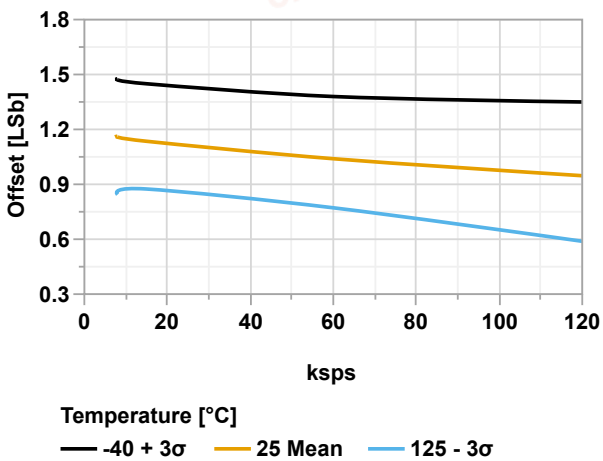

chanhvinh.com

Figure 38-127. DNL vs. V_{REFA} (ADC Differential Mode @60 ksps, V_{DD} = 3.6V, T = -40°C)

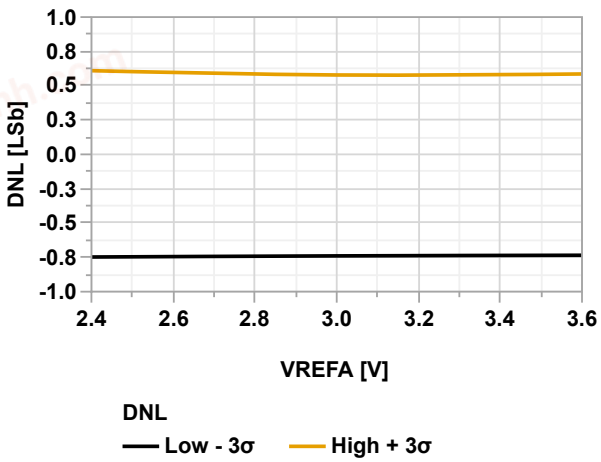

Figure 38-128. DNL vs. V_{REFA} (ADC Differential Mode @60 ksps, V_{DD} = 3.6V, T = 25°C)

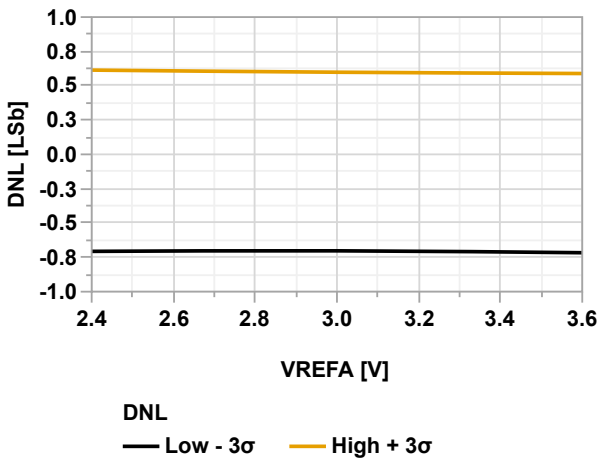

Figure 38-129. DNL vs. V_{REFA} (ADC Differential Mode @60 ksps, V_{DD} = 3.6V, T = 85°C)

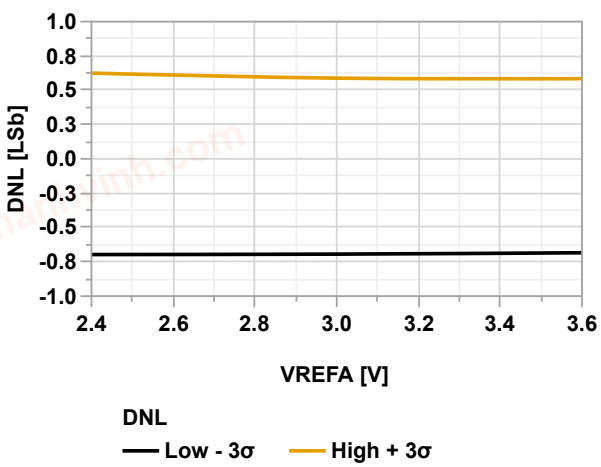

Figure 38-130. DNL vs. V_{REFA} (ADC Differential Mode @60 ksps, V_{DD} = 3.6V, T = 125°C)

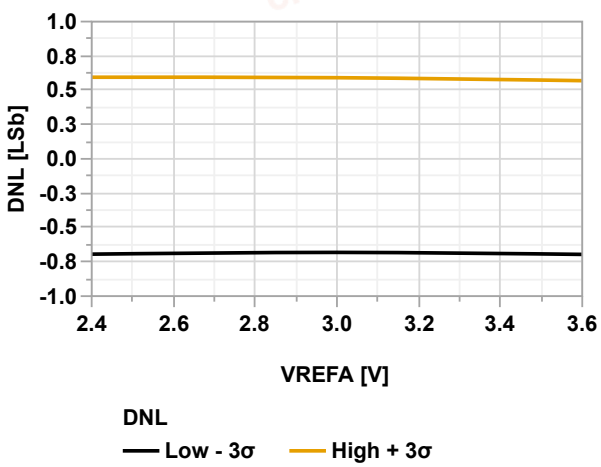

chanhvinh.com

Figure 38-131. INL vs. V_{REFA} (ADC Differential Mode @60 ksps, V_{DD} = 3.6V, T = -40°C)

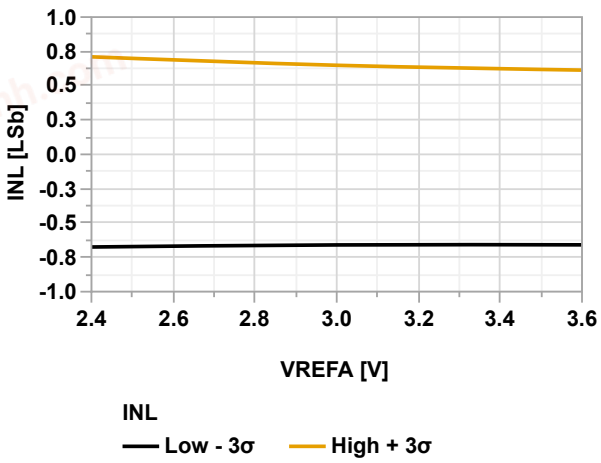

Figure 38-132. INL vs. V_{REFA} (ADC Differential Mode @60 ksps, V_{DD} = 3.6V, T = 25°C)

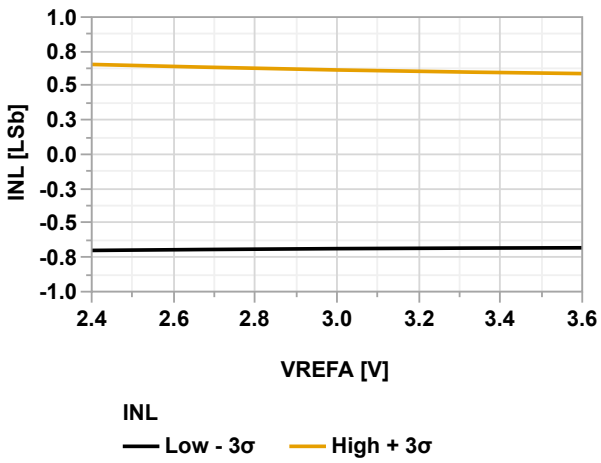

Figure 38-133. INL vs. V_{REFA} (ADC Differential Mode @60 ksps, V_{DD} = 3.6V, T = 85°C)

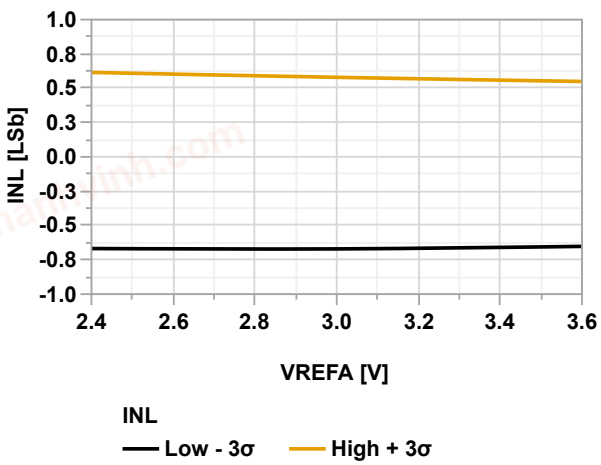

Figure 38-134. INL vs. V_{REFA} (ADC Differential Mode @60 ksps, V_{DD} = 3.6V, T = 125°C)

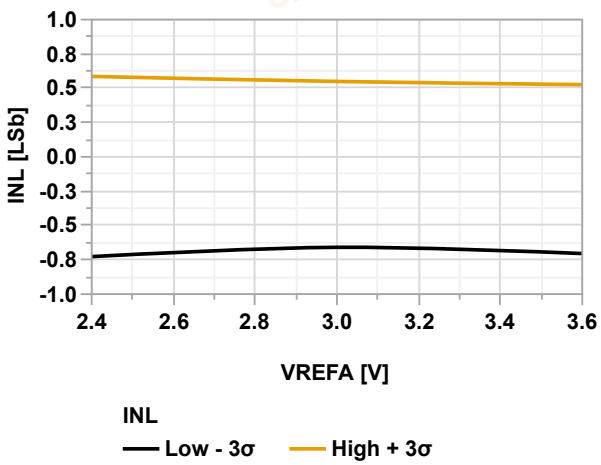

chanhvinh.com

chanhvinh.com

38.8 Temperature Sensor

Figure 38-135. Temperature Sensor Characteristics

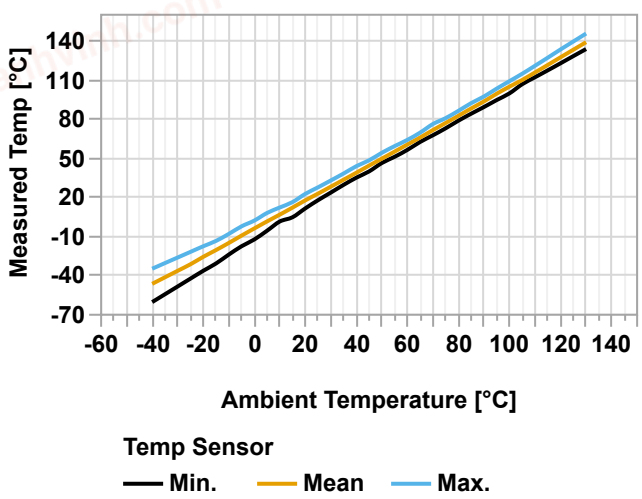

38.9 AC

Figure 38-136. Falling Edge Response Time vs. V_{DD} (V_{CM} = V_{DD}/2, CTRLA.POWER = 0x00)

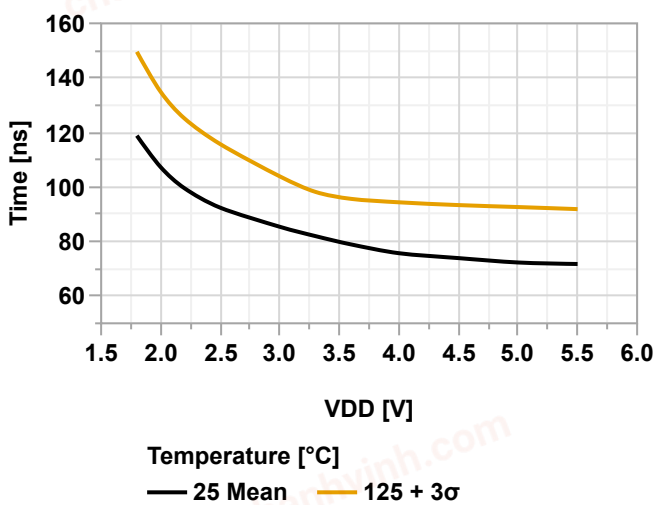

Figure 38-137. Rising Edge Response Time vs. V_{DD} (V_{CM} = V_{DD}/2, CTRLA.POWER = 0x00)

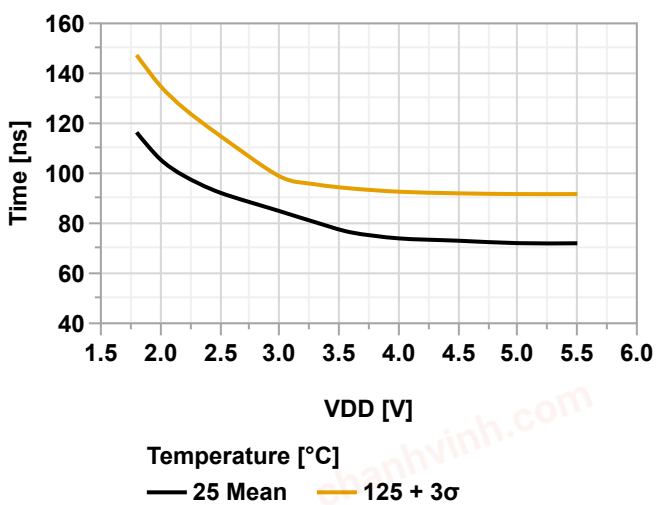

chanhvinh.com

Figure 38-138. Falling Edge Response Time vs. V_{DD} (V_{CM} = V_{DD}/2, CTRLA.POWER = 0x01)

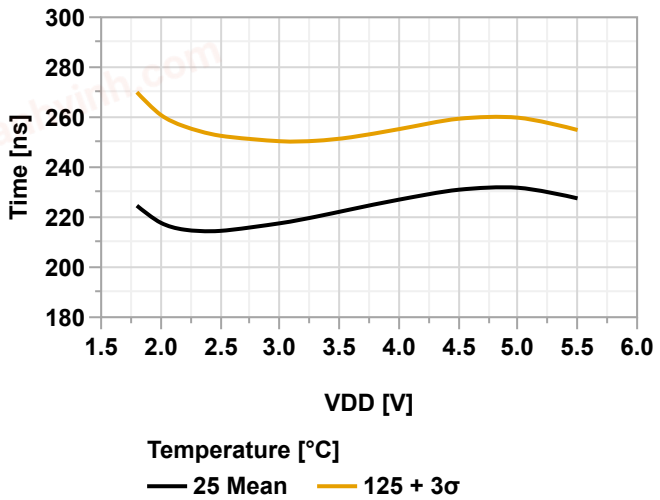

Figure 38-139. Rising Edge Response Time vs. V_{DD} (V_{CM} = V_{DD}/2, CTRLA.POWER = 0x01)

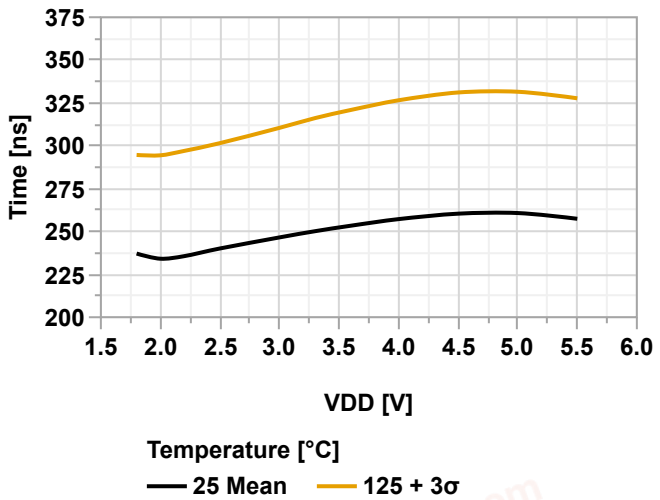

Figure 38-140. Falling Edge Response Time vs. V_{DD} (V_{CM} = V_{DD}/2, CTRLA.POWER = 0x02)

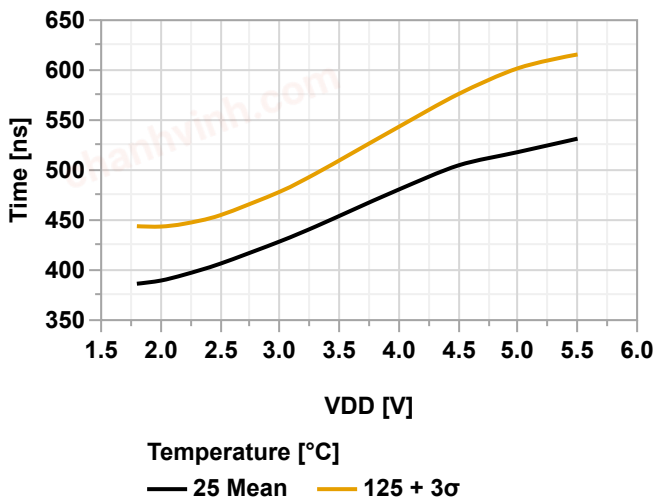

Figure 38-141. Rising Edge Response Time vs. V_{DD} (V_{CM} = V_{DD}/2, CTRLA.POWER = 0x02)

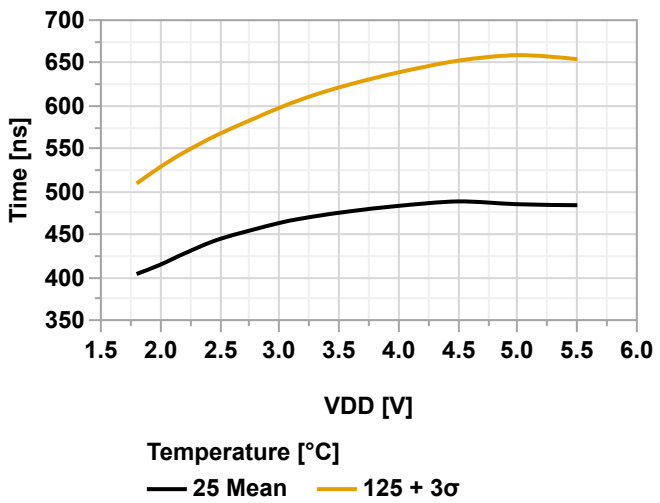

chanhvinh.com

chanhvinh.com

Figure 38-142. Input Offset vs. Common Mode Voltage (V_{DD} = 2.0V)

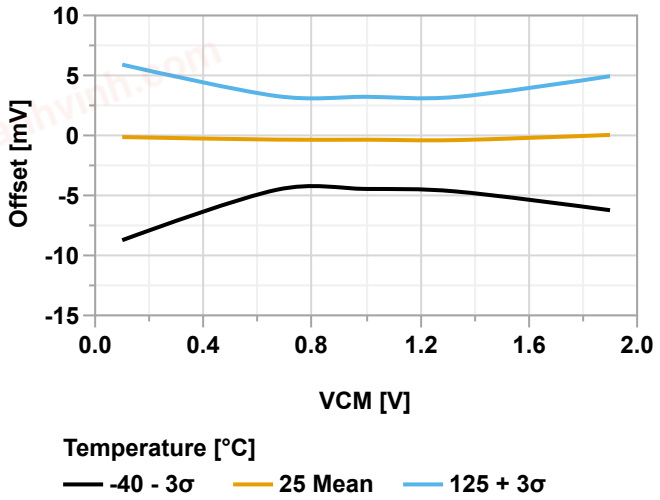

Figure 38-143. Input Hysteresis vs. Common Mode Voltage (V_{DD} = 2.0V)

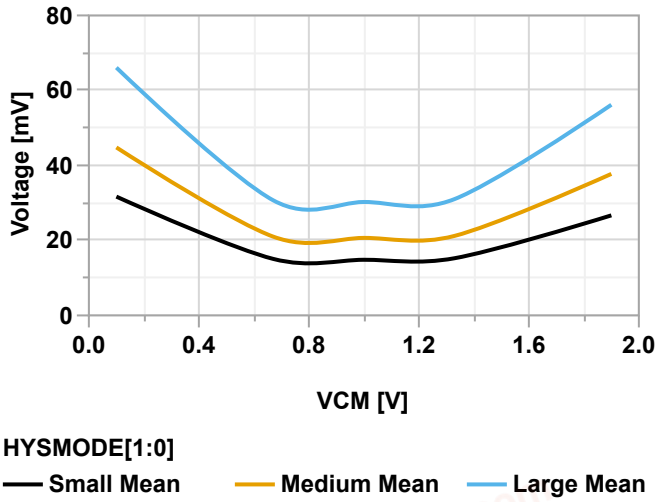

Figure 38-144. Input Offset vs. Common Mode Voltage (V_{DD} = 3.0V)

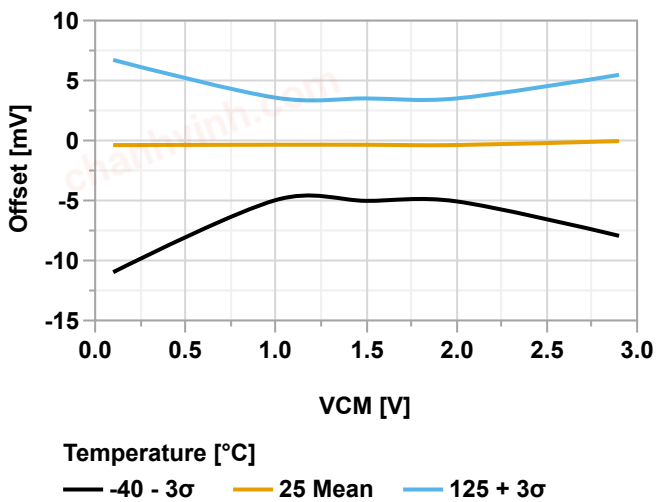

Figure 38-145. Input Hysteresis vs. Common Mode Voltage (V_{DD} = 3.0V)

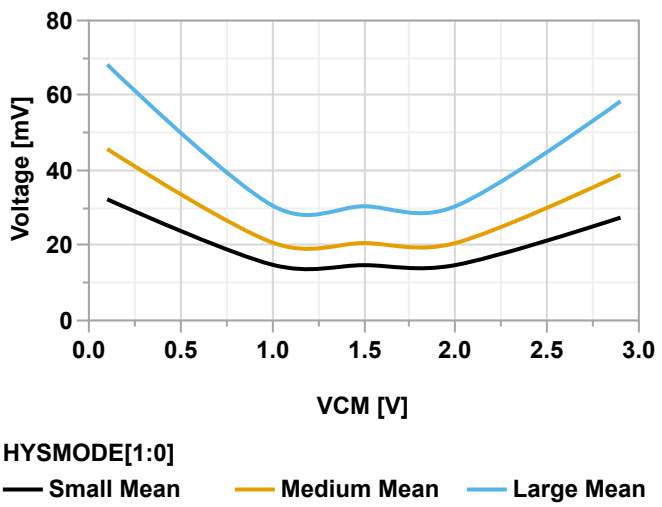

chanhvinh.com

chanhvinh.com

Figure 38-146. Input Offset vs. Common Mode Voltage (V_{DD} = 5.5V)

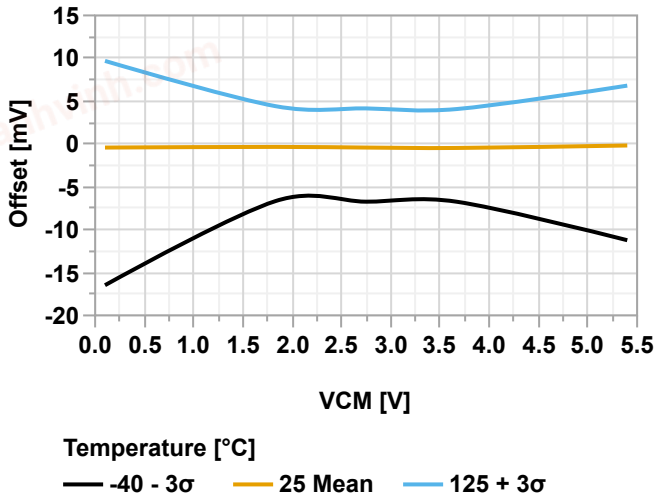

Figure 38-147. Input Hysteresis vs. Common Mode Voltage (V_{DD} = 5.5V)

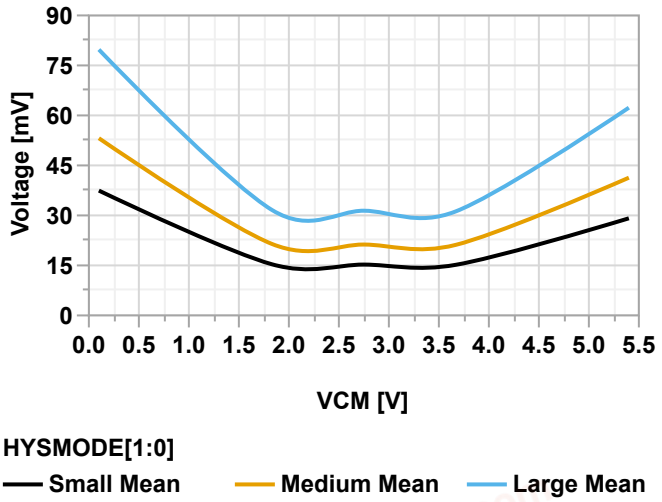

38.10 DAC

38.10.1 DAC - 10-Bit Mode

Figure 38-148. Gain Error vs. Temperature (V_{REFA} = V_{DD} = 3.0V)

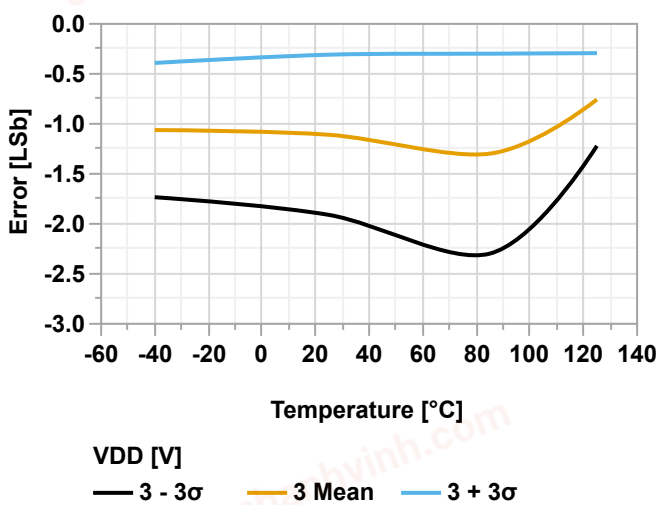

Figure 38-149. Gain Error vs. Temperature (V_{REFA} = V_{DD} = 5.5V)

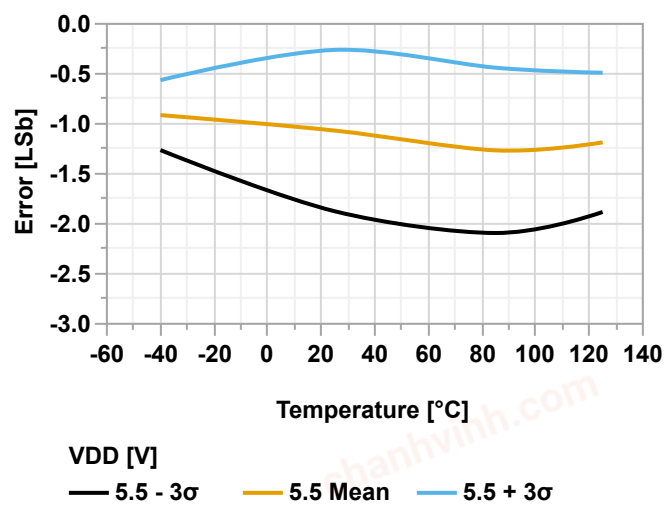

chanhvinh.com

Figure 38-150. Offset Error vs. Temperature (V_{REFA} = V_{DD} = 3.0V)

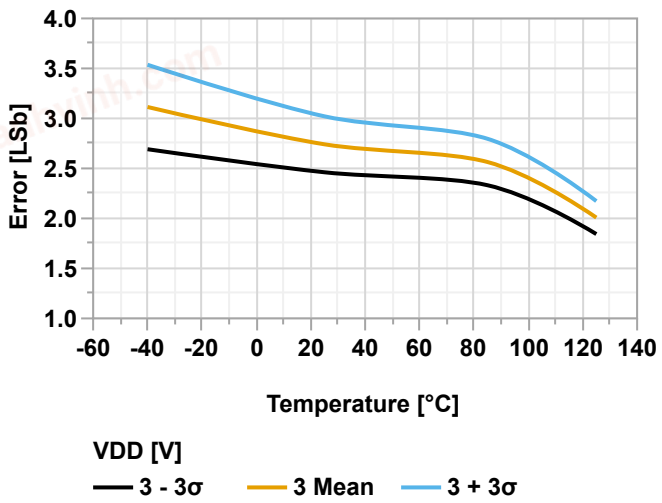

Figure 38-151. Offset Error vs. Temperature (V_{REFA} = V_{DD} = 5.5V)

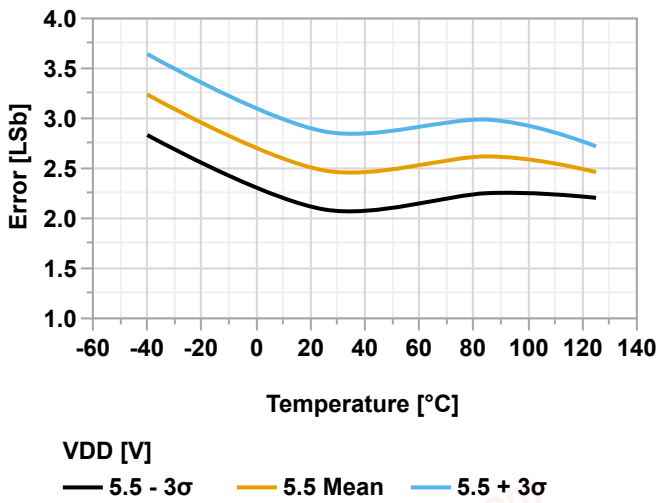

Figure 38-152. DNL vs. DAC Code (V_{REFA} = V_{DD} = 3.0V)

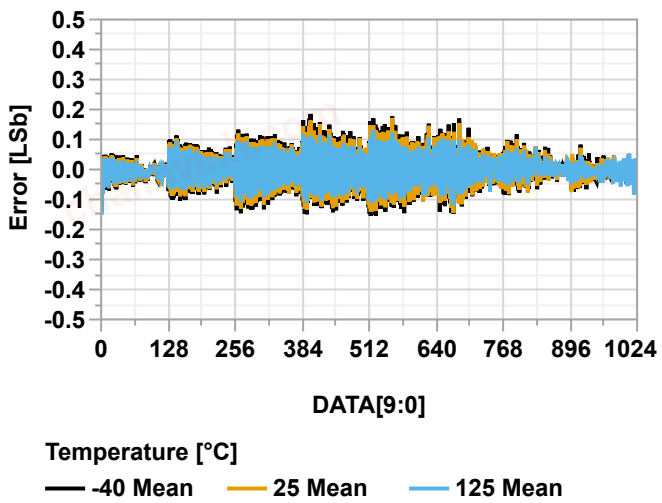

Figure 38-153. DNL vs. DAC Code (V_{REFA} = V_{DD} = 5.5V)

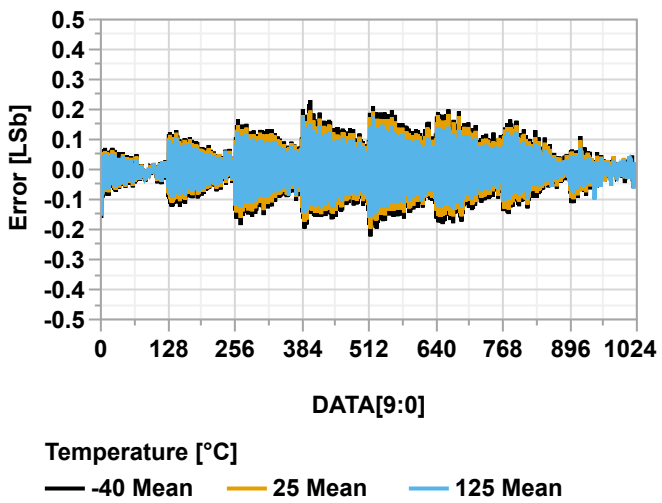

© 2021 Microchip Technology Inc.
and its subsidiaries

chanhvinh.com

Figure 38-154. INL vs. DAC Code (V_{REFA} = V_{DD} = 3.0V)

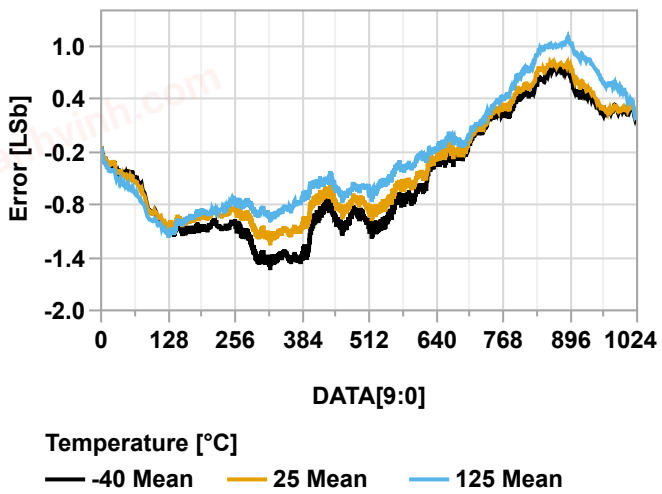

Figure 38-155. INL vs. DAC Code (V_{REFA} = V_{DD} = 5.5V)

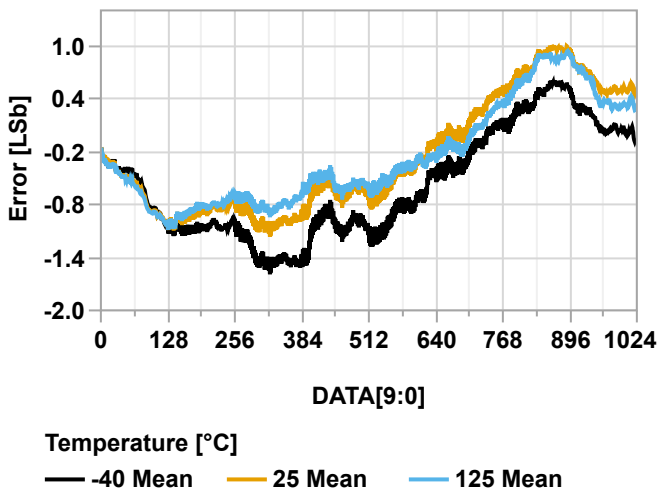

Figure 38-156. Settling Time vs. Temperature (V_{REFA} = V_{DD} = 3.0V, Output Switch from 0x000 to 0x3FF)

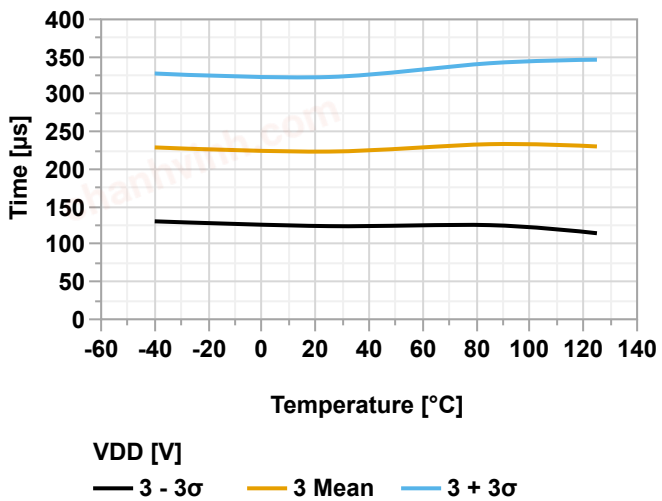

Figure 38-157. Settling Time vs. Temperature (V_{REFA} = V_{DD} = 3.0V, Output Switch from 0x3FF to 0x000)

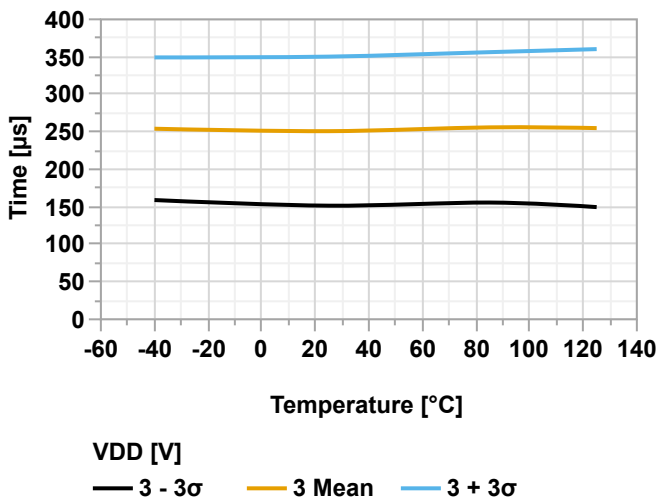

chanhvinh.com

38.10.2 DAC - 8-Bit Mode

Figure 38-158. Gain Error vs. Temperature (V_{REFA} = V_{DD} = 3.0V)

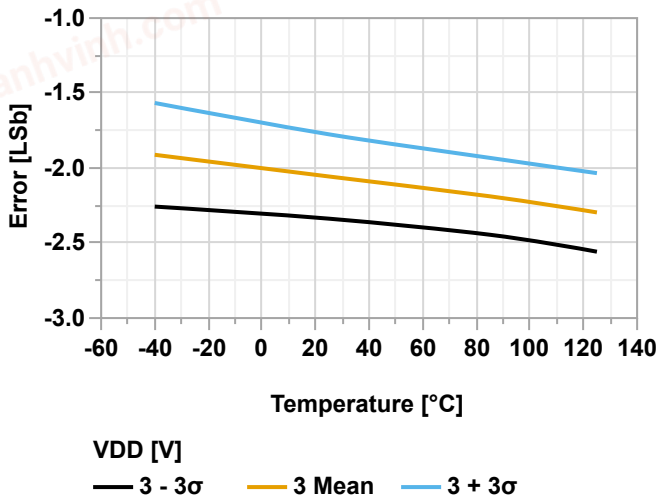

Figure 38-159. Gain Error vs. Temperature (V_{REFA} = V_{DD} = 5.5V)

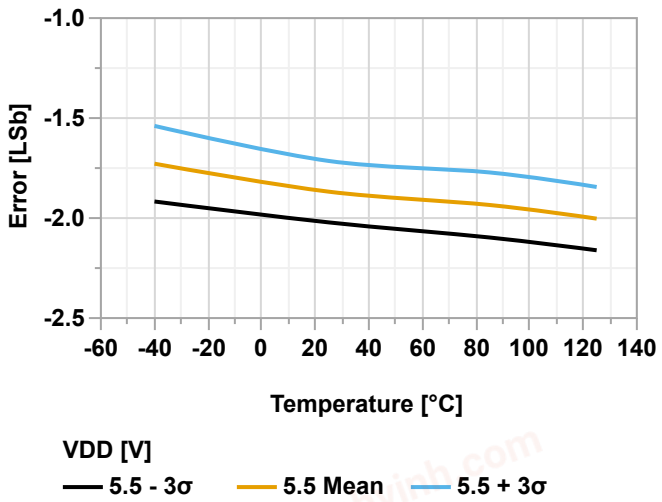

Figure 38-160. Offset Error vs. Temperature (V_{REFA} = V_{DD} = 3.0V)

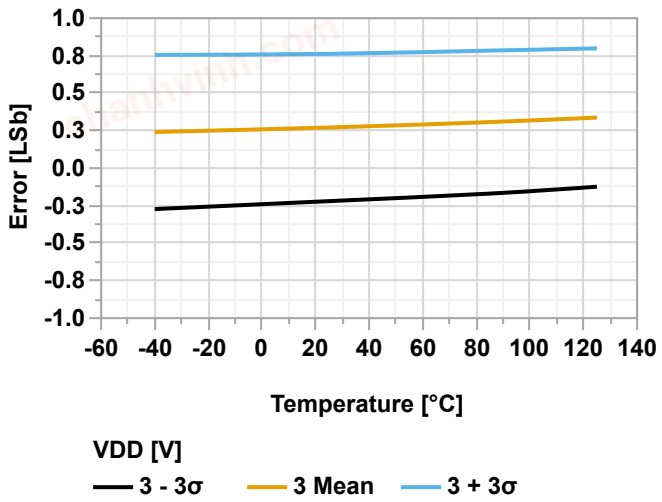

Figure 38-161. Offset Error vs. Temperature (V_{REFA} = V_{DD} = 5.5V)

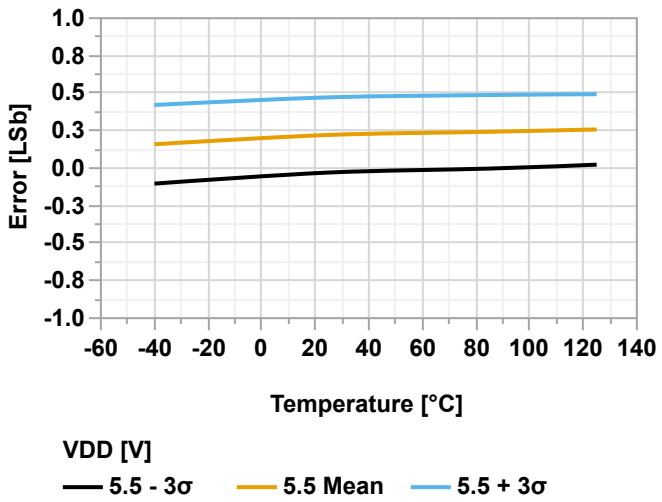

© 2021 Microchip Technology Inc.
and its subsidiaries

chanhvinh.com

Figure 38-162. DNL vs. DAC Code (V_{REFA} = V_{DD} = 3.0V)

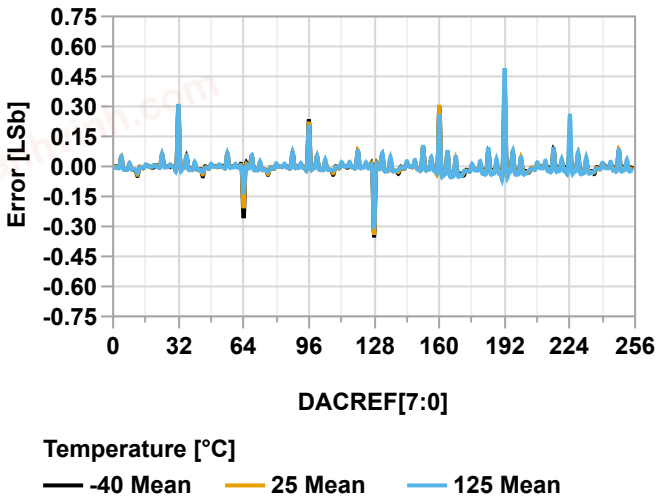

Figure 38-163. DNL vs. DAC Code (V_{REFA} = V_{DD} = 5.5V)

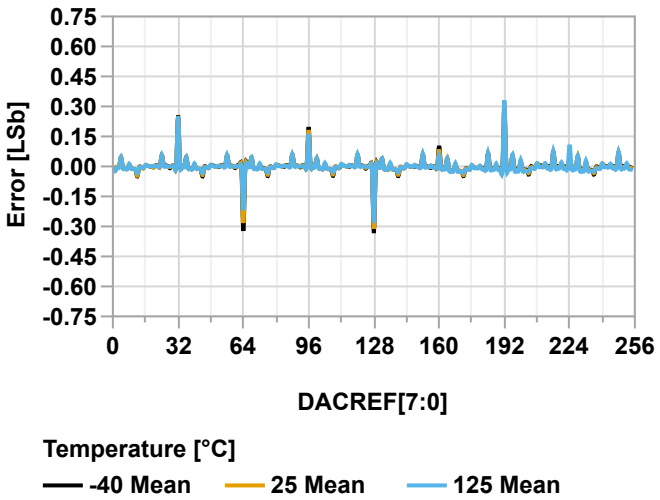

Figure 38-164. INL vs. DAC Code (V_{REFA} = V_{DD} = 3.0V)

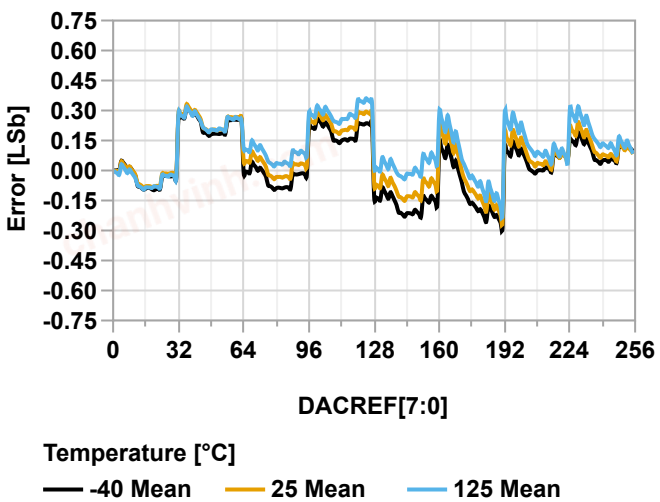

Figure 38-165. INL vs. DAC Code (V_{REFA} = V_{DD} = 5.5V)

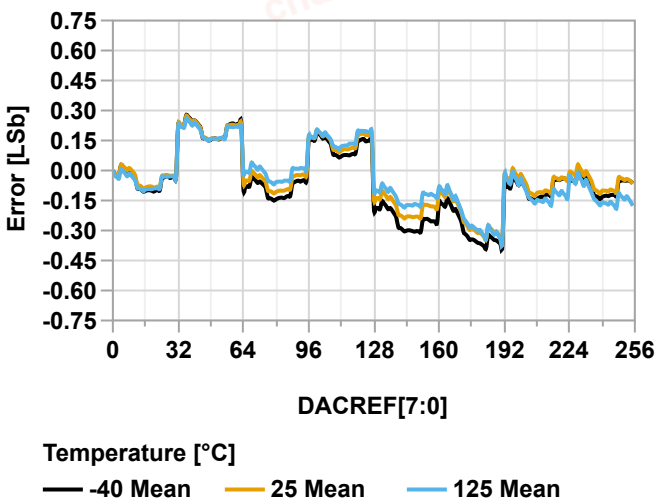

chanhvinh.com

38.11 ZCD

Figure 38-166. Falling Edge Response Time vs. V_{DD}

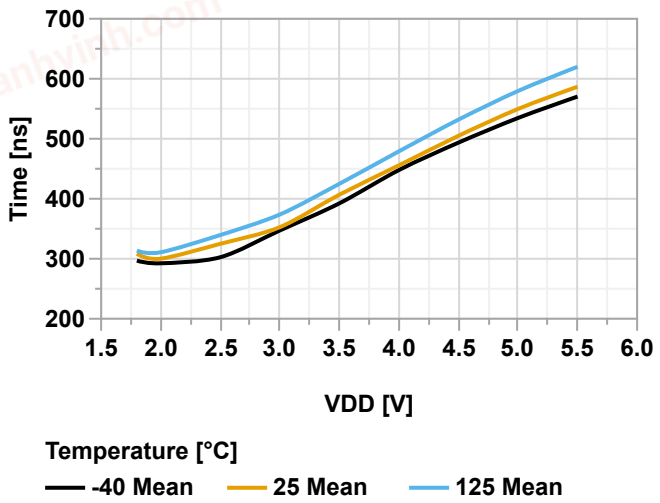

Figure 38-167. Rising Edge Response Time vs. V_{DD}

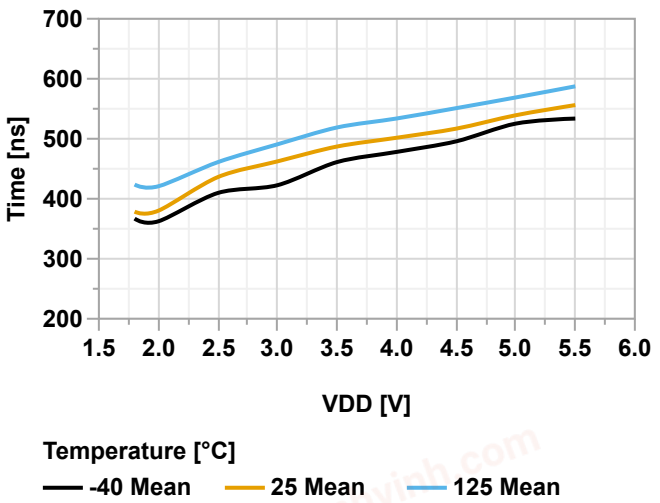

Figure 38-168. Zero-Cross Detector Pin Voltage vs. Current (V_{DD} = 5.5V)

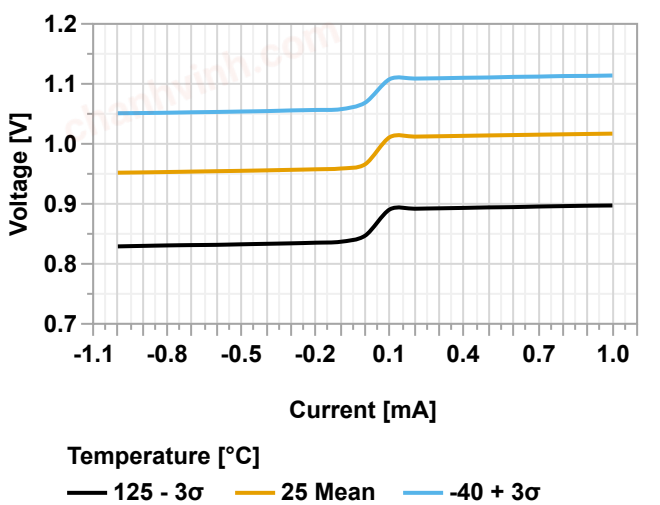

Figure 38-169. Zero-Cross Detector Pin Voltage vs. Current (V_{DD} = 3.0V)

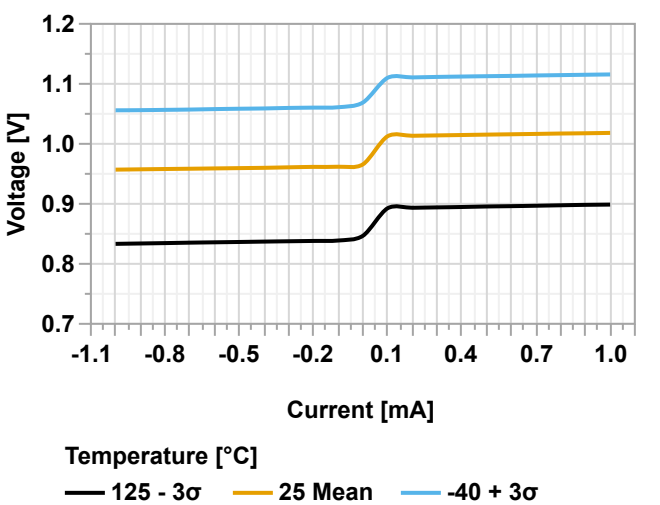

© 2021 Microchip Technology Inc.
and its subsidiaries

chanhvinh.com

Figure 38-170. Zero-Cross Detector Trip Voltage vs. V_{DD}

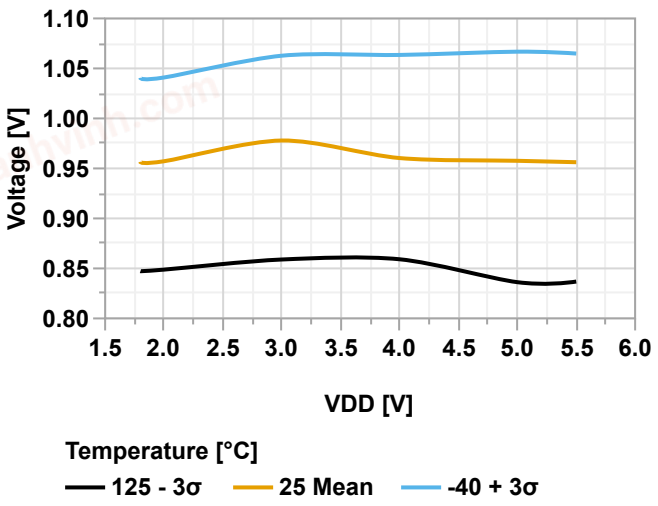

chanhvinh.com

39. Ordering Information

- Available ordering options can be found by:
  - Clicking on one of the following product page links:
    - AVR64DA64 Product Page
    - AVR64DA48 Product Page
    - AVR64DA32 Product Page
    - AVR64DA28 Product Page
  - Searching by product name at microchipdirect.com
  - Contacting your local sales representative

Note: Automotive-grade ordering codes (VAO suffix) are set up on request and not listed in Table 39-1. To request VAO ordering codes not present on the respective product page, contact your local Microchip sales representative.

Table 39-1. Available Product Numbers

Ordering Code	Flash/SRAM	Pin Count	Package Type	Supply Voltage	Temperature Range	Carrier Type
AVR64DA64T-E/MR	64 KB/8 KB	64	VQFN	1.8-5.5V	-40°C to +125°C	Tape & Reel
AVR64DA64T-E/PT	64 KB/8 KB	64	TQFP	1.8-5.5V	-40°C to +125°C	Tape & Reel
AVR64DA48T-E/6LX	64 KB/8 KB	48	VQFN	1.8-5.5V	-40°C to +125°C	Tape & Reel
AVR64DA48T-E/PT	64 KB/8 KB	48	TQFP	1.8-5.5V	-40°C to +125°C	Tape & Reel
AVR64DA32T-E/RXB	64 KB/8 KB	32	VQFN	1.8-5.5V	-40°C to +125°C	Tape & Reel
AVR64DA32T-E/PT	64 KB/8 KB	32	TQFP	1.8-5.5V	-40°C to +125°C	Tape & Reel
AVR64DA28T-E/SS	64 KB/8 KB	28	SSOP	1.8-5.5V	-40°C to +125°C	Tape & Reel
AVR64DA28T-E/SO	64 KB/8 KB	28	SOIC	1.8-5.5V	-40°C to +125°C	Tape & Reel
AVR64DA64T-I/MR	64 KB/8 KB	64	VQFN	1.8-5.5V	-40°C to +85°C	Tape & Reel
AVR64DA64T-I/PT	64 KB/8 KB	64	TQFP	1.8-5.5V	-40°C to +85°C	Tape & Reel
AVR64DA48T-I/6LX	64 KB/8 KB	48	VQFN	1.8-5.5V	-40°C to +85°C	Tape & Reel
AVR64DA48T-I/PT	64 KB/8 KB	48	TQFP	1.8-5.5V	-40°C to +85°C	Tape & Reel
AVR64DA32T-I/RXB	64 KB/8 KB	32	VQFN	1.8-5.5V	-40°C to +85°C	Tape & Reel
AVR64DA32T-I/PT	64 KB/8 KB	32	TQFP	1.8-5.5V	-40°C to +85°C	Tape & Reel
AVR64DA28T-I/SS	64 KB/8 KB	28	SSOP	1.8-5.5V	-40°C to +85°C	Tape & Reel
AVR64DA28T-I/SO	64 KB/8 KB	28	SOIC	1.8-5.5V	-40°C to +85°C	Tape & Reel
AVR64DA64-E/MR	64 KB/8 KB	64	VQFN	1.8-5.5V	-40°C to +125°C	Tray
AVR64DA64-E/PT	64 KB/8 KB	64	TQFP	1.8-5.5V	-40°C to +125°C	Tray
AVR64DA48-E/6LX	64 KB/8 KB	48	VQFN	1.8-5.5V	-40°C to +125°C	Tray
AVR64DA48-E/PT	64 KB/8 KB	48	TQFP	1.8-5.5V	-40°C to +125°C	Tray
AVR64DA32-E/RXB	64 KB/8 KB	32	VQFN	1.8-5.5V	-40°C to +125°C	Tray
AVR64DA32-E/PT	64 KB/8 KB	32	TQFP	1.8-5.5V	-40°C to +125°C	Tray
AVR64DA28-E/SS	64 KB/8 KB	28	SSOP	1.8-5.5V	-40°C to +125°C	Tube

chanhvinh.com

.....continued

Ordering Code	Flash/SRAM	Pin Count	Package Type	Supply Voltage	Temperature Range	Carrier Type
AVR64DA28-E/SO	64 KB/8 KB	28	SOIC	1.8-5.5V	-40°C to +125°C	Tube
AVR64DA28-E/SP	64 KB/8 KB	28	SPDIP	1.8-5.5V	-40°C to +125°C	Tube
AVR64DA64-I/MR	64 KB/8 KB	64	VQFN	1.8-5.5V	-40°C to +85°C	Tray
AVR64DA64-I/PT	64 KB/8 KB	64	TQFP	1.8-5.5V	-40°C to +85°C	Tray
AVR64DA48-I/6LX	64 KB/8 KB	48	VQFN	1.8-5.5V	-40°C to +85°C	Tray
AVR64DA48-I/PT	64 KB/8 KB	48	TQFP	1.8-5.5V	-40°C to +85°C	Tray
AVR64DA32-I/RXB	64 KB/8 KB	32	VQFN	1.8-5.5V	-40°C to +85°C	Tray
AVR64DA32-I/PT	64 KB/8 KB	32	TQFP	1.8-5.5V	-40°C to +85°C	Tray
AVR64DA28-I/SS	64 KB/8 KB	28	SSOP	1.8-5.5V	-40°C to +85°C	Tube
AVR64DA28-I/SO	64 KB/8 KB	28	SOIC	1.8-5.5V	-40°C to +85°C	Tube
AVR64DA28-I/SP	64 KB/8 KB	28	SPDIP	1.8-5.5V	-40°C to +85°C	Tube

Figure 39-1. Product Identification System

To order or obtain information, for example on pricing or delivery, refer to the factory, or the listed sales office.

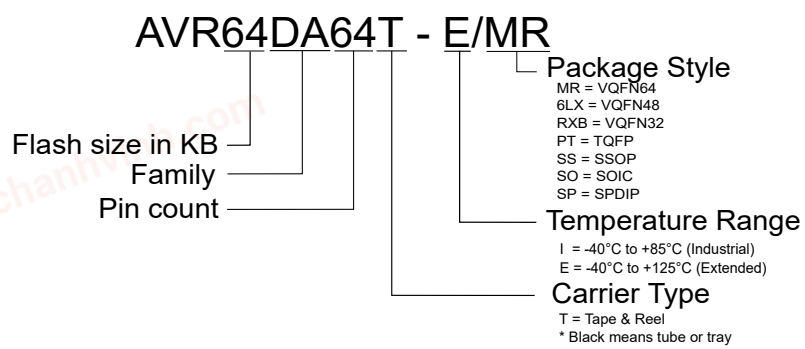

Note: The Tape and Reel identifier only appears in the catalog part number description. This identifier is used for ordering purposes and is not printed on the device package. Check with your Microchip Sales Office for package availability with the Tape and Reel option.

chanhvinh.com

40. Package Drawings

40.1 Online Package Drawings

For the most recent package drawings:

1. Go to www.microchip.com/packaging.
2. Go to the package type-specific page, for example, VQFN.
3. Search for either Drawing Number or Style to find the most recent package drawings.

Table 40-1. Drawing Numbers

Pin Count	Package Type	Drawing Number	Style
28	SPDIP	C04-00070	SP
28	SOIC	C04-00052	SO
28	SSOP	C04-00073	SS
32	VQFN	C04-21395	RXB
32	VQFN(1)	C04-21511	QZB
32	TQFP	C04-00074	PT
48	VQFN	C04-00494	6LX
48	VQFN(1)	C04-00504	6MX
48	TQFP	C04-00300	PT
64	VQFN	C04-00149	MR
64	VQFN(1)	C04-00483	5LX
64	TQFP	C04-00085	PT

Note:

1. This package type has wettable flanks and will only be available for automotive (VAO) ordering codes.

40.2 Package Marking Information

Legend:	XX...X	Customer-specific information or Microchip part number
	Y	Year code (last digit of calendar year)
	YY	Year code (last 2 digits of calendar year)
	WW	Week code (week of January 1 is week ‘01’)
	NNN	Alphanumeric traceability code
	(e3)	Pb-free JEDEC® designator for Matte Tin (Sn)
Note:	In the event the full Microchip part number cannot be marked on one line, it will be carried over to the next line, thus limiting the number of available characters for customer-specific information.	

chanhvinh.com

40.2.1 28-Pin SPDIP

Figure 40-1. General

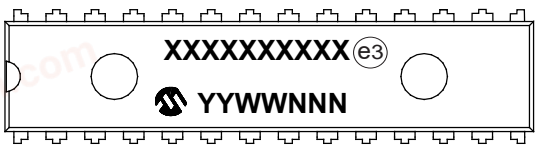

Figure 40-2. Example

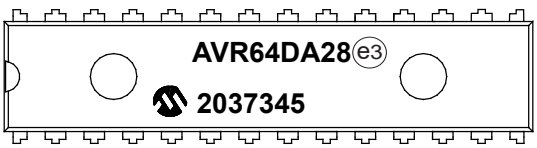

40.2.2 28-Pin SOIC

Figure 40-3. General

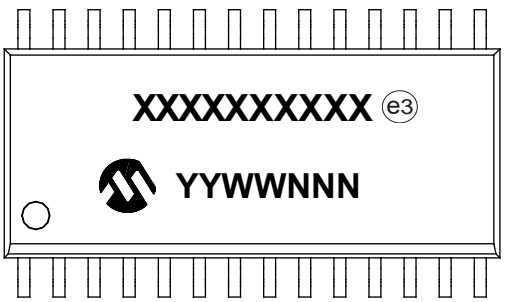

Figure 40-4. Example

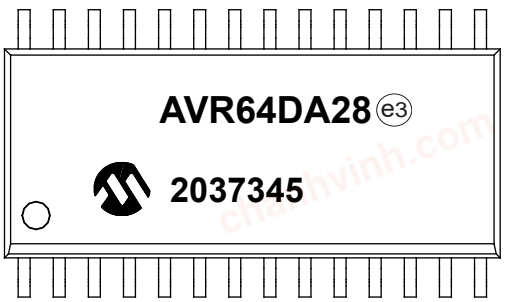

40.2.3 28-Pin SSOP

Figure 40-5. General

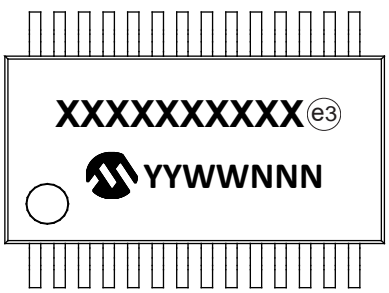

Figure 40-6. Example

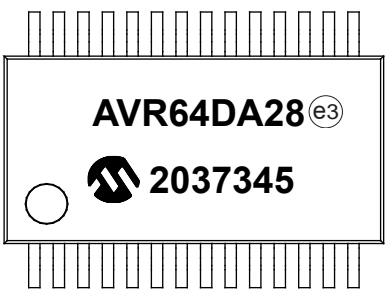

chanhvinh.com

40.2.4 32-Pin VQFN

Figure 40-7. General

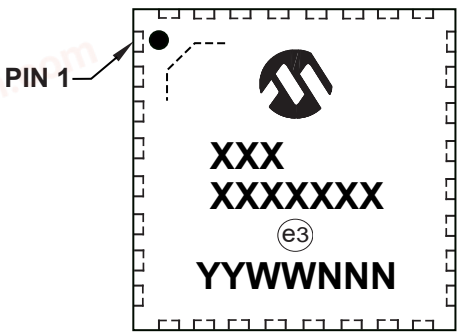

Figure 40-8. Example

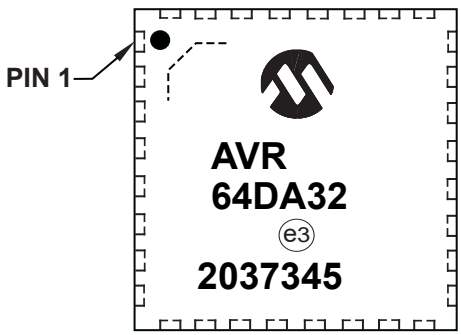

40.2.5 32-Pin TQFP

Figure 40-9. General

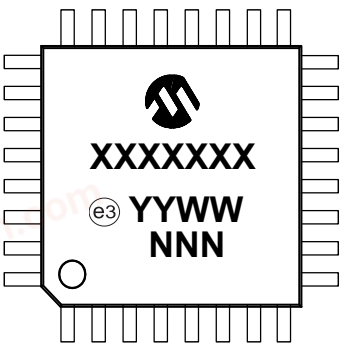

Figure 40-10. Example

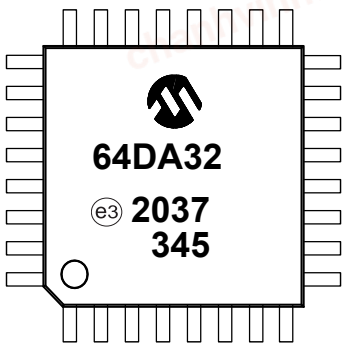

40.2.6 48-Pin VQFN

Figure 40-11. General

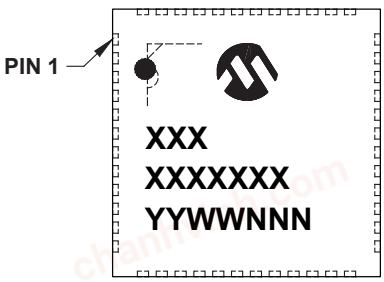

Figure 40-12. Example

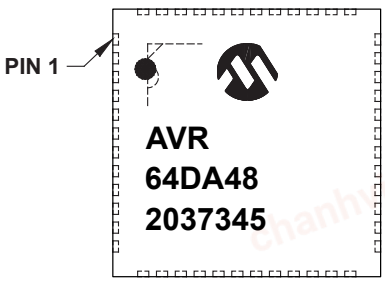

chanhvinh.com

40.2.7 48-Pin TQFP

Figure 40-13. General

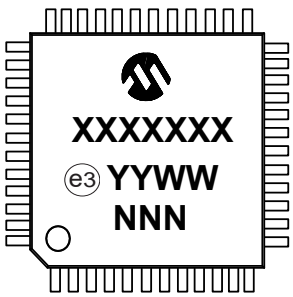

Figure 40-14. Example

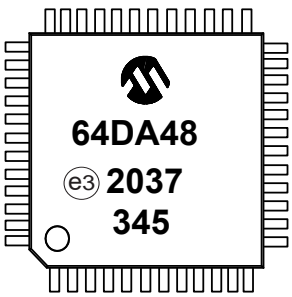

40.2.8 64-Pin VQFN

Figure 40-15. General

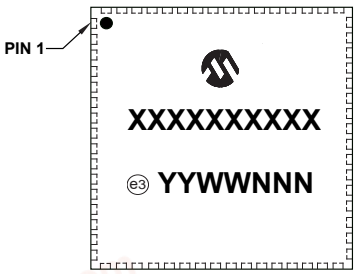

Figure 40-16. Example

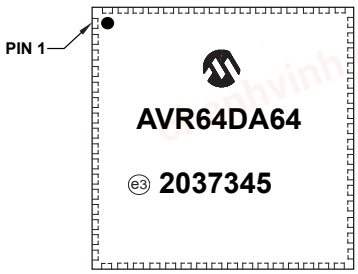

40.2.9 64-Pin TQFP

Figure 40-17. General

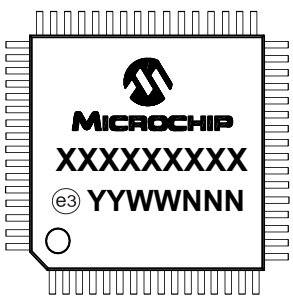

Figure 40-18. Example

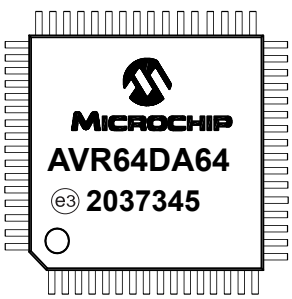

© 2021 Microchip Technology Inc.
and its subsidiaries

chanhvinh.com

40.3 28-Pin SPDIP

28-Lead Skinny Plastic Dual In-Line (SP) – 300 mil Body [SPDIP]

Note: For the most current package drawings, please see the Microchip Packaging Specification located at http://www.microchip.com/packaging

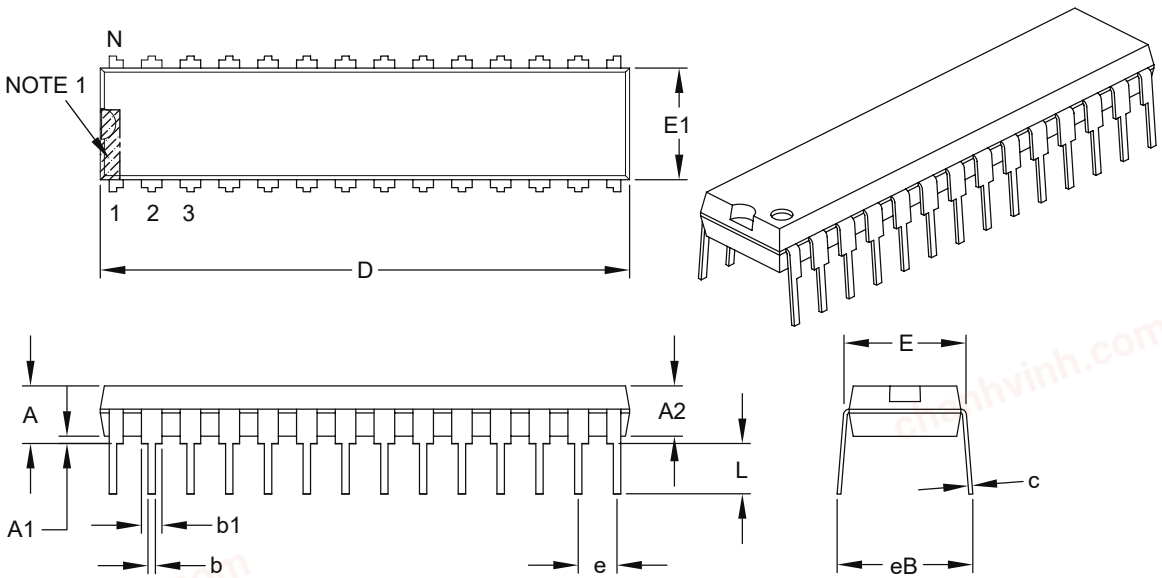

Units		INCHES		
Dimension Limits		MIN	NOM	MAX
Number of Pins	N		28	
Pitch	e		.100 BSC	
Top to Seating Plane	A	–	–	.200
Molded Package Thickness	A2	.120	.135	.150
Base to Seating Plane	A1	.015	–	–
Shoulder to Shoulder Width	E	.290	.310	.335
Molded Package Width	E1	.240	.285	.295
Overall Length	D	1.345	1.365	1.400
Tip to Seating Plane	L	.110	.130	.150
Lead Thickness	c	.008	.010	.015
Upper Lead Width	b1	.040	.050	.070
Lower Lead Width	b	.014	.018	.022
Overall Row Spacing §	eB	–	–	.430

Notes:

1. Pin 1 visual index feature may vary, but must be located within the hatched area.
2. § Significant Characteristic.
3. Dimensions D and E1 do not include mold flash or protrusions. Mold flash or protrusions shall not exceed .010" per side.
4. Dimensioning and tolerancing per ASME Y14.5M.

BSC: Basic Dimension. Theoretically exact value shown without tolerances.

Microchip Technology Drawing C04-070B

chanhvinh.com

40.4 28-Pin SOIC

28-Lead Plastic Small Outline (SO) - Wide, 7.50 mm Body [SOIC]

Note: For the most current package drawings, please see the Microchip Packaging Specification located at http://www.microchip.com/packaging

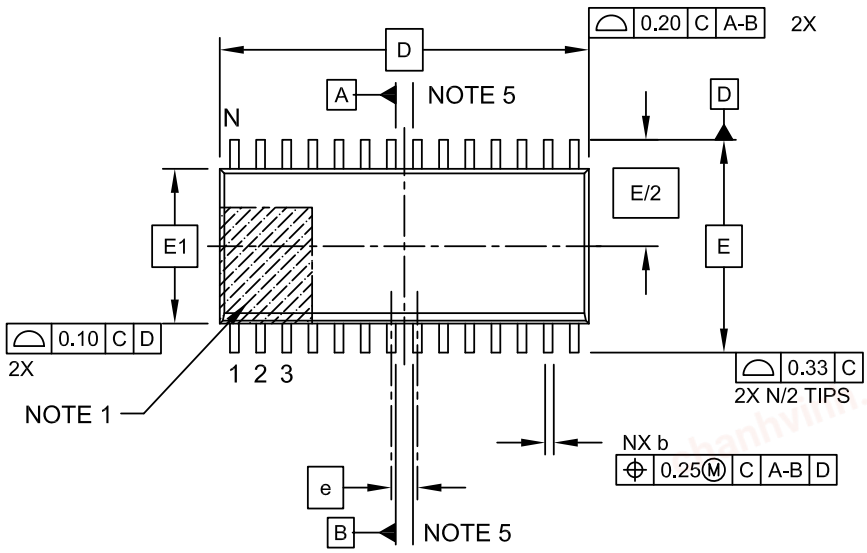

TOP VIEW

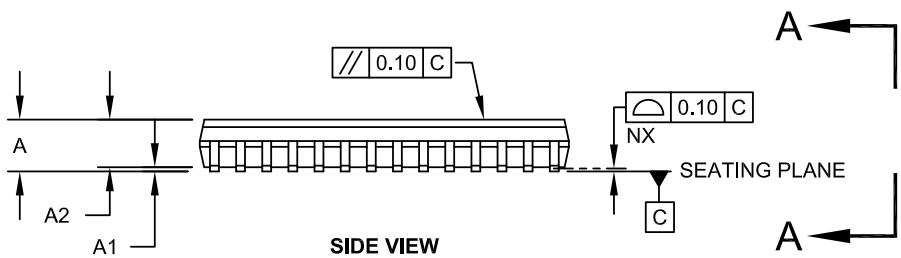

SIDE VIEW

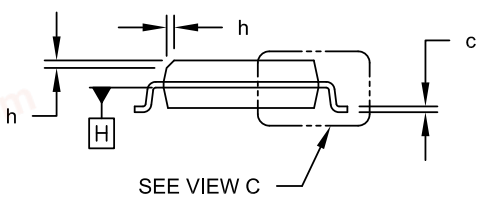

VIEW A-A

Microchip Technology Drawing C04-052C Sheet 1 of 2

chanhvinh.com

28-Lead Plastic Small Outline (SO) - Wide, 7.50 mm Body [SOIC]

Note: For the most current package drawings, please see the Microchip Packaging Specification located at http://www.microchip.com/packaging

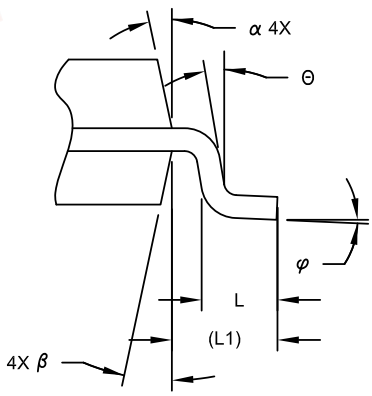

VIEW C

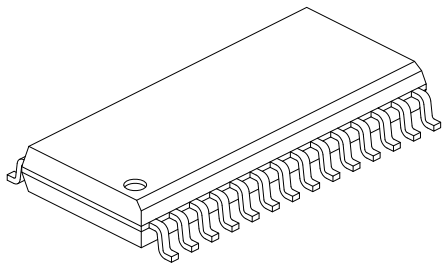

Units		MILLIMETERS		
Dimension Limits		MIN	NOM	MAX
Number of Pins	N		28	
Pitch	e		1.27 BSC	
Overall Height	A	-	-	2.65
Molded Package Thickness	A2	2.05	-	-
Standoff §	A1	0.10	-	0.30
Overall Width	E		10.30 BSC	
Molded Package Width	E1		7.50 BSC	
Overall Length	D		17.90 BSC	
Chamfer (Optional)	h	0.25	-	0.75
Foot Length	L	0.40	-	1.27
Footprint	L1		1.40 REF	
Lead Angle	Θ	0°	-	-
Foot Angle	φ	0°	-	8°
Lead Thickness	c	0.18	-	0.33
Lead Width	b	0.31	-	0.51
Mold Draft Angle Top	α	5°	-	15°
Mold Draft Angle Bottom	β	5°	-	15°

Notes:

1. Pin 1 visual index feature may vary, but must be located within the hatched area.
2. § Significant Characteristic
3. Dimension D does not include mold flash, protrusions or gate burrs, which shall not exceed 0.15 mm per end. Dimension E1 does not include interlead flash or protrusion, which shall not exceed 0.25 mm per side.
4. Dimensioning and tolerancing per ASME Y14.5M

   BSC: Basic Dimension. Theoretically exact value shown without tolerances.

   REF: Reference Dimension, usually without tolerance, for information purposes only.
5. Datums A & B to be determined at Datum H.

Microchip Technology Drawing C04-052C Sheet 2 of 2

chanhvinh.com

28-Lead Plastic Small Outline (SO) - Wide, 7.50 mm Body [SOIC]

Note: For the most current package drawings, please see the Microchip Packaging Specification located at http://www.microchip.com/packaging

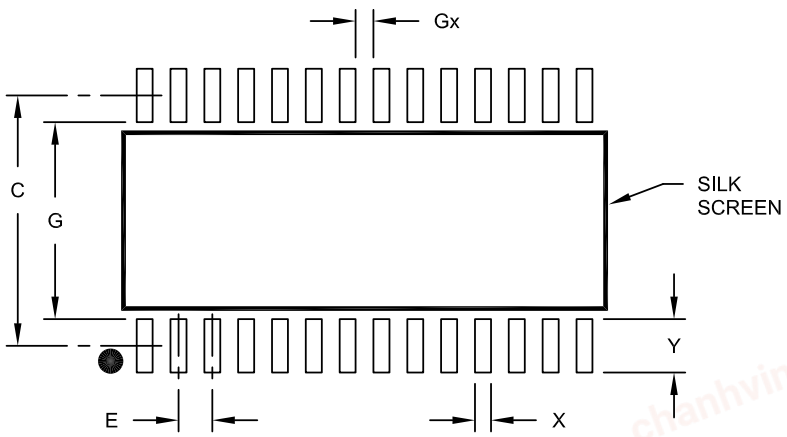

RECOMMENDED LAND PATTERN

Units		MILLIMETERS		
Dimension Limits		MIN	NOM	MAX
Contact Pitch	E	1.27 BSC		
Contact Pad Spacing	C		9.40	
Contact Pad Width (X28)	X			0.60
Contact Pad Length (X28)	Y			2.00
Distance Between Pads	Gx	0.67		
Distance Between Pads	G	7.40		

Notes:

1. Dimensioning and tolerancing per ASME Y14.5M

BSC: Basic Dimension. Theoretically exact value shown without tolerances.

Microchip Technology Drawing No. C04-2052A

chanhvinh.com

40.5 28-Pin SSOP

28-Lead Plastic Shrink Small Outline (SS) - 5.30 mm Body [SSOP]

Note: For the most current package drawings, please see the Microchip Packaging Specification located at http://www.microchip.com/packaging

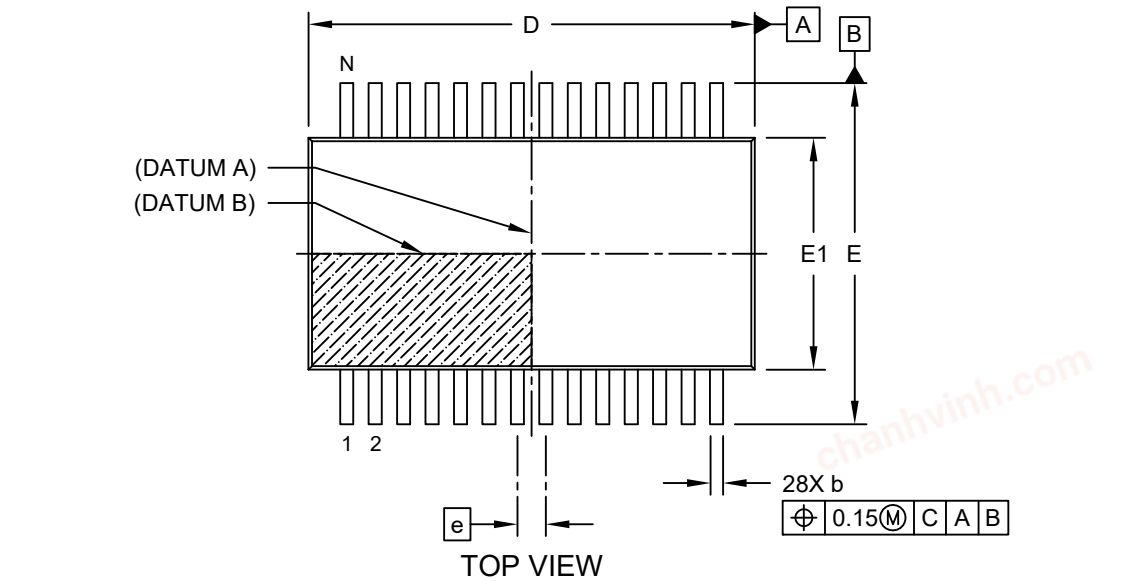

TOP VIEW

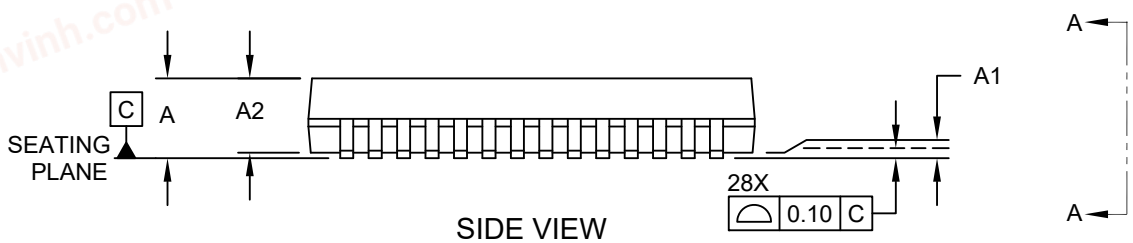

SIDE VIEW

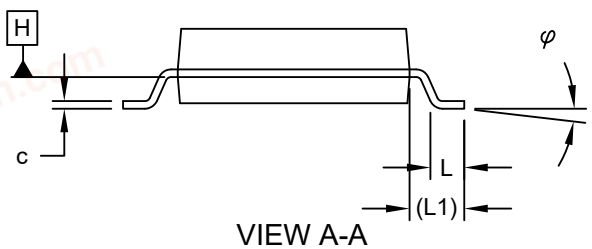

VIEW A-A

Microchip Technology Drawing C04-073 Rev C Sheet 1 of 2

chanhvinh.com

28-Lead Plastic Shrink Small Outline (SS) - 5.30 mm Body [SSOP]

Note: For the most current package drawings, please see the Microchip Packaging Specification located at http://www.microchip.com/packaging

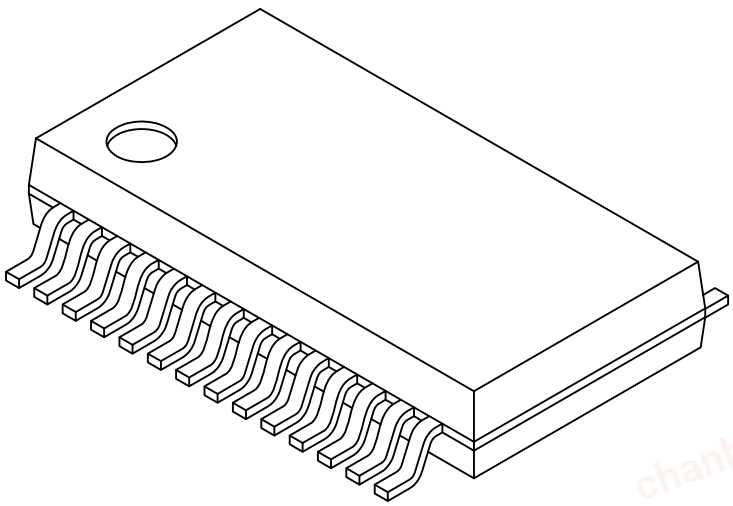

Units		MILLIMETERS		
Dimension Limits		MIN	NOM	MAX
Number of Pins	N		28	
Pitch	e		0.65 BSC	
Overall Height	A	-	-	2.00
Molded Package Thickness	A2	1.65	1.75	1.85
Standoff	A1	0.05	-	-
Overall Width	E	7.40	7.80	8.20
Molded Package Width	E1	5.00	5.30	5.60
Overall Length	D	9.90	10.20	10.50
Foot Length	L	0.55	0.75	0.95
Footprint	L1		1.25 REF	
Lead Thickness	c	0.09	-	0.25
Foot Angle	φ	0°	4°	8°
Lead Width	b	0.22	-	0.38

Notes:

1. Pin 1 visual index feature may vary, but must be located within the hatched area.
2. Dimensions D and E1 do not include mold flash or protrusions. Mold flash or protrusions shall not exceed 0.20mm per side.
3. Dimensioning and tolerancing per ASME Y14.5M

   BSC: Basic Dimension. Theoretically exact value shown without tolerances.

   REF: Reference Dimension, usually without tolerance, for information purposes only.

Microchip Technology Drawing C04-073 Rev C Sheet 2 of 2

chanhvinh.com

28-Lead Plastic Shrink Small Outline (SS) - 5.30 mm Body [SSOP]

Note: For the most current package drawings, please see the Microchip Packaging Specification located at http://www.microchip.com/packaging

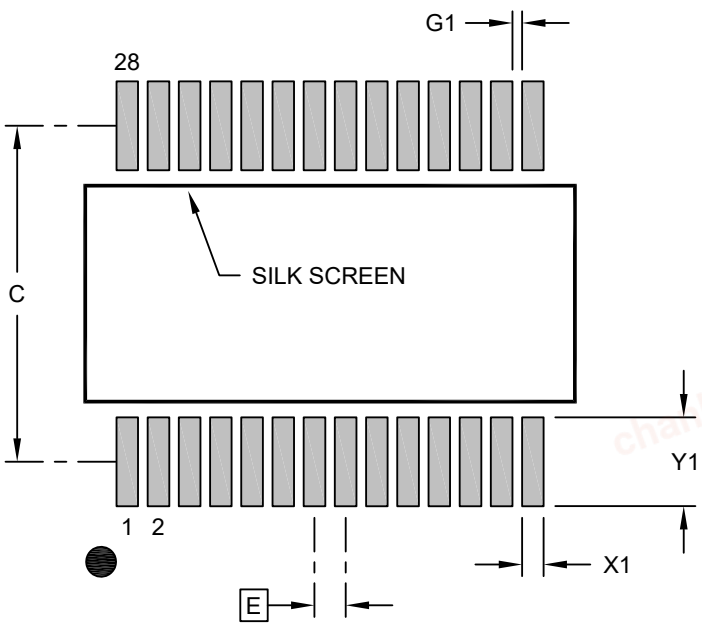

RECOMMENDED LAND PATTERN

Units		MILLIMETERS		
Dimension Limits		MIN	NOM	MAX
Contact Pitch	E	0.65 BSC		
Contact Pad Spacing	C		7.00	
Contact Pad Width (X28)	X1			0.45
Contact Pad Length (X28)	Y1			1.85
Contact Pad to Center Pad (X26)	G1	0.20		

Notes:

1. Dimensioning and tolerancing per ASME Y14.5M
   BSC: Basic Dimension. Theoretically exact value shown without tolerances.
2. For best soldering results, thermal vias, if used, should be filled or tented to avoid solder loss during reflow process

Microchip Technology Drawing C04-2073 Rev B

© 2021 Microchip Technology Inc. and its subsidiaries

chanhvinh.com

40.6 32-Pin VQFN

32-Lead Very Thin Plastic Quad Flat, No Lead Package (RXB) - 5x5x0.9 mm Body [VQFN] With 3.1x3.1 mm Exposed Pad; Atmel Legacy Global Package Code ZMF

Note: For the most current package drawings, please see the Microchip Packaging Specification located at http://www.microchip.com/packaging

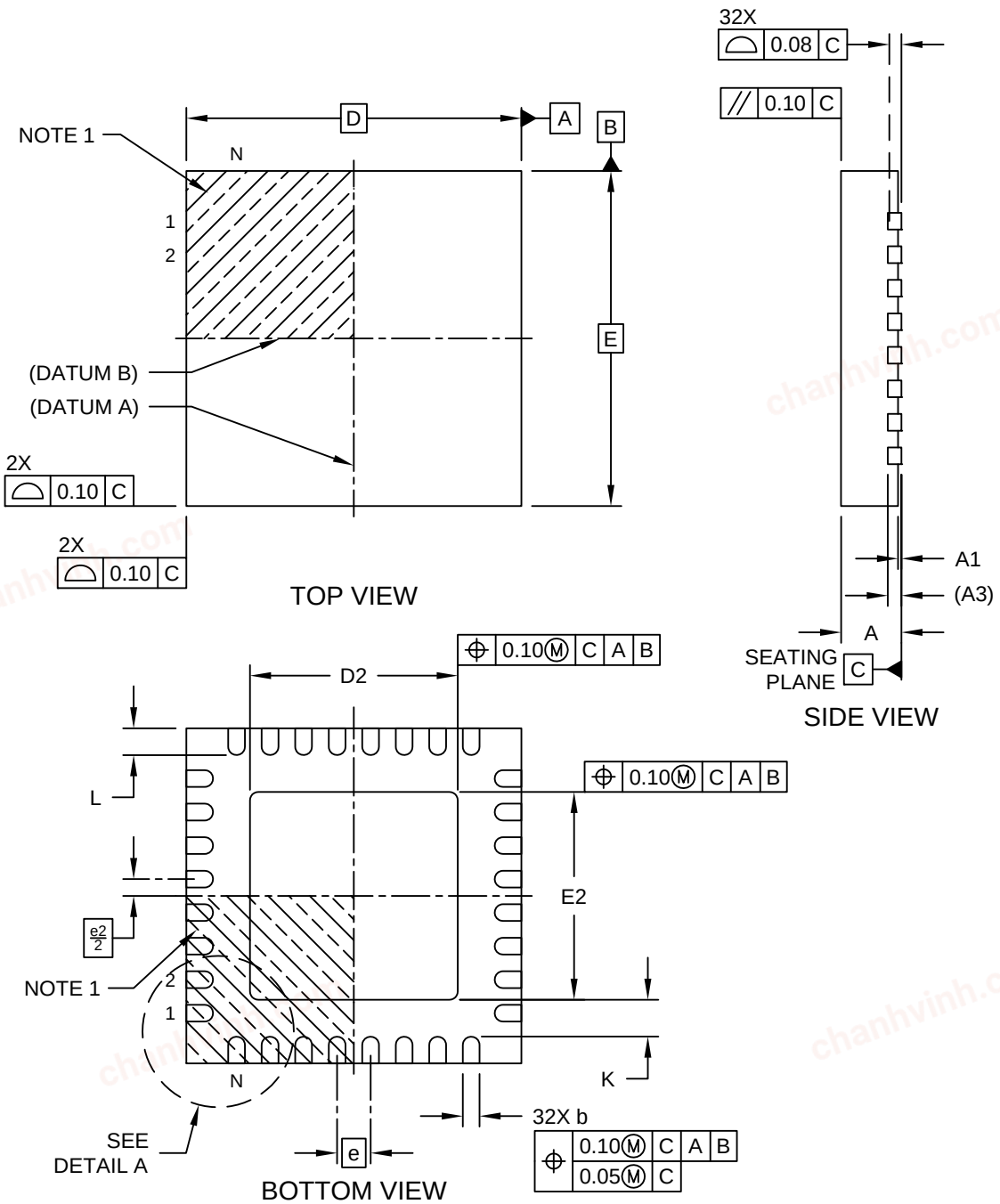

Microchip Technology Drawing C04-21395-RXB Rev B Sheet 1 of 2

chanhvinh.com

32-Lead Very Thin Plastic Quad Flat, No Lead Package (RXB) - 5x5x0.9 mm Body [VQFN] With 3.1x3.1 mm Exposed Pad; Atmel Legacy Global Package Code ZMF

Note: For the most current package drawings, please see the Microchip Packaging Specification located at http://www.microchip.com/packaging

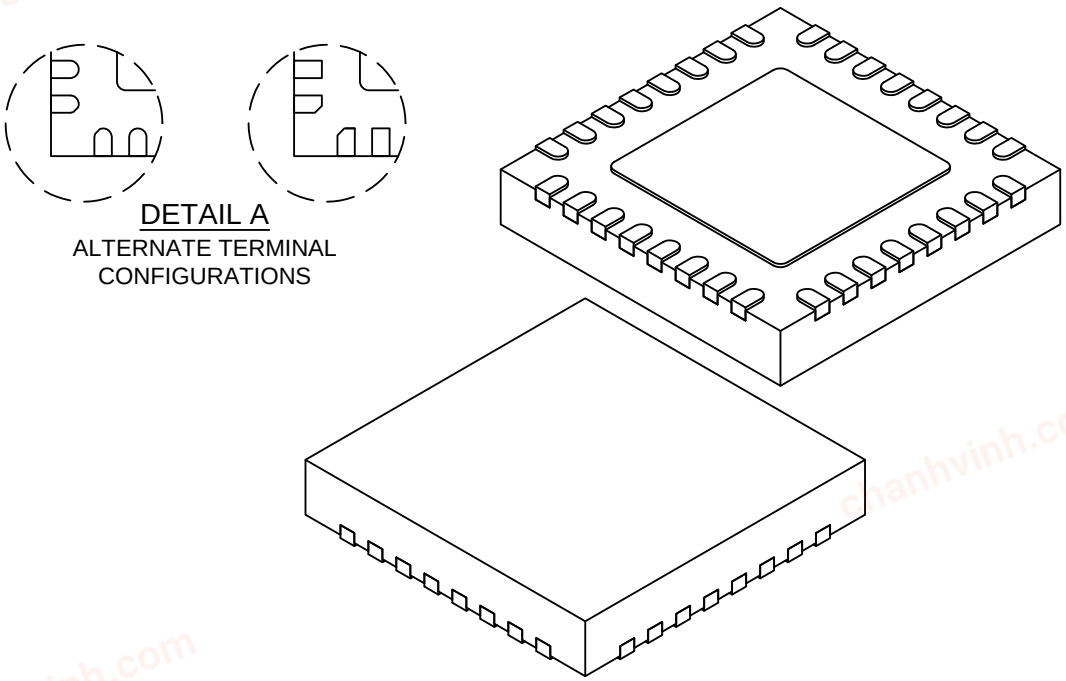

DETAIL A
ALTERNATE TERMINAL CONFIGURATIONS

Units		MILLIMETERS		
Dimension Limits		MIN	NOM	MAX
Number of Terminals	N		32	
Pitch	e		0.50 BSC	
Overall Height	A	0.80	0.85	0.90
Standoff	A1	0.00	0.02	0.05
Terminal Thickness	A3		0.203 REF	
Overall Length	D		5.00 BSC	
Exposed Pad Length	D2	3.00	3.10	3.20
Overall Width	E		5.00 BSC	
Exposed Pad Width	E2	3.00	3.10	3.20
Terminal Width	b	0.18	0.25	0.30
Terminal Length	L	0.30	0.40	0.50
Terminal-to-Exposed-Pad	K	0.20	-	-

Notes:

1. Pin 1 visual index feature may vary, but must be located within the hatched area.
2. Package is saw singulated
3. Dimensioning and tolerancing per ASME Y14.5M
   BSC: Basic Dimension. Theoretically exact value shown without tolerances.
   REF: Reference Dimension, usually without tolerance, for information purposes only.

Microchip Technology Drawing C04-21395-RXB Rev B Sheet 2 of 2

chanhvinh.com

32-Lead Very Thin Plastic Quad Flat, No Lead Package (RXB) - 5x5x0.9 mm Body [VQFN] With 3.1x3.1 mm Exposed Pad; Atmel Legacy Global Package Code ZMF

Note: For the most current package drawings, please see the Microchip Packaging Specification located at http://www.microchip.com/packaging

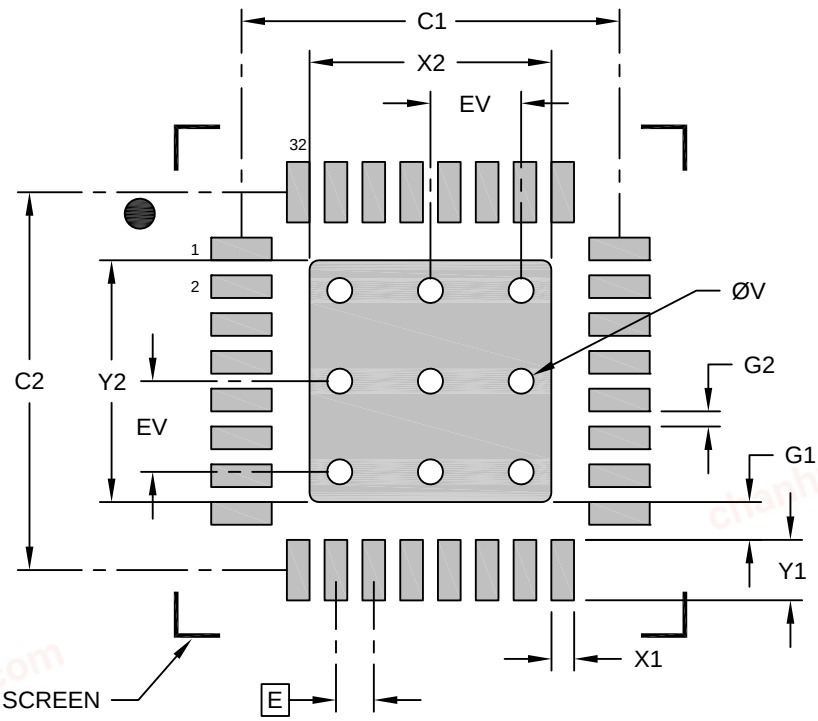

RECOMMENDED LAND PATTERN

Units		MILLIMETERS		
Dimension Limits		MIN	NOM	MAX
Contact Pitch	E		0.50 BSC	
Center Pad Width	X2			3.20
Center Pad Length	Y2			3.20
Contact Pad Spacing	C1		5.00	
Contact Pad Spacing	C2		5.00	
Contact Pad Width (X32)	X1			0.30
Contact Pad Length (X32)	Y1			0.80
Contact Pad to Center Pad (X32)	G1	0.20		
Contact Pad to Contactr Pad (X28)	G2	0.20		
Thermal Via Diameter	V		0.33	
Thermal Via Pitch	EV		1.20	

Notes:

1. Dimensioning and tolerancing per ASME Y14.5M
   BSC: Basic Dimension. Theoretically exact value shown without tolerances.
2. For best soldering results, thermal vias, if used, should be filled or tented to avoid solder loss during reflow process

Microchip Technology Drawing C04-23395-RXB Rev B

chanhvinh.com

40.7 32-Pin VQFN Wettable Flanks

32-Lead Ultra Thin Plastic Quad Flat, No Lead Package (QZB) - 5x5x0.9 mm Body [VQFN] With 3.1 mm Exposed Pad and Stepped Wettable Flanks

Note: For the most current package drawings, please see the Microchip Packaging Specification located at http://www.microchip.com/packaging

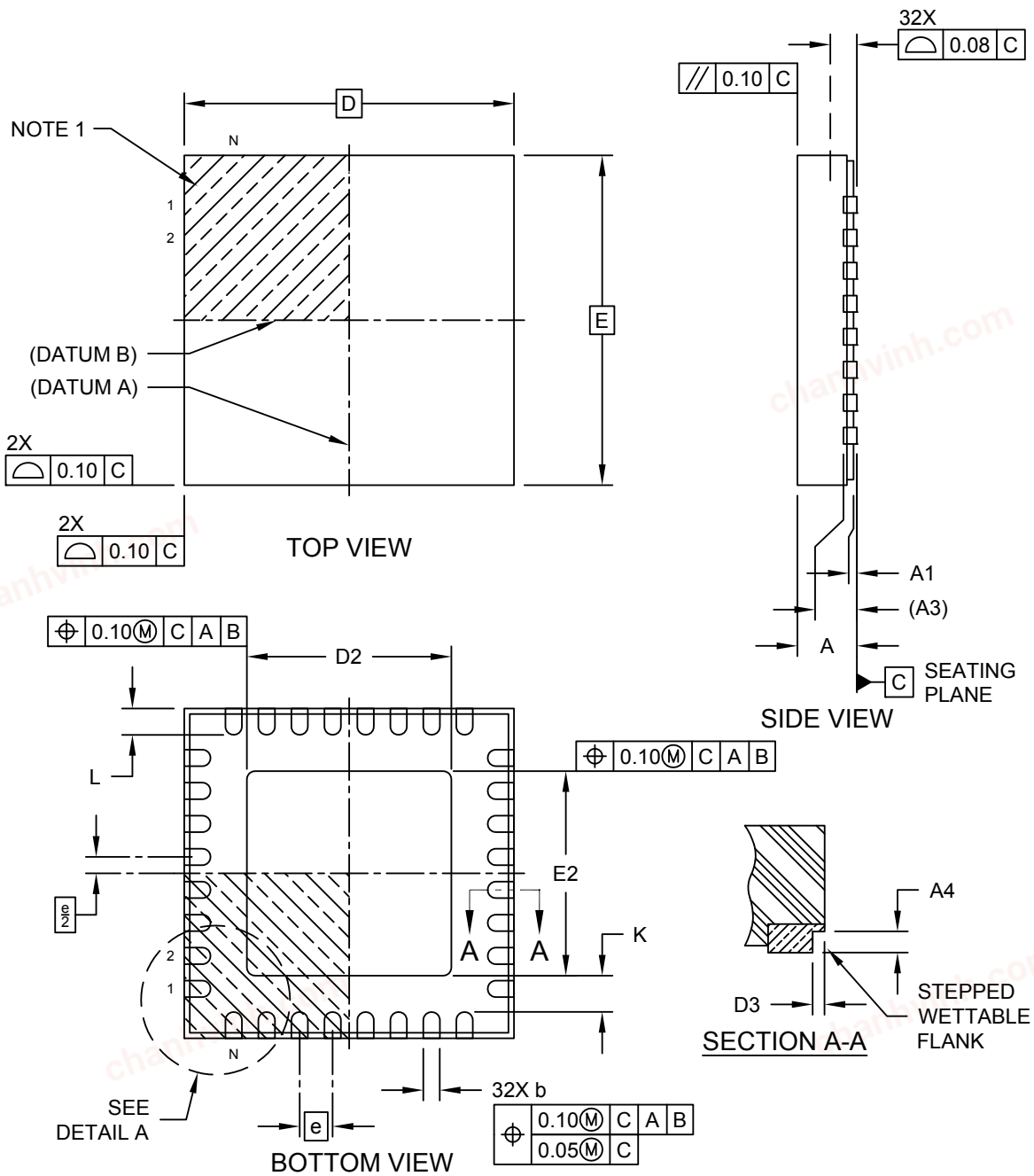

Microchip Technology Drawing C04-21511 Rev A Sheet 1 of 2

chanhvinh.com

32-Lead Ultra Thin Plastic Quad Flat, No Lead Package (QZB) - 5x5x0.9 mm Body [VQFN] With 3.1 mm Exposed Pad and Stepped Wettable Flanks

Note: For the most current package drawings, please see the Microchip Packaging Specification located at http://www.microchip.com/packaging

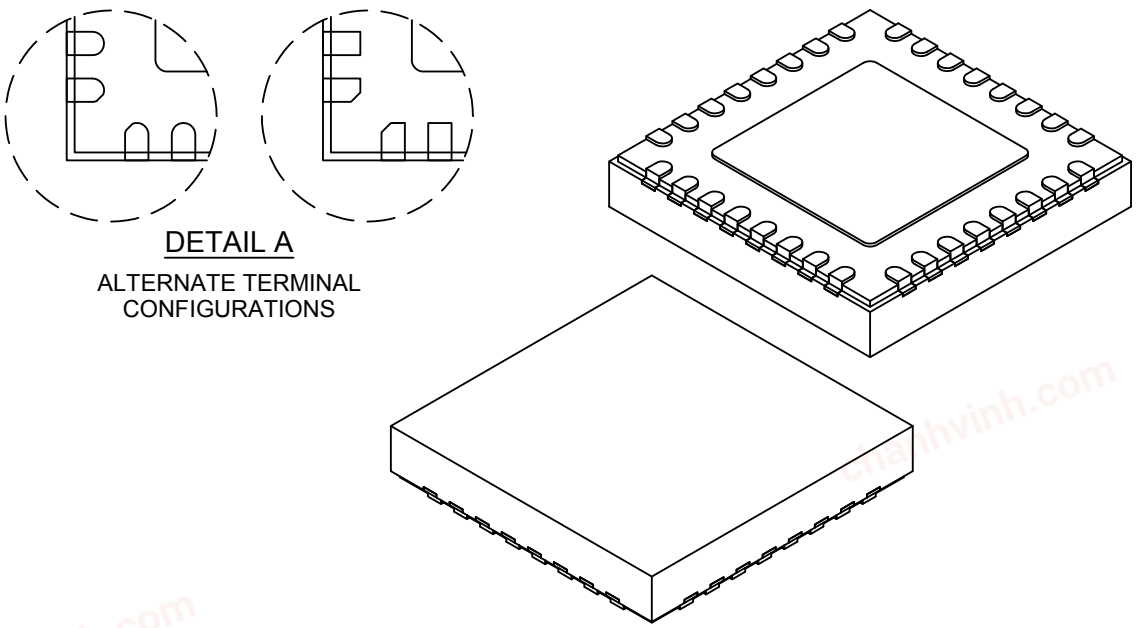

DETAIL A

ALTERNATE TERMINAL CONFIGURATIONS

Units		MILLIMETERS		
Dimension Limits		MIN	NOM	MAX
Number of Terminals	N		32	
Pitch	e		0.50 BSC	
Overall Height	A	0.80	0.85	0.90
Standoff	A1	0.00	0.02	0.05
Terminal Thickness	A3		0.203 REF	
Overall Length	D		5.00 BSC	
Exposed Pad Length	D2	3.00	3.10	3.20
Overall Width	E		5.00 BSC	
Exposed Pad Width	E2	3.00	3.10	3.20
Terminal Width	b	0.18	0.25	0.30
Terminal Length	L	0.30	0.40	0.50
Terminal-to-Exposed-Pad	K	0.20	-	-
Wettable Flank Step Length	D3	-	-	0.085
Wettable Flank Step Height	A4	0.10	-	0.19

Notes:

1. Pin 1 visual index feature may vary, but must be located within the hatched area.
2. Package is saw singulated
3. Dimensioning and tolerancing per ASME Y14.5M
   BSC: Basic Dimension. Theoretically exact value shown without tolerances.
   REF: Reference Dimension, usually without tolerance, for information purposes only.

Microchip Technology Drawing C04-21511 Rev A Sheet 1 of 2

chanhvinh.com

32-Lead Ultra Thin Plastic Quad Flat, No Lead Package (QZB) - 5x5x0.9 mm Body [VQFN] With 3.1 mm Exposed Pad and Stepped Wettable Flanks

Note: For the most current package drawings, please see the Microchip Packaging Specification located at http://www.microchip.com/packaging

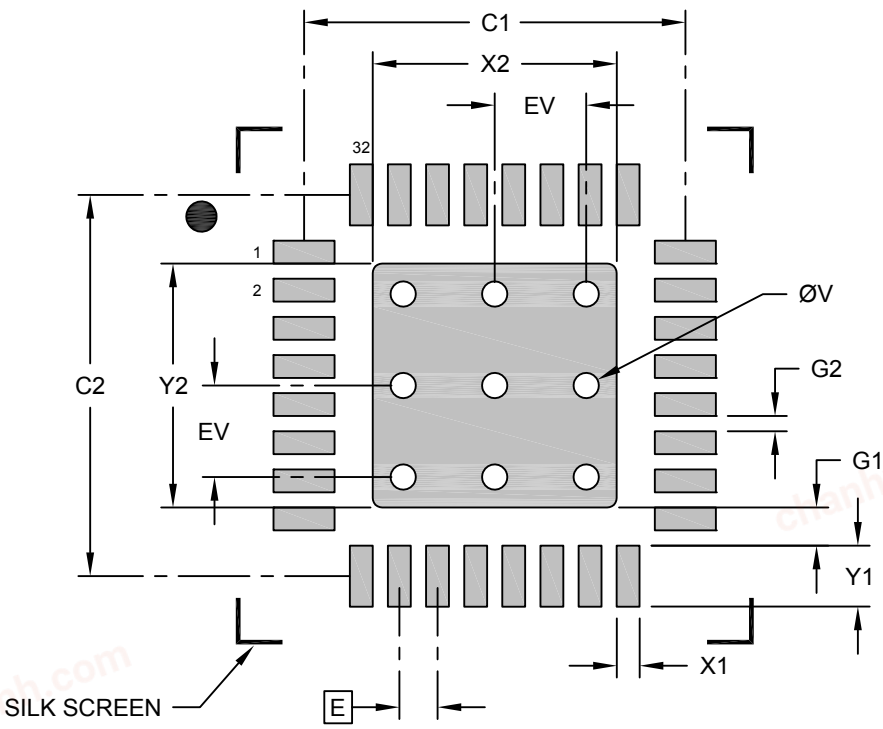

RECOMMENDED LAND PATTERN

Units		MILLIMETERS		
Dimension Limits		MIN	NOM	MAX
Contact Pitch	E		0.50 BSC	
Center Pad Width	X2			3.20
Center Pad Length	Y2			3.20
Contact Pad Spacing	C1		5.00	
Contact Pad Spacing	C2		5.00	
Contact Pad Width (X32)	X1			0.30
Contact Pad Length (X32)	Y1			0.80
Contact Pad to Center Pad (X32)	G1	0.20		
Contact Pad to Contactr Pad (X28)	G2	0.20		
Thermal Via Diameter	V		0.33	
Thermal Via Pitch	EV		1.20	

Notes:

1. Dimensioning and tolerancing per ASME Y14.5M
   BSC: Basic Dimension. Theoretically exact value shown without tolerances.
2. For best soldering results, thermal vias, if used, should be filled or tented to avoid solder loss during reflow process

Microchip Technology Drawing C04-23511 Rev A

chanhvinh.com

40.8 32-Pin TQFP

32-Lead Plastic Thin Quad Flatpack (PT) - 7x7x1.0 mm Body [TQFP] 2.00 mm Footprint; Also Atmel Legacy Global Package Code AUT

Note: For the most current package drawings, please see the Microchip Packaging Specification located at http://www.microchip.com/packaging

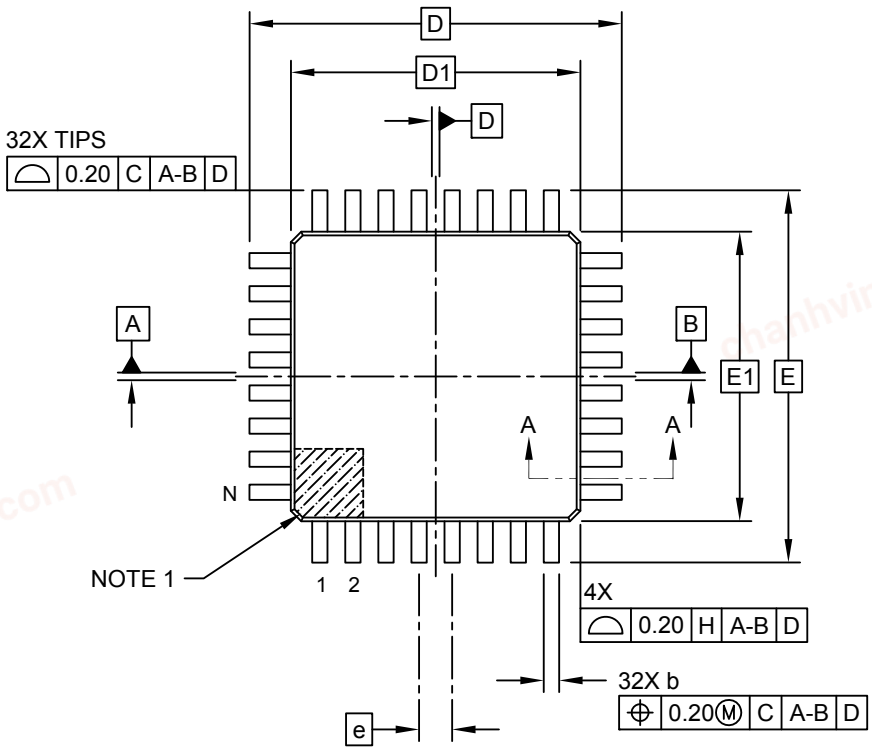

TOP VIEW

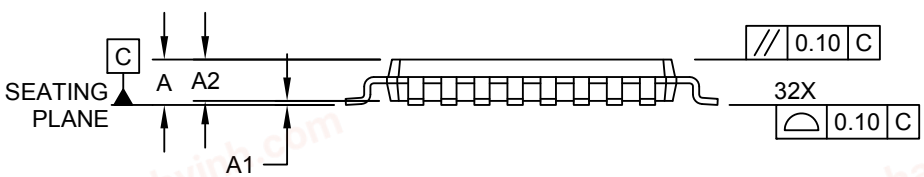

SIDE VIEW

© 2021 Microchip Technology Inc. and its subsidiaries

chanhvinh.com

32-Lead Plastic Thin Quad Flatpack (PT) - 7x7x1.0 mm Body [TQFP]
2.00 mm Footprint; Also Atmel Legacy Global Package Code AUT

Note: For the most current package drawings, please see the Microchip Packaging Specification located at http://www.microchip.com/packaging

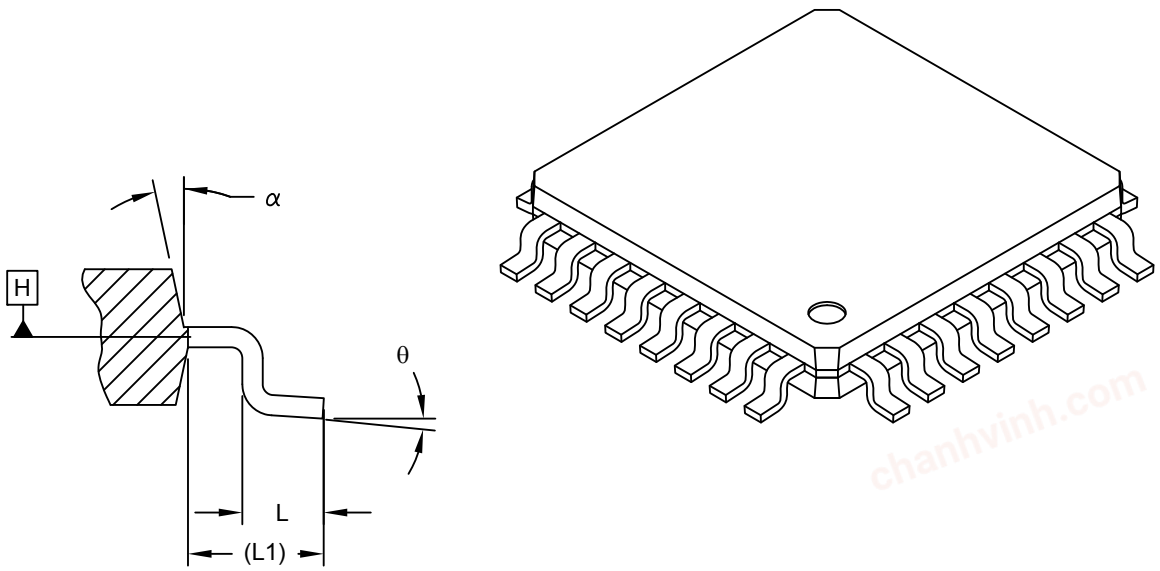

SECTION A-A

Units		MILLIMETERS		
Dimension Limits		MIN	NOM	MAX
Number of Leads	N		32	
Lead Pitch	e		0.80 BSC	
Overall Height	A	-	-	1.20
Standoff	A1	0.05	-	0.15
Molded Package Thickness	A2	0.95	1.00	1.05
Foot Length	L	0.45	0.60	0.75
Footprint	L1		1.00 REF	
Foot Angle	θ	0°	-	7°
Overall Width	E		9.00 BSC	
Overall Length	D		9.00 BSC	
Molded Package Width	E1		7.00 BSC	
Molded Package Length	D1		7.00 BSC	
Lead Width	b	0.30	0.37	0.45
Mold Draft Angle Top	α	11°	-	13°

Notes:

1. Pin 1 visual index feature may vary, but must be located within the hatched area.
2. Dimensioning and tolerancing per ASME Y14.5M

   BSC: Basic Dimension. Theoretically exact value shown without tolerances.
   REF: Reference Dimension, usually without tolerance, for information purposes only.

Microchip Technology Drawing C04-074 Rev C Sheet 2 of 2

chanhvinh.com

32-Lead Thin Plastic Quad Flatpack (PT) - 7x7 mm Body [TQFP]
2.00 mm Footprint; Also Atmel Legacy Global Package Code AUT

Note: For the most current package drawings, please see the Microchip Packaging Specification located at http://www.microchip.com/packaging

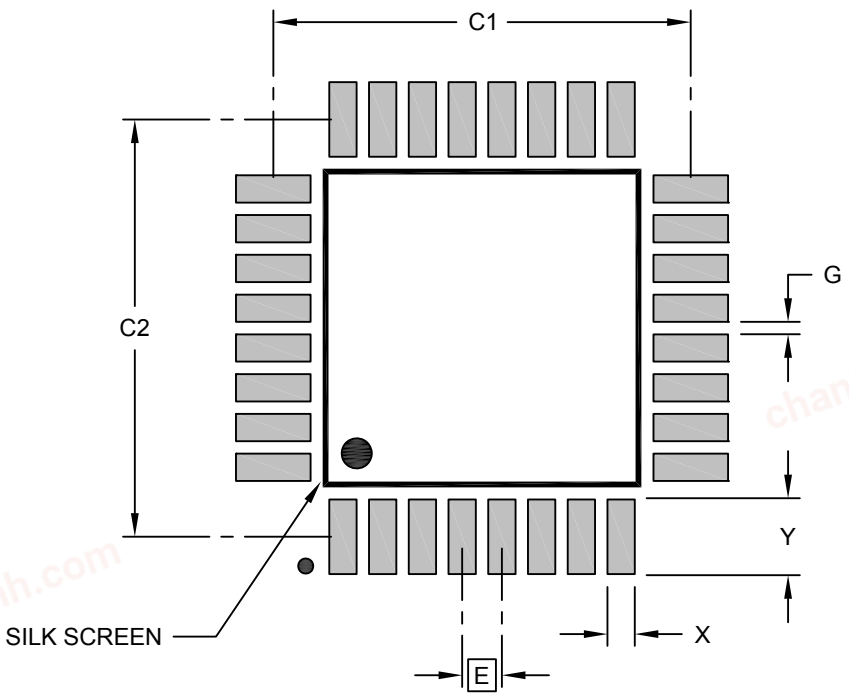

RECOMMENDED LAND PATTERN

Units		MILLIMETERS		
Dimension Limits		MIN	NOM	MAX
Contact Pitch	E		0.80 BSC	
Contact Pad Spacing	C1		8.40	
Contact Pad Spacing	C2		8.40	
Contact Pad Width (Xnn)	X			0.55
Contact Pad Length (Xnn)	Y			1.55
Contact Pad to Contact Pad (Xnn)	G	0.25		

Notes:

1. Dimensioning and tolerancing per ASME Y14.5M
   BSC: Basic Dimension. Theoretically exact value shown without tolerances.

Microchip Technology Drawing C04-2074 Rev C

chanhvinh.com

40.9 48-Pin VQFN

48-Lead Very Thin Plastic Quad Flat, No Lead Package (6LX) - 6x6 mm Body [VQFN] With 4.1x4.1 mm Exposed Pad

Note: For the most current package drawings, please see the Microchip Packaging Specification located at http://www.microchip.com/packaging

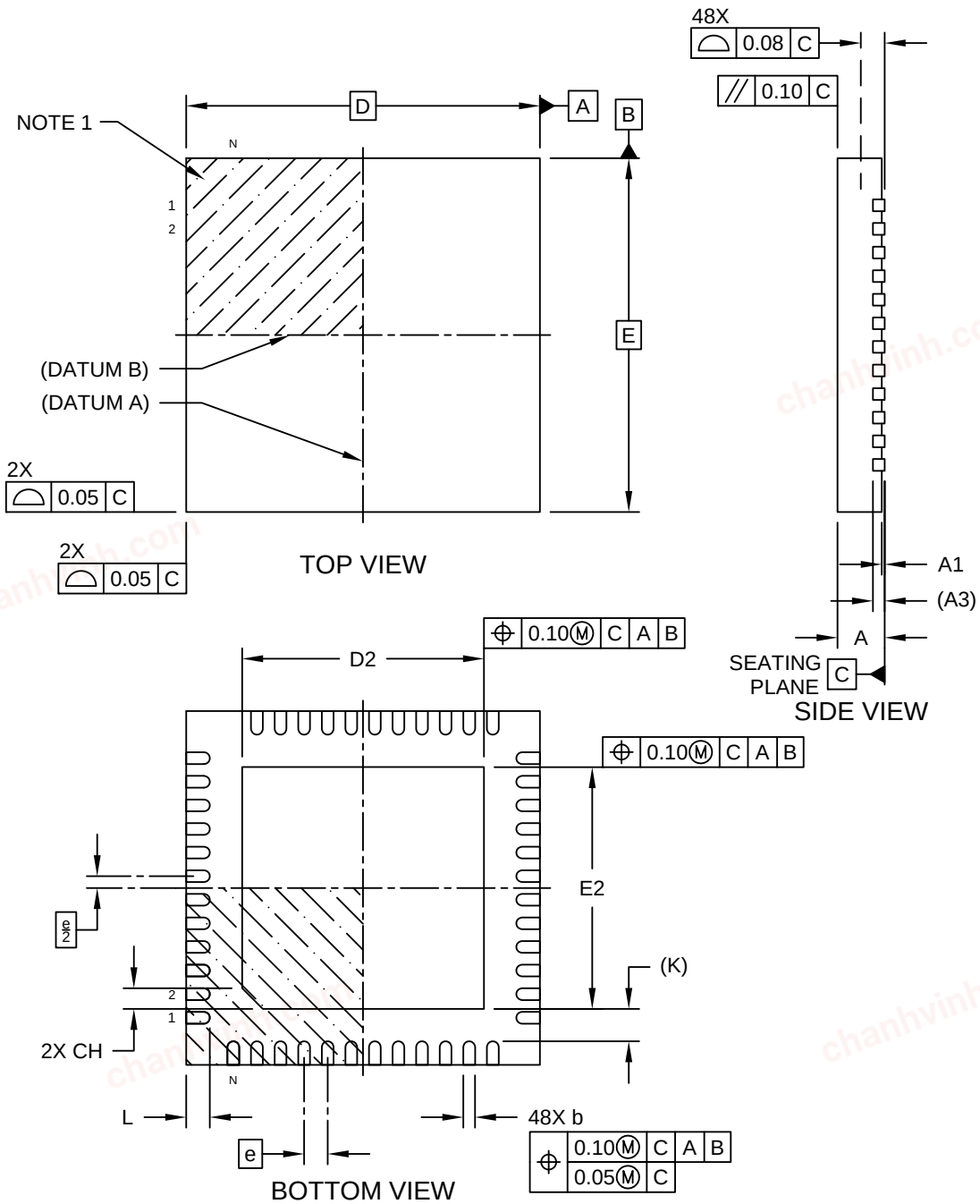

Microchip Technology Drawing C04-494 Rev A Sheet 1 of 2

chanhvinh.com

48-Lead Very Thin Plastic Quad Flat, No Lead Package (6LX) - 6x6 mm Body [VQFN] With 4.1x4.1 mm Exposed Pad

Note: For the most current package drawings, please see the Microchip Packaging Specification located at http://www.microchip.com/packaging

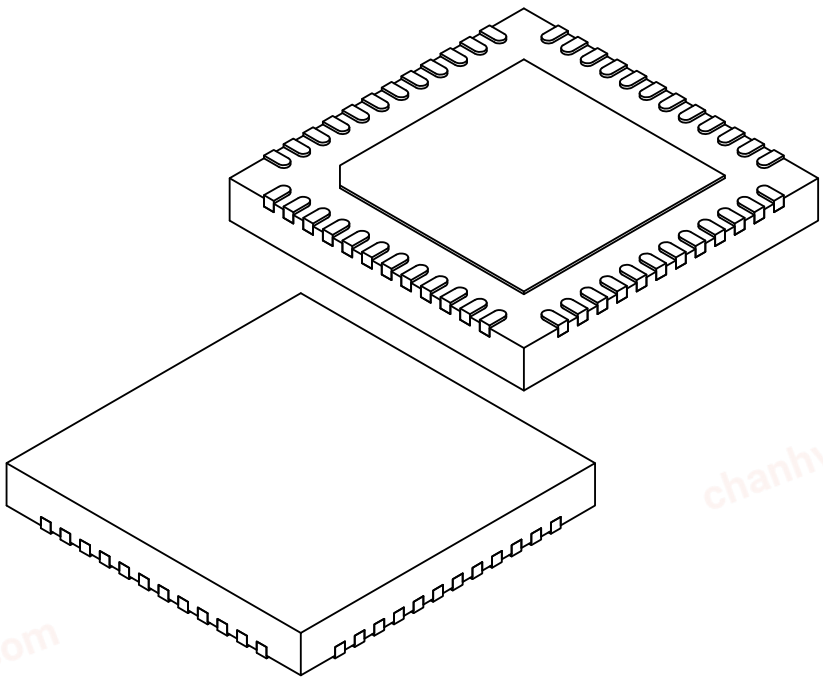

Units		MILLIMETERS		
Dimension Limits		MIN	NOM	MAX
Number of Terminals	N		48	
Pitch	e		0.40 BSC	
Overall Height	A	0.80	0.85	0.90
Standoff	A1	0.00	0.02	0.05
Terminal Thickness	A3		0.20 REF	
Overall Length	D		6.00 BSC	
Exposed Pad Length	D2	4.00	4.10	4.20
Overall Width	E		6.00 BSC	
Exposed Pad Width	E2	4.00	4.10	4.20
Exposed Pad Corner Chamfer	CH		0.35 REF	
Terminal Width	b	0.15	0.20	0.25
Terminal Length	L	0.30	0.40	0.50
Terminal-to-Exposed-Pad	K		0.55 REF	

Notes:

1. Pin 1 visual index feature may vary, but must be located within the hatched area.
2. Package is saw singulated
3. Dimensioning and tolerancing per ASME Y14.5M

   BSC: Basic Dimension. Theoretically exact value shown without tolerances.
   REF: Reference Dimension, usually without tolerance, for information purposes only.

Microchip Technology Drawing C04-494 Rev A Sheet 1 of 2

chanhvinh.com

48-Lead Very Thin Plastic Quad Flat, No Lead (6LX) - 6x6 mm Body [VQFN] With 4.1x4.1 mm Exposed Pad

Note: For the most current package drawings, please see the Microchip Packaging Specification located at http://www.microchip.com/packaging

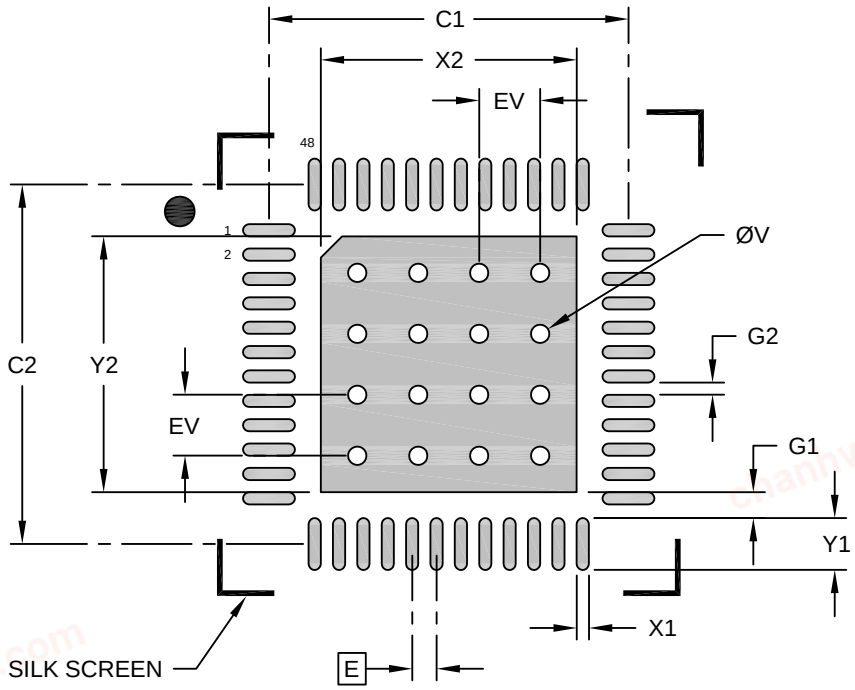

RECOMMENDED LAND PATTERN

Units		MILLIMETERS		
Dimension Limits		MIN	NOM	MAX
Contact Pitch	E		0.40 BSC	
Optional Center Pad Width	X2			4.20
Optional Center Pad Length	Y2			4.20
Contact Pad Spacing	C1		5.90	
Contact Pad Spacing	C2		5.90	
Contact Pad Width (X48)	X1			0.20
Contact Pad Length (X48)	Y1			0.85
Contact Pad to Center Pad (X48)	G1	0.20		
Contact Pad to Contact Pad (X44)	G2	0.20		
Thermal Via Diameter	V		0.30	
Thermal Via Pitch	EV		1.00	

Notes:

1. Dimensioning and tolerancing per ASME Y14.5M
   BSC: Basic Dimension. Theoretically exact value shown without tolerances.
2. For best soldering results, thermal vias, if used, should be filled or tented to avoid solder loss during reflow process

Microchip Technology Drawing C04-2494 Rev A

chanhvinh.com

40.10 48-Pin VQFN Wettable Flanks

48-Lead Very Thin Plastic Quad Flat, No Lead Package (6MX) - 6x6 mm Body [VQFN] With 4.1x4.1 mm Exposed Pad and Stepped Wettable Flanks

Note: For the most current package drawings, please see the Microchip Packaging Specification located at http://www.microchip.com/packaging

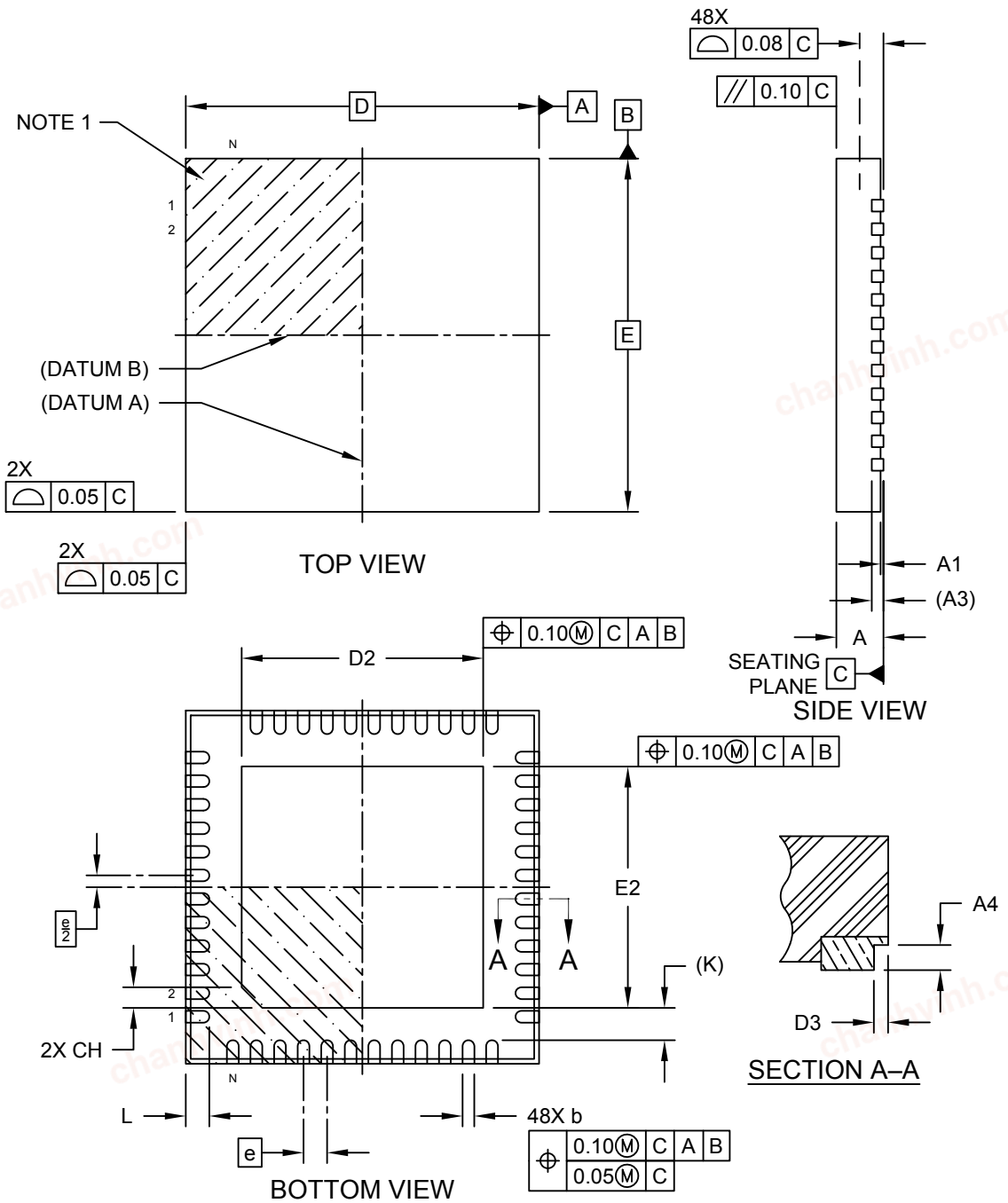

Microchip Technology Drawing C04-504 Rev A Sheet 1 of 2

chanhvinh.com

48-Lead Very Thin Plastic Quad Flat, No Lead Package (6MX) - 6x6 mm Body [VQFN] With 4.1x4.1 mm Exposed Pad and Stepped Wettable Flanks

Note: For the most current package drawings, please see the Microchip Packaging Specification located at http://www.microchip.com/packaging

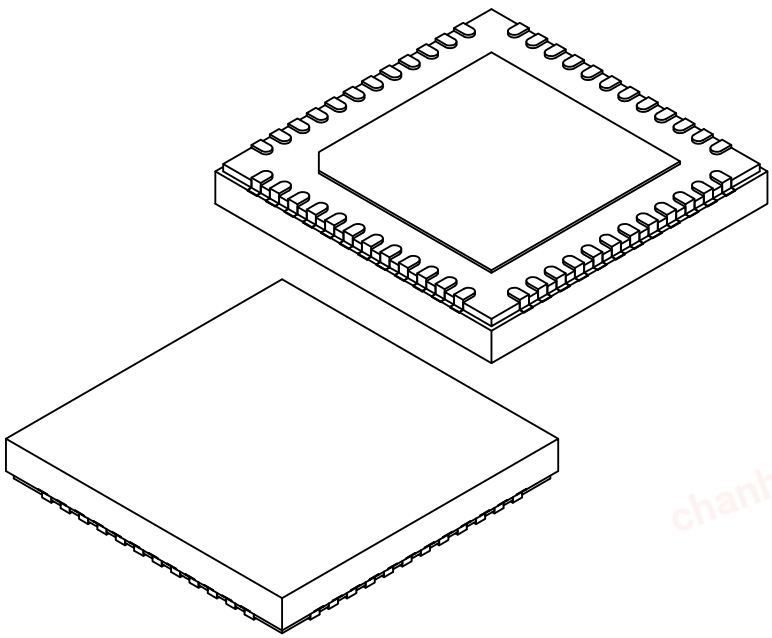

Units		MILLIMETERS		
Dimension Limits		MIN	NOM	MAX
Number of Terminals	N		48	
Pitch	e		0.40 BSC	
Overall Height	A	0.80	0.85	0.90
Standoff	A1	0.00	0.02	0.05
Terminal Thickness	A3		0.20 REF	
Overall Length	D		6.00 BSC	
Exposed Pad Length	D2	4.00	4.10	4.20
Overall Width	E		6.00 BSC	
Exposed Pad Width	E2	4.00	4.10	4.20
Exposed Pad Corner Chamfer	CH		0.35 REF	
Terminal Width	b	0.15	0.20	0.25
Terminal Length	L	0.30	0.40	0.50
Terminal-to-Exposed-Pad	K		0.55 REF	
Wettable Flank Step Length	D3	-	-	0.085
Wettable Flank Step Height	A4	0.10	-	0.19

Notes:

1. Pin 1 visual index feature may vary, but must be located within the hatched area.
2. Package is saw singulated
3. Dimensioning and tolerancing per ASME Y14.5M
   BSC: Basic Dimension. Theoretically exact value shown without tolerances.
   REF: Reference Dimension, usually without tolerance, for information purposes only.

Microchip Technology Drawing C04-504 Rev A Sheet 2 of 2

© 2021 Microchip Technology Inc.
and its subsidiaries

chanhvinh.com

48-Lead Very Thin Plastic Quad Flat, No Lead Package (6MX) - 6x6 mm Body [VQFN] With 4.1x4.1 mm Exposed Pad and Stepped Wettable Flanks

Note: For the most current package drawings, please see the Microchip Packaging Specification located at http://www.microchip.com/packaging

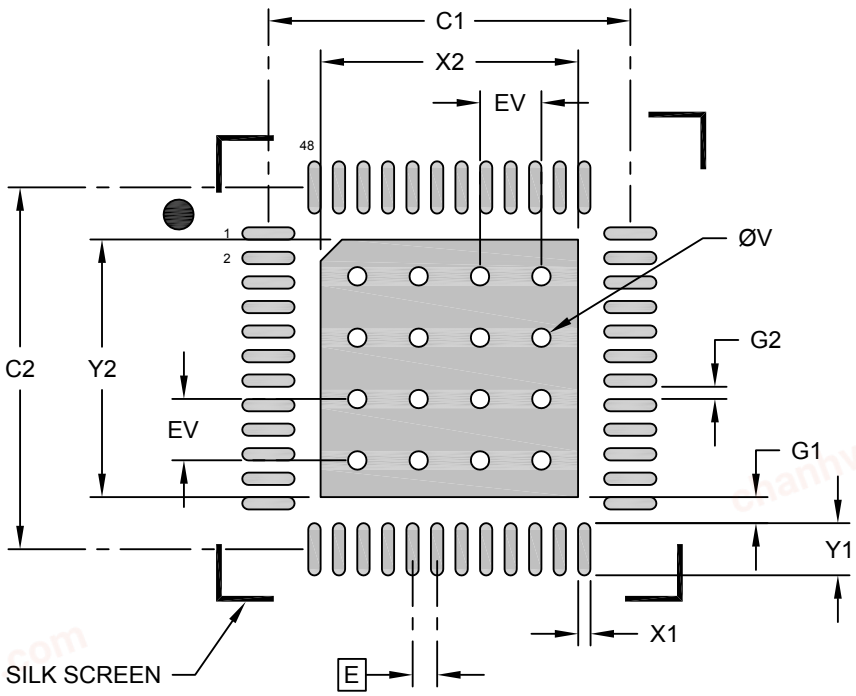

RECOMMENDED LAND PATTERN

Units		MILLIMETERS		
Dimension Limits		MIN	NOM	MAX
Contact Pitch	E		0.40 BSC	
Optional Center Pad Width	X2			4.20
Optional Center Pad Length	Y2			4.20
Contact Pad Spacing	C1		5.90	
Contact Pad Spacing	C2		5.90	
Contact Pad Width (X48)	X1			0.20
Contact Pad Length (X48)	Y1			0.85
Contact Pad to Center Pad (X48)	G1	0.20		
Contact Pad to Contact Pad (X44)	G2	0.20		
Thermal Via Diameter	V		0.30	
Thermal Via Pitch	EV		1.00	

Notes:

1. Dimensioning and tolerancing per ASME Y14.5M
   BSC: Basic Dimension. Theoretically exact value shown without tolerances.
2. For best soldering results, thermal vias, if used, should be filled or tented to avoid solder loss during reflow process

Microchip Technology Drawing C04-2504 Rev A

chanhvinh.com

40.11 48-Pin TQFP

48-Lead Plastic Thin Quad Flatpack (PT) - 7x7x1.0 mm Body [TQFP]

Note: For the most current package drawings, please see the Microchip Packaging Specification located at http://www.microchip.com/packaging

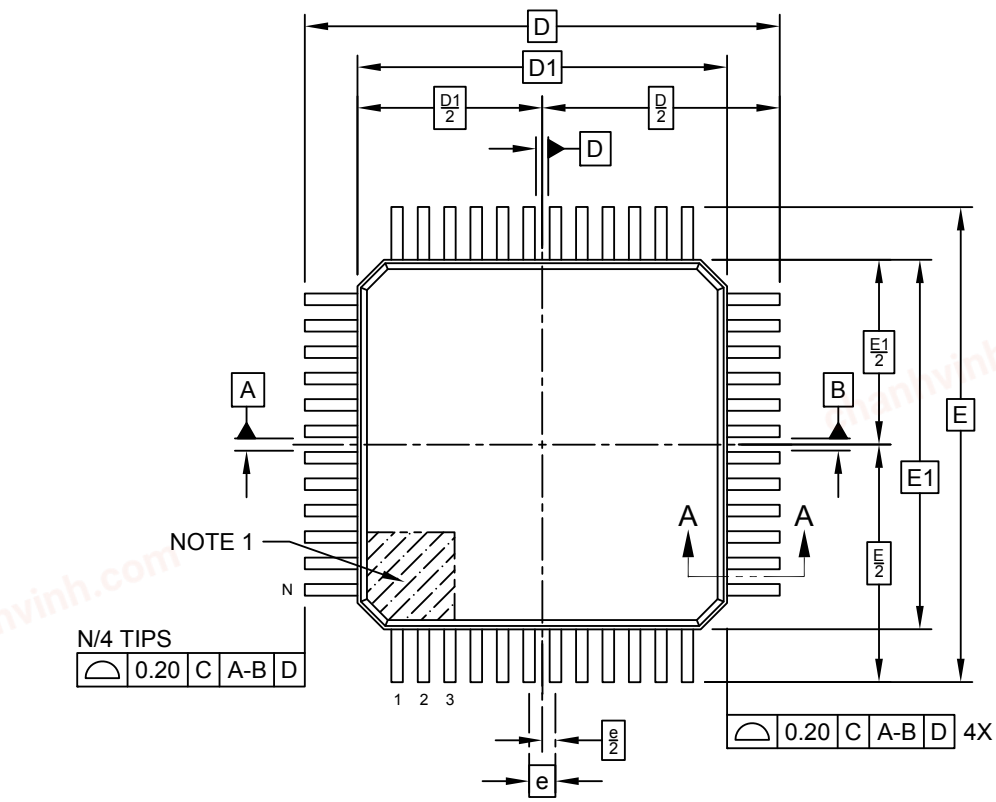

TOP VIEW

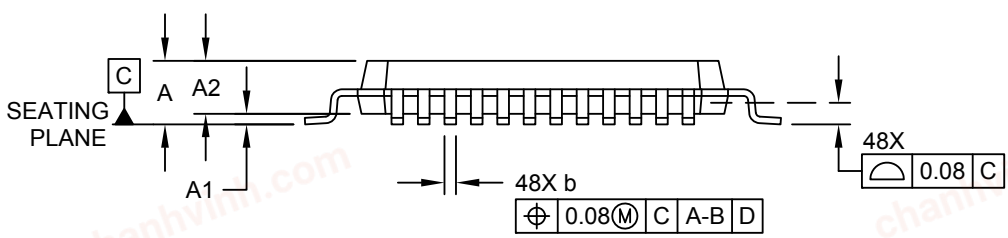

SIDE VIEW

Microchip Technology Drawing C04-300-PT Rev D Sheet 1 of 2

chanhvinh.com

48-Lead Plastic Thin Quad Flatpack (PT) - 7x7x1.0 mm Body [TQFP]

Note: For the most current package drawings, please see the Microchip Packaging Specification located at http://www.microchip.com/packaging

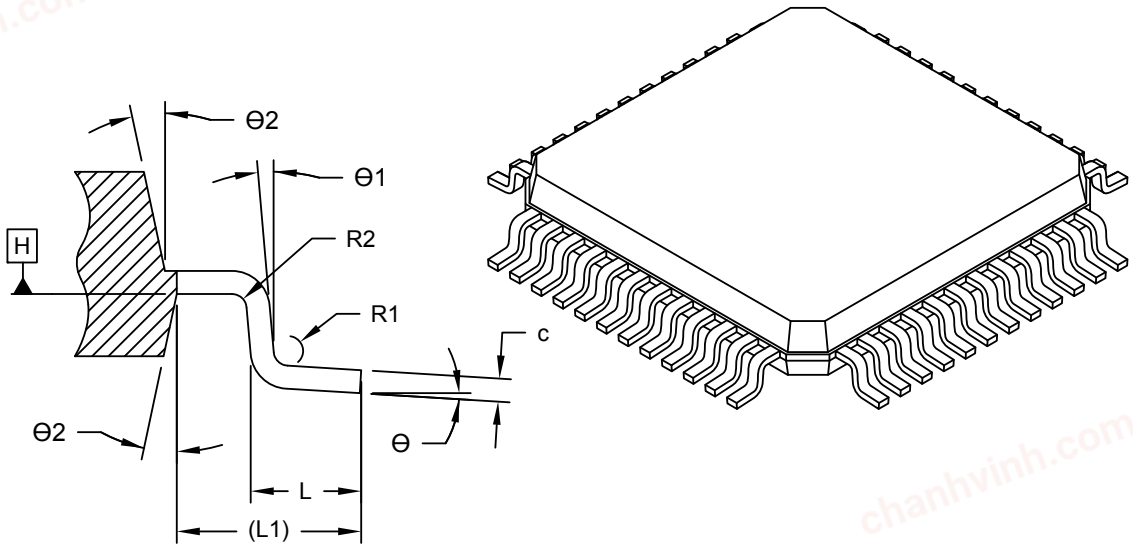

SECTION A-A

Units		MILLIMETERS		
Dimension Limits		MIN	NOM	MAX
Number of Terminals	N		48	
Pitch	e		0.50 BSC	
Overall Height	A	-	-	1.20
Standoff	A1	0.05	-	0.15
Molded Package Thickness	A2	0.95	1.00	1.05
Overall Length	D		9.00 BSC	
Molded Package Length	D1		7.00 BSC	
Overall Width	E		9.00 BSC	
Molded Package Width	E1		7.00 BSC	
Terminal Width	b	0.17	0.22	0.27
Terminal Thickness	c	0.09	-	0.16
Terminal Length	L	0.45	0.60	0.75
Footprint	L1		1.00 REF	
Lead Bend Radius	R1	0.08	-	-
Lead Bend Radius	R2	0.08	-	0.20
Foot Angle	Θ	0°	3.5°	7°
Lead Angle	Θ1	0°	-	-
Mold Draft Angle	Θ2	11°	12°	13°

Notes:

1. Pin 1 visual index feature may vary, but must be located within the hatched area.
2. Dimensioning and tolerancing per ASME Y14.5M
   BSC: Basic Dimension. Theoretically exact value shown without tolerances.
   REF: Reference Dimension, usually without tolerance, for information purposes only.

Microchip Technology Drawing C04-300-PT Rev D Sheet 2 of 2

chanhvinh.com

48-Lead Plastic Thin Quad Flatpack (PT) - 7x7x1.0 mm Body [TQFP]

Note: For the most current package drawings, please see the Microchip Packaging Specification located at http://www.microchip.com/packaging

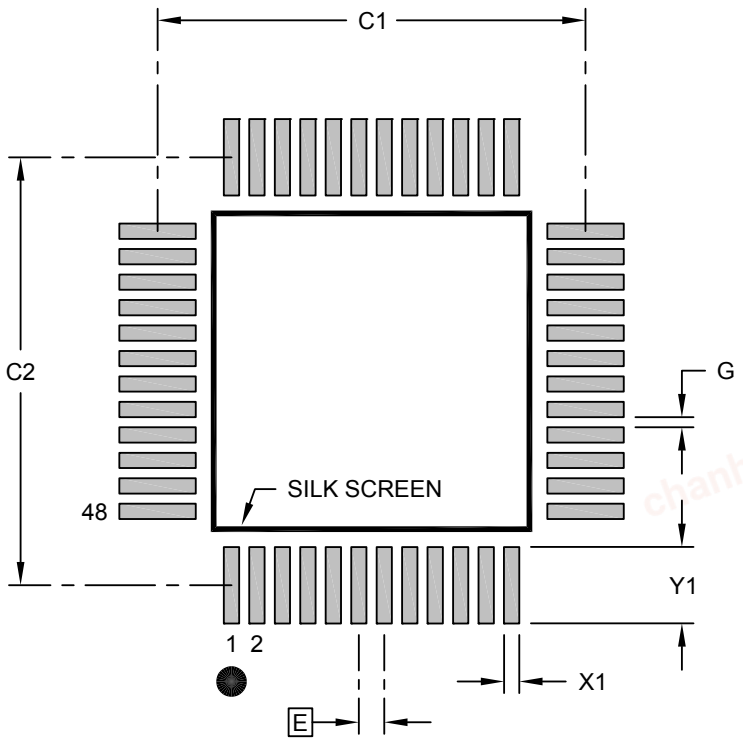

RECOMMENDED LAND PATTERN

Units		MILLIMETERS		
Dimension Limits		MIN	NOM	MAX
Contact Pitch	E		0.50 BSC	
Contact Pad Spacing	C1		8.40	
Contact Pad Spacing	C2		8.40	
Contact Pad Width (X48)	X1			0.30
Contact Pad Length (X48)	Y1			1.50
Distance Between Pads	G	0.20		

Notes:

1. Dimensioning and tolerancing per ASME Y14.5M
   BSC: Basic Dimension. Theoretically exact value shown without tolerances.
2. For best soldering results, thermal vias, if used, should be filled or tented to avoid solder loss during reflow process

Microchip Technology Drawing C04-2300-PT Rev D

chanhvinh.com

40.12 64-Pin VQFN

64-Lead Very Thin Plastic Quad Flat, No Lead Package (R4X) – 9x9x0.9 mm Body [VQFN]
With 7.15 x 7.15 Exposed Pad [Also called QFN]

Note: For the most current package drawings, please see the Microchip Packaging Specification located at http://www.microchip.com/packaging

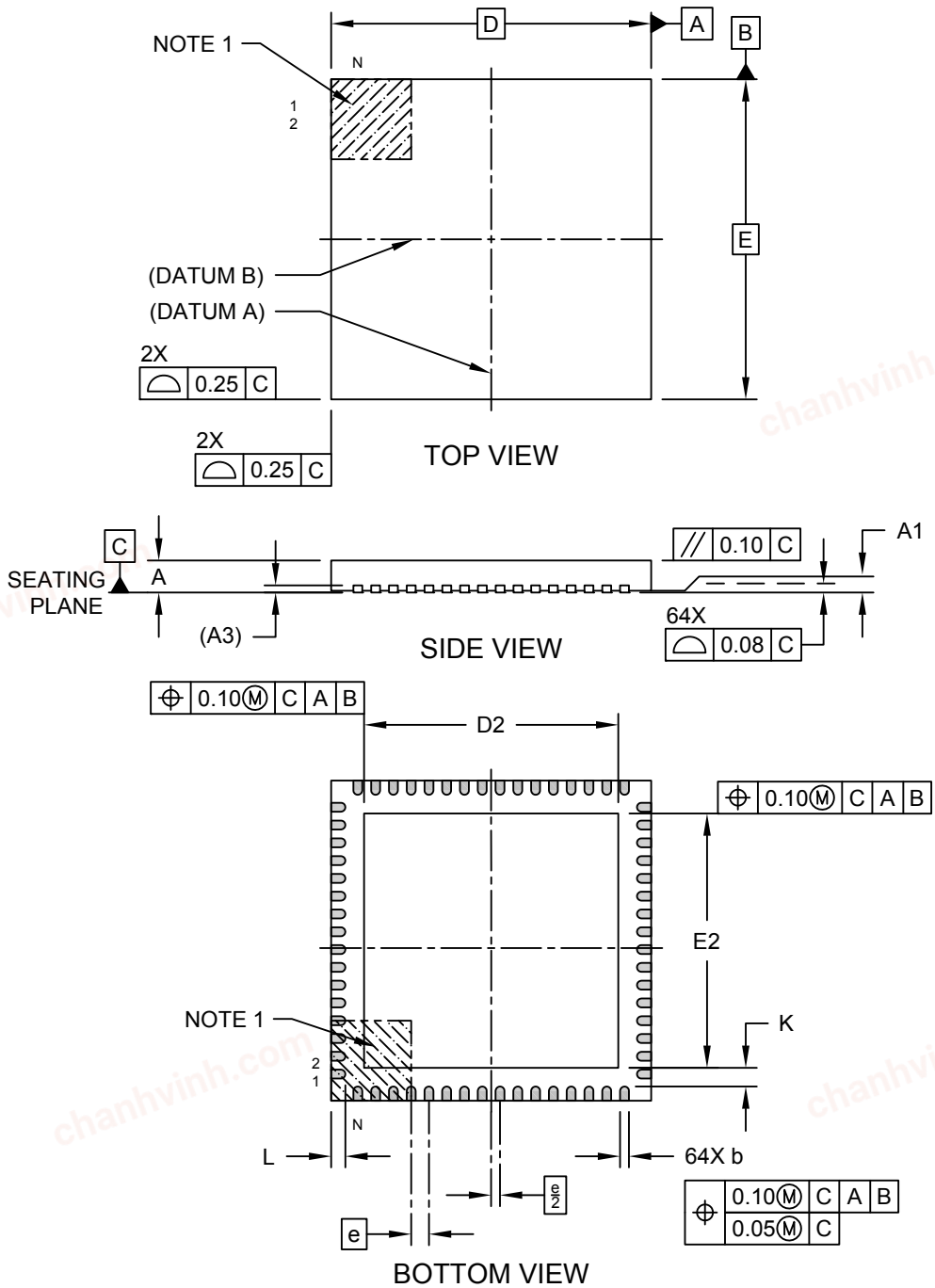

Microchip Technology Drawing C04-149 [R4X] Rev E Sheet 1 of 2

chanhvinh.com

**64-Lead Very Thin Plastic Quad Flat, No Lead Package (R4X) – 9x9x0.9 mm Body [VQFN]
With 7.15 x 7.15 Exposed Pad [Also called QFN]**

Note: For the most current package drawings, please see the Microchip Packaging Specification located at http://www.microchip.com/packaging

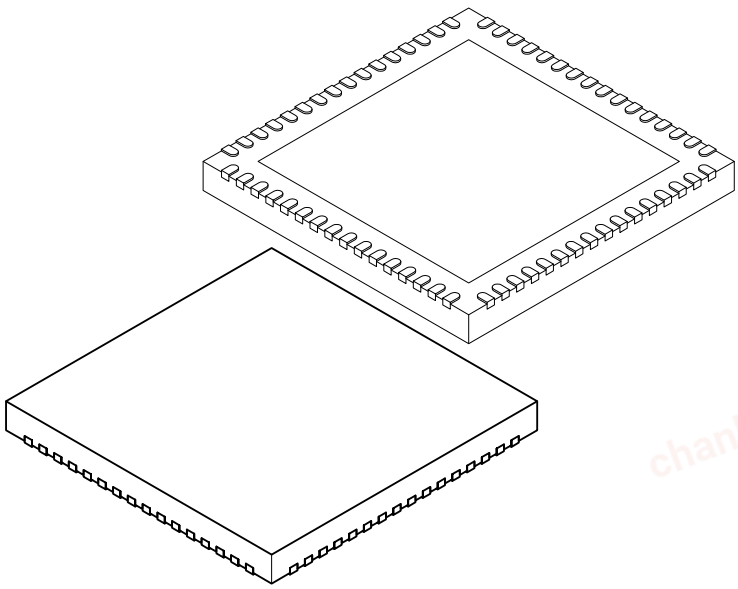

Units		MILLIMETERS		
Dimension Limits		MIN	NOM	MAX
Number of Pins	N		64	
Pitch	e		0.50 BSC	
Overall Height	A	0.80	0.90	1.00
Standoff	A1	0.00	0.02	0.05
Contact Thickness	A3		0.20 REF	
Overall Width	E		9.00 BSC	
Exposed Pad Width	E2	7.05	7.15	7.25
Overall Length	D		9.00 BSC	
Exposed Pad Length	D2	7.05	7.15	7.25
Contact Width	b	0.18	0.25	0.30
Contact Length	L	0.30	0.40	0.50
Contact-to-Exposed Pad	K	0.20	-	-

Notes:

1. Pin 1 visual index feature may vary, but must be located within the hatched area.
2. Package is saw singulated
3. Dimensioning and tolerancing per ASME Y14.5M

BSC: Basic Dimension. Theoretically exact value shown without tolerances.
REF: Reference Dimension, usually without tolerance, for information purposes only.

Microchip Technology Drawing C04-149 [R4X] Rev E Sheet 2 of 2

© 2021 Microchip Technology Inc.
and its subsidiaries

chanhvinh.com

**64-Lead Very Thin Plastic Quad Flat, No Lead Package (R4X) – 9x9x0.9 mm Body [VQFN]
With 7.15 x 7.15 Exposed Pad [Also called QFN]**

Note: For the most current package drawings, please see the Microchip Packaging Specification located at http://www.microchip.com/packaging

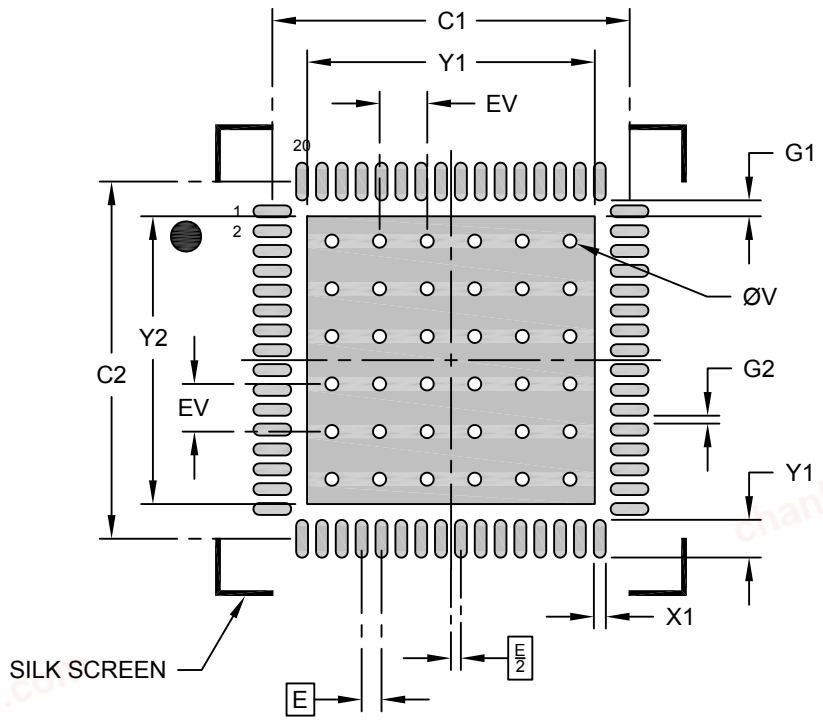

RECOMMENDED LAND PATTERN

Units		MILLIMETERS		
Dimension Limits		MIN	NOM	MAX
Contact Pitch	E		0.50 BSC	
Optional Center Pad Width	X2			7.25
Optional Center Pad Length	Y2			7.25
Contact Pad Spacing	C1		9.00	
Contact Pad Spacing	C2		9.00	
Contact Pad Width (X64)	X1			0.30
Contact Pad Length (X64)	Y1			0.95
Contact Pad to Center Pad (X64)	G1	0.40		
Spacing Between Contact Pads (X60)	G2	0.20		
Thermal Via Diameter	V		0.33	
Thermal Via Pitch	EV		1.20	

Notes:

1. Dimensioning and tolerancing per ASME Y14.5M
   BSC: Basic Dimension. Theoretically exact value shown without tolerances.
2. For best soldering results, thermal vias, if used, should be filled or tented to avoid solder loss during reflow process

Microchip Technology Drawing C04-149 [R4X] Rev E

chanhvinh.com

40.13 64-Pin VQFN Wettable Flanks

64-Lead Very Thin Plastic Quad Flat, No Lead Package (5LX) - 9x9x1.0 mm Body [VQFN] With 5.4 mm Exposed Pad and Stepped Wettable Flanks

Note: For the most current package drawings, please see the Microchip Packaging Specification located at http://www.microchip.com/packaging

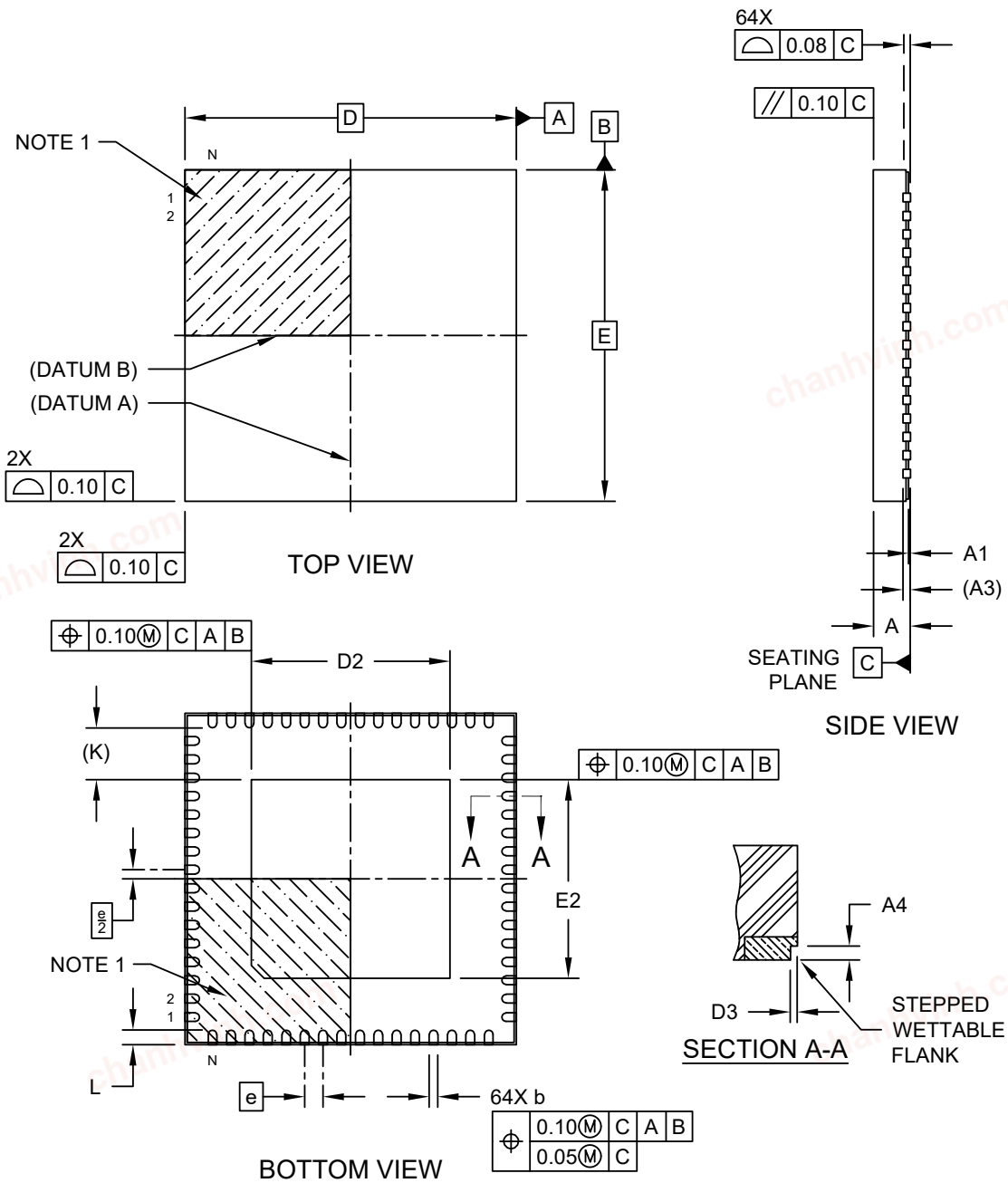

Microchip Technology Drawing C04-483 Rev E Sheet 1 of 2

chanhvinh.com

64-Lead Very Thin Plastic Quad Flat, No Lead Package (5LX) - 9x9x1.0 mm Body [VQFN] With 5.4 mm Exposed Pad and Stepped Wettable Flanks

Note: For the most current package drawings, please see the Microchip Packaging Specification located at http://www.microchip.com/packaging

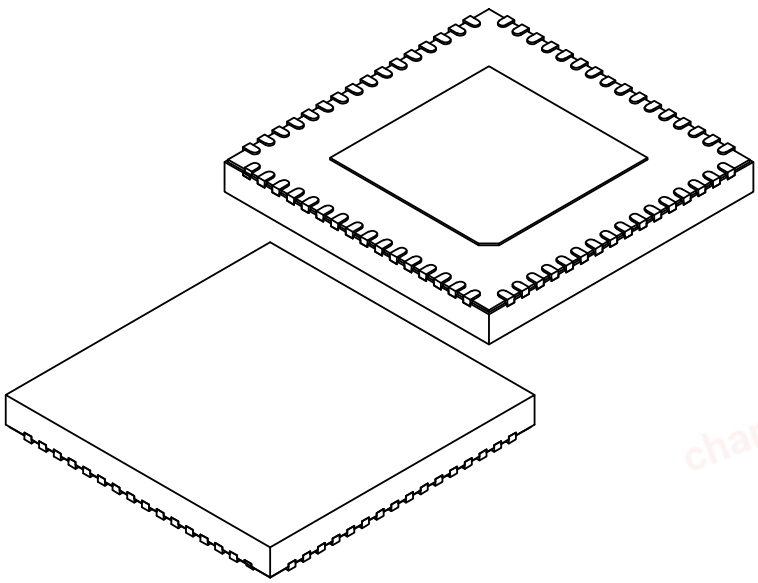

Units		MILLIMETERS		
Dimension Limits		MIN	NOM	MAX
Number of Terminals	N		64	
Pitch	e		0.50 BSC	
Overall Height	A	0.80	0.90	1.00
Standoff	A1	0.00	0.02	0.05
Terminal Thickness	A3		0.203 REF	
Overall Length	D		9.00 BSC	
Exposed Pad Length	D2	5.30	5.40	5.50
Overall Width	E		9.00 BSC	
Exposed Pad Width	E2	5.30	5.40	5.50
Terminal Width	b	0.20	0.25	0.30
Terminal Length	L	0.30	0.40	0.50
Terminal-to-Exposed-Pad	K		1.40 REF	
Wettable Flank Step Length	D3	0.035	0.060	0.085
Wettable Flank Step Height	A4	0.10	-	0.19

Notes:

1. Pin 1 visual index feature may vary, but must be located within the hatched area.
2. Package is saw singulated
3. Dimensioning and tolerancing per ASME Y14.5M
   BSC: Basic Dimension. Theoretically exact value shown without tolerances.
   REF: Reference Dimension, usually without tolerance, for information purposes only.

Microchip Technology Drawing C04-483 Rev E Sheet 2 of 2

chanhvinh.com

64-Lead Very Thin Plastic Quad Flat, No Lead Package (5LX) - 9x9x1.0 mm Body [VQFN] With 5.4 mm Exposed Pad and Stepped Wettable Flanks

Note: For the most current package drawings, please see the Microchip Packaging Specification located at http://www.microchip.com/packaging

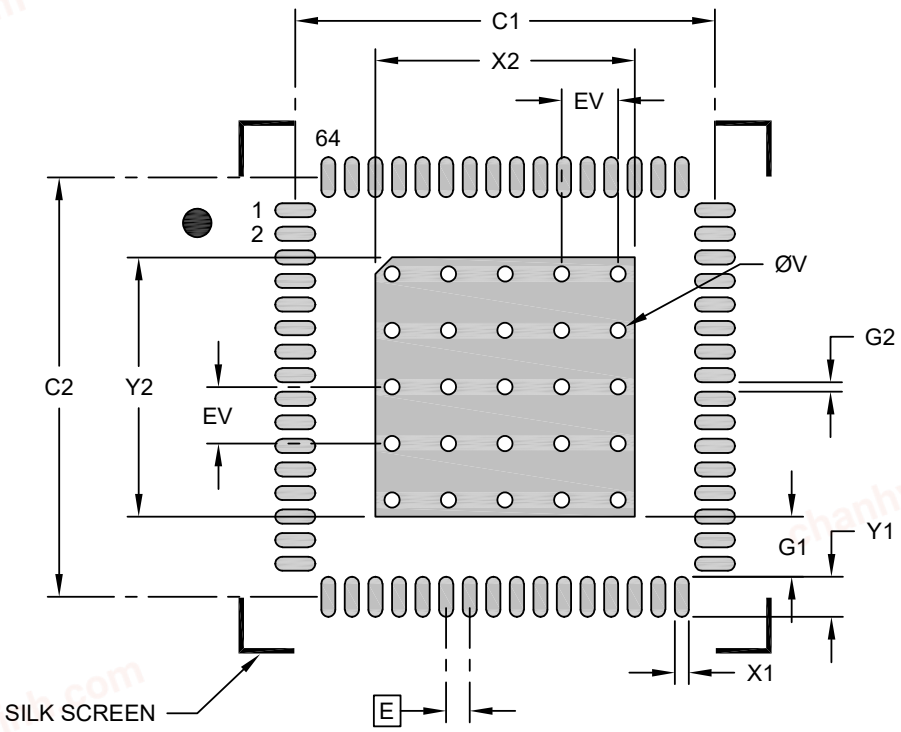

RECOMMENDED LAND PATTERN

Units		MILLIMETERS		
Dimension Limits		MIN	NOM	MAX
Contact Pitch	E		0.50 BSC	
Optional Center Pad Width	X2			5.50
Optional Center Pad Length	Y2			5.50
Contact Pad Spacing	C1		8.90	
Contact Pad Spacing	C2		8.90	
Contact Pad Width (X64)	X1			0.30
Contact Pad Length (X64)	Y1			0.85
Contact Pad to Center Pad (X64)	G1	1.28		
Contact Pad to Contact Pad (X60)	G2	0.20		
Thermal Via Diameter	V		0.33	
Thermal Via Pitch	EV		1.20	

Notes:

1. Dimensioning and tolerancing per ASME Y14.5M
   BSC: Basic Dimension. Theoretically exact value shown without tolerances.
2. For best soldering results, thermal vias, if used, should be filled or tented to avoid solder loss during reflow process

Microchip Technology Drawing C04-2483 Rev E

chanhvinh.com

40.14 64-Pin TQFP

64-Lead Plastic Thin Quad Flatpack (PT)-10x10x1 mm Body, 2.00 mm Footprint [TQFP]

Note: For the most current package drawings, please see the Microchip Packaging Specification located at http://www.microchip.com/packaging

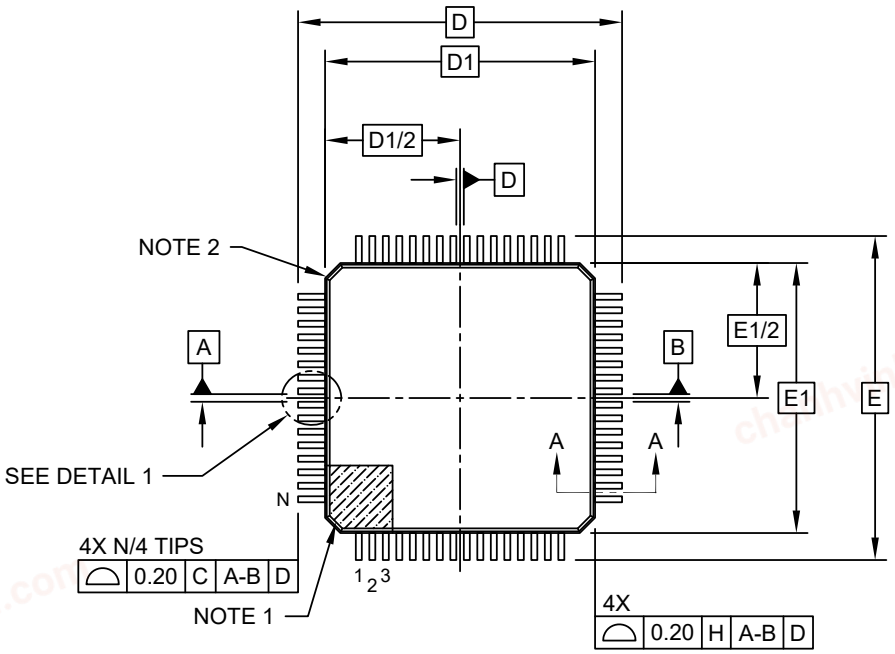

TOP VIEW

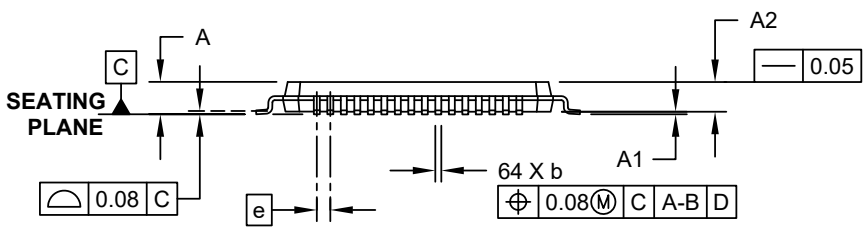

SIDE VIEW

Microchip Technology Drawing C04-085C Sheet 1 of 2

chanhvinh.com

64-Lead Plastic Thin Quad Flatpack (PT)-10x10x1 mm Body, 2.00 mm Footprint [TQFP]

Note: For the most current package drawings, please see the Microchip Packaging Specification located at http://www.microchip.com/packaging

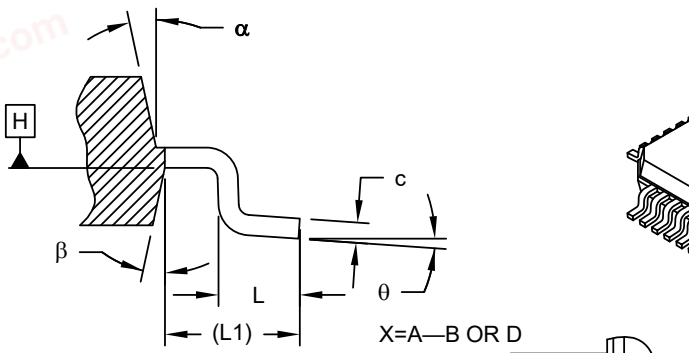

SECTION A-A

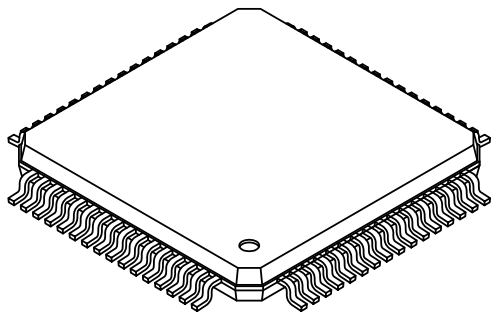

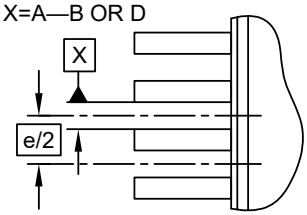

DETAIL 1

Units		MILLIMETERS		
Dimension Limits		MIN	NOM	MAX
Number of Leads	N		64	
Lead Pitch	e		0.50 BSC	
Overall Height	A	-	-	1.20
Molded Package Thickness	A2	0.95	1.00	1.05
Standoff	A1	0.05	-	0.15
Foot Length	L	0.45	0.60	0.75
Footprint	L1		1.00 REF	
Foot Angle	ϕ	0°	3.5°	7°
Overall Width	E		12.00 BSC	
Overall Length	D		12.00 BSC	
Molded Package Width	E1		10.00 BSC	
Molded Package Length	D1		10.00 BSC	
Lead Thickness	c	0.09	-	0.20
Lead Width	b	0.17	0.22	0.27
Mold Draft Angle Top	α	11°	12°	13°
Mold Draft Angle Bottom	β	11°	12°	13°

Notes:

1. Pin 1 visual index feature may vary, but must be located within the hatched area.
2. Chamfers at corners are optional; size may vary.
3. Dimensions D1 and E1 do not include mold flash or protrusions. Mold flash or protrusions shall not exceed 0.25mm per side.
4. Dimensioning and tolerancing per ASME Y14.5M

BSC: Basic Dimension. Theoretically exact value shown without tolerances.
REF: Reference Dimension, usually without tolerance, for information purposes only.

Microchip Technology Drawing C04-085C Sheet 2 of 2

chanhvinh.com

64-Lead Plastic Thin Quad Flatpack (PT)-10x10x1 mm Body, 2.00 mm Footprint [TQFP]

Note: For the most current package drawings, please see the Microchip Packaging Specification located at http://www.microchip.com/packaging

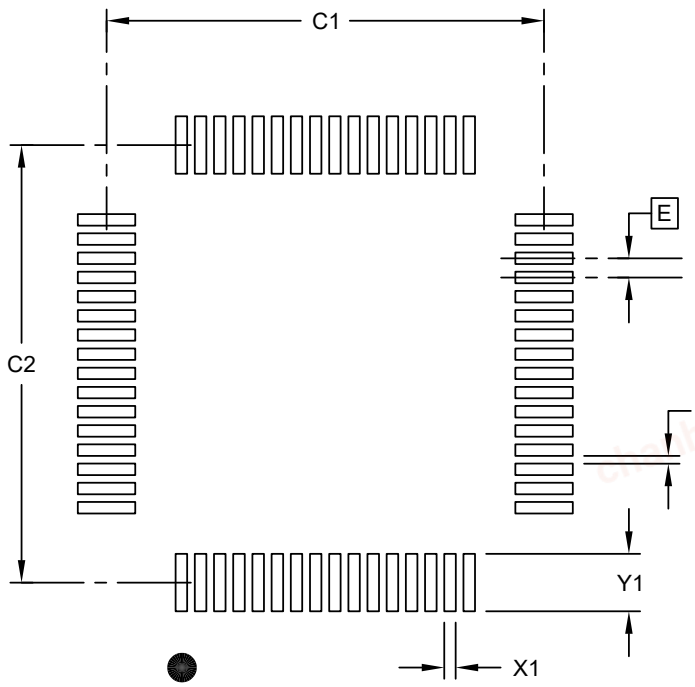

RECOMMENDED LAND PATTERN

Units		MILLIMETERS		
Dimension Limits		MIN	NOM	MAX
Contact Pitch	E		0.50 BSC	
Contact Pad Spacing	C1		11.40	
Contact Pad Spacing	C2		11.40	
Contact Pad Width (X28)	X1			0.30
Contact Pad Length (X28)	Y1			1.50
Distance Between Pads	G	0.20		

Notes:

1. Dimensioning and tolerancing per ASME Y14.5M

BSC: Basic Dimension. Theoretically exact value shown without tolerances.

Microchip Technology Drawing C04-2085B Sheet 1 of 1

chanhvinh.com

41. Data Sheet Revision History

Note: The data sheet revision is independent of the die revision and the device variant (last letter of the ordering number).

41.1 Rev. B - 06/2021

Section	Changes
Document	• General improvement of the documentation and its structure • Updated terminology used throughout the data sheet: – *Master* is replaced by *host* – *Slave* is replaced by *client*
Device	• Memories – Improved BODCFG fuse description • Peripherals and Architecture – Updated the *Interrupt Vector Mapping* table – Updated the REVID.MAJOR bit field description from *0x00 = A, 0x01 = B* to *0x01 = A, 0x02 = B* • Ordering Information – Added note for automotive-grade ordering codes (VAO suffix) • Package Drawings – Added note in the *Online Package Drawings* section – Added the *Package Marking* section – Updated 64-Pin VQFN style from *MR* to *R4X* – Added 32, 48 and 64-Pin VQFN Wettable Flanks packages
Hardware Guidelines	• Digital Power Supply – Updated primary decoupling capacitor value to 100 nF – Added optional decoupling capacitor (C_3) – Added note
CPU	• Updated the *AVR® CPU Architecture* figure • Improved description for the RAMPZ register
NVMCTRL	• Updated the *NVMCTRL Block Diagram* figure • Removed offset column from the *Available Interrupt Vectors and Sources* table
CLKCTRL	• Updated the *Phase-Locked Loop (PLL)* section. Added initialization example. • The *Auto-Tune* section renamed to *Manual Tuning and Auto-Tune*. Added the new *Manual Tuning* section. • CLKCTRL.PLLCTRLA added to the list of registers requiring Configuration Change Protection (in the *Registers Under Configuration Change Protection* table) • Improved description of the RUNSTBY bit in the OSCHFCTRLA, OSCHFTUNE, PLLCTRLA, OSC32KCTRLA and XOSC32KCTRLA registers • Improved description of the XOSC32KCTRLA bit fields • Updated the name of the MULFAC bit field in the PLLCTRLA register from Frequency Select to Multiplication Factor • Improved description of the PLLCTRLA.MULFAC bit field

© 2021 Microchip Technology Inc.
and its subsidiaries

chanhvinh.com

.....continued

Section	Changes
SLPCTRL	• Improved the *Sleep modes* section • Updated the *Sleep Mode Activity Overview* tables • Added the *Configuration Change Protection* section • Updated description for the VREGCTRL.HTLLEN bit field
RSTCTRL	• Figures updated: – *Block Diagram* – *MCU Start-up, $\overline{RESET}$ Tied to V_{DD}* – *Brown-out Detector Reset* – *External Reset Characteristics* • Figures added: – *Watchdog Reset* – *Software Reset* • Updated the *Logic Domains Affected by Various Resets* table • Updated the *Reset Time* section
CPUINT	• Updated the *CPUINT - Registers under Configuration Change Protection* table • Improved the *Non-Maskable Interrupts* section
PORT	• System Clock renamed to Peripheral clock • Added initialization code example in the *Multi-Pin Configuration* section • Added clarification notes in following sections: – *Multi-Pin Configuration* – *Virtual Ports* – PINCONFIG.ISC bit field description
BOD	• The VLMCTRL register renamed to VLMCTRLA
TCA	• Improved the *Frequency (FRQ) Waveform Generation* section: – Added description on WOn offset – Added the *Offset When Counting Up* and *Inverting Waveform Output* figures – Added the *Offset Equation Overview* table – Added the *Single-Slope Pulse-Width Modulation in Split Mode* figure • Figures updated: – *Timer/Counter Block Diagram* – *Single-Slope Pulse-Width Modulation* – *Dual-Slope Pulse-Width Modulation* • Added clarification notes in the following sections: – *Single-Slope Pulse-Width Modulation* – *Dual-Slope Pulse-Width Modulation* – *Events* • Improved the *Split Mode - Two 8-Bit Timer/Counters* section • Improved bit fields and register description: – Added clarification note in the CTRLC register description – Improved description for the LUPD bit field in the CTRLECLR and CTRLESET registers – Improved description for UPDOWN value of the EVACTA/B bit field in the EVCTRL register
TCB	• General improvement of the documentation

chanhvinh.com

.....continued

Section	Changes
TCD	• Updated the FAULTCTRL register bit fields name: – CMPxEN renamed to CMPEN – CMPx renamed to CMP
RTC	• Removed note from the *RTC Functional Description - Configure RTC* section • Removed note from the *PIT Functional Description - Initialization* section
USART	• Updated terminology: – *Master* is replaced by *host* – *Slave* is replaced by *client*
SPI	• General improvement of the documentation • Updated terminology: – *Master* is replaced by *host* – *Slave* is replaced by *client*
TWI	• Improved description for the *Client Initialization* section • Improved description for register bit fields: – The SDASETUP bit field from the CTRLA register – The INPUTLVL, FMPEN and SDAHOLD bit fields from the DUALCTRL register – The FLUSH bit field from the MCTRLB register – The BUSSTATE bit field from the MSTATUS register – The SCMD bit field from the SCTRLB register
CCL	• Updated the *Truth Table Output Value Selection* figure • Updated the *Linked LUT Input Selection* figure • Improved description for the *TRUTHn* registers • Updated terminology: – *Master* is replaced by *host* – *Slave* is replaced by *client*
ADC	• Added information on warm-up time in the *Sleep Mode Operation* section • Updated the *Temperature Measurement* section to include INITDLY and SAMPLEN configuration in the initialization steps
DAC	• Removed conversion rate from the *Feature* section • Updated the *DAC Block Diagram* figure • Added the *Signal Description* section • Restructured the *Operation* section – Added the *DAC Output* section – The *DAC as Source For Internal Peripheral* section renamed as *Unbuffered Output as Source For Internal Peripherals* – The *DAC Output on Pin* section renamed as *Buffered Output*

© 2021 Microchip Technology Inc.
and its subsidiaries

chanhvinh.com

.....continued

Section	Changes
UPDI	• Renamed UPDICLKDIV to UPDICLKSEL • Updated the *UPDI Clock Domains* figure • Improved the *Clocks* section • Improved figures in the *UPDI Instruction Set* section • Updated Reset value for the STATUSA.UPDIREV bit field • Renamed the ASI_KEY_STATUS.CHIPERASE bit field to ASI_KEY_STATUS.CHER • Renamed the ASI_CTRLA.UPDICLKDIV bit field to ASI_CTRLA.UPDICLKSEL • Renamed the ASI_SYS_STATUS.UPDICLKDIV bit field to ASI_SYS_STATUS.UPDICLKSEL
Electrical characteristics	• Updated the *Electrical Characteristics* section • Added the *Characteristics Graphs* section

41.2 Rev. A - 07/2020

Section	Changes
Document	Initial document release

chanhvinh.com

The Microchip Website

Microchip provides online support via our website at www.microchip.com/. This website is used to make files and information easily available to customers. Some of the content available includes:

- **Product Support** – Data sheets and errata, application notes and sample programs, design resources, user's guides and hardware support documents, latest software releases and archived software
- **General Technical Support** – Frequently Asked Questions (FAQs), technical support requests, online discussion groups, Microchip design partner program member listing
- **Business of Microchip** – Product selector and ordering guides, latest Microchip press releases, listing of seminars and events, listings of Microchip sales offices, distributors and factory representatives

Product Change Notification Service

Microchip's product change notification service helps keep customers current on Microchip products. Subscribers will receive email notification whenever there are changes, updates, revisions or errata related to a specified product family or development tool of interest.

To register, go to www.microchip.com/pcn and follow the registration instructions.

Customer Support

Users of Microchip products can receive assistance through several channels:

- Distributor or Representative
- Local Sales Office
- Embedded Solutions Engineer (ESE)
- Technical Support

Customers should contact their distributor, representative or ESE for support. Local sales offices are also available to help customers. A listing of sales offices and locations is included in this document.

Technical support is available through the website at: www.microchip.com/support

© 2021 Microchip Technology Inc.
and its subsidiaries

chanhvinh.com

Product Identification System

To order or obtain information, e.g., on pricing or delivery, refer to the factory or the listed sales office.

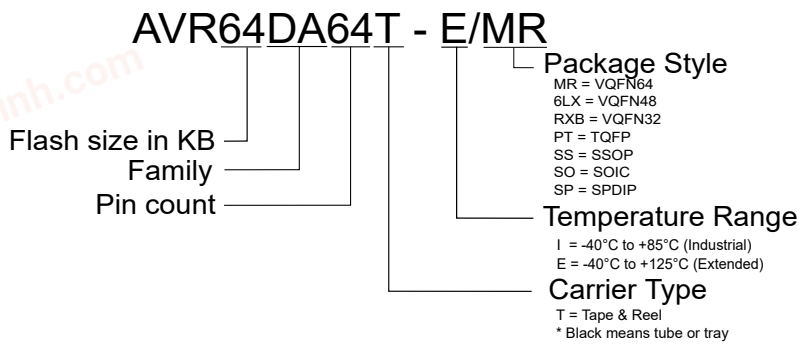

Note: The Tape and Reel identifier only appears in the catalog part number description. This identifier is used for ordering purposes and is not printed on the device package. Check with your Microchip Sales Office for package availability with the Tape and Reel option.

Microchip Devices Code Protection Feature

Note the following details of the code protection feature on Microchip devices:

- Microchip products meet the specifications contained in their particular Microchip Data Sheet.
- Microchip believes that its family of products is secure when used in the intended manner and under normal conditions.
- There are dishonest and possibly illegal methods being used in attempts to breach the code protection features of the Microchip devices. We believe that these methods require using the Microchip products in a manner outside the operating specifications contained in Microchip's Data Sheets. Attempts to breach these code protection features, most likely, cannot be accomplished without violating Microchip's intellectual property rights.
- Microchip is willing to work with any customer who is concerned about the integrity of its code.
- Neither Microchip nor any other semiconductor manufacturer can guarantee the security of its code. Code protection does not mean that we are guaranteeing the product is "unbreakable." Code protection is constantly evolving. We at Microchip are committed to continuously improving the code protection features of our products. Attempts to break Microchip's code protection feature may be a violation of the Digital Millennium Copyright Act. If such acts allow unauthorized access to your software or other copyrighted work, you may have a right to sue for relief under that Act.

Legal Notice

Information contained in this publication is provided for the sole purpose of designing with and using Microchip products. Information regarding device applications and the like is provided only for your convenience and may be superseded by updates. It is your responsibility to ensure that your application meets with your specifications.

THIS INFORMATION IS PROVIDED BY MICROCHIP "AS IS". MICROCHIP MAKES NO REPRESENTATIONS OR WARRANTIES OF ANY KIND WHETHER EXPRESS OR IMPLIED, WRITTEN OR ORAL, STATUTORY OR OTHERWISE, RELATED TO THE INFORMATION INCLUDING BUT NOT LIMITED TO ANY IMPLIED WARRANTIES OF NON-INFRINGEMENT, MERCHANTABILITY, AND FITNESS FOR A PARTICULAR PURPOSE OR WARRANTIES RELATED TO ITS CONDITION, QUALITY, OR PERFORMANCE.

IN NO EVENT WILL MICROCHIP BE LIABLE FOR ANY INDIRECT, SPECIAL, PUNITIVE, INCIDENTAL OR CONSEQUENTIAL LOSS, DAMAGE, COST OR EXPENSE OF ANY KIND WHATSOEVER RELATED TO THE INFORMATION OR ITS USE, HOWEVER CAUSED, EVEN IF MICROCHIP HAS BEEN ADVISED OF THE POSSIBILITY OR THE DAMAGES ARE FORESEEABLE. TO THE FULLEST EXTENT ALLOWED BY LAW, MICROCHIP'S TOTAL LIABILITY ON ALL CLAIMS IN ANY WAY RELATED TO THE INFORMATION OR ITS USE

© 2021 Microchip Technology Inc. and its subsidiaries

chanhvinh.com

WILL NOT EXCEED THE AMOUNT OF FEES, IF ANY, THAT YOU HAVE PAID DIRECTLY TO MICROCHIP FOR THE INFORMATION. Use of Microchip devices in life support and/or safety applications is entirely at the buyer's risk, and the buyer agrees to defend, indemnify and hold harmless Microchip from any and all damages, claims, suits, or expenses resulting from such use. No licenses are conveyed, implicitly or otherwise, under any Microchip intellectual property rights unless otherwise stated.

Trademarks

The Microchip name and logo, the Microchip logo, Adaptec, AnyRate, AVR, AVR logo, AVR Freaks, BesTime, BitCloud, chipKIT, chipKIT logo, CryptoMemory, CryptoRF, dsPIC, FlashFlex, flexPWR, HELDO, IGLOO, JukeBlox, KeeLoq, Kleer, LANCheck, LinkMD, maXStylus, maXTouch, MediaLB, megaAVR, Microsemi, Microsemi logo, MOST, MOST logo, MPLAB, OptoLyzer, PackeTime, PIC, picoPower, PICSTART, PIC32 logo, PolarFire, Prochip Designer, QTouch, SAM-BA, SenGenuity, SpyNIC, SST, SST Logo, SuperFlash, Symmetricom, SyncServer, Tachyon, TimeSource, tinyAVR, UNI/O, Vectron, and XMEGA are registered trademarks of Microchip Technology Incorporated in the U.S.A. and other countries.

AgileSwitch, APT, ClockWorks, The Embedded Control Solutions Company, EtherSynch, FlashTec, Hyper Speed Control, HyperLight Load, IntelliMOS, Libero, motorBench, mTouch, Powermite 3, Precision Edge, ProASIC, ProASIC Plus, ProASIC Plus logo, Quiet-Wire, SmartFusion, SyncWorld, Temux, TimeCesium, TimeHub, TimePictra, TimeProvider, WinPath, and ZL are registered trademarks of Microchip Technology Incorporated in the U.S.A.

Adjacent Key Suppression, AKS, Analog-for-the-Digital Age, Any Capacitor, AnyIn, AnyOut, Augmented Switching, BlueSky, BodyCom, CodeGuard, CryptoAuthentication, CryptoAutomotive, CryptoCompanion, CryptoController, dsPICDEM, dsPICDEM.net, Dynamic Average Matching, DAM, ECAN, Espresso T1S, EtherGREEN, IdealBridge, In-Circuit Serial Programming, ICSP, INICnet, Intelligent Paralleling, Inter-Chip Connectivity, JitterBlocker, maxCrypto, maxView, memBrain, Mindi, MiWi, MPASM, MPF, MPLAB Certified logo, MPLIB, MPLINK, MultiTRAK, NetDetach, Omniscient Code Generation, PICDEM, PICDEM.net, PICkit, PICtail, PowerSmart, PureSilicon, QMatrix, REAL ICE, Ripple Blocker, RTAX, RTG4, SAM-ICE, Serial Quad I/O, simpleMAP, SimpliPHY, SmartBuffer, SMART-I.S., storClad, SQI, SuperSwitcher, SuperSwitcher II, Switchtec, SynchroPHY, Total Endurance, TSHARC, USBCheck, VariSense, VectorBlox, VeriPHY, ViewSpan, WiperLock, XpressConnect, and ZENA are trademarks of Microchip Technology Incorporated in the U.S.A. and other countries.

SQTP is a service mark of Microchip Technology Incorporated in the U.S.A.

The Adaptec logo, Frequency on Demand, Silicon Storage Technology, and Symmcom are registered trademarks of Microchip Technology Inc. in other countries.

GestIC is a registered trademark of Microchip Technology Germany II GmbH & Co. KG, a subsidiary of Microchip Technology Inc., in other countries.

All other trademarks mentioned herein are property of their respective companies.

© 2021, Microchip Technology Incorporated, Printed in the U.S.A., All Rights Reserved.

ISBN: 978-1-5224-8366-3

Quality Management System

For information regarding Microchip's Quality Management Systems, please visit www.microchip.com/quality.

chanhvinh.com

Worldwide Sales and Service

AMERICAS	ASIA/PACIFIC	ASIA/PACIFIC	EUROPE
Corporate Office 2355 West Chandler Blvd. Chandler, AZ 85224-6199 Tel: 480-792-7200 Fax: 480-792-7277 Technical Support: www.microchip.com/support Web Address: www.microchip.com **Atlanta** Duluth, GA Tel: 678-957-9614 Fax: 678-957-1455 **Austin, TX** Tel: 512-257-3370 **Boston** Westborough, MA Tel: 774-760-0087 Fax: 774-760-0088 **Chicago** Itasca, IL Tel: 630-285-0071 Fax: 630-285-0075 **Dallas** Addison, TX Tel: 972-818-7423 Fax: 972-818-2924 **Detroit** Novi, MI Tel: 248-848-4000 **Houston, TX** Tel: 281-894-5983 **Indianapolis** Noblesville, IN Tel: 317-773-8323 Fax: 317-773-5453 Tel: 317-536-2380 **Los Angeles** Mission Viejo, CA Tel: 949-462-9523 Fax: 949-462-9608 Tel: 951-273-7800 **Raleigh, NC** Tel: 919-844-7510 **New York, NY** Tel: 631-435-6000 **San Jose, CA** Tel: 408-735-9110 Tel: 408-436-4270 **Canada - Toronto** Tel: 905-695-1980 Fax: 905-695-2078	**Australia - Sydney** Tel: 61-2-9868-6733 **China - Beijing** Tel: 86-10-8569-7000 **China - Chengdu** Tel: 86-28-8665-5511 **China - Chongqing** Tel: 86-23-8980-9588 **China - Dongguan** Tel: 86-769-8702-9880 **China - Guangzhou** Tel: 86-20-8755-8029 **China - Hangzhou** Tel: 86-571-8792-8115 **China - Hong Kong SAR** Tel: 852-2943-5100 **China - Nanjing** Tel: 86-25-8473-2460 **China - Qingdao** Tel: 86-532-8502-7355 **China - Shanghai** Tel: 86-21-3326-8000 **China - Shenyang** Tel: 86-24-2334-2829 **China - Shenzhen** Tel: 86-755-8864-2200 **China - Suzhou** Tel: 86-186-6233-1526 **China - Wuhan** Tel: 86-27-5980-5300 **China - Xian** Tel: 86-29-8833-7252 **China - Xiamen** Tel: 86-592-2388138 **China - Zhuhai** Tel: 86-756-3210040	**India - Bangalore** Tel: 91-80-3090-4444 **India - New Delhi** Tel: 91-11-4160-8631 **India - Pune** Tel: 91-20-4121-0141 **Japan - Osaka** Tel: 81-6-6152-7160 **Japan - Tokyo** Tel: 81-3-6880- 3770 **Korea - Daegu** Tel: 82-53-744-4301 **Korea - Seoul** Tel: 82-2-554-7200 **Malaysia - Kuala Lumpur** Tel: 60-3-7651-7906 **Malaysia - Penang** Tel: 60-4-227-8870 **Philippines - Manila** Tel: 63-2-634-9065 **Singapore** Tel: 65-6334-8870 **Taiwan - Hsin Chu** Tel: 886-3-577-8366 **Taiwan - Kaohsiung** Tel: 886-7-213-7830 **Taiwan - Taipei** Tel: 886-2-2508-8600 **Thailand - Bangkok** Tel: 66-2-694-1351 **Vietnam - Ho Chi Minh** Tel: 84-28-5448-2100	**Austria - Wels** Tel: 43-7242-2244-39 Fax: 43-7242-2244-393 **Denmark - Copenhagen** Tel: 45-4485-5910 Fax: 45-4485-2829 **Finland - Espoo** Tel: 358-9-4520-820 **France - Paris** Tel: 33-1-69-53-63-20 Fax: 33-1-69-30-90-79 **Germany - Garching** Tel: 49-8931-9700 **Germany - Haan** Tel: 49-2129-3766400 **Germany - Heilbronn** Tel: 49-7131-72400 **Germany - Karlsruhe** Tel: 49-721-625370 **Germany - Munich** Tel: 49-89-627-144-0 Fax: 49-89-627-144-44 **Germany - Rosenheim** Tel: 49-8031-354-560 **Israel - Ra'anana** Tel: 972-9-744-7705 **Italy - Milan** Tel: 39-0331-742611 Fax: 39-0331-466781 **Italy - Padova** Tel: 39-049-7625286 **Netherlands - Drunen** Tel: 31-416-690399 Fax: 31-416-690340 **Norway - Trondheim** Tel: 47-72884388 **Poland - Warsaw** Tel: 48-22-3325737 **Romania - Bucharest** Tel: 40-21-407-87-50 **Spain - Madrid** Tel: 34-91-708-08-90 Fax: 34-91-708-08-91 **Sweden - Gothenberg** Tel: 46-31-704-60-40 **Sweden - Stockholm** Tel: 46-8-5090-4654 **UK - Wokingham** Tel: 44-118-921-5800 Fax: 44-118-921-5820

© 2021 Microchip Technology Inc.
and its subsidiaries