chanhvinh.com

24C01C

1K 5.0V I²C™ Serial EEPROM

Features:

- Single Supply with Operation from 4.5V to 5.5V
- Low-Power CMOS Technology:
  - Read current 1 mA, max.
  - Standby current 5 μA, max.
- 2-Wire Serial Interface, I²C™ Compatible
- Cascadable up to Eight Devices
- Schmitt Trigger Inputs for Noise Suppression
- Output Slope Control to Eliminate Ground Bounce
- 100 kHz and 400 kHz Clock Compatibility
- Page Write Time 1 ms max.
- Self-Timed Erase/Write Cycle
- 16-Byte Page Write Buffer
- ESD Protection >4000V
- More than 1 Million Erase/Write Cycles
- Data Retention >200 Years
- Factory Programming Available
- Packages include 8-lead PDIP, SOIC, TSSOP, DFN, TDFN, MSOP and 6-lead SOT-23
- Pb-Free and RoHS Compliant
- Temperature Ranges:
  - Industrial (I): -40°C to +85°C
  - Automotive (E): -40°C to +125°C

Description:

The Microchip Technology Inc. 24C01C is a 1K bit Serial Electrically Erasable PROM with a voltage range of 4.5V to 5.5V. The device is organized as a single block of 128 x 8-bit memory with a 2-wire serial interface. Low-current design permits operation with max. standby and active currents of only 5 μA and 1 mA, respectively. The device has a page write capability for up to 16 bytes of data and has fast write cycle times of only 1 ms for both byte and page writes. Functional address lines allow the connection of up to eight 24C01C devices on the same bus for up to 8K bits of contiguous EEPROM memory. The device is available in the standard 8-pin PDIP, 8-pin SOIC (3.90 mm), 8-pin 2x3 DFN and TDFN, 8-pin MSOP and TSSOP packages. The 24C01C is also available in the 6-lead SOT-23 package.

Block Diagram

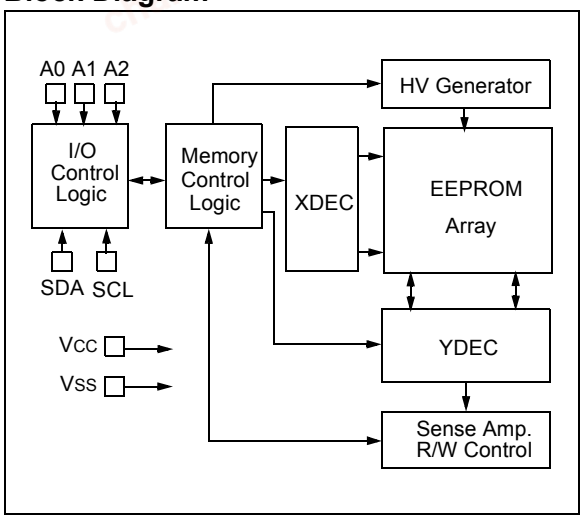

Package Types

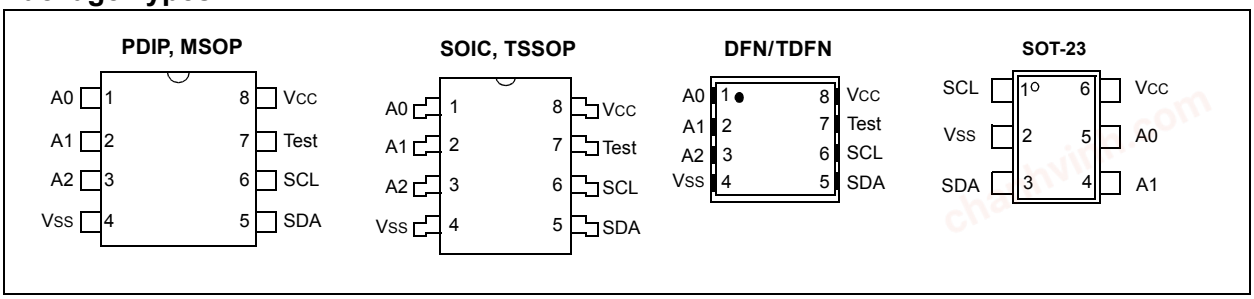

© 1997-2012 Microchip Technology Inc.

chanhvinh.com

1.0 ELECTRICAL CHARACTERISTICS

Absolute Maximum Ratings(†)

VCC.....7.0V

All inputs and outputs w.r.t. VSS ..... -0.6V to VCC +1.0V

Storage temperature .....-65°C to +150°C

Ambient temperature with power applied .....-40°C to +125°C

ESD protection on all pins .....≥ 4 kV

† NOTICE: Stresses above those listed under “Absolute Maximum Ratings” may cause permanent damage to the device. This is a stress rating only and functional operation of the device at these or any other conditions above those indicated in the operational listings of this specification is not implied. Exposure to Absolute Maximum Rating conditions for extended periods may affect device reliability.

TABLE 1-1: DC CHARACTERISTICS

DC CHARACTERISTICS			**Electrical Characteristics:** Industrial (I): VCC = +4.5V to 5.5V TA = -40°C to +85°C Automotive (E): VCC = +4.5V to 5.5V TA = -40°C to +125°C			
Param. No.	**Sym.**	**Characteristic**	**Min.**	**Max.**	**Units**	**Conditions**
D1	—	A0, A1, A2, SCL, SDA and WP pins:	—	—	—	—
D2	VIH	High-level input voltage	0.7 VCC	—	V	—
D3	VIL	Low-level input voltage	—	0.3 VCC	V	—
D4	VHYS	Hysteresis of Schmitt Trigger inputs (SDA, SCL pins)	0.05 VCC	—	V	(**Note**)
D5	VOL	Low-level output voltage	—	0.40	V	IOL = 3.0 mA @ VCC = 4.5V
D6	ILI	Input leakage current	—	±1	µA	VIN = VSS or VCC, WP = VSS
D7	ILO	Output leakage current	—	±1	µA	VOUT = VSS or VCC
D8	CIN, COUT	Pin capacitance (all inputs/outputs)	—	10	pF	VCC = 5.0V (**Note**) TA = 25°C, f = 1 MHz
D9	ICC Read	Operating current	—	1	mA	VCC = 5.5V, SCL = 400 kHz
	ICC Write		—	3	mA	VCC = 5.5V
D10	ICCS	Standby current	—	5	µA	VCC = 5.5V, SDA = SCL = VCC WP = VSS

Note: This parameter is periodically sampled and not 100% tested.

© 1997-2012 Microchip Technology Inc.

chanhvinh.com

TABLE 1-2: AC CHARACTERISTICS

AC CHARACTERISTICS			Electrical Characteristics: Industrial (I): VCC = +4.5V to 5.5V TA = -40°C to +85°C Automotive (E): VCC = +4.5V to 5.5V TA = -40°C to +125°C			
Param. No.	**Sym.**	**Characteristic**	**Min.**	**Max.**	**Units**	**Conditions**
1	FCLK	Clock frequency	— —	100 400	kHz	— (I-temp)
2	THIGH	Clock high time	4000 600	— —	ns	— (I-temp)
3	TLOW	Clock low time	4700 1300	— —	ns	— (I-temp)
4	TR	SDA and SCL rise time (**Note 1**)	— —	1000 300	ns	— (I-temp)
5	TF	SDA and SCL fall time (**Note 1**)	—	300	ns	—
6	THD:STA	Start condition hold time	4000 600	— —	ns	— (I-temp)
7	TSU:STA	Start condition setup time	4700 600	— —	ns	— (I-temp)
8	THD:DAT	Data input hold time	0	—	ns	(**Note 2**)
9	TSU:DAT	Data input setup time	250 100	— —	ns	— (I-temp)
10	TSU:STO	Stop condition setup time	4000 600	— —	ns	— (I-temp)
11	TAA	Output valid from clock (**Note 2**)	— —	3500 900	ns	— (I-temp)
12	TBUF	Bus free time: Time the bus must be free before a new transmission can start	4700 1300	— —	ns	— (I-temp)
13	TOF	Output fall time from VIH minimum to VIL maximum CB ≤ 100 pF	10 + 0.1CB	250	ns	(**Note 1**)
14	TSP	Input filter spike suppression (SDA and SCL pins)	—	50	ns	(**Note 3**)
15	TWC	Write cycle time (byte or page)	—	1.5 1	ms	— (I-temp)
16	—	Endurance	1,000,000	—	cycles	25°C (**Note 4**)

Note 1: Not 100% tested. CB = total capacitance of one bus line in pF.

2: As a transmitter, the device must provide an internal minimum delay time to bridge the undefined region (minimum 300 ns) of the falling edge of SCL to avoid unintended generation of Start or Stop conditions.

3: The combined TSP and VHYS specifications are due to new Schmitt Trigger inputs, which provide improved noise spike suppression. This eliminates the need for a TI specification for standard operation.

4: This parameter is not tested but ensured by characterization. For endurance estimates in a specific application, please consult the Total Endurance™ Model, which can be obtained from Microchip's web site at www.microchip.com.

© 1997-2012 Microchip Technology Inc.

chanhvinh.com

FIGURE 1-1: BUS TIMING DATA

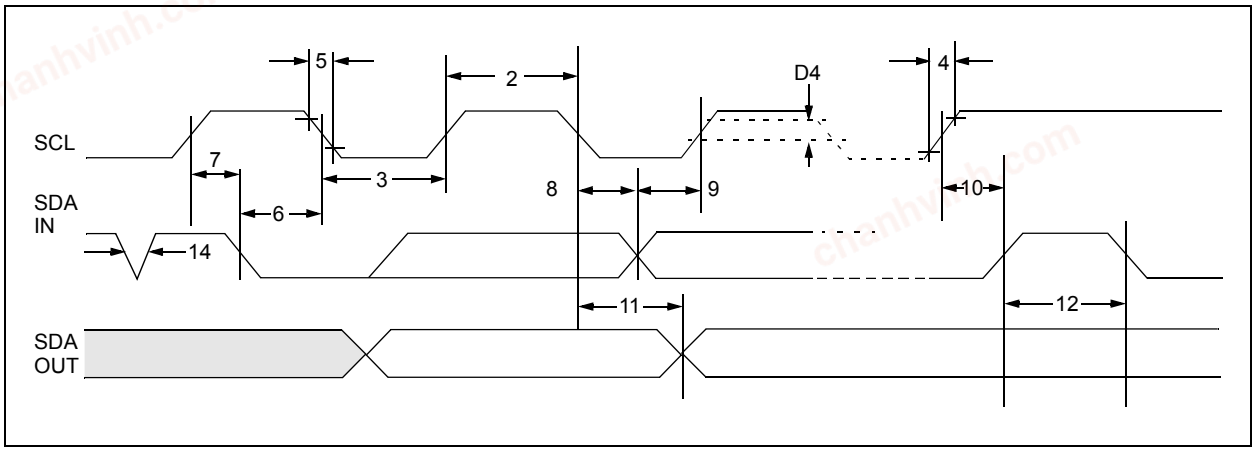

© 1997-2012 Microchip Technology Inc.

chanhvinh.com

2.0 PIN DESCRIPTIONS

The descriptions of the pins are listed in Table 2-1.

TABLE 2-1: PIN FUNCTION TABLE

Name	8-pin PDIP	8-pin SOIC	8-pin TSSOP	8-pin MSOP	8-pin DFN/TDFN	SOT-23	Function
A0	1	1	1	1	1	5	Chip Select
A1	2	2	2	2	2	4	Chip Select
A2	3	3	3	3	3	—	Chip Select
VSS	4	4	4	4	4	2	Ground
SDA	5	5	5	5	5	3	Serial Data
SCL	6	6	6	6	6	1	Serial Clock
Test	7	7	7	7	7	—	Test
VCC	8	8	8	8	8	6	+4.5V to 5.5V Power Supply

2.1 SDA Serial Data

This is a bidirectional pin used to transfer addresses and data into and data out of the device. It is an open drain terminal; therefore, the SDA bus requires a pull-up resistor to VCC (typical 10 kΩ for 100 kHz, 2 kΩ for 400 kHz).

For normal data transfer SDA is allowed to change only during SCL low. Changes during SCL high are reserved for indicating the Start and Stop conditions.

2.2 SCL Serial Clock

This input is used to synchronize the data transfer from and to the device.

2.3 A0, A1, A2

The levels on these inputs are compared with the corresponding bits in the slave address. The chip is selected if the compare is true.

Up to eight 24C01C devices may be connected to the same bus by using different Chip Select bit combinations. These inputs must be connected to either VCC or VSS.

For the SOT-23 devices up to four devices may be connected to the same bus using different Chip Select bit combinations.

In most applications, the chip address inputs A0, A1 and A2 are hard-wired to logic '0' or logic '1'. For applications in which these pins are controlled by a microcontroller or other programmable device, the chip address pins must be driven to logic '0' or logic '1' before normal device operation can proceed.

2.4 Test

This pin is utilized for testing purposes only. It may be tied high, tied low or left floating.

2.5 Noise Protection

The 24C01C employs a VCC threshold detector circuit which disables the internal erase/write logic if the VCC is below 3.8 volts at nominal conditions.

The SCL and SDA inputs have Schmitt Trigger and filter circuits which suppress noise spikes to assure proper device operation even on a noisy bus.

© 1997-2012 Microchip Technology Inc.

chanhvinh.com

3.0 FUNCTIONAL DESCRIPTION

The 24C01C supports a bidirectional 2-wire bus and data transmission protocol. A device that sends data onto the bus is defined as transmitter, and a device receiving data as receiver. The bus has to be controlled by a master device that generates the Serial Clock (SCL), controls the bus access, and generates the Start and Stop conditions, while the 24C01C works as slave. Both master and slave can operate as transmitter or receiver, but the master device determines which mode is activated.

4.0 BUS CHARACTERISTICS

The following **bus protocol** has been defined:

- Data transfer may be initiated only when the bus is not busy.
- During data transfer, the data line must remain stable whenever the clock line is high. Changes in the data line while the clock line is high will be interpreted as a Start or Stop condition.

Accordingly, the following bus conditions have been defined (Figure 4-1).

4.1 Bus Not Busy (A)

Both data and clock lines remain high.

4.2 Start Data Transfer (B)

A high-to-low transition of the SDA line while the clock (SCL) is high determines a Start condition. All commands must be preceded by a Start condition.

4.3 Stop Data Transfer (C)

A low-to-high transition of the SDA line while the clock (SCL) is high determines a Stop condition. All operations must be ended with a Stop condition.

4.4 Data Valid (D)

The state of the data line represents valid data when, after a Start condition, the data line is stable for the duration of the high period of the clock signal.

The data on the line must be changed during the low period of the clock signal. There is one bit of data per clock pulse.

Each data transfer is initiated with a Start condition and terminated with a Stop condition. The number of the data bytes transferred between the Start and Stop conditions is determined by the master device and is theoretically unlimited, although only the last sixteen will be stored when doing a write operation. When an overwrite does occur it will replace data in a first-in first-out fashion.

4.5 Acknowledge

Each receiving device, when addressed, is required to generate an acknowledge after the reception of each byte. The master device must generate an extra clock pulse, which is associated with this Acknowledge bit.

Note:	The 24C01C does not generate any Acknowledge bits if an internal programming cycle is in progress.

The device that acknowledges has to pull down the SDA line during the Acknowledge clock pulse in such a way that the SDA line is stable low during the high period of the acknowledge related clock pulse. Of course, setup and hold times must be taken into account. A master must signal an end of data to the slave by not generating an Acknowledge bit on the last byte that has been clocked out of the slave. In this case, the slave must leave the data line high to enable the master to generate the Stop condition (Figure 4-2)

© 1997-2012 Microchip Technology Inc.

chanhvinh.com

FIGURE 4-1: DATA TRANSFER SEQUENCE ON THE SERIAL BUS

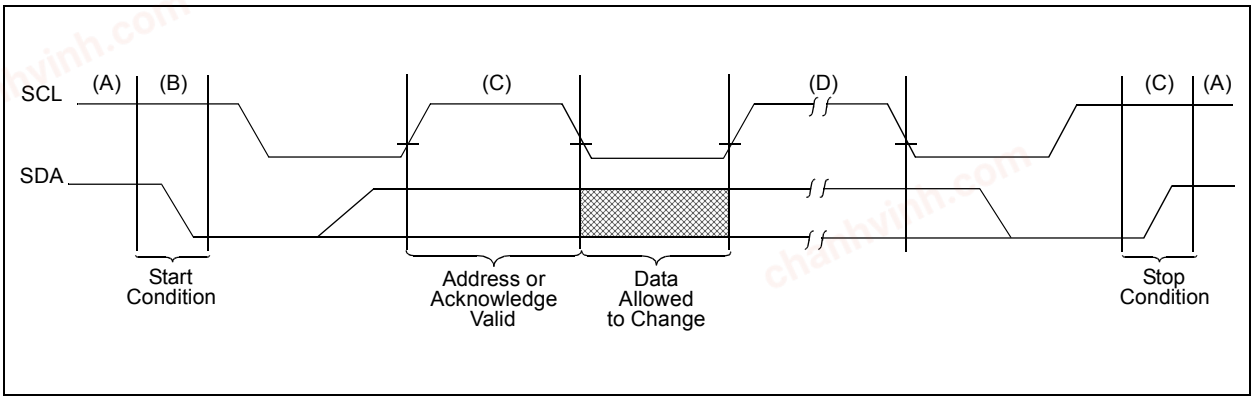

FIGURE 4-2: ACKNOWLEDGE TIMING

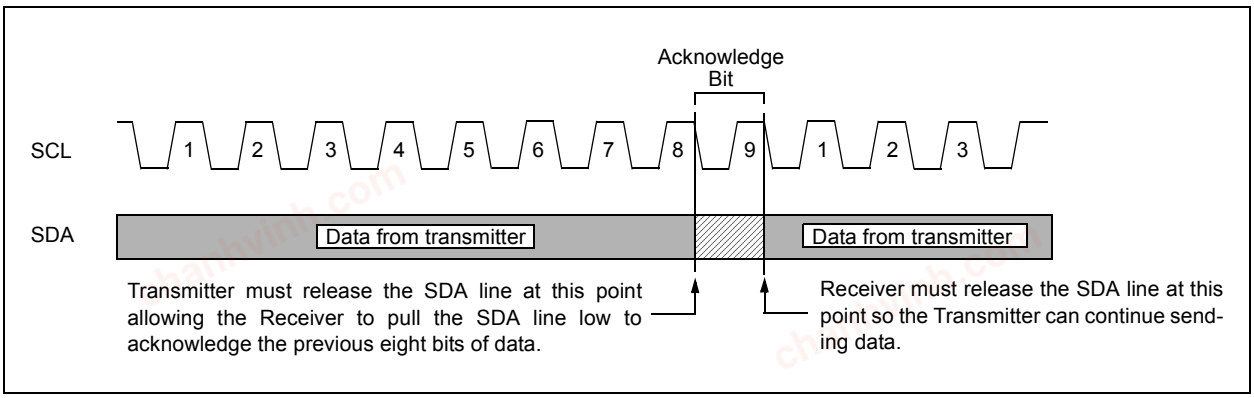

chanhvinh.com

5.0 DEVICE ADDRESSING

A control byte is the first byte received following the Start condition from the master device (Figure 5-1). The control byte consists of a four-bit control code; for the 24C01C this is set as '1010' binary for read and write operations. The next three bits of the control byte are the Chip Select bits (A2, A1, A0). The Chip Select bits allow the use of up to eight 24C01C devices on the same bus and are used to select which device is accessed. The Chip Select bits in the control byte must correspond to the logic levels on the corresponding A2, A1 and A0 pins for the device to respond. These bits are in effect the three Most Significant bits of the word address.

For the SOT-23 package, the A2 address pin is not available. During device addressing, the A2 Chip Select bit should be set to '0'.

The last bit of the control byte defines the operation to be performed. When set to a '1' a read operation is selected, and when set to a '0' a write operation is selected. Following the Start condition, the 24C01C monitors the SDA bus checking the control byte being transmitted. Upon receiving a '1010' code and appropriate Chip Select bits, the slave device outputs an Acknowledge signal on the SDA line. Depending on the state of the R/$\overline{W}$ bit, the 24C01C will select a read or write operation.

FIGURE 5-1: CONTROL BYTE FORMAT

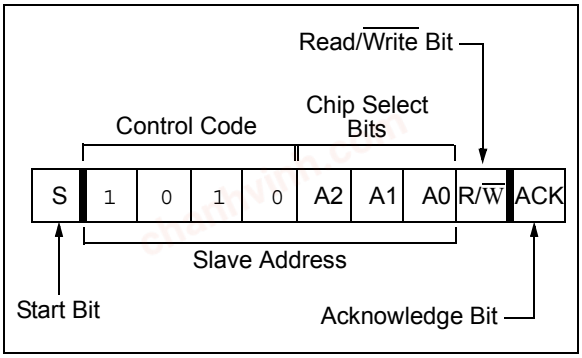

5.1 Contiguous Addressing Across Multiple Devices

The Chip Select bits A2, A1, A0 can be used to expand the contiguous address space for up to 8K bits by adding up to eight 24C01C devices on the same bus. In this case, software can use A0 of the control byte as address bit A8, A1 as address bit A9, and A2 as address bit A10. It is not possible to sequentially read across device boundaries.

For the SOT-23 package, up to four 24C01C devices can be added for up to 4K bits of address space. In this case, software can use A0 of the control byte as address bit A8, and A1 as address bit A9. It is not possible to sequentially read across device boundaries.

© 1997-2012 Microchip Technology Inc.

chanhvinh.com

6.0 WRITE OPERATIONS

6.1 Byte Write

Following the Start signal from the master, the device code (4 bits), the Chip Select bits (3 bits), and the R/$\overline{W}$ bit, which is a logic low, is placed onto the bus by the master transmitter. The device will acknowledge this control byte during the ninth clock pulse. The next byte transmitted by the master is the word address and will be written into the Address Pointer of the 24C01C. After receiving another Acknowledge signal from the 24C01C the master device will transmit the data word to be written into the addressed memory location. The 24C01C acknowledges again and the master generates a Stop condition. This initiates the internal write cycle, and during this time the 24C01C will not generate Acknowledge signals (Figure 6-1).

6.2 Page Write

The write control byte, word address and the first data byte are transmitted to the 24C01C in the same way as in a byte write. But instead of generating a Stop condition, the master transmits up to 15 additional data bytes to the 24C01C which are temporarily stored in the on-chip page buffer and will be written into the memory after the master has transmitted a Stop condition.

After the receipt of each word, the four lower order Address Pointer bits are internally incremented by one. The higher order four bits of the word address remains constant. If the master should transmit more than 16 bytes prior to generating the Stop condition, the address counter will roll over and the previously received data will be overwritten. As with the byte write operation, once the Stop condition is received an internal write cycle will begin (Figure 6-2).

Note:	Page write operations are limited to writing bytes within a single physical page, **regardless** of the number of bytes actually being written. Physical page boundaries start at addresses that are integer multiples of the page buffer size (or 'page size') and end at addresses that are integer multiples of [page size – 1]. If a Page Write command attempts to write across a physical page boundary, the result is that the data wraps around to the beginning of the current page (overwriting data previously stored there), instead of being written to the next page as might be expected. It is therefore necessary for the application software to prevent page write operations that would attempt to cross a page boundary.

FIGURE 6-1: BYTE WRITE

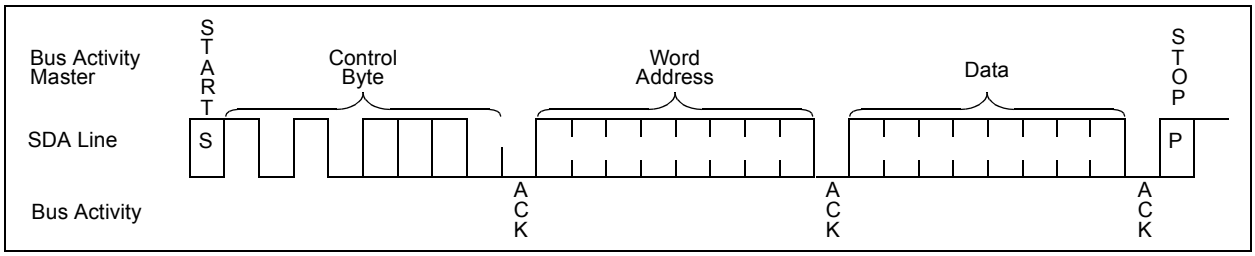

FIGURE 6-2: PAGE WRITE

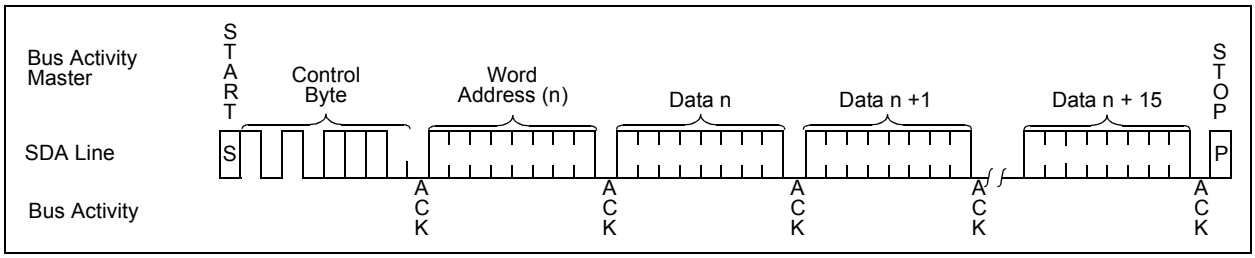

chanhvinh.com

7.0 ACKNOWLEDGE POLLING

Since the device will not acknowledge during a write cycle, this can be used to determine when the cycle is complete (this feature can be used to maximize bus throughput). Once the Stop condition for a Write command has been issued from the master, the device initiates the internally timed write cycle. ACK polling can be initiated immediately. This involves the master sending a Start condition followed by the control byte for a Write command (R/$\overline{W}$ = 0). If the device is still busy with the write cycle, then no ACK will be returned. If no ACK is returned, then the Start bit and control byte must be re-sent. If the cycle is complete, then the device will return the ACK and the master can then proceed with the next Read or Write command. See Figure 7-1 for flow diagram.

FIGURE 7-1: ACKNOWLEDGE POLLING FLOW

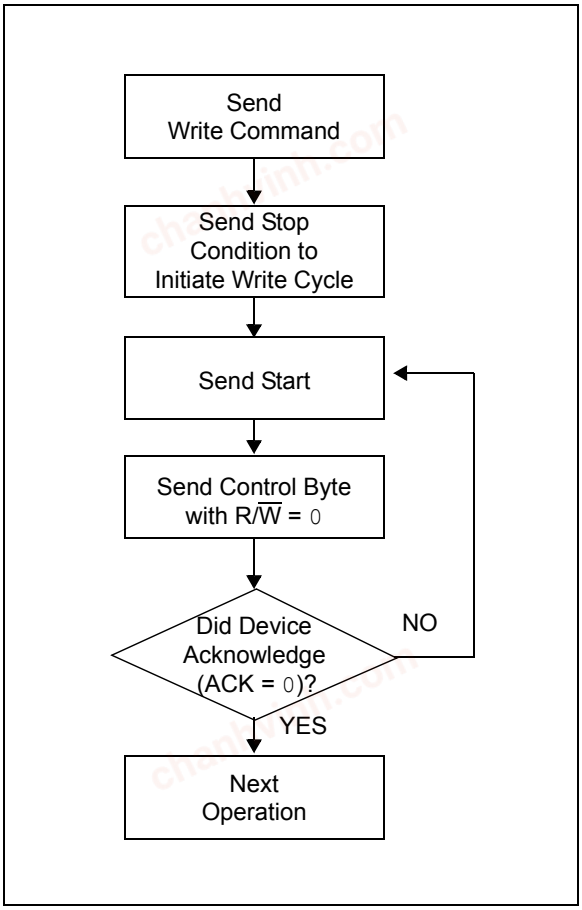

© 1997-2012 Microchip Technology Inc.

chanhvinh.com

8.0 READ OPERATION

Read operations are initiated in the same way as write operations with the exception that the R/$\overline{W}$ bit of the slave address is set to one. There are three basic types of read operations: current address read, random read and sequential read.

8.1 Current Address Read

The 24C01C contains an address counter that maintains the address of the last word accessed, internally incremented by one. Therefore, if the previous read access was to address n, the next current address read operation would access data from address n + 1. Upon receipt of the slave address with the R/$\overline{W}$ bit set to one, the 24C01C issues an acknowledge and transmits the eight-bit data word. The master will not acknowledge the transfer, but does generate a Stop condition and the 24C01C discontinues transmission (Figure 8-1).

FIGURE 8-1: CURRENT ADDRESS READ

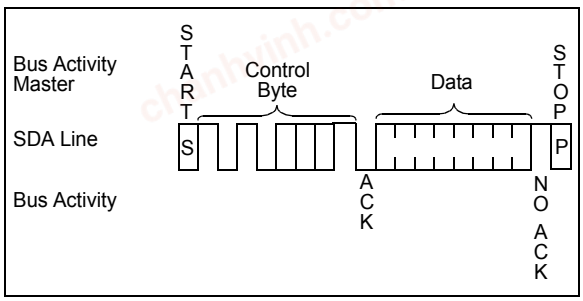

8.2 Random Read

Random read operations allow the master to access any memory location in a random manner. To perform this type of read operation, first the word address must be set. This is done by sending the word address to the 24C01C as part of a write operation.

After the word address is sent, the master generates a Start condition following the acknowledge. This terminates the write operation, but not before the internal Address Pointer is set. Then the master issues the control byte again but with the R/$\overline{W}$ bit set to a one. The 24C01C will then issue an acknowledge and transmits the eight bit data word. The master will not acknowledge the transfer, but does generate a Stop condition and the 24C01C discontinues transmission (Figure 8-2). After this command, the internal address counter will point to the address location following the one that was just read.

8.3 Sequential Read

Sequential reads are initiated in the same way as a random read except that after the 24C01C transmits the first data byte, the master issues an acknowledge as opposed to a Stop condition in a random read. This directs the 24C01C to transmit the next sequentially addressed 8-bit word (Figure 8-3).

To provide sequential reads the 24C01C contains an internal Address Pointer which is incremented by one at the completion of each operation. This Address Pointer allows the entire memory contents to be serially read during one operation. The internal Address Pointer will automatically roll over from address 7F to address 00.

FIGURE 8-2: RANDOM READ

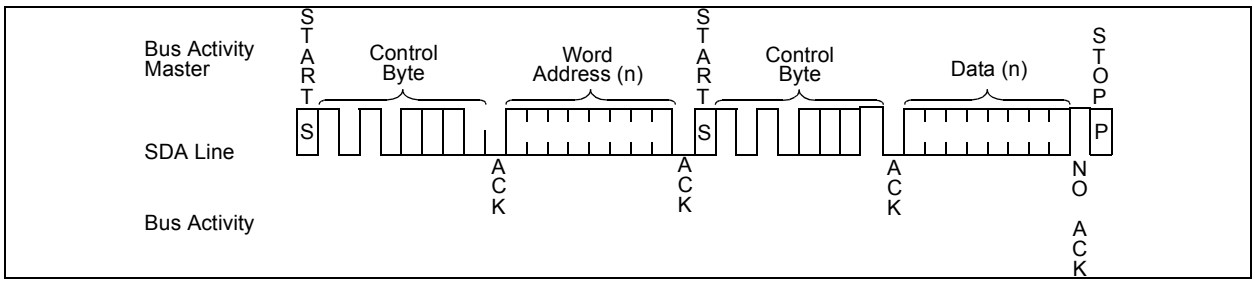

FIGURE 8-3: SEQUENTIAL READ

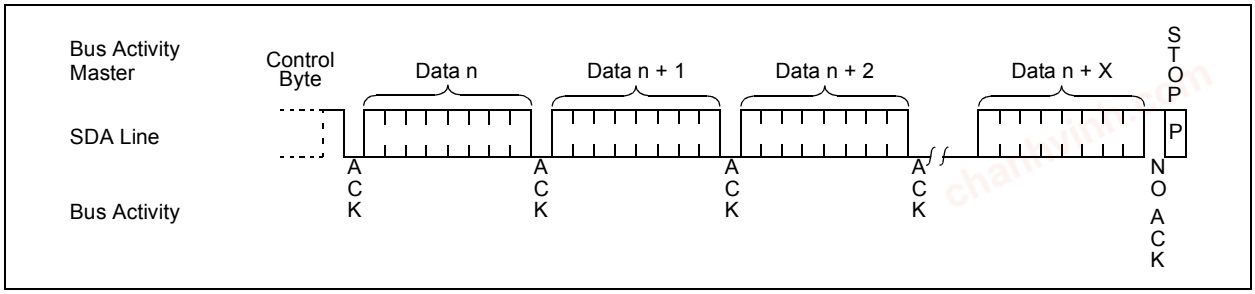

chanhvinh.com

9.0 PACKAGING INFORMATION

9.1 Package Marking Information

8-Lead PDIP (300 mil)

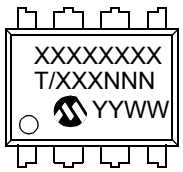

Example:

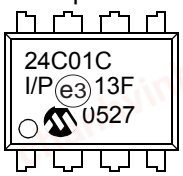

8-Lead SOIC (3.90 mm)

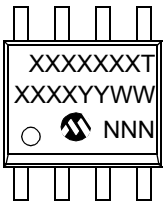

Example:

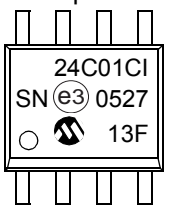

8-Lead TSSOP

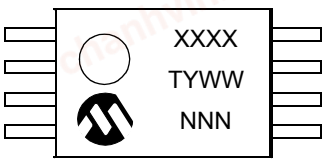

Example:

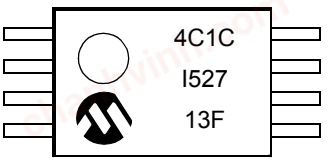

8-Lead MSOP

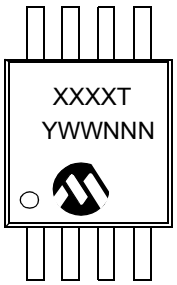

Example:

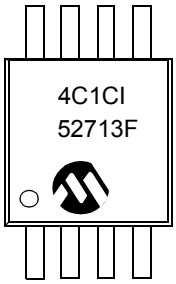

8-Lead 2x3 DFN

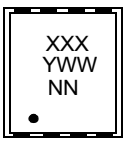

Example:

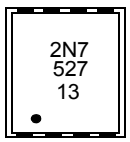

8-Lead 2x3 TDFN



Example:



© 1997-2012 Microchip Technology Inc.

chanhvinh.com

Part Number	1st Line Marking Codes							
	TSSOP	MSOP	DFN		TDFN		SOT-23	
			I Temp.	E Temp.	I Temp.	E Temp.	I Temp.	E Temp.
24C01C	4C1C	4C1CT	2N7	2N8	AN7	AN8	HANN	HBNN

Note: T = Temperature grade (I, E)

6-Lead SOT-23

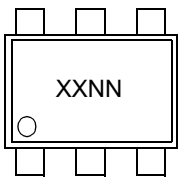

Example:

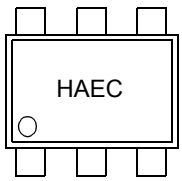

Legend:	XX...X	Part number or part number code
	T	Temperature (I, E)
	Y	Year code (last digit of calendar year)
	YY	Year code (last 2 digits of calendar year)
	WW	Week code (week of January 1 is week ‘01’)
	NNN	Alphanumeric traceability code (2 characters for small packages)
	(e3)	Pb-free JEDEC designator for Matte Tin (Sn)

Note: For very small packages with no room for the Pb-free JEDEC designator (e3), the marking will only appear on the outer carton or reel label.

Note: In the event the full Microchip part number cannot be marked on one line, it will be carried over to the next line, thus limiting the number of available characters for customer-specific information.

Note: Please visit www.microchip.com/Pbfree for the latest information on Pb-free conversion.

*Standard OTP marking consists of Microchip part number, year code, week code, and traceability code.

chanhvinh.com

8-Lead Plastic Dual In-Line (P) – 300 mil Body [PDIP]

Note: For the most current package drawings, please see the Microchip Packaging Specification located at http://www.microchip.com/packaging

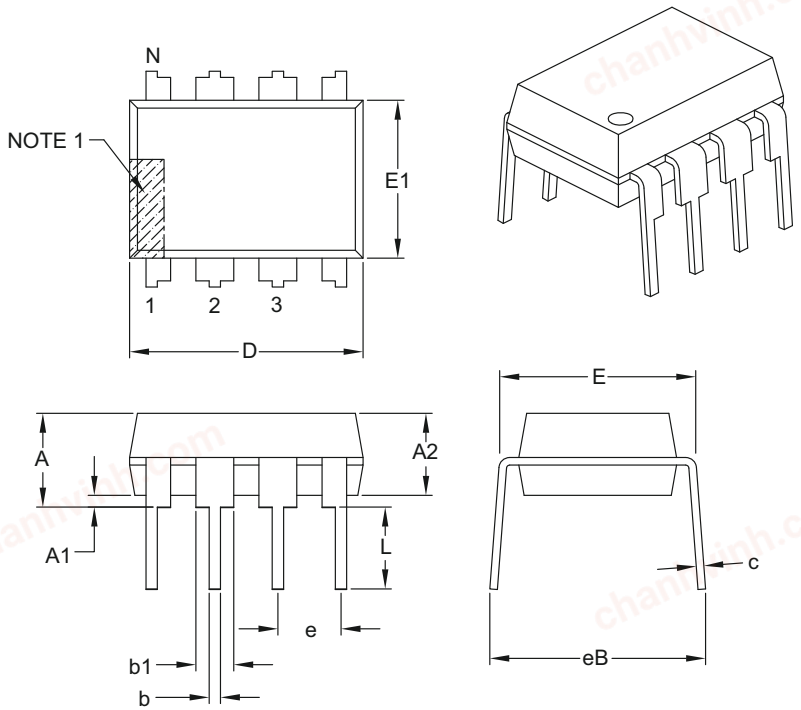

Units		INCHES		
Dimension Limits		MIN	NOM	MAX
Number of Pins	N		8	
Pitch	e		.100 BSC	
Top to Seating Plane	A	–	–	.210
Molded Package Thickness	A2	.115	.130	.195
Base to Seating Plane	A1	.015	–	–
Shoulder to Shoulder Width	E	.290	.310	.325
Molded Package Width	E1	.240	.250	.280
Overall Length	D	.348	.365	.400
Tip to Seating Plane	L	.115	.130	.150
Lead Thickness	c	.008	.010	.015
Upper Lead Width	b1	.040	.060	.070
Lower Lead Width	b	.014	.018	.022
Overall Row Spacing §	eB	–	–	.430

Notes:

1. Pin 1 visual index feature may vary, but must be located with the hatched area.
2. § Significant Characteristic.
3. Dimensions D and E1 do not include mold flash or protrusions. Mold flash or protrusions shall not exceed .010" per side.
4. Dimensioning and tolerancing per ASME Y14.5M.

   BSC: Basic Dimension. Theoretically exact value shown without tolerances.

Microchip Technology Drawing C04-018B

© 1997-2012 Microchip Technology Inc.

chanhvinh.com

8-Lead Plastic Small Outline (SN) - Narrow, 3.90 mm Body [SOIC]

Note: For the most current package drawings, please see the Microchip Packaging Specification located at http://www.microchip.com/packaging

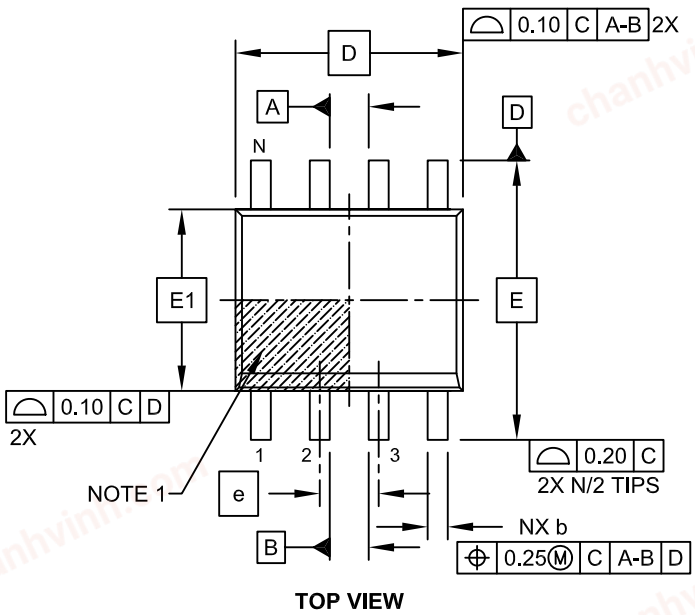

TOP VIEW

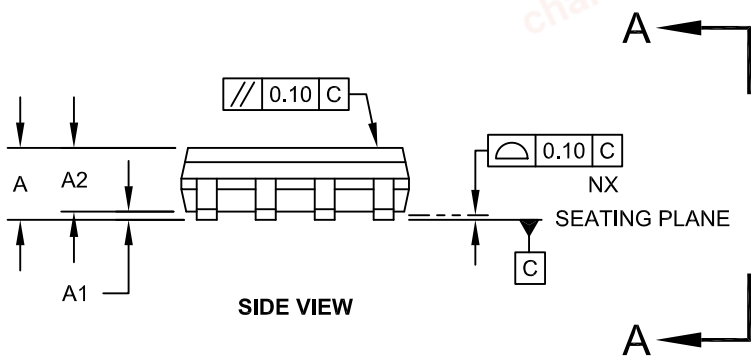

SIDE VIEW

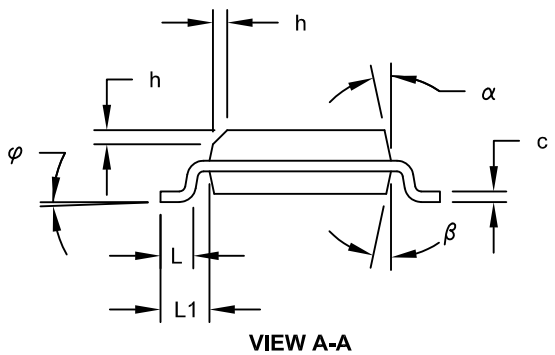

VIEW A-A

Microchip Technology Drawing No. C04-057C Sheet 1 of 2

chanhvinh.com

8-Lead Plastic Small Outline (SN) - Narrow, 3.90 mm Body [SOIC]

Note: For the most current package drawings, please see the Microchip Packaging Specification located at http://www.microchip.com/packaging

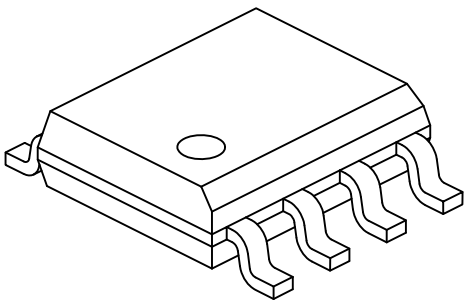

Units		MILLIMETERS		
Dimension Limits		MIN	NOM	MAX
Number of Pins	N		8	
Pitch	e		1.27 BSC	
Overall Height	A	-	-	1.75
Molded Package Thickness	A2	1.25	-	-
Standoff §	A1	0.10	-	0.25
Overall Width	E		6.00 BSC	
Molded Package Width	E1		3.90 BSC	
Overall Length	D		4.90 BSC	
Chamfer (Optional)	h	0.25	-	0.50
Foot Length	L	0.40	-	1.27
Footprint	L1		1.04 REF	
Foot Angle	φ	0°	-	8°
Lead Thickness	c	0.17	-	0.25
Lead Width	b	0.31	-	0.51
Mold Draft Angle Top	α	5°	-	15°
Mold Draft Angle Bottom	β	5°	-	15°

Notes:

1. Pin 1 visual index feature may vary, but must be located within the hatched area.
2. § Significant Characteristic
3. Dimensions D and E1 do not include mold flash or protrusions. Mold flash or protrusions shall not exceed 0.15mm per side.
4. Dimensioning and tolerancing per ASME Y14.5M

   BSC: Basic Dimension. Theoretically exact value shown without tolerances.

   REF: Reference Dimension, usually without tolerance, for information purposes only.

Microchip Technology Drawing No. C04-057C Sheet 2 of 2

© 1997-2012 Microchip Technology Inc.

chanhvinh.com

8-Lead Plastic Small Outline (SN) – Narrow, 3.90 mm Body [SOIC]

Note: For the most current package drawings, please see the Microchip Packaging Specification located at http://www.microchip.com/packaging

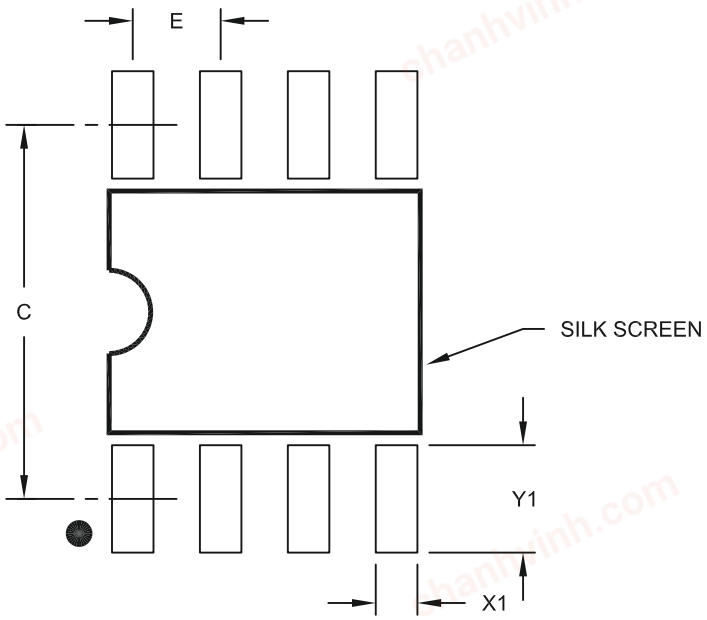

RECOMMENDED LAND PATTERN

Units		MILLIMETERS		
Dimension Limits		MIN	NOM	MAX
Contact Pitch	E		1.27 BSC	
Contact Pad Spacing	C		5.40	
Contact Pad Width (X8)	X1			0.60
Contact Pad Length (X8)	Y1			1.55

Notes:

1. Dimensioning and tolerancing per ASME Y14.5M

BSC: Basic Dimension. Theoretically exact value shown without tolerances.

Microchip Technology Drawing No. C04-2057A

© 1997-2012 Microchip Technology Inc.

chanhvinh.com

8-Lead Plastic Thin Shrink Small Outline (ST) – 4.4 mm Body [TSSOP]

Note: For the most current package drawings, please see the Microchip Packaging Specification located at http://www.microchip.com/packaging

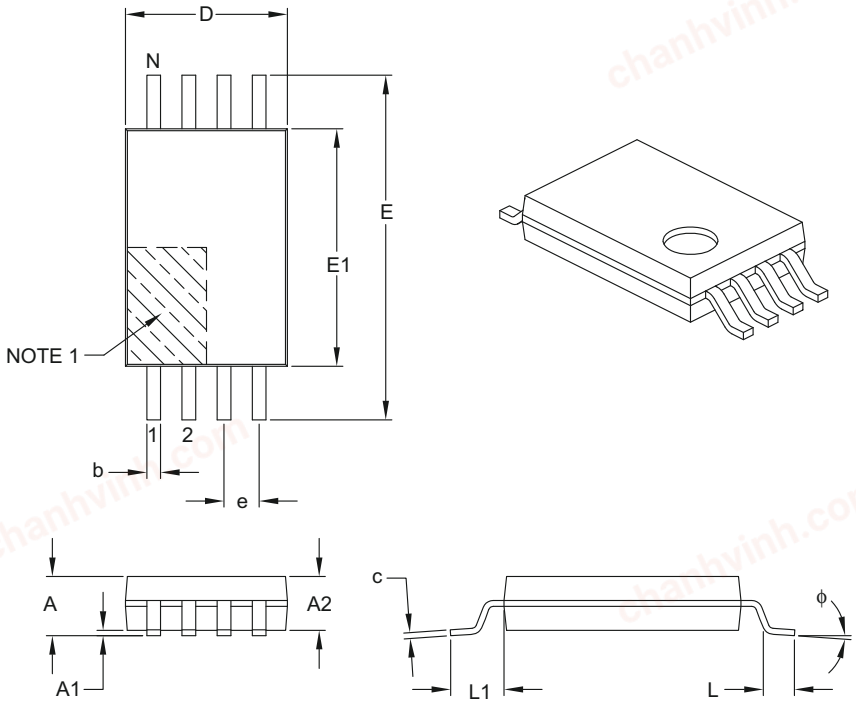

Units		MILLIMETERS		
Dimension Limits		MIN	NOM	MAX
Number of Pins	N		8	
Pitch	e		0.65 BSC	
Overall Height	A	–	–	1.20
Molded Package Thickness	A2	0.80	1.00	1.05
Standoff	A1	0.05	–	0.15
Overall Width	E		6.40 BSC	
Molded Package Width	E1	4.30	4.40	4.50
Molded Package Length	D	2.90	3.00	3.10
Foot Length	L	0.45	0.60	0.75
Footprint	L1		1.00 REF	
Foot Angle	ϕ	0°	–	8°
Lead Thickness	c	0.09	–	0.20
Lead Width	b	0.19	–	0.30

Notes:

1. Pin 1 visual index feature may vary, but must be located within the hatched area.
2. Dimensions D and E1 do not include mold flash or protrusions. Mold flash or protrusions shall not exceed 0.15 mm per side.
3. Dimensioning and tolerancing per ASME Y14.5M.

BSC: Basic Dimension. Theoretically exact value shown without tolerances.
REF: Reference Dimension, usually without tolerance, for information purposes only.

Microchip Technology Drawing C04-086B

© 1997-2012 Microchip Technology Inc.

chanhvinh.com

8-Lead Plastic Thin Shrink Small Outline (ST) - 4.4 mm Body [TSSOP]

Note: For the most current package drawings, please see the Microchip Packaging Specification located at http://www.microchip.com/packaging

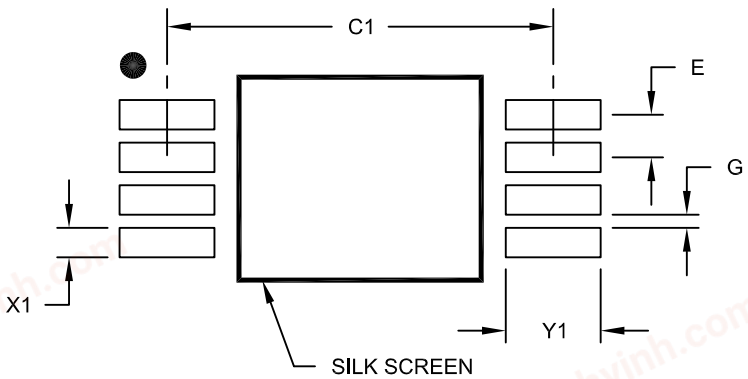

RECOMMENDED LAND PATTERN

Units		MILLIMETERS		
Dimension Limits		MIN	NOM	MAX
Contact Pitch	E		0.65 BSC	
Contact Pad Spacing	C1		5.90	
Contact Pad Width (X8)	X1			0.45
Contact Pad Length (X8)	Y1			1.45
Distance Between Pads	G	0.20		

Notes:

1. Dimensioning and tolerancing per ASME Y14.5M

BSC: Basic Dimension. Theoretically exact value shown without tolerances.

Microchip Technology Drawing No. C04-2086A

© 1997-2012 Microchip Technology Inc.

chanhvinh.com

8-Lead Plastic Micro Small Outline Package (MS) [MSOP]

Note: For the most current package drawings, please see the Microchip Packaging Specification located at http://www.microchip.com/packaging

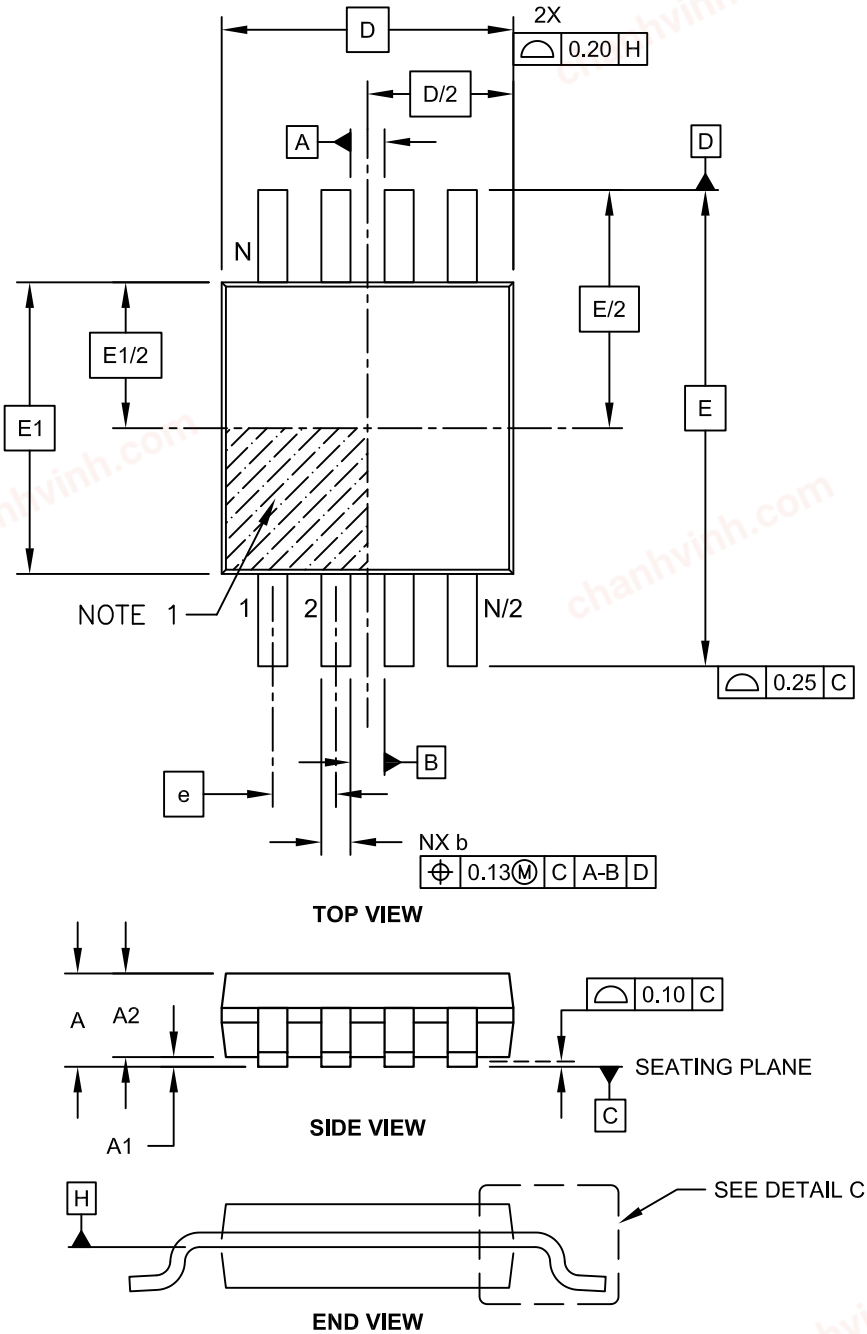

Microchip Technology Drawing C04-111C Sheet 1 of 2

© 1997-2012 Microchip Technology Inc.

chanhvinh.com

8-Lead Plastic Micro Small Outline Package (MS) [MSOP]

Note: For the most current package drawings, please see the Microchip Packaging Specification located at http://www.microchip.com/packaging

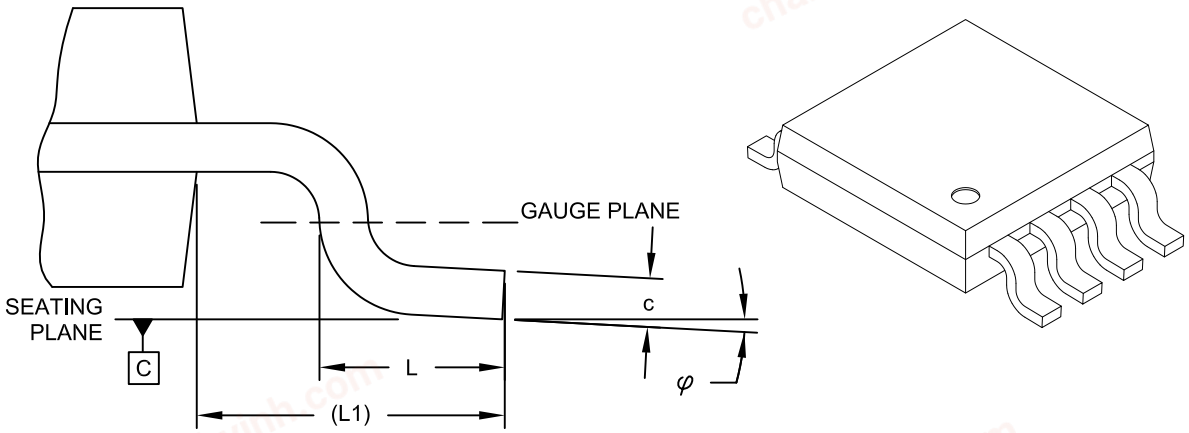

DETAIL C

Units		MILLIMETERS		
Dimension Limits		MIN	NOM	MAX
Number of Pins	N		8	
Pitch	e		0.65 BSC	
Overall Height	A	-	-	1.10
Molded Package Thickness	A2	0.75	0.85	0.95
Standoff	A1	0.00	-	0.15
Overall Width	E		4.90 BSC	
Molded Package Width	E1		3.00 BSC	
Overall Length	D		3.00 BSC	
Foot Length	L	0.40	0.60	0.80
Footprint	L1		0.95 REF	
Foot Angle	φ	0°	-	8°
Lead Thickness	c	0.08	-	0.23
Lead Width	b	0.22	-	0.40

Notes:

1. Pin 1 visual index feature may vary, but must be located within the hatched area.
2. Dimensions D and E1 do not include mold flash or protrusions. Mold flash or protrusions shall not exceed 0.15mm per side.
3. Dimensioning and tolerancing per ASME Y14.5M.
   BSC: Basic Dimension. Theoretically exact value shown without tolerances.
   REF: Reference Dimension, usually without tolerance, for information purposes only.

Microchip Technology Drawing C04-111C Sheet 2 of 2

© 1997-2012 Microchip Technology Inc.

chanhvinh.com

8-Lead Plastic Micro Small Outline Package (MS) [MSOP]

Note: For the most current package drawings, please see the Microchip Packaging Specification located at http://www.microchip.com/packaging

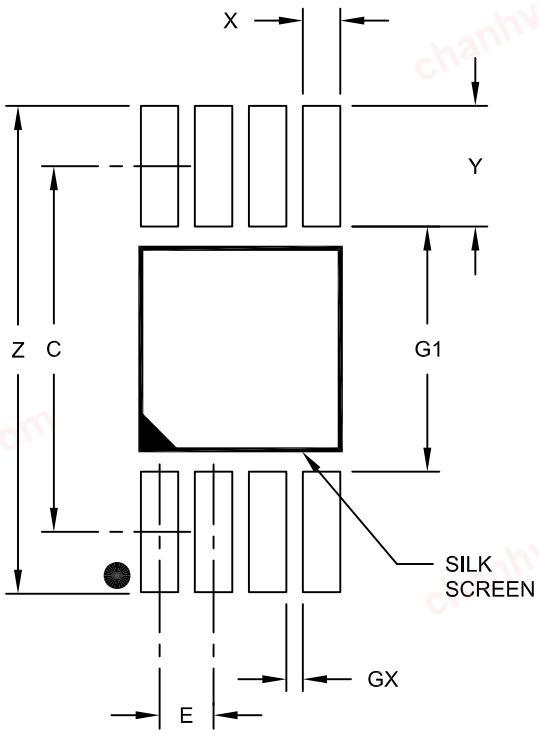

RECOMMENDED LAND PATTERN

Units		MILLIMETERS		
Dimension Limits		MIN	NOM	MAX
Contact Pitch	E		0.65 BSC	
Contact Pad Spacing	C		4.40	
Overall Width	Z			5.85
Contact Pad Width (X8)	X1			0.45
Contact Pad Length (X8)	Y1			1.45
Distance Between Pads	G1	2.95		
Distance Between Pads	GX	0.20		

Notes:

1. Dimensioning and tolerancing per ASME Y14.5M

BSC: Basic Dimension. Theoretically exact value shown without tolerances.

Microchip Technology Drawing No. C04-2111A

© 1997-2012 Microchip Technology Inc.

chanhvinh.com

8-Lead Plastic Dual Flat, No Lead Package (MC) – 2x3x0.9 mm Body [DFN]

Note: For the most current package drawings, please see the Microchip Packaging Specification located at http://www.microchip.com/packaging

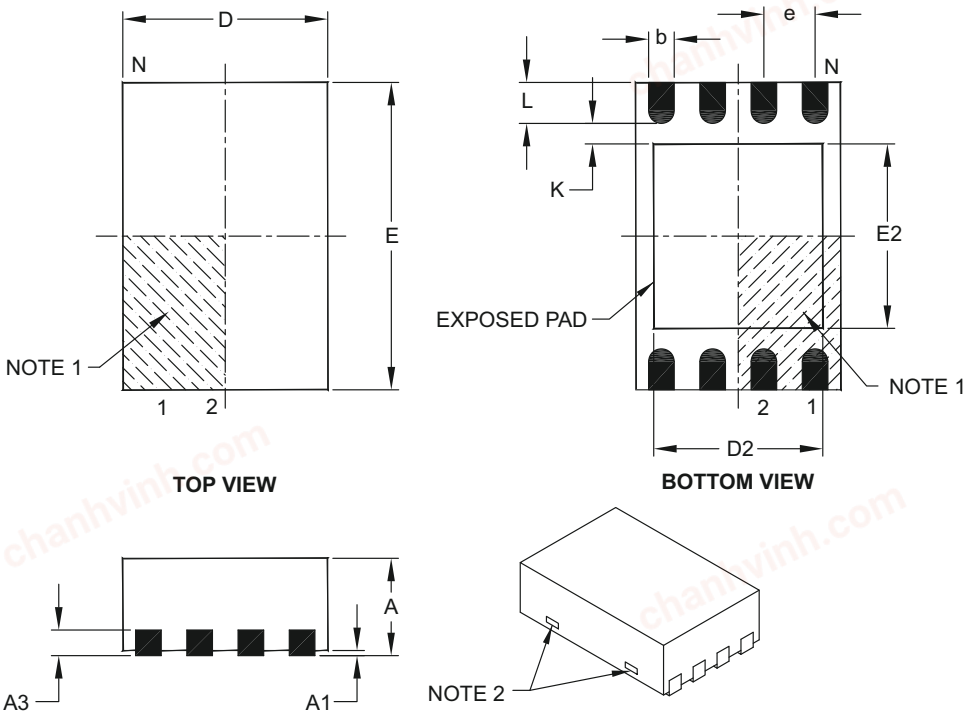

Units		MILLIMETERS		
Dimension Limits		MIN	NOM	MAX
Number of Pins	N		8	
Pitch	e		0.50 BSC	
Overall Height	A	0.80	0.90	1.00
Standoff	A1	0.00	0.02	0.05
Contact Thickness	A3		0.20 REF	
Overall Length	D		2.00 BSC	
Overall Width	E		3.00 BSC	
Exposed Pad Length	D2	1.30	–	1.55
Exposed Pad Width	E2	1.50	–	1.75
Contact Width	b	0.20	0.25	0.30
Contact Length	L	0.30	0.40	0.50
Contact-to-Exposed Pad	K	0.20	–	–

Notes:

1. Pin 1 visual index feature may vary, but must be located within the hatched area.
2. Package may have one or more exposed tie bars at ends.
3. Package is saw singulated.
4. Dimensioning and tolerancing per ASME Y14.5M.

BSC: Basic Dimension. Theoretically exact value shown without tolerances.
REF: Reference Dimension, usually without tolerance, for information purposes only.

Microchip Technology Drawing C04-123C

© 1997-2012 Microchip Technology Inc.

chanhvinh.com

8-Lead Plastic Dual Flat, No Lead Package (MC) - 2x3x0.9mm Body [DFN]

Note: For the most current package drawings, please see the Microchip Packaging Specification located at http://www.microchip.com/packaging

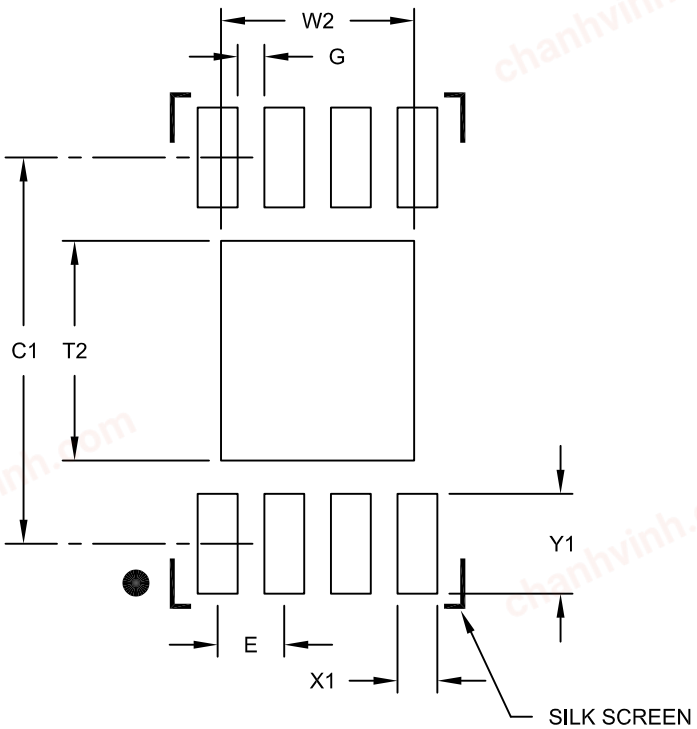

RECOMMENDED LAND PATTERN

Units		MILLIMETERS		
Dimension Limits		MIN	NOM	MAX
Contact Pitch	E		0.50 BSC	
Optional Center Pad Width	W2			1.45
Optional Center Pad Length	T2			1.75
Contact Pad Spacing	C1		2.90	
Contact Pad Width (X8)	X1			0.30
Contact Pad Length (X8)	Y1			0.75
Distance Between Pads	G	0.20		

Notes:

1. Dimensioning and tolerancing per ASME Y14.5M

BSC: Basic Dimension. Theoretically exact value shown without tolerances.

Microchip Technology Drawing No. C04-2123B

© 1997-2012 Microchip Technology Inc.

chanhvinh.com

8-Lead Plastic Dual Flat, No Lead Package (MN) – 2x3x0.75mm Body [TDFN]

Note: For the most current package drawings, please see the Microchip Packaging Specification located at http://www.microchip.com/packaging

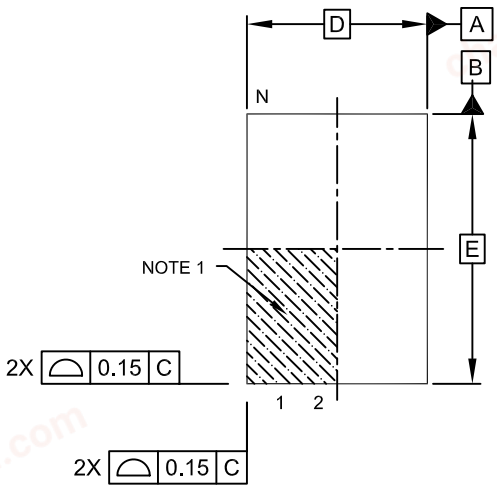

TOP VIEW

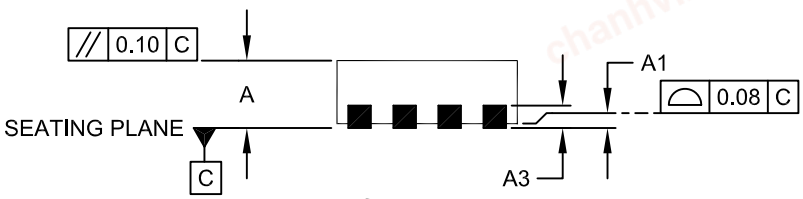

SIDE VIEW

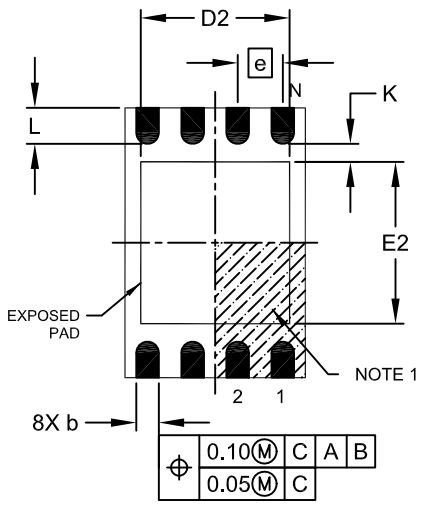

BOTTOM VIEW

Microchip Technology Drawing No. C04-129C Sheet 1 of 2

chanhvinh.com

8-Lead Plastic Dual Flat, No Lead Package (MN) – 2x3x0.75mm Body [TDFN]

Note: For the most current package drawings, please see the Microchip Packaging Specification located at http://www.microchip.com/packaging

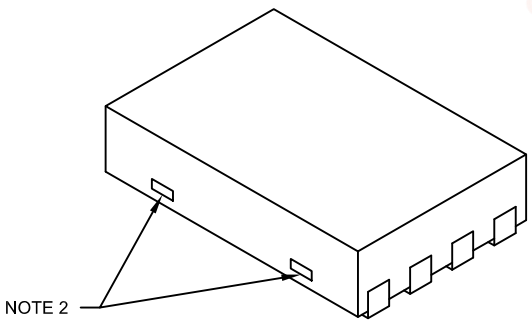

Units		MILLIMETERS		
Dimension Limits		MIN	NOM	MAX
Number of Pins	N		8	
Pitch	e		0.50 BSC	
Overall Height	A	0.70	0.75	0.80
Standoff	A1	0.00	0.02	0.05
Contact Thickness	A3		0.20 REF	
Overall Length	D		2.00 BSC	
Overall Width	E		3.00 BSC	
Exposed Pad Length	D2	1.20	-	1.60
Exposed Pad Width	E2	1.20	-	1.60
Contact Width	b	0.20	0.25	0.30
Contact Length	L	0.25	0.30	0.45
Contact-to-Exposed Pad	K	0.20	-	-

Notes:

1. Pin 1 visual index feature may vary, but must be located within the hatched area.
2. Package may have one or more exposed tie bars at ends.
3. Package is saw singulated
4. Dimensioning and tolerancing per ASME Y14.5M

BSC: Basic Dimension. Theoretically exact value shown without tolerances.
REF: Reference Dimension, usually without tolerance, for information purposes only.

Microchip Technology Drawing No. C04-129C Sheet 2 of 2

© 1997-2012 Microchip Technology Inc.

chanhvinh.com

8-Lead Plastic Dual Flat, No Lead Package (MN) – 2x3x0.75 mm Body [TDFN]

Note: For the most current package drawings, please see the Microchip Packaging Specification located at http://www.microchip.com/packaging

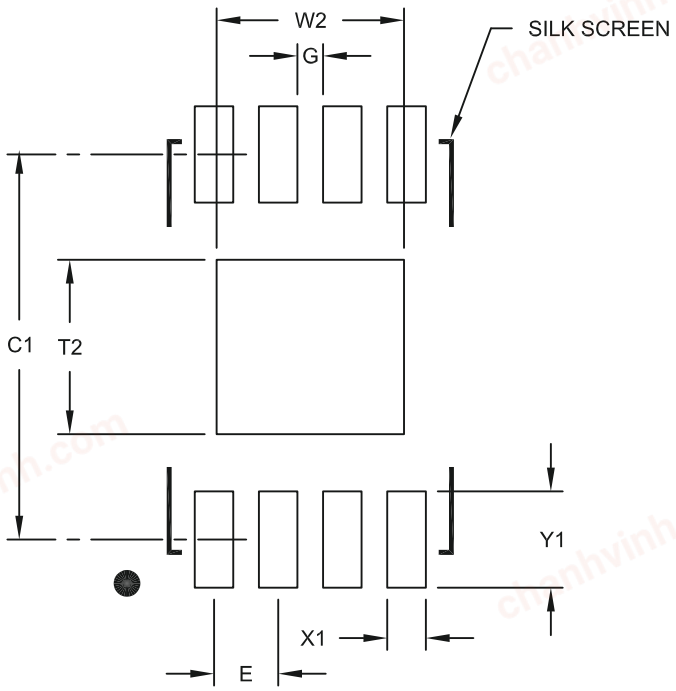

RECOMMENDED LAND PATTERN

Units		MILLIMETERS		
Dimension Limits		MIN	NOM	MAX
Contact Pitch	E		0.50 BSC	
Optional Center Pad Width	W2			1.46
Optional Center Pad Length	T2			1.36
Contact Pad Spacing	C1		3.00	
Contact Pad Width (X8)	X1			0.30
Contact Pad Length (X8)	Y1			0.75
Distance Between Pads	G	0.20		

Notes:

1. Dimensioning and tolerancing per ASME Y14.5M

BSC: Basic Dimension. Theoretically exact value shown without tolerances.

Microchip Technology Drawing No. C04-2129A

© 1997-2012 Microchip Technology Inc.

chanhvinh.com

6-Lead Plastic Small Outline Transistor (OT) [SOT-23]

Note: For the most current package drawings, please see the Microchip Packaging Specification located at http://www.microchip.com/packaging

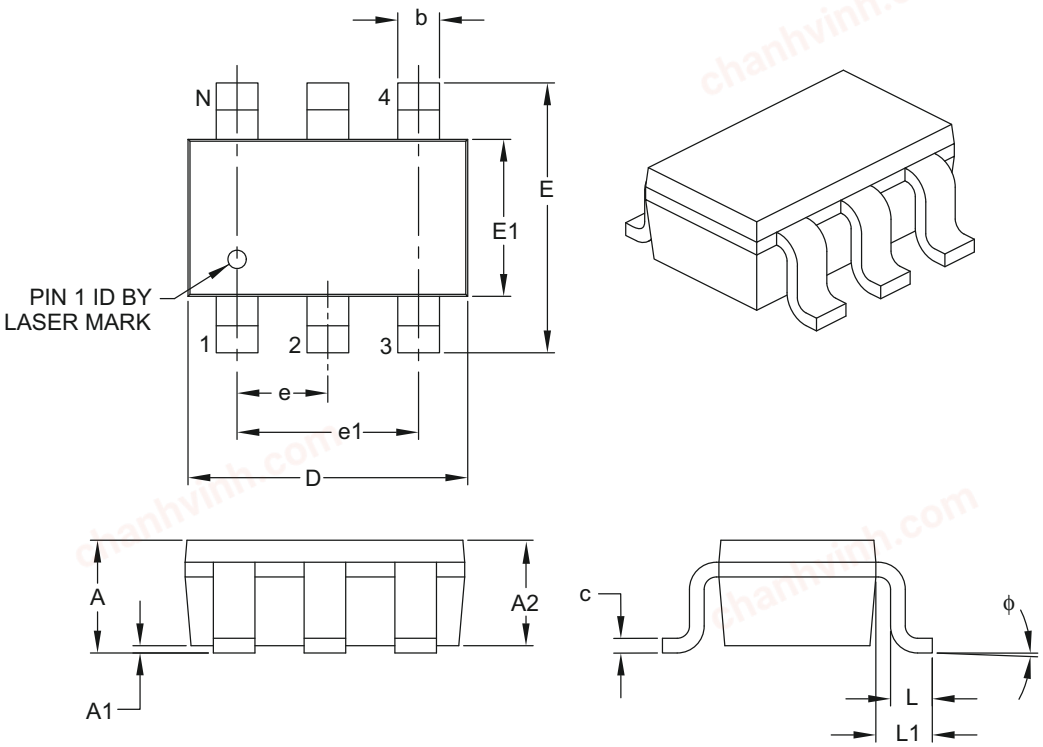

Units		MILLIMETERS		
Dimension Limits		MIN	NOM	MAX
Number of Pins	N		6	
Pitch	e		0.95 BSC	
Outside Lead Pitch	e1		1.90 BSC	
Overall Height	A	0.90	–	1.45
Molded Package Thickness	A2	0.89	–	1.30
Standoff	A1	0.00	–	0.15
Overall Width	E	2.20	–	3.20
Molded Package Width	E1	1.30	–	1.80
Overall Length	D	2.70	–	3.10
Foot Length	L	0.10	–	0.60
Footprint	L1	0.35	–	0.80
Foot Angle	ϕ	0°	–	30°
Lead Thickness	c	0.08	–	0.26
Lead Width	b	0.20	–	0.51

Notes:

1. Dimensions D and E1 do not include mold flash or protrusions. Mold flash or protrusions shall not exceed 0.127 mm per side.
2. Dimensioning and tolerancing per ASME Y14.5M.

BSC: Basic Dimension. Theoretically exact value shown without tolerances.

Microchip Technology Drawing C04-028B

© 1997-2012 Microchip Technology Inc.

chanhvinh.com

6-Lead Plastic Small Outline Transistor (OT) [SOT-23]

Note: For the most current package drawings, please see the Microchip Packaging Specification located at http://www.microchip.com/packaging

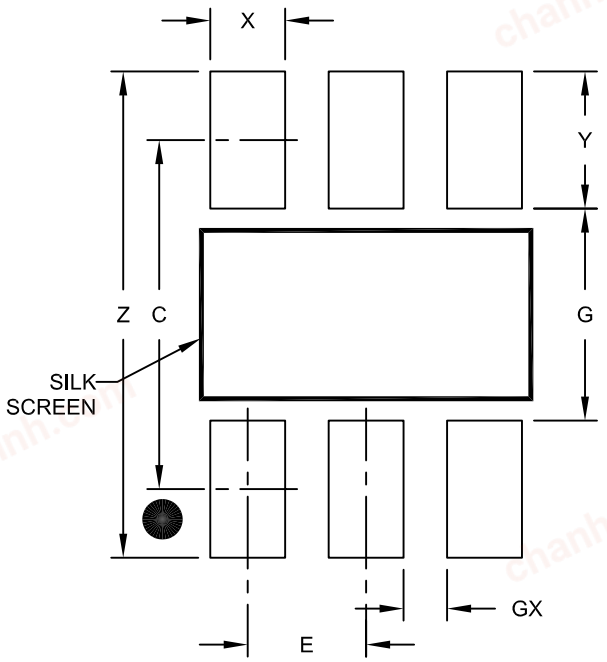

RECOMMENDED LAND PATTERN

Units		MILLIMETERS		
Dimension Limits		MIN	NOM	MAX
Contact Pitch	E		0.95 BSC	
Contact Pad Spacing	C		2.80	
Contact Pad Width (X6)	X			0.60
Contact Pad Length (X6)	Y			1.10
Distance Between Pads	G	1.70		
Distance Between Pads	GX	0.35		
Overall Width	Z			3.90

Notes:

1. Dimensioning and tolerancing per ASME Y14.5M

BSC: Basic Dimension. Theoretically exact value shown without tolerances.

Microchip Technology Drawing No. C04-2028A

chanhvinh.com

APPENDIX A: REVISION HISTORY

Revision A (06/1997)

Initial release.

Revision B (07/1998)

Revision C (08/1999)

Revision D (12/2003)

Corrections to Section 1.0, Electrical Characteristics.

Revision E (04/2005)

Added DFN package.

Revision F (01/2007)

Revised Features Section; Deleted Commercial Temp; Replaced Package Drawings; Replaced On-Line Support page; Revised Product ID System.

Revision G (03/2007)

Replaced Package Drawings (Rev. AM).

Revision H (04/2008)

Replaced Package Drawings; Added TDFN package; Revised Product ID section.

Revision J (08/2008)

Updated Features Section; Added Table 2-1 Pin Function Table; Corrections to Table 1-1, DC Characteristics; Updated Table 1-2, AC Characteristics; Updated Package Drawings.

Revision K (03/2012)

Add 6-Lead SOT-23 Package

© 1997-2012 Microchip Technology Inc.

chanhvinh.com

THE MICROCHIP WEB SITE

Microchip provides online support via our WWW site at www.microchip.com. This web site is used as a means to make files and information easily available to customers. Accessible by using your favorite Internet browser, the web site contains the following information:

- **Product Support** – Data sheets and errata, application notes and sample programs, design resources, user's guides and hardware support documents, latest software releases and archived software
- **General Technical Support** – Frequently Asked Questions (FAQ), technical support requests, online discussion groups, Microchip consultant program member listing
- **Business of Microchip** – Product selector and ordering guides, latest Microchip press releases, listing of seminars and events, listings of Microchip sales offices, distributors and factory representatives

CUSTOMER CHANGE NOTIFICATION SERVICE

Microchip's customer notification service helps keep customers current on Microchip products. Subscribers will receive e-mail notification whenever there are changes, updates, revisions or errata related to a specified product family or development tool of interest.

To register, access the Microchip web site at www.microchip.com. Under "Support", click on "Customer Change Notification" and follow the registration instructions.

CUSTOMER SUPPORT

Users of Microchip products can receive assistance through several channels:

- Distributor or Representative
- Local Sales Office
- Field Application Engineer (FAE)
- Technical Support
- Development Systems Information Line

Customers should contact their distributor, representative or field application engineer (FAE) for support. Local sales offices are also available to help customers. A listing of sales offices and locations is included in the back of this document.

Technical support is available through the web site at: http://microchip.com/support

chanhvinh.com

READER RESPONSE

It is our intention to provide you with the best documentation possible to ensure successful use of your Microchip product. If you wish to provide your comments on organization, clarity, subject matter, and ways in which our documentation can better serve you, please FAX your comments to the Technical Publications Manager at (480) 792-4150.

Please list the following information, and use this outline to provide us with your comments about this document.

TO: Technical Publications Manager Total Pages Sent _____

RE: Reader Response

From: Name _____

Company _____

Address _____

City / State / ZIP / Country _____

Telephone: (_____) _____ - _____ FAX: (_____) _____ - _____

Application (optional):

Would you like a reply? ___Y ___N

Device: 24C01C Literature Number: DS21201K

Questions:

1. What are the best features of this document?

2. How does this document meet your hardware and software development needs?

3. Do you find the organization of this document easy to follow? If not, why?

4. What additions to the document do you think would enhance the structure and subject?

5. What deletions from the document could be made without affecting the overall usefulness?

6. Is there any incorrect or misleading information (what and where)?

7. How would you improve this document?

© 1997-2012 Microchip Technology Inc.

chanhvinh.com

PRODUCT IDENTIFICATION SYSTEM

To order or obtain information, e.g., on pricing or delivery, refer to the factory or the listed sales office.

PART NO.	X	/XX
Device	Temperature Range	Package

Device: 24C01C: 1K I^2C Serial EEPROM
24C01CT:1K I^2C Serial EEPROM (Tape and Reel)

Temperature Range:
I = -40°C to +85°C
E = -40°C to +125°C

Package:
P = Plastic DIP (300 mil body), 8-lead
SN = Plastic SOIC, (3.90 mm body), 8-lead
ST = Plastic TSSOP (4.4 mm body), 8-lead
OT = Plastic SOT-23, 6-lead (Tape and Reel only)
MS = Plastic MSOP (Micro Small Outline), 8-lead
MC = Plastic DFN (2x3x0.90 mm body), 8-lead
MNY(1) = Plastic TDFN (2x7x0.75 mm body), 8-lead

Note 1: "Y" indicates a Nickel, Palladium, Gold (NiPdAu) finish.

Examples:

a) 24C01C-I/P: Industrial Temperature, PDIP Package
b) 24C01C-E/SN: Extended Temperature, SOIC Package
c) 24C01C-I/MNY: Industrial Temperature, 2x3 TDFN Package

chanhvinh.com

chanhvinh.com

NOTES:

chanhvinh.com

© 1997-2012 Microchip Technology Inc.

chanhvinh.com

Note the following details of the code protection feature on Microchip devices:

- Microchip products meet the specification contained in their particular Microchip Data Sheet.
- Microchip believes that its family of products is one of the most secure families of its kind on the market today, when used in the intended manner and under normal conditions.
- There are dishonest and possibly illegal methods used to breach the code protection feature. All of these methods, to our knowledge, require using the Microchip products in a manner outside the operating specifications contained in Microchip's Data Sheets. Most likely, the person doing so is engaged in theft of intellectual property.
- Microchip is willing to work with the customer who is concerned about the integrity of their code.
- Neither Microchip nor any other semiconductor manufacturer can guarantee the security of their code. Code protection does not mean that we are guaranteeing the product as "unbreakable."

Code protection is constantly evolving. We at Microchip are committed to continuously improving the code protection features of our products. Attempts to break Microchip's code protection feature may be a violation of the Digital Millennium Copyright Act. If such acts allow unauthorized access to your software or other copyrighted work, you may have a right to sue for relief under that Act.

Information contained in this publication regarding device applications and the like is provided only for your convenience and may be superseded by updates. It is your responsibility to ensure that your application meets with your specifications. MICROCHIP MAKES NO REPRESENTATIONS OR WARRANTIES OF ANY KIND WHETHER EXPRESS OR IMPLIED, WRITTEN OR ORAL, STATUTORY OR OTHERWISE, RELATED TO THE INFORMATION, INCLUDING BUT NOT LIMITED TO ITS CONDITION, QUALITY, PERFORMANCE, MERCHANTABILITY OR FITNESS FOR PURPOSE**.** Microchip disclaims all liability arising from this information and its use. Use of Microchip devices in life support and/or safety applications is entirely at the buyer's risk, and the buyer agrees to defend, indemnify and hold harmless Microchip from any and all damages, claims, suits, or expenses resulting from such use. No licenses are conveyed, implicitly or otherwise, under any Microchip intellectual property rights.

Trademarks

The Microchip name and logo, the Microchip logo, dsPIC, KEELOQ, KEELOQ logo, MPLAB, PIC, PICmicro, PICSTART, PIC32 logo, rfPIC and UNI/O are registered trademarks of Microchip Technology Incorporated in the U.S.A. and other countries.

FilterLab, Hampshire, HI-TECH C, Linear Active Thermistor, MXDEV, MXLAB, SEEVAL and The Embedded Control Solutions Company are registered trademarks of Microchip Technology Incorporated in the U.S.A.

Analog-for-the-Digital Age, Application Maestro, chipKIT, chipKIT logo, CodeGuard, dsPICDEM, dsPICDEM.net, dsPICworks, dsSPEAK, ECAN, ECONOMONITOR, FanSense, HI-TIDE, In-Circuit Serial Programming, ICSP, Mindi, MiWi, MPASM, MPLAB Certified logo, MPLIB, MPLINK, mTouch, Omniscient Code Generation, PICC, PICC-18, PICDEM, PICDEM.net, PICkit, PICtail, REAL ICE, rfLAB, Select Mode, Total Endurance, TSHARC, UniWinDriver, WiperLock and ZENA are trademarks of Microchip Technology Incorporated in the U.S.A. and other countries.

SQTP is a service mark of Microchip Technology Incorporated in the U.S.A.

All other trademarks mentioned herein are property of their respective companies.

© 1997-2012, Microchip Technology Incorporated, Printed in the U.S.A., All Rights Reserved.

Printed on recycled paper.

ISBN: 9781620761632

QUALITY MANAGEMENT SYSTEM
CERTIFIED BY DNV
═ ISO/TS 16949 ═

Microchip received ISO/TS-16949:2009 certification for its worldwide headquarters, design and wafer fabrication facilities in Chandler and Tempe, Arizona; Gresham, Oregon and design centers in California and India. The Company's quality system processes and procedures are for its PIC® MCUs and dsPIC® DSCs, KEELOQ® code hopping devices, Serial EEPROMs, microperipherals, nonvolatile memory and analog products. In addition, Microchip's quality system for the design and manufacture of development systems is ISO 9001:2000 certified.

chanhvinh.com

Worldwide Sales and Service

AMERICAS

Corporate Office
2355 West Chandler Blvd.
Chandler, AZ 85224-6199
Tel: 480-792-7200
Fax: 480-792-7277
Technical Support:
http://www.microchip.com/support
Web Address:
www.microchip.com

Atlanta
Duluth, GA
Tel: 678-957-9614
Fax: 678-957-1455

Boston
Westborough, MA
Tel: 774-760-0087
Fax: 774-760-0088

Chicago
Itasca, IL
Tel: 630-285-0071
Fax: 630-285-0075

Cleveland
Independence, OH
Tel: 216-447-0464
Fax: 216-447-0643

Dallas
Addison, TX
Tel: 972-818-7423
Fax: 972-818-2924

Detroit
Farmington Hills, MI
Tel: 248-538-2250
Fax: 248-538-2260

Indianapolis
Noblesville, IN
Tel: 317-773-8323
Fax: 317-773-5453

Los Angeles
Mission Viejo, CA
Tel: 949-462-9523
Fax: 949-462-9608

Santa Clara
Santa Clara, CA
Tel: 408-961-6444
Fax: 408-961-6445

Toronto
Mississauga, Ontario, Canada
Tel: 905-673-0699
Fax: 905-673-6509

ASIA/PACIFIC

Asia Pacific Office
Suites 3707-14, 37th Floor
Tower 6, The Gateway
Harbour City, Kowloon
Hong Kong
Tel: 852-2401-1200
Fax: 852-2401-3431

Australia - Sydney
Tel: 61-2-9868-6733
Fax: 61-2-9868-6755

China - Beijing
Tel: 86-10-8569-7000
Fax: 86-10-8528-2104

China - Chengdu
Tel: 86-28-8665-5511
Fax: 86-28-8665-7889

China - Chongqing
Tel: 86-23-8980-9588
Fax: 86-23-8980-9500

China - Hangzhou
Tel: 86-571-2819-3187
Fax: 86-571-2819-3189

China - Hong Kong SAR
Tel: 852-2401-1200
Fax: 852-2401-3431

China - Nanjing
Tel: 86-25-8473-2460
Fax: 86-25-8473-2470

China - Qingdao
Tel: 86-532-8502-7355
Fax: 86-532-8502-7205

China - Shanghai
Tel: 86-21-5407-5533
Fax: 86-21-5407-5066

China - Shenyang
Tel: 86-24-2334-2829
Fax: 86-24-2334-2393

China - Shenzhen
Tel: 86-755-8203-2660
Fax: 86-755-8203-1760

China - Wuhan
Tel: 86-27-5980-5300
Fax: 86-27-5980-5118

China - Xian
Tel: 86-29-8833-7252
Fax: 86-29-8833-7256

China - Xiamen
Tel: 86-592-2388138
Fax: 86-592-2388130

China - Zhuhai
Tel: 86-756-3210040
Fax: 86-756-3210049

ASIA/PACIFIC

India - Bangalore
Tel: 91-80-3090-4444
Fax: 91-80-3090-4123

India - New Delhi
Tel: 91-11-4160-8631
Fax: 91-11-4160-8632

India - Pune
Tel: 91-20-2566-1512
Fax: 91-20-2566-1513

Japan - Osaka
Tel: 81-66-152-7160
Fax: 81-66-152-9310

Japan - Yokohama
Tel: 81-45-471- 6166
Fax: 81-45-471-6122

Korea - Daegu
Tel: 82-53-744-4301
Fax: 82-53-744-4302

Korea - Seoul
Tel: 82-2-554-7200
Fax: 82-2-558-5932 or
82-2-558-5934

Malaysia - Kuala Lumpur
Tel: 60-3-6201-9857
Fax: 60-3-6201-9859

Malaysia - Penang
Tel: 60-4-227-8870
Fax: 60-4-227-4068

Philippines - Manila
Tel: 63-2-634-9065
Fax: 63-2-634-9069

Singapore
Tel: 65-6334-8870
Fax: 65-6334-8850

Taiwan - Hsin Chu
Tel: 886-3-5778-366
Fax: 886-3-5770-955

Taiwan - Kaohsiung
Tel: 886-7-536-4818
Fax: 886-7-330-9305

Taiwan - Taipei
Tel: 886-2-2500-6610
Fax: 886-2-2508-0102

Thailand - Bangkok
Tel: 66-2-694-1351
Fax: 66-2-694-1350

EUROPE

Austria - Wels
Tel: 43-7242-2244-39
Fax: 43-7242-2244-393

Denmark - Copenhagen
Tel: 45-4450-2828
Fax: 45-4485-2829

France - Paris
Tel: 33-1-69-53-63-20
Fax: 33-1-69-30-90-79

Germany - Munich
Tel: 49-89-627-144-0
Fax: 49-89-627-144-44

Italy - Milan
Tel: 39-0331-742611
Fax: 39-0331-466781

Netherlands - Drunen
Tel: 31-416-690399
Fax: 31-416-690340

Spain - Madrid
Tel: 34-91-708-08-90
Fax: 34-91-708-08-91

UK - Wokingham
Tel: 44-118-921-5869
Fax: 44-118-921-5820

11/29/11

© 1997-2012 Microchip Technology Inc.