chanhvinh.com

24AA32A/24LC32A

32-Kbit I²C Serial EEPROM

Device Selection Table

Part Number	Vcc Range	Maximum Clock Frequency	Temperature Ranges	Packages
24AA32A	1.7V-5.5V	400 kHz(1)	I	MS, P, SN, SM, OT, MNY, ST, X/ST
24LC32A	2.5V-5.5V	400 kHz	I, E	MC, P, SN, SM, OT, MNY, MS, ST, X/ST

Note 1: 100 kHz for Vcc <2.5V.

Features

- Single Supply with Operation down to 1.7V for 24AA32A Devices, 2.5V for 24LC32A Devices
- Low-Power CMOS Technology:
  - Active current 1 mA, typical
  - Standby current 1 µA, typical
- Two-Wire Serial Interface, I²C Compatible
- Schmitt Trigger Inputs for Noise Suppression
- Output Slope Control to Eliminate Ground Bounce
- 100 kHz and 400 kHz Clock Compatibility
- Page Write Time: 5 ms, Maximum
- Self-Timed Erase/Write Cycle
- 32-Byte Page Write Buffer
- Hardware Write-Protect
- ESD Protection > 4,000V
- More than 1 Million Erase/Write Cycles
- Data Retention > 200 Years
- Factory Programming Available
- RoHS Compliant
- Temperature Ranges:
  - Industrial (I): -40°C to +85°C
  - Extended (E): -40°C to +125°C
- Automotive AEC-Q100 Qualified

Packages

- 8-Lead DFN, 8-Lead MSOP, 8-Lead PDIP, 8-Lead SOIC, 8-Lead SOIJ, 5-Lead SOT-23, 8-Lead TDFN, 8-Lead TSSOP and 8-Lead X-Rotated TSSOP

Description

The Microchip Technology Inc. 24XX32A(1) is a 32-Kbit Electrically Erasable PROM (EEPROM). The device is organized as a single block of 4K x 8-bit memory with a two-wire serial interface. Its low-voltage design permits operation down to 1.7V, with standby and active currents of only 1 µA and 1 mA, respectively. The 24XX32A also has a page write capability for up to 32 bytes of data. Functional address lines allow up to eight devices on the same bus for up to 256 Kbits address space.

Note 1: 24XX32A is used in this document as a generic part number for the 24AA32A/24LC32A devices.

Block Diagram

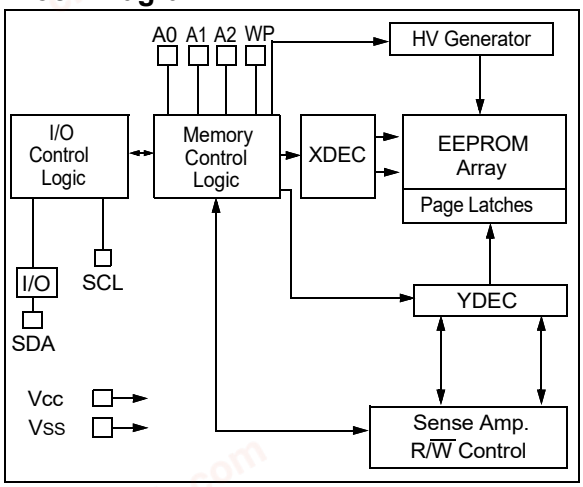

Package Types

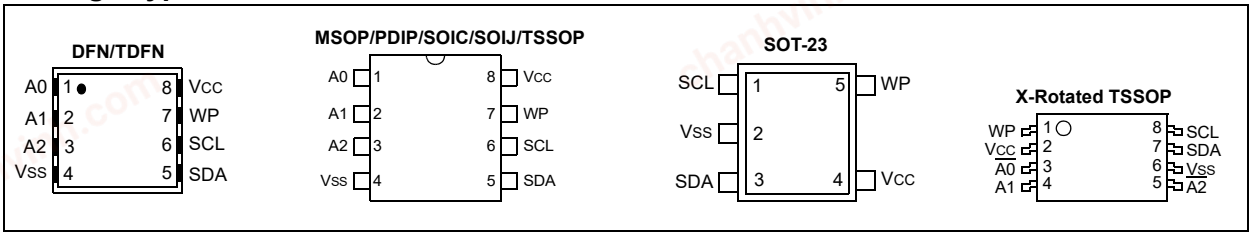

© 2002-2023 Microchip Technology Inc. and its subsidiaries

chanhvinh.com

1.0 ELECTRICAL CHARACTERISTICS

Absolute Maximum Ratings (†)

VCC.....6.5V

All inputs and outputs w.r.t. VSS ..... -0.3V to VCC +1.0V

Storage temperature .....-65°C to +150°C

Ambient temperature with power applied .....-40°C to +125°C

ESD protection on all pins .....≥ 4 kV

† NOTICE: Stresses above those listed under “Absolute Maximum Ratings” may cause permanent damage to the device. This is a stress rating only and functional operation of the device at those or any other conditions above those indicated in the operational listings of this specification is not implied. Exposure to maximum rating conditions for extended periods may affect device reliability.

TABLE 1-1: DC CHARACTERISTICS

DC CHARACTERISTICS			**Industrial (I): TA = -40°C to +85°C, VCC = +1.7V to +5.5V Extended (E): TA = -40°C to +125°C, VCC = +2.5V to +5.5V**			
Param. No.	**Symbol**	**Characteristic**	**Minimum**	**Maximum**	**Units**	**Conditions**
D1	VIH	High-Level Input Voltage	0.7 VCC	—	V	
D2	VIL	Low-Level Input Voltage	—	0.3 VCC	V	VCC ≥ 2.5V
			—	0.2 VCC	V	VCC < 2.5V
D3	VHYS	Hysteresis of Schmitt Trigger Inputs (SDA, SCL pins)	0.05 VCC	—	V	VCC ≥ 2.5V (**Note 1**)
D4	VOL	Low-Level Output Voltage	—	0.40	V	IOL = 3.0 mA, VCC = 4.5V IOL = 2.1 mA, Vcc = 2.5V
D5	ILI	Input Leakage Current	—	±1	µA	VIN = VSS or VCC
D6	ILO	Output Leakage Current	—	±1	µA	VOUT = VSS or VCC
D7	CIN, COUT	Pin Capacitance (all inputs/outputs)	—	10	pF	VCC = 5.0V (**Note 1**) TA = +25°C, FCLK = 1 MHz
D8	ICC write	Operating Current	—	3	mA	VCC = 5.5V, SCL = 400 kHz
D9	ICC read		—	400	µA	VCC = 5.5V, SCL = 400 kHz
D10	ICCS	Standby Current	—	1	µA	SDA = SCL = VCC A0, A1, A2, WP = VSS, I-Temp.
			—	5	µA	SDA = SCL = VCC = 5.5V A0, A1, A2, WP = VSS, E-Temp

Note 1: This parameter is periodically sampled and not 100% tested.

2: Typical measurements taken at room temperature.

© 2002-2023 Microchip Technology Inc. and its subsidiaries

chanhvinh.com

TABLE 1-2: AC CHARACTERISTICS

AC CHARACTERISTICS			Industrial (I): TA = -40°C to +85°C, VCC = +1.7V to +5.5V Extended (E):TA = -40°C to +125°C, VCC = +2.5V to +5.5V			
Param. No.	**Symbol**	**Characteristic**	**Minimum**	**Maximum**	**Units**	**Conditions**
1	FCLK	Clock Frequency	—	400	kHz	2.5V ≤ VCC ≤ 5.5V
			—	100	kHz	1.7V ≤ VCC < 2.5V (**24AA32A**)
2	THIGH	Clock High Time	600	—	ns	2.5V ≤ VCC ≤ 5.5V
			4000	—	ns	1.7V ≤ VCC < 2.5V (**24AA32A**)
3	TLOW	Clock Low Time	1300	—	ns	2.5V ≤ VCC ≤ 5.5V
			4700	—	ns	1.7V ≤ VCC < 2.5V (**24AA32A**)
4	TR	SDA and SCL Rise Time	—	300	ns	2.5V ≤ VCC ≤ 5.5V (**Note 1**)
			—	1000	ns	1.7V ≤ VCC < 2.5V (**24AA32A**) (**Note 1**)
5	TF	SDA and SCL Fall Time	—	300	ns	**Note 1**
6	THD:STA	Start Condition Hold Time	600	—	ns	2.5V ≤ VCC ≤ 5.5V
			4000	—	ns	1.7V ≤ VCC < 2.5V (**24AA32A**)
7	TSU:STA	Start Condition Setup Time	600	—	ns	2.5V ≤ VCC ≤ 5.5V
			4700	—	ns	1.7V ≤ VCC < 2.5V (**24AA32A**)
8	THD:DAT	Data Input Hold Time	0	—	ns	**Note 2**
9	TSU:DAT	Data Input Setup Time	100	—	ns	2.5V ≤ VCC ≤ 5.5V
			250	—	ns	1.7V ≤ VCC < 2.5V (**24AA32A**)
10	TSU:STO	Stop Condition Setup Time	600	—	ns	2.5V ≤ VCC ≤ 5.5V
			4000	—	ns	1.7V ≤ VCC < 2.5V (**24AA32A**)
11	TSU:WP	WP Setup Time	600	—	ns	2.5V ≤ VCC ≤ 5.5V
			4000	—	ns	1.7V ≤ VCC < 2.5V (**24AA32A**)
12	THD:WP	WP Hold Time	1300	—	ns	2.5V ≤ VCC ≤ 5.5V
			4700	—	ns	1.7V ≤ VCC < 2.5V (**24AA32A**)
13	TAA	Output Valid from Clock	—	900	ns	2.5V ≤ VCC ≤ 5.5V (**Note 2**)
			—	3500	ns	1.7V ≤ VCC < 2.5V (**24AA32A**) (**Note 2**)
14	TBUF	Bus free time: Time the bus must be free before a new transmission can start	1300	—	ns	2.5V ≤ VCC ≤ 5.5V
			4700	—	ns	1.7V ≤ VCC < 2.5V (**24AA32A**)
15	TOF	Output Fall Time from VIH Minimum to VIL Maximum	20+0.1CB	250	ns	2.5V ≤ VCC ≤ 5.5V
			—	250	ns	1.7V ≤ VCC < 2.5V (**24AA32A**)
16	TSP	Input Filter Spike Suppression (SDA and SCL pins)	—	50	ns	**Note 1** and **Note 3**
17	TWC	Write Cycle Time (byte or page)	—	5	ms	
18		Endurance	1,000,000	—	cycles	+25°C, 5.5V, Page Mode (**Note 4**)

Note 1: Not 100% tested. CB = total capacitance of one bus line in pF.

2: As a transmitter, the device must provide an internal minimum delay time to bridge the undefined region (minimum 300 ns) of the falling edge of SCL to avoid unintended generation of Start or Stop conditions.

3: The combined TSP and VHYS specifications are due to new Schmitt Trigger inputs, which provide improved noise spike suppression. This eliminates the need for a TI specification for standard operation.

4: This parameter is not tested but ensured by characterization.

© 2002-2023 Microchip Technology Inc. and its subsidiaries

chanhvinh.com

FIGURE 1-1: BUS TIMING DATA

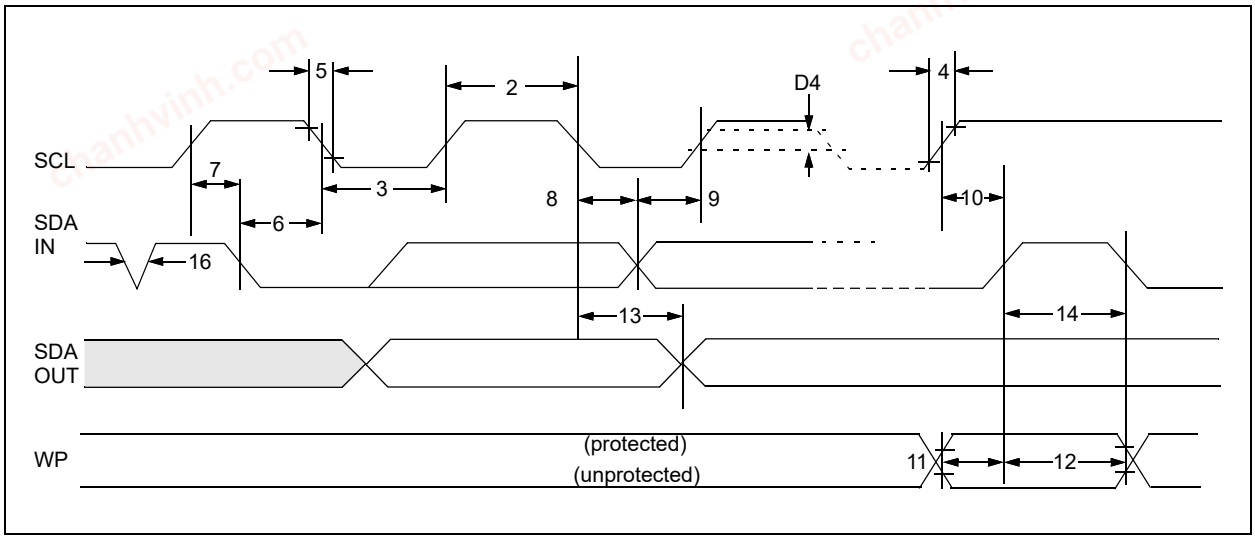

FIGURE 1-2: BUS TIMING START/STOP

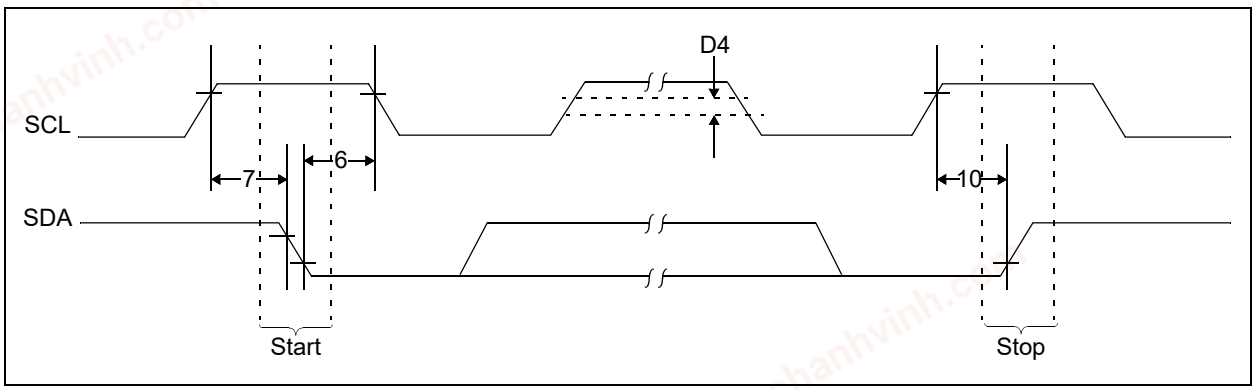

© 2002-2023 Microchip Technology Inc. and its subsidiaries

chanhvinh.com

2.0 PIN DESCRIPTIONS

The descriptions of the pins are listed in Table 2-1.

TABLE 2-1: PIN FUNCTION TABLE

Name	DFN[1]	MSOP	PDIP	SOIC	SOIJ	SOT-23	TDFN[1]	TSSOP	Rotated TSSOP	Description
A0	1	1	1	1	1	—	1	1	3	Chip Address Input
A1	2	2	2	2	2	—	2	2	4	Chip Address Input
A2	3	3	3	3	3	—	3	3	5	Chip Address Input
VSS	4	4	4	4	4	2	4	4	6	Ground
SDA	5	5	5	5	5	3	5	5	7	Serial Address/Data I/O
SCL	6	6	6	6	6	1	6	6	8	Serial Clock
WP	7	7	7	7	7	5	7	7	1	Write-Protect Input
VCC	8	8	8	8	8	4	8	8	2	Power Supply

Note 1: The exposed pad on the DFN/TDFN packages can be connected to VSS or left floating.

2.1 A0, A1, A2 Chip Address Inputs

The A0, A1 and A2 inputs are used by the 24XX32A for multiple device operations. The levels on these inputs are compared with the corresponding bits in the client address. The chip is selected if the comparison is true.

Up to eight devices may be connected to the same bus by using different Chip Select bit combinations. These inputs must be connected to either VCC or VSS.

In most applications, the chip address inputs A0, A1 and A2 are hardwired to logic '0' or logic '1'. For applications in which these pins are controlled by a microcontroller or other programmable device, the chip address pins must be driven to logic '0' or logic '1' before normal device operation can proceed.

Note:	For the SOT-23 package, Chip Address Inputs are not available and are not connected.

2.2 Serial Address/Data Input/Output (SDA)

SDA is a bidirectional pin used to transfer addresses and data into and out of the device. It is an open-drain terminal; therefore, the SDA bus requires a pull-up resistor to VCC (typical 10 kΩ for 100 kHz, 2 kΩ for 400 kHz).

For normal data transfer, SDA is allowed to change only during SCL low. Changes during SCL high are reserved for indicating Start and Stop conditions.

2.3 Serial Clock (SCL)

The SCL input is used to synchronize the data transfer to and from the device.

2.4 Write-Protect (WP)

This pin must be connected to either VSS or VCC. If tied to VSS, write operations are enabled. If tied to VCC, write operations are inhibited, but read operations are not affected.

© 2002-2023 Microchip Technology Inc. and its subsidiaries

chanhvinh.com

3.0 FUNCTIONAL DESCRIPTION

The 24XX32A supports a bidirectional, two-wire bus and data transmission protocol. A device that sends data onto the bus is defined as a transmitter, while a device receiving data is defined as a receiver. The bus has to be controlled by a host device, which generates the Serial Clock (SCL), controls the bus access and generates the Start and Stop conditions, while the 24XX32A works as client. Both host and client can operate as transmitter or receiver, but the host device determines which mode is activated.

4.0 BUS CHARACTERISTICS

The following **bus protocol** has been defined:

- Data transfer may be initiated only when the bus is not busy.
- During data transfer, the data line must remain stable whenever the clock line is high. Changes in the data line while the clock line is high will be interpreted as a Start or Stop condition.

Accordingly, the following bus conditions have been defined (Figure 4-1).

4.1 Bus Not Busy (A)

Both data and clock lines remain high.

4.2 Start Data Transfer (B)

A high-to-low transition of the SDA line while the clock (SCL) is high determines a Start condition. All commands must be preceded by a Start condition.

4.3 Stop Data Transfer (C)

A low-to-high transition of the SDA line while the clock (SCL) is high determines a Stop condition. All operations must end with a Stop condition.

4.4 Data Valid (D)

The state of the data line represents valid data when, after a Start condition, the data line is stable for the duration of the high period of the clock signal.

The data on the line must be changed during the low period of the clock signal. There is one clock pulse per bit of data.

Each data transfer is initiated with a Start condition and terminated with a Stop condition. The number of data bytes transferred between Start and Stop conditions is determined by the host device and is, theoretically, unlimited (although only the last 32 bytes will be stored when doing a write operation). When an overwrite does occur, it will replace data in a First-In First-Out (FIFO) principle.

4.5 Acknowledge

Each receiving device, when addressed, is obliged to generate an Acknowledge after the reception of each byte. The host device must generate an extra clock pulse, which is associated with this Acknowledge bit.

Note:	The 24XX32A does not generate any Acknowledge bits if an internal programming cycle is in progress.

The device that acknowledges has to pull down the SDA line during the Acknowledge clock pulse in such a way that the SDA line is stable-low during the high period of the Acknowledge-related clock pulse. Moreover, setup and hold times must be taken into account. During reads, a host must signal an end of data to the client by not generating an Acknowledge bit on the last byte that has been clocked out of the client. In this case, the client (24XX32A) will leave the data line high to enable the host to generate the Stop condition.

FIGURE 4-1: DATA TRANSFER SEQUENCE ON THE SERIAL BUS

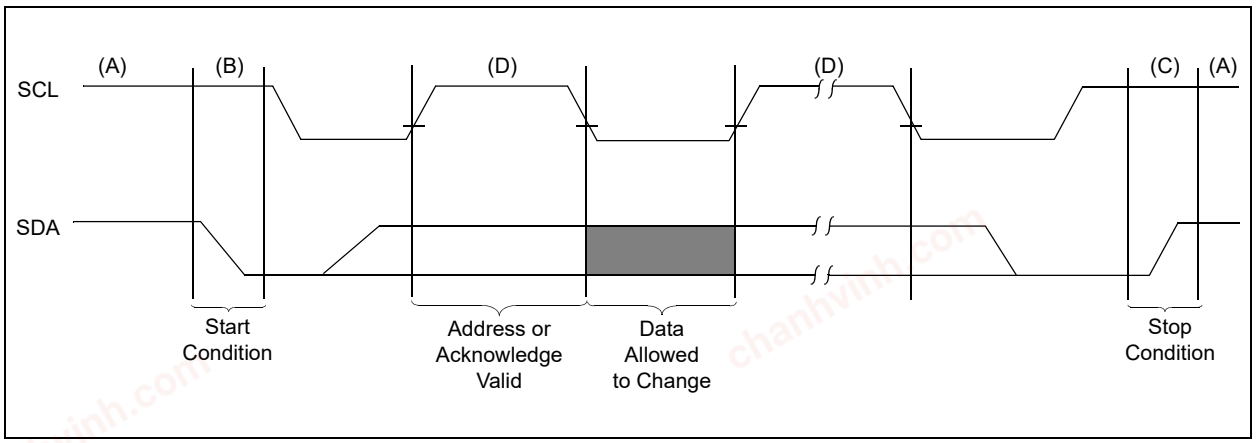

© 2002-2023 Microchip Technology Inc. and its subsidiaries

chanhvinh.com

5.0 DEVICE ADDRESSING

A control byte is the first byte received following the Start condition from the host device. The control byte consists of a 4-bit control code. For the 24XX32A, this is set as '1010' binary for read and write operations. The next 3 bits of the control byte are the Chip Select bits (A2, A1, A0). The Chip Select bits allow the use of up to eight 24XX32A devices on the same bus and are used to select which device is accessed. The Chip Select bits in the control byte must correspond to the logic levels on the corresponding A2, A1 and A0 pins for the device to respond. These bits are, in effect, the three Most Significant bits of the word address. The combination of the 4-bit control code and the next three bits is called the client address.

For the SOT-23 package, the address pins are not available. During device addressing, the A1, A2 and A0 Chip Selects bits should be set to '0'.

The last bit of the control byte is the Read/$\overline{\text{Write}}$ (R/$\overline{\text{W}}$) bit and it defines the operation to be performed. When set to a '1', a read operation is selected. When set to a '0', a write operation is selected. The next two bytes received define the address of the first data byte (Figure 5-2). Because only A11 to A0 are used, the upper four address bits are "don't care" bits. The upper address bits are transferred first, followed by the Less Significant bits.

Following the Start condition, the 24XX32A monitors the SDA bus checking the device type identifier being transmitted and, upon receiving a valid client address and the R/$\overline{\text{W}}$ bit, the client device outputs an Acknowledge signal on the SDA line. Depending on the state of the R/$\overline{\text{W}}$ bit, the 24XX32A will select a read or write operation.

FIGURE 5-1: CONTROL BYTE FORMAT

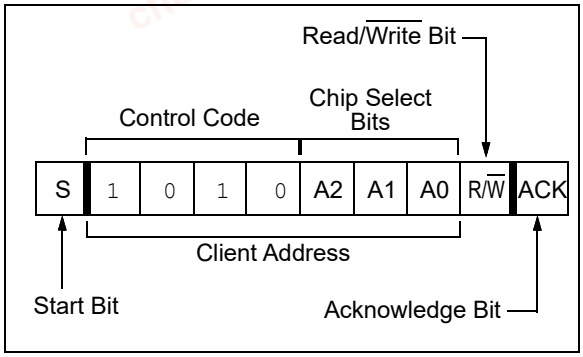

5.1 Contiguous Addressing Across Multiple Devices

The Chip Select bits A2, A1 and A0 can be used to expand the contiguous address space for up to 256 Kbits by adding up to eight 24XX32A devices on the same bus. In this case, the software can use A0 of the control byte as address bit A12, A1 as address bit A13, and A2 as address bit A14. It is not possible to sequentially read across device boundaries.

The SOT-23 package does not support multiple device addressing on the same bus.

FIGURE 5-2: ADDRESS SEQUENCE BIT ASSIGNMENTS

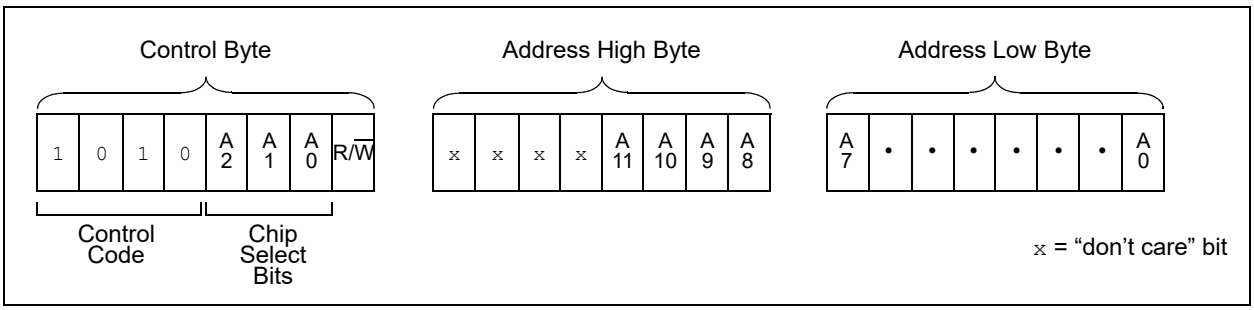

chanhvinh.com

6.0 WRITE OPERATIONS

6.1 Byte Write

Following the Start condition from the host, the control code (4 bits), the Chip Select (3 bits), and the R/$\overline{W}$ bit (which is a logic low) are clocked onto the bus by the host transmitter. This indicates to the addressed client receiver that the address high byte will follow once it has generated an Acknowledge bit during the ninth clock cycle. Therefore, the next byte transmitted by the host is the high-order byte of the word address and will be written into the Address Pointer of the 24XX32A. The next byte is the Least Significant Address Byte. After receiving another Acknowledge signal from the 24XX32A, the host device will transmit the data word to be written into the addressed memory location. The 24XX32A acknowledges again and the host generates a Stop condition. This initiates the internal write cycle and, during this time, the 24XX32A will not generate Acknowledge signals (Figure 6-1). If an attempt is made to write to the array with the WP pin held high, the device will acknowledge the command, but no write cycle will occur, no data will be written, and the device will immediately accept a new command. After a byte Write command, the internal Address Pointer will point to the address location following the one that was just written.

Note:	When doing a write of less than 32-bytes, the data in the rest of the page is refreshed along with the data bytes being written. This will force the entire page to endure a write cycle. For this reason, endurance is specified per page.

6.2 Page Write

The write control byte, word address and the first data byte are transmitted to the 24XX32A in the same way as in a byte write. However, instead of generating a Stop condition, the host transmits up to 31 additional bytes which are temporarily stored in the on-chip page buffer and will be written into memory once the host has transmitted a Stop condition. Upon receipt of each word, the five lower Address Pointer bits, which form the byte counter, are internally incremented by one. The higher-order seven bits of the word address remain constant. If the host should transmit more than 32-bytes prior to generating the Stop condition, the Address Pointer will roll over and the previously received data will be overwritten. As with the byte write operation, once the Stop condition is received, an internal write cycle will begin (Figure 6-2). If an attempt is made to write to the array with the WP pin held high, the device will acknowledge the command, but no write cycle will occur, no data will be written, and the device will immediately accept a new command.

Note:	Page write operations are limited to writing bytes within a single physical page **regardless** of the number of bytes actually being written. Physical page boundaries start at addresses that are integer multiples of the page buffer size (or 'page size') and end at addresses that are integer multiples of page size – 1. If a page write command attempts to write across a physical page boundary, the result is that the data wrap around to the beginning of the current page (overwriting data previously stored there), instead of being written to the next page as might be expected. It is, therefore, necessary for the application software to prevent page write operations that would attempt to cross a page boundary.

6.3 Write Protection

The WP pin allows the user to write-protect the entire array (000-FFF) when the pin is tied to VCC. If tied to VSS the write protection is disabled. The WP pin is sampled at the Stop bit for every Write command (Figure 4-1). Toggling the WP pin after the Stop bit will have no effect on the execution of the write cycle.

© 2002-2023 Microchip Technology Inc. and its subsidiaries

chanhvinh.com

FIGURE 6-1: BYTE WRITE

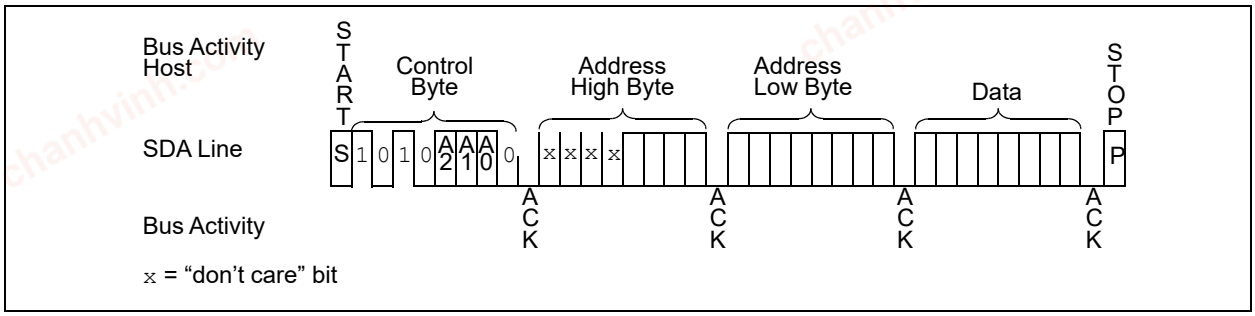

FIGURE 6-2: PAGE WRITE

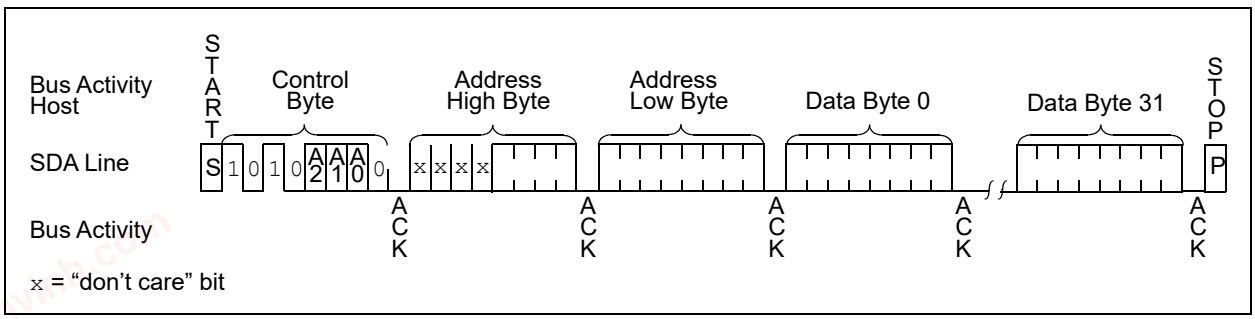

chanhvinh.com

7.0 ACKNOWLEDGE POLLING

Since the device will not acknowledge during a write cycle, acknowledge polling can be used to determine when the cycle is complete (this feature can be used to maximize bus throughput). Once the Stop condition for a write command has been issued from the host, the device initiates the internally-timed write cycle. ACK polling can then be initiated immediately. This involves the host sending a Start condition followed by the control byte for a write command (R/$\overline{W}$ = 0). If the device is still busy with the write cycle, then no ACK will be returned. If no ACK is returned, the Start bit and control byte must be resent. If the cycle is complete, the device will return the ACK and the host can then proceed with the next read or write operation. See Figure 7-1 for flow diagram of this operation.

FIGURE 7-1: ACKNOWLEDGE POLLING FLOW

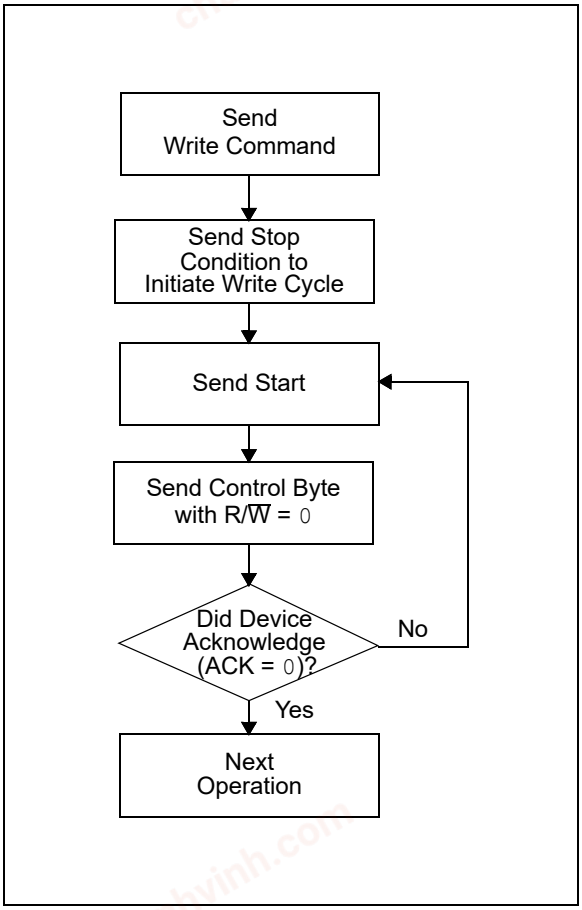

© 2002-2023 Microchip Technology Inc. and its subsidiaries

chanhvinh.com

8.0 READ OPERATION

Read operations are initiated in the same way as write operations, with the exception that the R/$\overline{W}$ bit of the control byte is set to '1'. There are three basic types of read operations: current address read, random read and sequential read.

8.1 Current Address Read

The 24XX32A contains an Address Pointer that maintains the address of the last word accessed, internally incremented by '1'. Therefore, if the previous read access was to address 'n' (n is any legal address), the next current address read operation would access data from address n + 1.

Upon receipt of the control byte with R/$\overline{W}$ bit set to '1', the 24XX32A issues an Acknowledge and transmits the 8-bit data word. The host will not acknowledge the transfer, but does generate a Stop condition and the 24XX32A discontinues transmission (Figure 8-1).

8.2 Random Read

Random read operations allow the host to access any memory location in a random manner. To perform this type of read operation, the word address must first be set. This is accomplished by sending the word address to the 24XX32A as part of a write operation (R/$\overline{W}$ bit set to '0'). Once the word address is sent, the host generates a Start condition following the Acknowledge. This terminates the write operation, but not before the internal Address Pointer is set. The host issues the control byte again, but with the R/$\overline{W}$ bit set to a '1'. The 24XX32A will then issue an Acknowledge and transmit the 8-bit data word. The host will not acknowledge the transfer, but does generate a Stop condition, which causes the 24XX32A to discontinue transmission (Figure 8-2). After a random Read command, the internal Address Pointer will point to the address location following the one that was just read.

8.3 Sequential Read

Sequential reads are initiated in the same way as random reads, except that once the 24XX32A transmits the first data byte, the host issues an Acknowledge as opposed to the Stop condition used in a random read. This Acknowledge directs the 24XX32A to transmit the next sequentially addressed 8-bit word (Figure 8-3). Following the final byte transmitted to the host, the host will NOT generate an Acknowledge, but will generate a Stop condition. To provide sequential reads, the 24XX32A contains an internal Address Pointer, which is incremented by '1' upon completion of each operation. This Address Pointer allows the entire memory contents to be serially read during one operation. The internal Address Pointer will automatically roll over from address FFF to address 000 if the host acknowledges the byte received from the array address FFF.

FIGURE 8-1: CURRENT ADDRESS READ

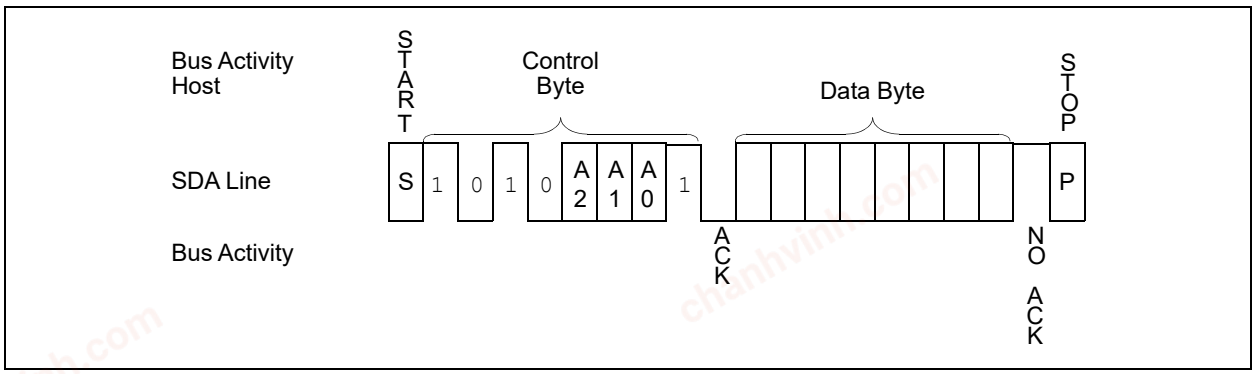

chanhvinh.com

FIGURE 8-2: RANDOM READ

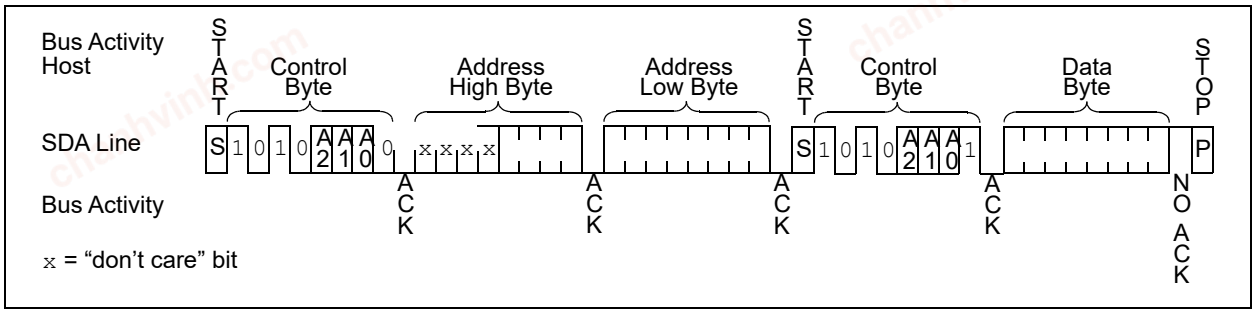

FIGURE 8-3: SEQUENTIAL READ

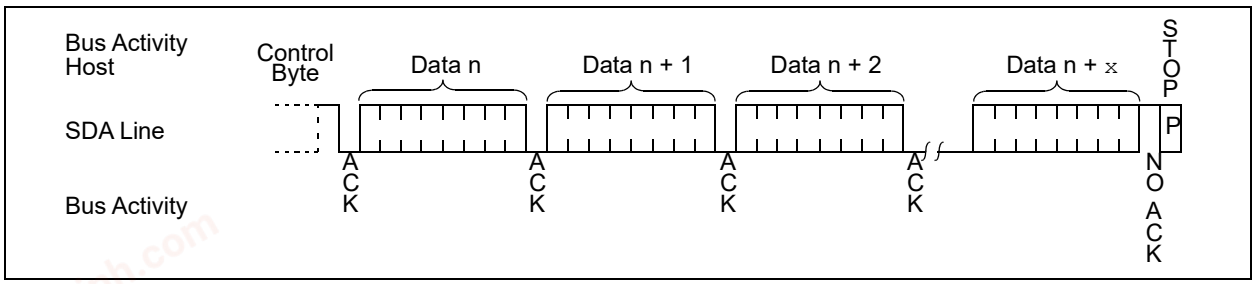

© 2002-2023 Microchip Technology Inc. and its subsidiaries

chanhvinh.com

9.0 PACKAGING INFORMATION

9.1 Package Marking Information

8-Lead 2x3 DFN

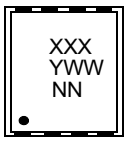

Example

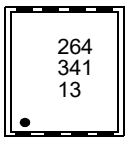

8-Lead MSOP

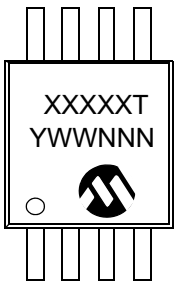

Example



8-Lead PDIP (300 mil)

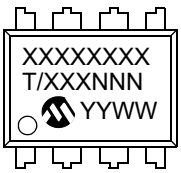

Example

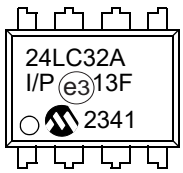

8-Lead SOIC (3.90 mm)

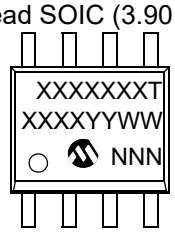

Example



8-Lead SOIJ (5.28 mm)

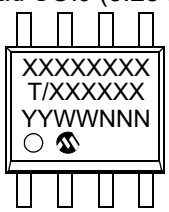

Example

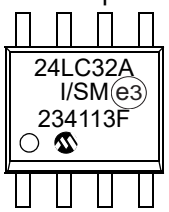

5-Lead SOT-23

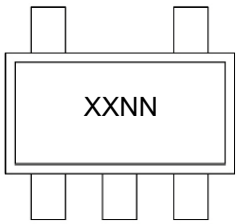

Example

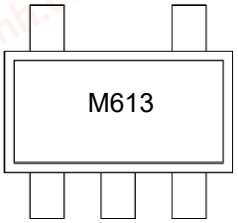

© 2002-2023 Microchip Technology Inc. and its subsidiaries

chanhvinh.com

8-Lead 2x3 TDFN

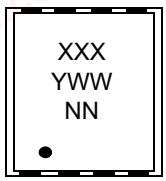

Example

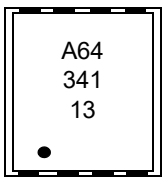

8-Lead TSSOP

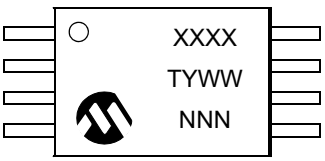

Example

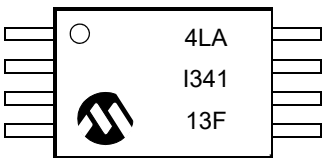

Part Number	1st Line Marking Codes								
	DFN		MSOP	SOT-23		TDFN		TSSOP	TSSOP X-Rotated
	I-Temp.	E-Temp.		I-Temp.	E-Temp.	I-Temp.	E-Temp.		
24AA32A	261	—	4A32AT	B6NN	—	A61	—	4AA	4AAX
24LC32A	264	265	4L32AT	M6NN	N6NN	A64	A65	4LA	4LAX

Legend:	XX...X	Part number or part number code
	T	Temperature (I, E)
	Y	Year code (last digit of calendar year)
	YY	Year code (last 2 digits of calendar year)
	WW	Week code (week of January 1 is week ‘01’)
	NNN	Alphanumeric traceability code (2 characters for small packages)
	(e3)	JEDEC® designator for Matte Tin (Sn)

Note: Standard OTP marking consists of Microchip part number, year code, week code, and traceability code.

Note: For very small packages with no room for the JEDEC® designator (e3), the marking will only appear on the outer carton or reel label.

Note: In the event the full Microchip part number cannot be marked on one line, it will be carried over to the next line, thus limiting the number of available characters for customer-specific information.

© 2002-2023 Microchip Technology Inc. and its subsidiaries

chanhvinh.com

8-Lead Plastic Dual Flat, No Lead Package (MC) - 2x3x1 mm Body [DFN]

Note: For the most current package drawings, please see the Microchip Packaging Specification located at http://www.microchip.com/packaging

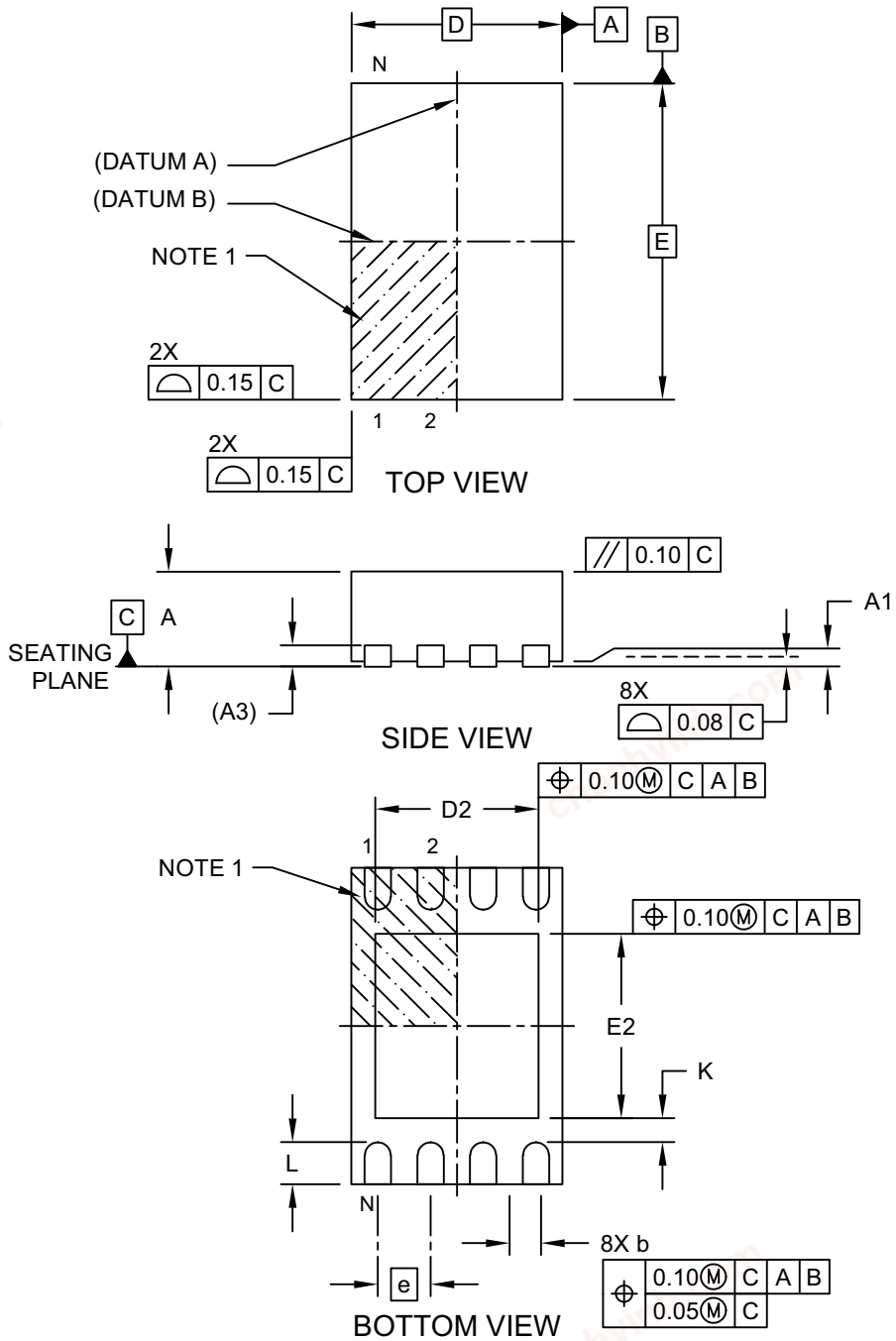

Microchip Technology Drawing C04-123 Rev E Sheet 1 of 2

chanhvinh.com

8-Lead Plastic Dual Flat, No Lead Package (MC) - 2x3x1 mm Body [DFN]

Note: For the most current package drawings, please see the Microchip Packaging Specification located at http://www.microchip.com/packaging

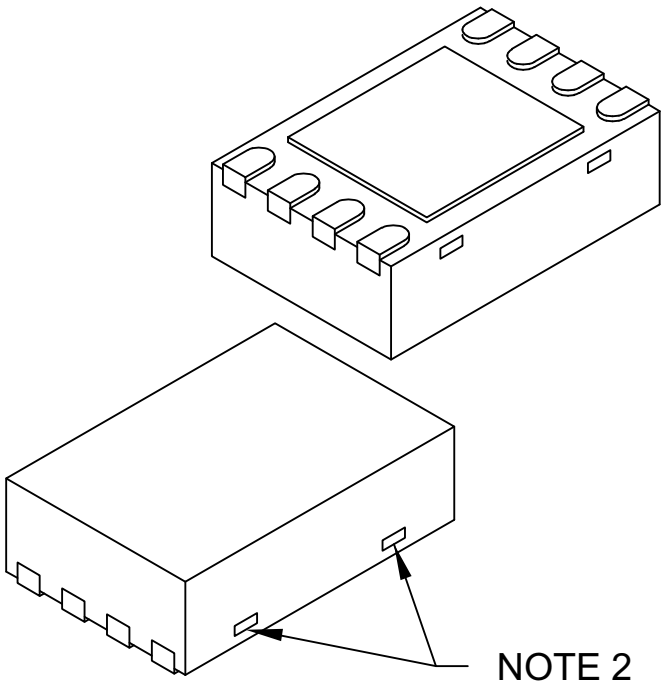

Units		MILLIMETERS		
Dimension Limits		MIN	NOM	MAX
Number of Terminals	N		8	
Pitch	e		0.50 BSC	
Overall Height	A	0.80	0.90	1.00
Standoff	A1	0.00	0.02	0.05
Terminal Thickness	A3		0.20 REF	
Overall Length	D		2.00 BSC	
Exposed Pad Length	D2	1.30	-	1.55
Overall Width	E		3.00 BSC	
Exposed Pad Width	E2	1.50	-	1.75
Terminal Width	b	0.20	0.25	0.30
Terminal Length	L	0.30	0.40	0.50
Terminal-to-Exposed-Pad	K	0.20	-	-

Notes:

1. Pin 1 visual index feature may vary, but must be located within the hatched area.
2. Package may have one or more exposed tie bars at ends.
3. Package is saw singulated
4. Dimensioning and tolerancing per ASME Y14.5M

   BSC: Basic Dimension. Theoretically exact value shown without tolerances.
   REF: Reference Dimension, usually without tolerance, for information purposes only.

Microchip Technology Drawing C04-123 Rev E Sheet 2 of 2

© 2002-2023 Microchip Technology Inc. and its subsidiaries

chanhvinh.com

8-Lead Plastic Dual Flat, No Lead Package (MC) - 2x3x1 mm Body [DFN]

Note: For the most current package drawings, please see the Microchip Packaging Specification located at http://www.microchip.com/packaging

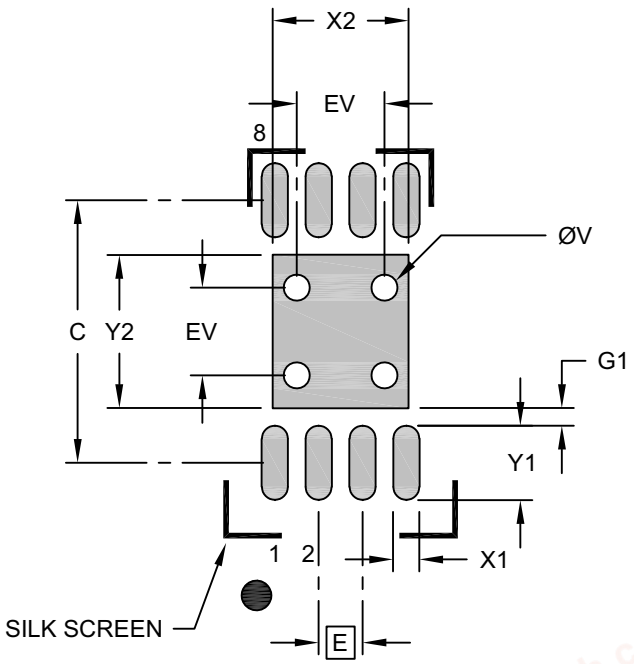

RECOMMENDED LAND PATTERN

Units		MILLIMETERS		
Dimension Limits		MIN	NOM	MAX
Contact Pitch	E		0.50 BSC	
Optional Center Pad Width	X2			1.55
Optional Center Pad Length	Y2			1.75
Contact Pad Spacing	C		3.00	
Contact Pad Width (X8)	X1			0.30
Contact Pad Length (X8)	Y1			0.85
Contact Pad to Center Pad (X8)	G1	0.20		
Thermal Via Diameter	V		0.30	
Thermal Via Pitch	EV		1.00	

Notes:

1. Dimensioning and tolerancing per ASME Y14.5M
   BSC: Basic Dimension. Theoretically exact value shown without tolerances.
2. For best soldering results, thermal vias, if used, should be filled or tented to avoid solder loss during reflow process

Microchip Technology Drawing C04-2123 Rev E

© 2002-2023 Microchip Technology Inc. and its subsidiaries

chanhvinh.com

8-Lead Plastic Micro Small Outline Package (MS) - 3x3 mm Body [MSOP]

Note: For the most current package drawings, please see the Microchip Packaging Specification located at http://www.microchip.com/packaging

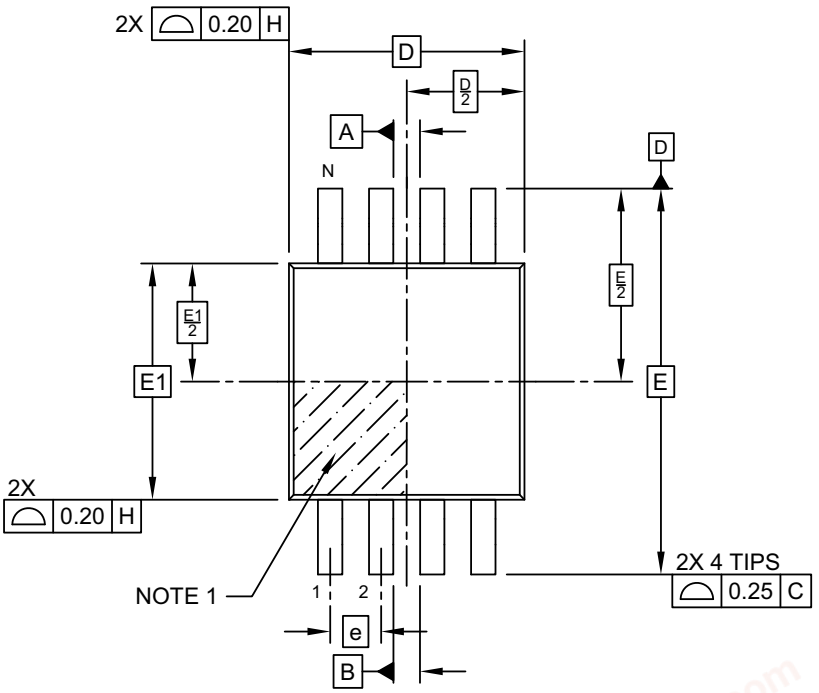

TOP VIEW

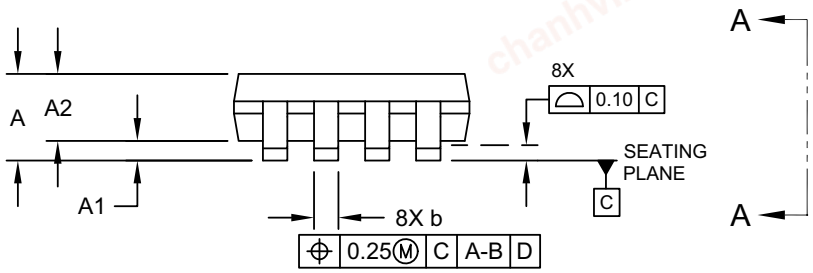

SIDE VIEW

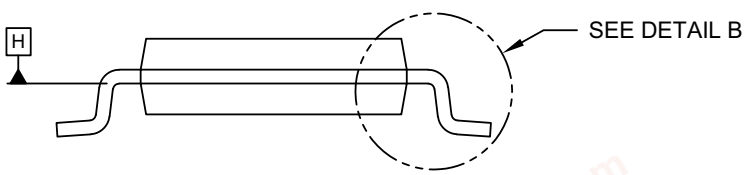

VIEW A–A

Microchip Technology Drawing C04-111-MS Rev F Sheet 1 of 2

© 2002-2023 Microchip Technology Inc. and its subsidiaries

chanhvinh.com

8-Lead Plastic Micro Small Outline Package (MS) - 3x3 mm Body [MSOP]

Note: For the most current package drawings, please see the Microchip Packaging Specification located at http://www.microchip.com/packaging

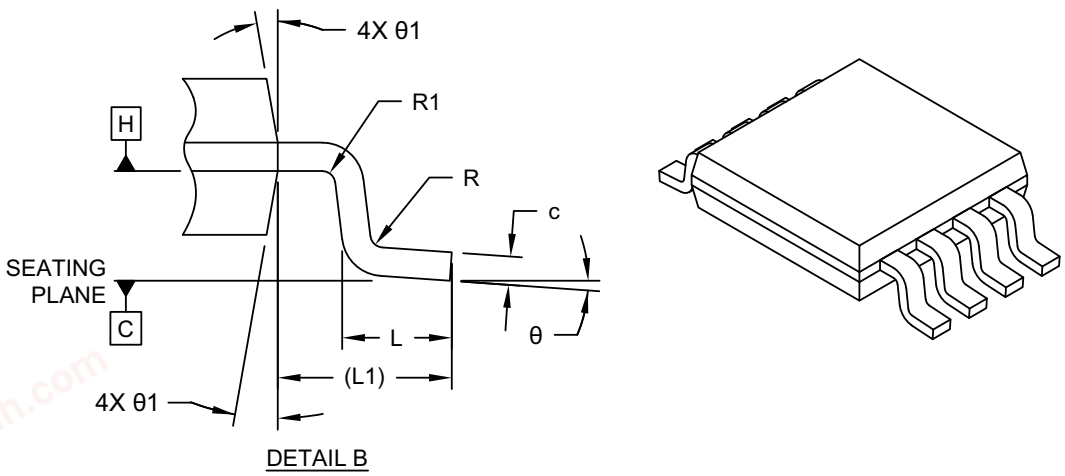

Units		MILLIMETERS		
Dimension Limits		MIN	NOM	MAX
Number of Terminals	N		8	
Pitch	e		0.65 BSC	
Overall Height	A	–	–	1.10
Standoff	A1	0.00	–	0.15
Molded Package Thickness	A2	0.75	0.85	0.95
Overall Length	D		3.00 BSC	
Overall Width	E		4.90 BSC	
Molded Package Width	E1		3.00 BSC	
Terminal Width	b	0.22	–	0.40
Terminal Thickness	c	0.08	–	0.23
Terminal Length	L	0.40	0.60	0.80
Footprint	L1		0.95 REF	
Lead Bend Radius	R	0.07	–	–
Lead Bend Radius	R1	0.07	–	–
Foot Angle	θ	0°	–	8°
Mold Draft Angle	θ1	5°	–	15°

Notes:

1. Pin 1 visual index feature may vary, but must be located within the hatched area.
2. Dimensions D and E1 do not include mold flash or protrusions. Mold flash or protrusions shall not exceed 0.15mm per side.
3. Dimensioning and tolerancing per ASME Y14.5M
   BSC: Basic Dimension. Theoretically exact value shown without tolerances.
   REF: Reference Dimension, usually without tolerance, for information purposes only.

Microchip Technology Drawing C04-111-MS Rev F Sheet 2 of 2

© 2002-2023 Microchip Technology Inc. and its subsidiaries

chanhvinh.com

8-Lead Plastic Micro Small Outline Package (MS) - 3x3 mm Body [MSOP]

Note: For the most current package drawings, please see the Microchip Packaging Specification located at http://www.microchip.com/packaging

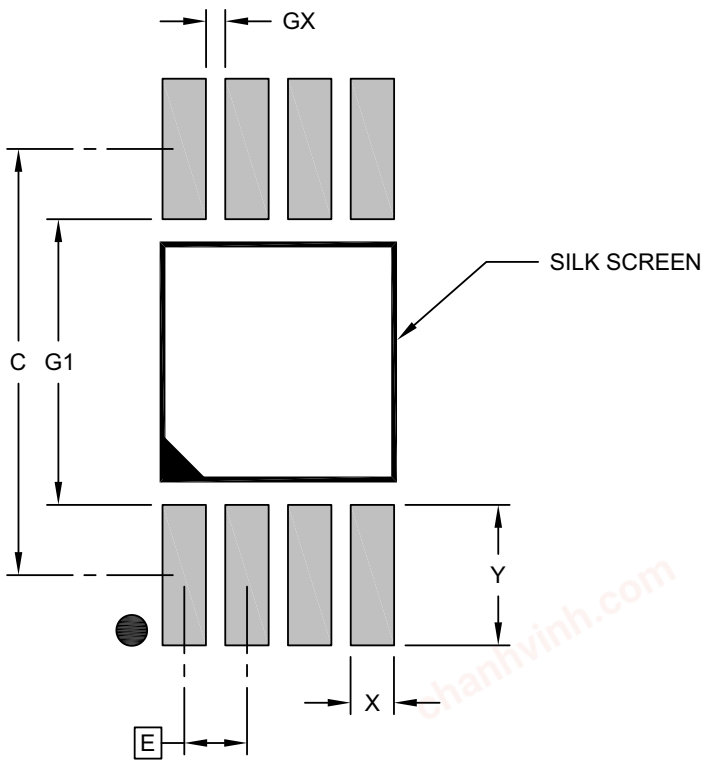

RECOMMENDED LAND PATTERN

Units		MILLIMETERS		
Dimension Limits		MIN	NOM	MAX
Contact Pitch	E		0.65 BSC	
Contact Pad Spacing	C		4.40	
Contact Pad Width (X8)	X			0.45
Contact Pad Length (X8)	Y			1.45
Contact Pad to Contact Pad (X4)	G1	2.95		
Contact Pad to Contact Pad (X6)	GX	0.20		

Notes:

1. Dimensioning and tolerancing per ASME Y14.5M
   BSC: Basic Dimension. Theoretically exact value shown without tolerances.

Microchip Technology Drawing C04-2111-MS Rev F

© 2002-2023 Microchip Technology Inc. and its subsidiaries

chanhvinh.com

8-Lead Plastic Dual In-Line (P) - 300 mil Body [PDIP]

Note: For the most current package drawings, please see the Microchip Packaging Specification located at http://www.microchip.com/packaging

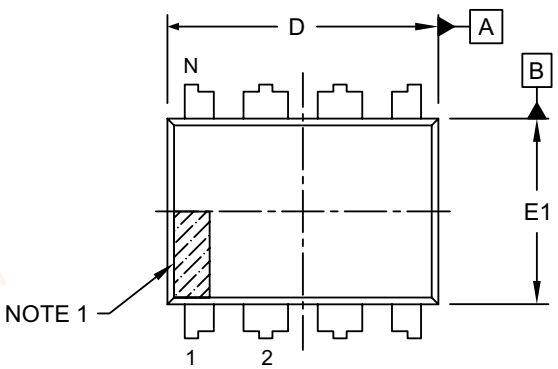

TOP VIEW

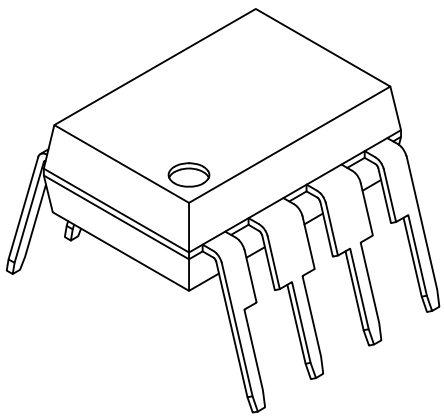

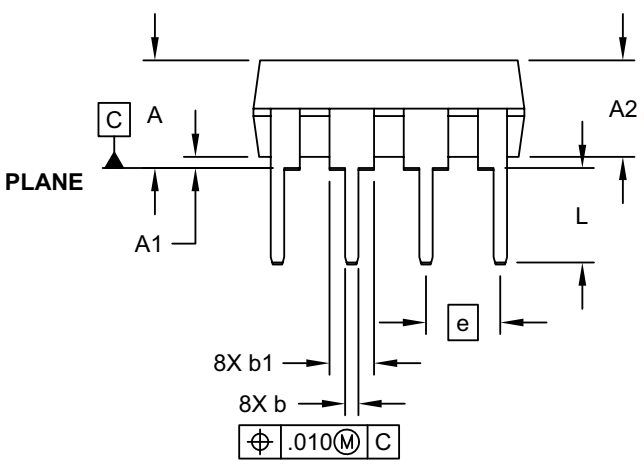

SIDE VIEW

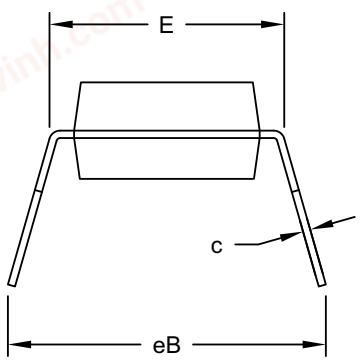

END VIEW

Microchip Technology Drawing No. C04-018-P Rev G Sheet 1 of 2

© 2002-2023 Microchip Technology Inc. and its subsidiaries

chanhvinh.com

8-Lead Plastic Dual In-Line (P) - 300 mil Body [PDIP]

Note: For the most current package drawings, please see the Microchip Packaging Specification located at http://www.microchip.com/packaging

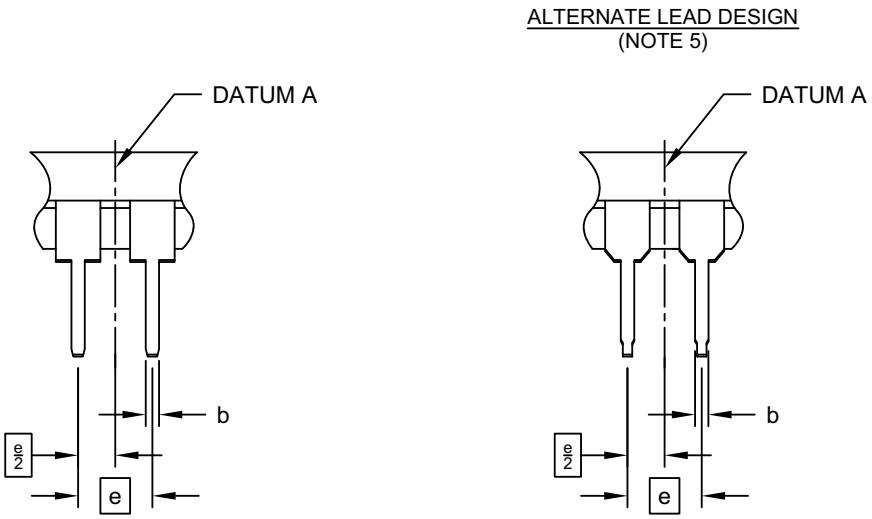

Units		INCHES		
Dimension Limits		MIN	NOM	MAX
Number of Pins	N		8	
Pitch	e		.100 BSC	
Top to Seating Plane	A	-	-	.210
Molded Package Thickness	A2	.115	.130	.195
Base to Seating Plane	A1	.015	-	-
Shoulder to Shoulder Width	E	.290	.310	.325
Molded Package Width	E1	.240	.250	.280
Overall Length	D	.348	.365	.400
Tip to Seating Plane	L	.115	.130	.150
Lead Thickness	c	.008	.010	.015
Upper Lead Width	b1	.040	.060	.070
Lower Lead Width	b	.014	.018	.022
Overall Row Spacing §	eB	-	-	.430

Notes:

1. Pin 1 visual index feature may vary, but must be located within the hatched area.
2. § Significant Characteristic
3. Dimensions D and E1 do not include mold flash or protrusions. Mold flash or protrusions shall not exceed .010" per side.
4. Dimensioning and tolerancing per ASME Y14.5M
   BSC: Basic Dimension. Theoretically exact value shown without tolerances.
5. Lead design above seating plane may vary, based on assembly vendor.

Microchip Technology Drawing No. C04-018-P Rev G Sheet 2 of 2

© 2002-2023 Microchip Technology Inc. and its subsidiaries

chanhvinh.com

8-Lead Plastic Small Outline (SN) - Narrow, 3.90 mm (.150 In.) Body [SOIC]

Note: For the most current package drawings, please see the Microchip Packaging Specification located at http://www.microchip.com/packaging

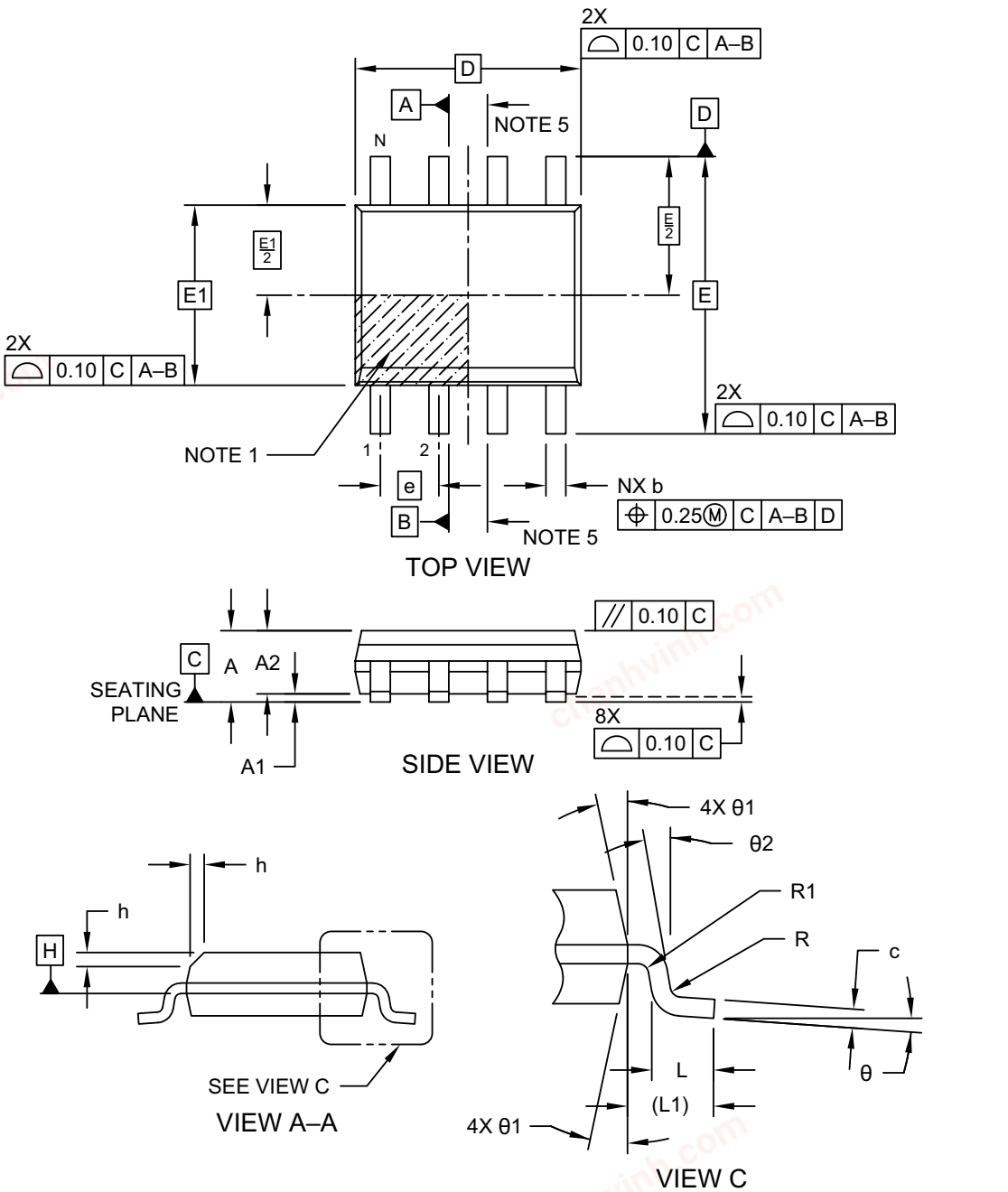

Microchip Technology Drawing No. C04-057-SN Rev K Sheet 1 of 2

chanhvinh.com

8-Lead Plastic Small Outline (SN) - Narrow, 3.90 mm (.150 In.) Body [SOIC]

Note: For the most current package drawings, please see the Microchip Packaging Specification located at http://www.microchip.com/packaging

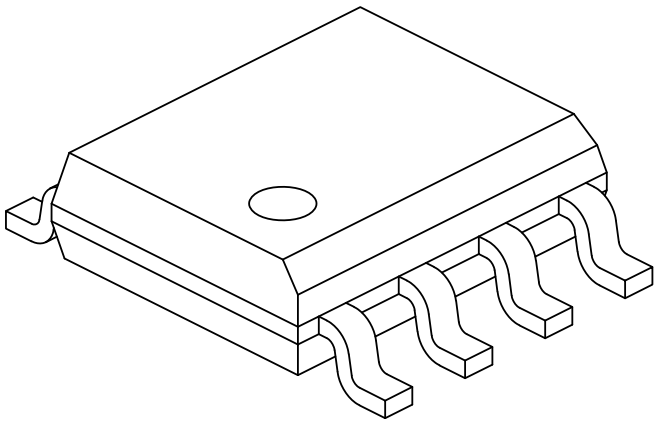

Units		MILLIMETERS		
Dimension Limits		MIN	NOM	MAX
Number of Pins	N		8	
Pitch	e		1.27 BSC	
Overall Height	A	–	–	1.75
Molded Package Thickness	A2	1.25	–	-
Standoff §	A1	0.10	–	0.25
Overall Width	E		6.00 BSC	
Molded Package Width	E1		3.90 BSC	
Overall Length	D		4.90 BSC	
Chamfer (Optional)	h	0.25	–	0.50
Foot Length	L	0.40	–	1.27
Footprint	L1		1.04 REF	
Lead Thickness	c	0.17	–	0.25
Lead Width	b	0.31	–	0.51
Lead Bend Radius	R	0.07	–	–
Lead Bend Radius	R1	0.07	–	–
Foot Angle	θ	0°	–	8°
Mold Draft Angle	θ1	5°	–	15°
Lead Angle	θ2	0°	–	–

Notes:

1. Pin 1 visual index feature may vary, but must be located within the hatched area.
2. § Significant Characteristic
3. Dimensions D and E1 do not include mold flash or protrusions. Mold flash or protrusions shall not exceed 0.15mm per side.
4. Dimensioning and tolerancing per ASME Y14.5M
   BSC: Basic Dimension. Theoretically exact value shown without tolerances.
   REF: Reference Dimension, usually without tolerance, for information purposes only.
5. Datums A & B to be determined at Datum H.

Microchip Technology Drawing No. C04-057-SN Rev K Sheet 2 of 2

© 2002-2023 Microchip Technology Inc. and its subsidiaries

chanhvinh.com

8-Lead Plastic Small Outline (SN) - Narrow, 3.90 mm (.150 In.) Body [SOIC]

Note: For the most current package drawings, please see the Microchip Packaging Specification located at http://www.microchip.com/packaging

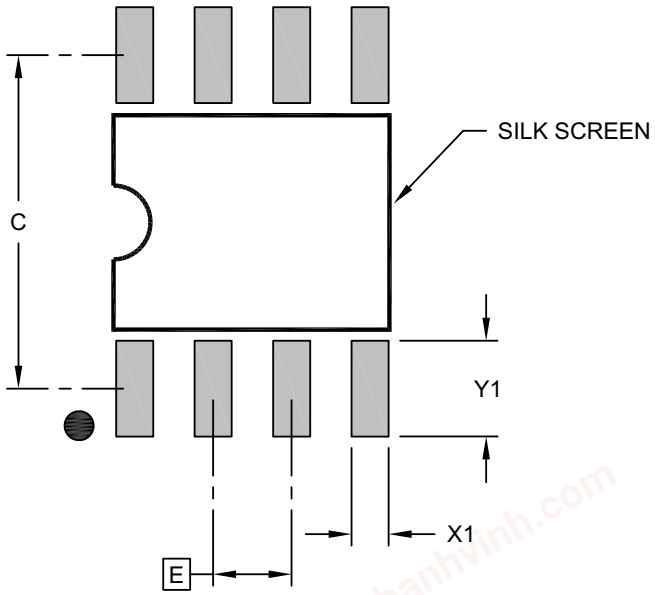

RECOMMENDED LAND PATTERN

Units		MILLIMETERS		
Dimension Limits		MIN	NOM	MAX
Contact Pitch	E		1.27 BSC	
Contact Pad Spacing	C		5.40	
Contact Pad Width (X8)	X1			0.60
Contact Pad Length (X8)	Y1			1.55

Notes:

1. Dimensioning and tolerancing per ASME Y14.5M
   BSC: Basic Dimension. Theoretically exact value shown without tolerances.

Microchip Technology Drawing C04-2057-SN Rev K

© 2002-2023 Microchip Technology Inc. and its subsidiaries

chanhvinh.com

8-Lead Plastic Small Outline (SM) - Medium, 5.28 mm (.208 Inch) Body [SOIJ]

Note: For the most current package drawings, please see the Microchip Packaging Specification located at http://www.microchip.com/packaging

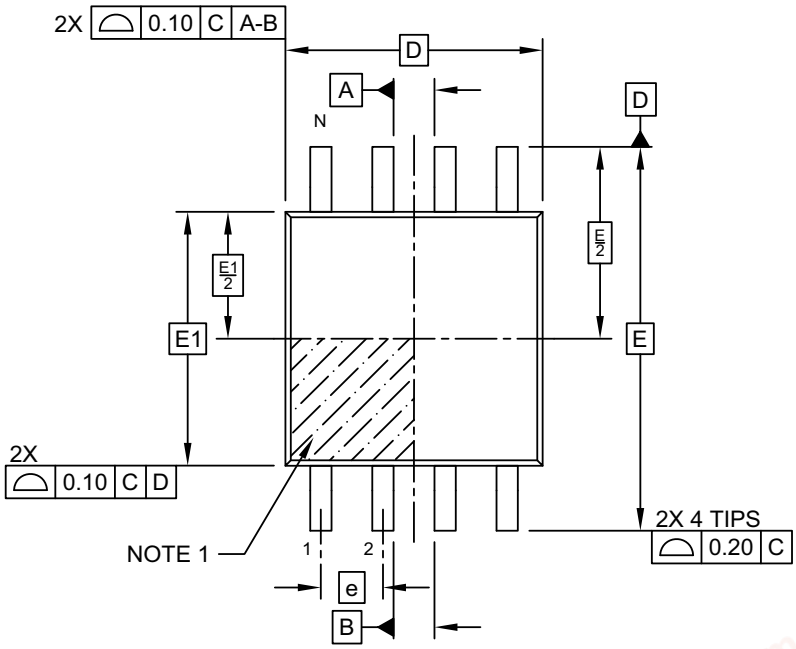

TOP VIEW

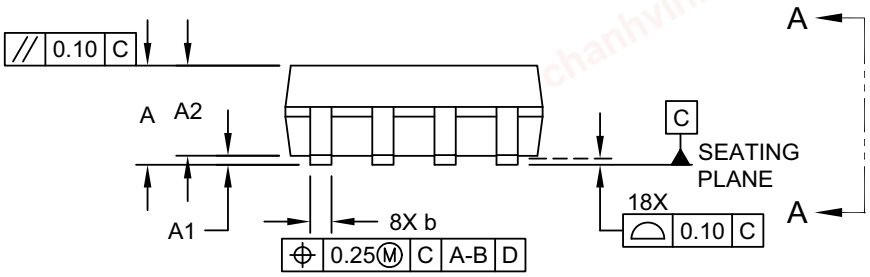

SIDE VIEW

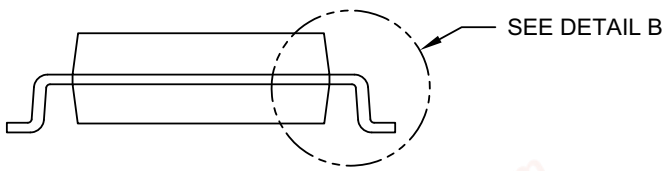

VIEW A–A

Microchip Technology Drawing C04-056 Rev E Sheet 1 of 2

© 2002-2023 Microchip Technology Inc. and its subsidiaries

chanhvinh.com

8-Lead Plastic Small Outline (SM) - Medium, 5.28 mm (.208 Inch) Body [SOIJ]

Note: For the most current package drawings, please see the Microchip Packaging Specification located at http://www.microchip.com/packaging

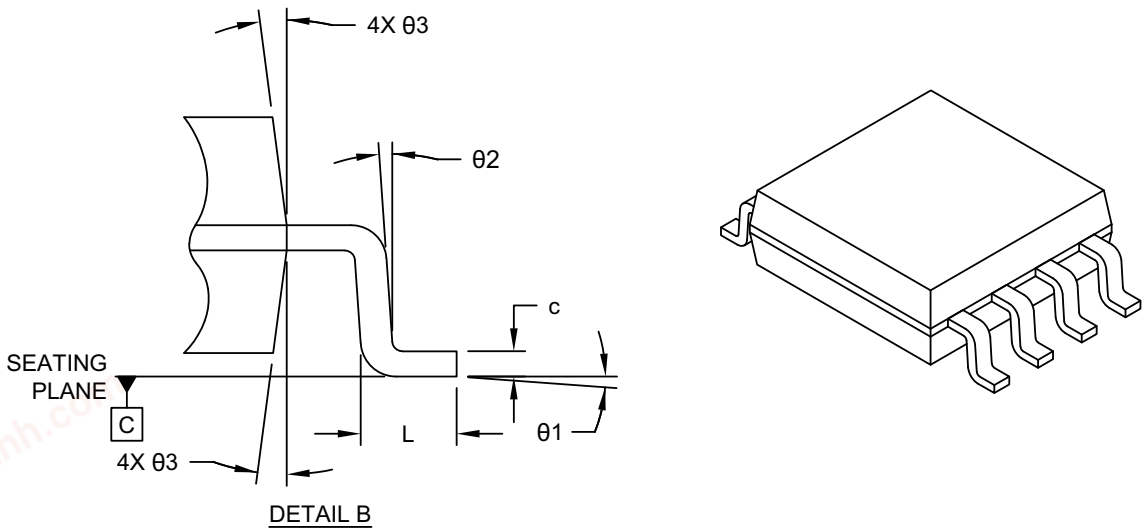

Units		MILLIMETERS		
Dimension Limits		MIN	NOM	MAX
Number of Terminals	N		8	
Pitch	e		1.27 BSC	
Overall Height	A	1.77	–	2.03
Standoff §	A1	0.05	–	0.25
Molded Package Thickness	A2	1.75	–	1.98
Overall Length	D		5.26 BSC	
Overall Width	E		7.94 BSC	
Molded Package Width	E1		5.25 BSC	
Terminal Width	b	0.36	–	0.51
Terminal Thickness	c	0.15	–	0.25
Terminal Length	L	0.51	–	0.76
Foot Angle	θ1	0°	–	8°
Lead Angle	θ2	0°	–	–
Mold Draft Angle	θ3	–	–	15°

Notes:

1. Pin 1 visual index feature may vary, but must be located within the hatched area.
2. SOIJ – JEITA/EIAJ Standard, Formerly called SOIC
3. § – Significant Characteristic
4. Dimensions D and E1 do not include mold flash or protrusions. Mold flash or protrusions shall not exceed 0.25mm per side.
5. Dimensioning and tolerancing per ASME Y14.5M
   BSC: Basic Dimension. Theoretically exact value shown without tolerances.
   REF: Reference Dimension, usually without tolerance, for information purposes only.

Microchip Technology Drawing C04-056 Rev E Sheet 2 of 2

© 2002-2023 Microchip Technology Inc. and its subsidiaries

chanhvinh.com

8-Lead Plastic Small Outline (SM) - Medium, 5.28 mm (.208 Inch) Body [SOIJ]

Note: For the most current package drawings, please see the Microchip Packaging Specification located at http://www.microchip.com/packaging

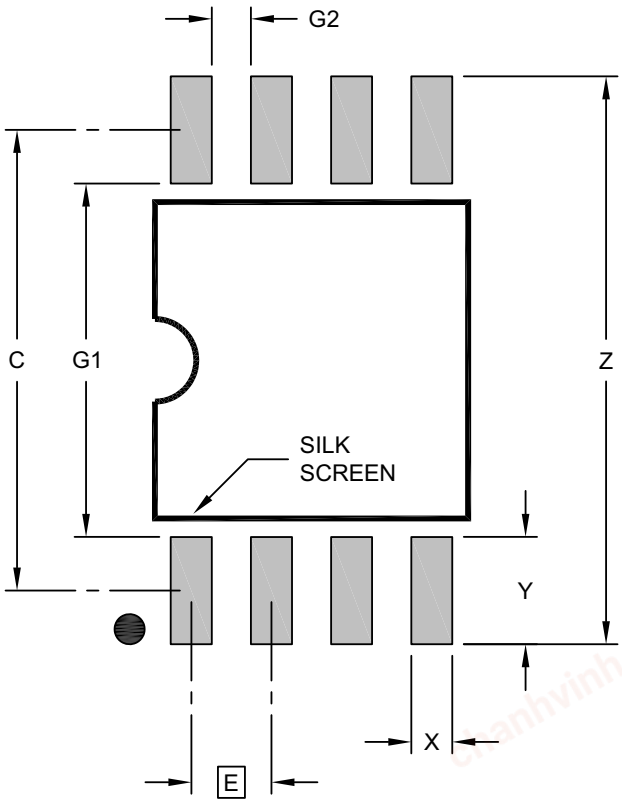

RECOMMENDED LAND PATTERN

Units		MILLIMETERS		
Dimension Limits		MIN	NOM	MAX
Contact Pitch	E		1.27 BSC	
Overall Width	Z			9.00
Contact Pad Spacing	C		7.30	
Contact Pad Width (X8)	X			0.65
Contact Pad Length (X8)	Y			1.70
Contact Pad to Contact Pad (X4)	G1	5.60		
Contact Pad to Contact Pad (X6)	G2	0.62		

Notes:

1. Dimensioning and tolerancing per ASME Y14.5M

BSC: Basic Dimension. Theoretically exact value shown without tolerances.

Microchip Technology Drawing C04-2056 Rev E

© 2002-2023 Microchip Technology Inc. and its subsidiaries

chanhvinh.com

5-Lead Plastic Small Outline Transistor (OT) [SOT-23]

Note: For the most current package drawings, please see the Microchip Packaging Specification located at http://www.microchip.com/packaging

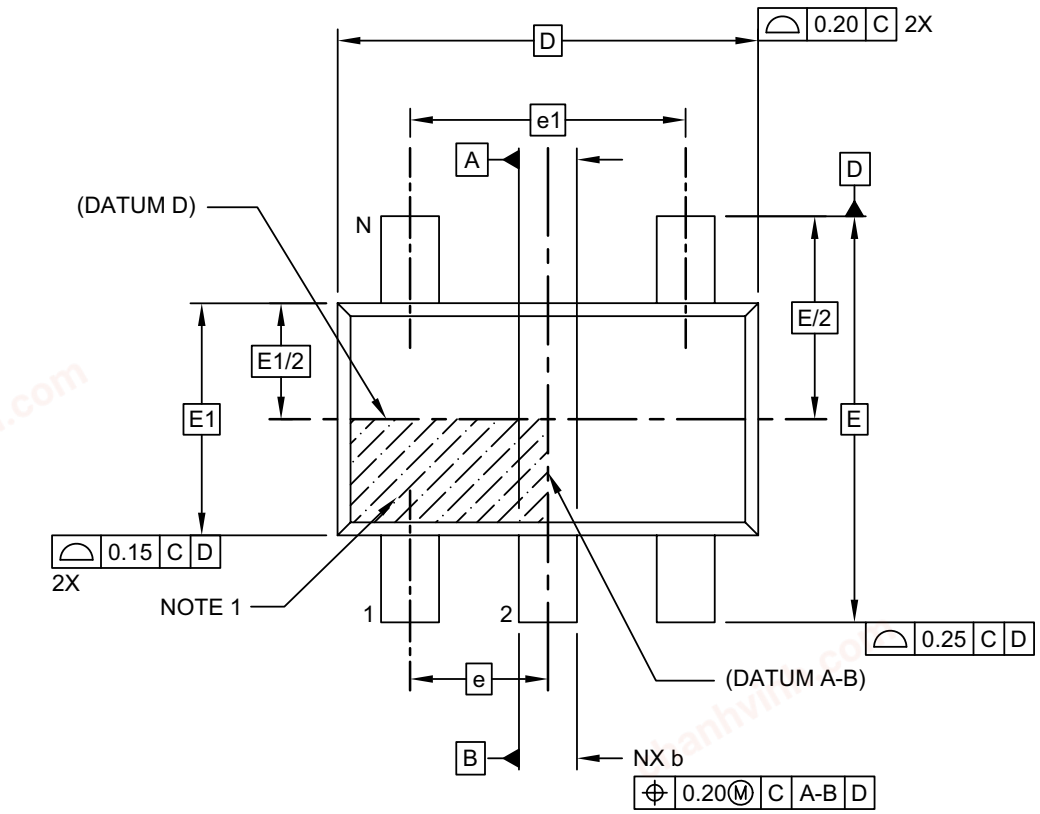

TOP VIEW

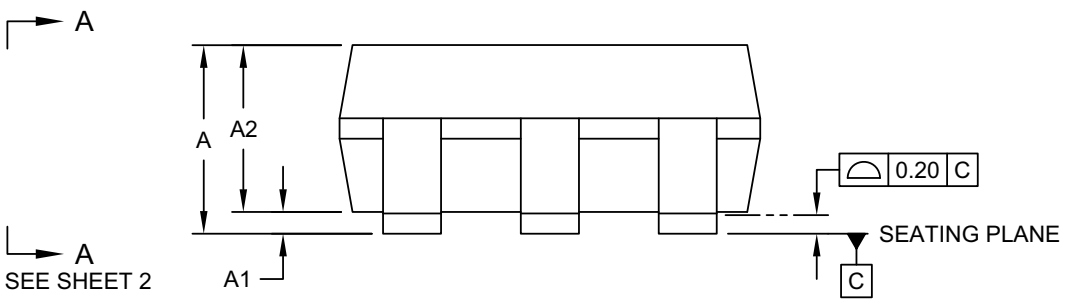

SIDE VIEW

Microchip Technology Drawing C04-091-OT Rev H Sheet 1 of 2

chanhvinh.com

5-Lead Plastic Small Outline Transistor (OT) [SOT-23]

Note: For the most current package drawings, please see the Microchip Packaging Specification located at http://www.microchip.com/packaging

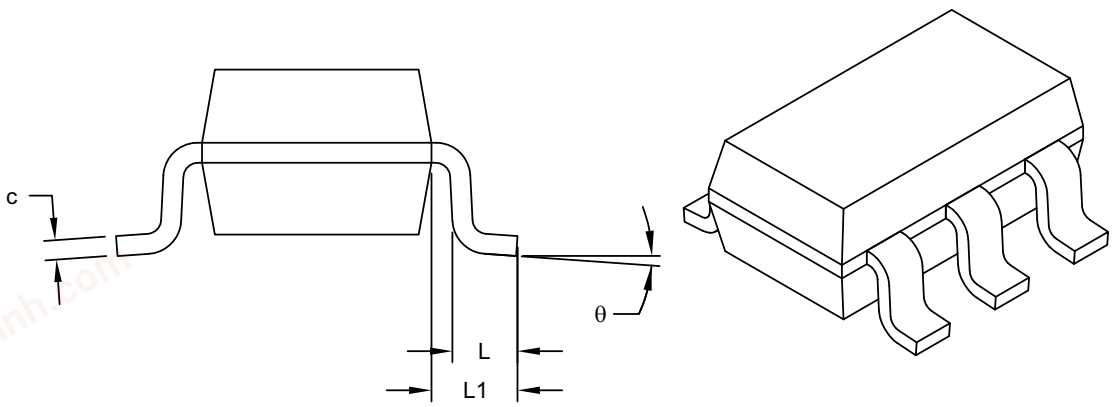

VIEW A-A
SHEET 1

Units		MILLIMETERS		
Dimension Limits		MIN	NOM	MAX
Number of Pins	N		5	
Pitch	e		0.95 BSC	
Outside lead pitch	e1		1.90 BSC	
Overall Height	A	0.90	-	1.45
Molded Package Thickness	A2	0.89	-	1.30
Standoff	A1	-	-	0.15
Overall Width	E		2.80 BSC	
Molded Package Width	E1		1.60 BSC	
Overall Length	D		2.90 BSC	
Foot Length	L	0.30	-	0.60
Footprint	L1		0.60 REF	
Foot Angle	θ	0°	-	10°
Lead Thickness	c	0.08	-	0.26
Lead Width	b	0.20	-	0.51

Notes:

1. Dimensions D and E1 do not include mold flash or protrusions. Mold flash or protrusions shall not exceed 0.25mm per side.
2. Dimensioning and tolerancing per ASME Y14.5M
   BSC: Basic Dimension. Theoretically exact value shown without tolerances.
   REF: Reference Dimension, usually without tolerance, for information purposes only.

Microchip Technology Drawing C04-091-OT Rev H Sheet 2 of 2

© 2002-2023 Microchip Technology Inc. and its subsidiaries

chanhvinh.com

5-Lead Plastic Small Outline Transistor (OT) [SOT-23]

Note: For the most current package drawings, please see the Microchip Packaging Specification located at http://www.microchip.com/packaging

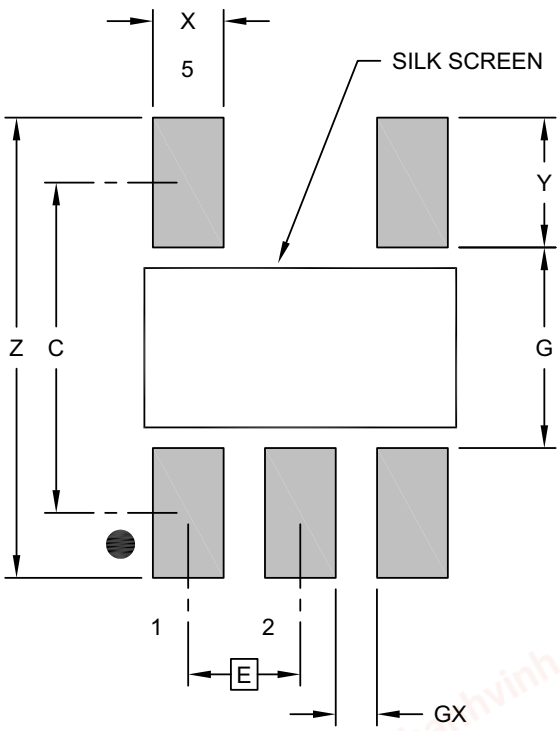

RECOMMENDED LAND PATTERN

Units		MILLIMETERS		
Dimension Limits		MIN	NOM	MAX
Contact Pitch	E	0.95 BSC		
Contact Pad Spacing	C		2.80	
Contact Pad Width (X5)	X			0.60
Contact Pad Length (X5)	Y			1.10
Distance Between Pads	G	1.70		
Distance Between Pads	GX	0.35		
Overall Width	Z			3.90

Notes:

1. Dimensioning and tolerancing per ASME Y14.5M

BSC: Basic Dimension. Theoretically exact value shown without tolerances.

Microchip Technology Drawing No. C04-2091-OT Rev H

© 2002-2023 Microchip Technology Inc. and its subsidiaries

chanhvinh.com

8-Lead Plastic Dual Flat, No Lead Package (MN) – 2x3x0.8 mm Body [TDFN]
With 1.4x1.3 mm Exposed Pad (JEDEC Package type WDFN)

Note:	For the most current package drawings, please see the Microchip Packaging Specification located at http://www.microchip.com/packaging

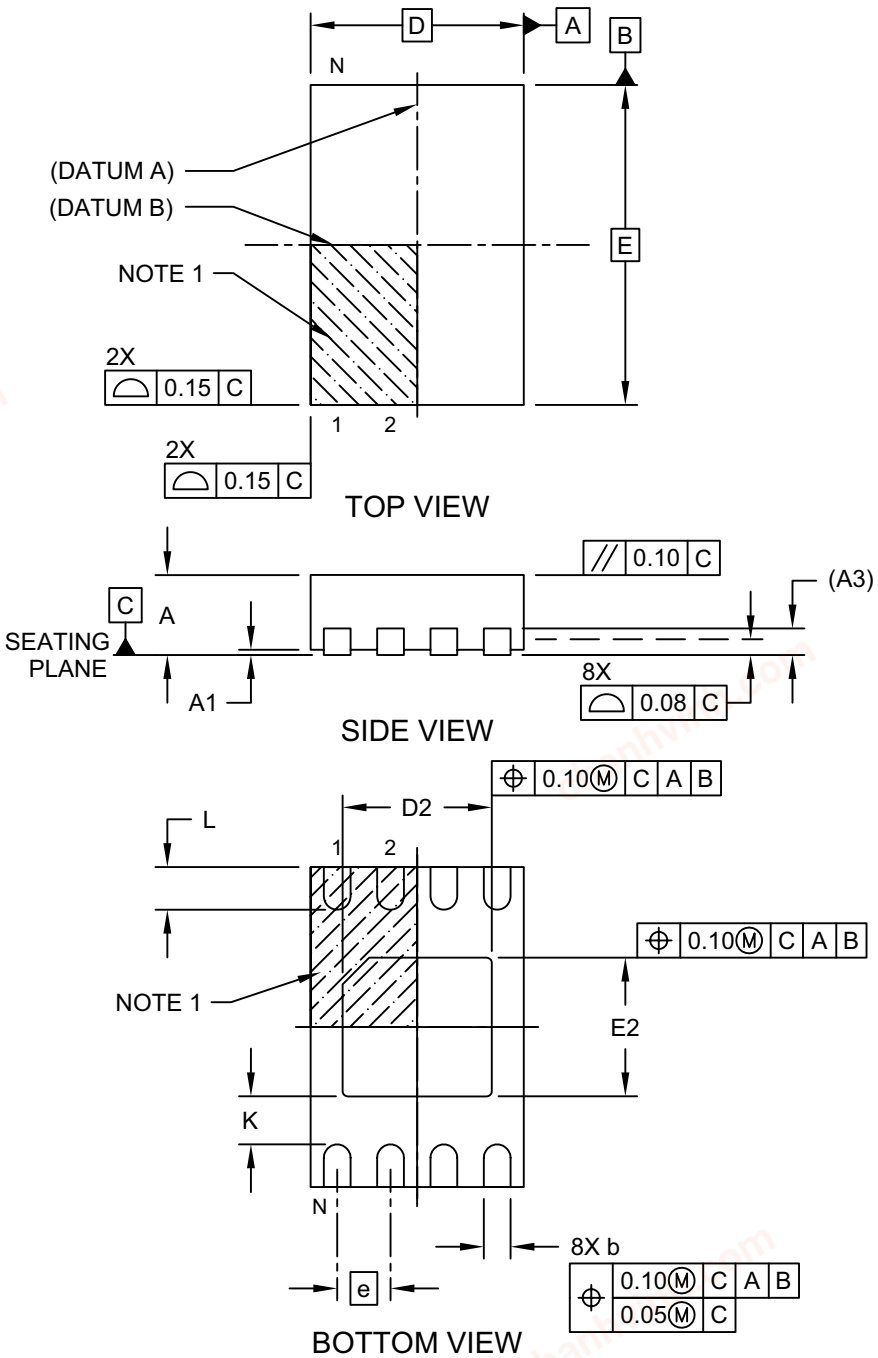

Microchip Technology Drawing No. C04-129-MN Rev E Sheet 1 of 2

© 2002-2023 Microchip Technology Inc. and its subsidiaries

chanhvinh.com

8-Lead Plastic Dual Flat, No Lead Package (MN) – 2x3x0.8 mm Body [TDFN] With 1.4x1.3 mm Exposed Pad (JEDEC Package type WDFN)

Note: For the most current package drawings, please see the Microchip Packaging Specification located at http://www.microchip.com/packaging

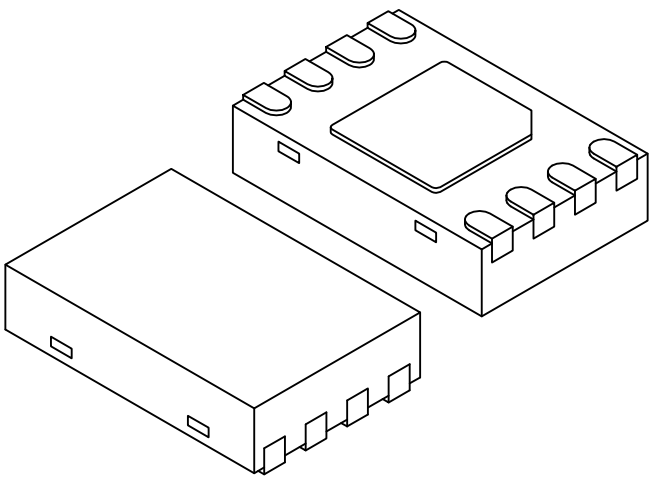

Units		MILLIMETERS		
Dimension Limits		MIN	NOM	MAX
Number of Pins	N		8	
Pitch	e		0.50 BSC	
Overall Height	A	0.70	0.75	0.80
Standoff	A1	0.00	0.02	0.05
Contact Thickness	A3		0.20 REF	
Overall Length	D		2.00 BSC	
Overall Width	E		3.00 BSC	
Exposed Pad Length	D2	1.35	1.40	1.45
Exposed Pad Width	E2	1.25	1.30	1.35
Contact Width	b	0.20	0.25	0.30
Contact Length	L	0.25	0.30	0.45
Contact-to-Exposed Pad	K	0.20	-	-

Notes:

1. Pin 1 visual index feature may vary, but must be located within the hatched area.
2. Package may have one or more exposed tie bars at ends.
3. Package is saw singulated
4. Dimensioning and tolerancing per ASME Y14.5M

BSC: Basic Dimension. Theoretically exact value shown without tolerances.
REF: Reference Dimension, usually without tolerance, for information purposes only.

Microchip Technology Drawing No. C04-129-MN Rev E Sheet 2 of 2

© 2002-2023 Microchip Technology Inc. and its subsidiaries

chanhvinh.com

8-Lead Plastic Dual Flat, No Lead Package (MN) – 2x3x0.8 mm Body [TDFN] With 1.4x1.3 mm Exposed Pad (JEDEC Package type WDFN)

Note: For the most current package drawings, please see the Microchip Packaging Specification located at http://www.microchip.com/packaging

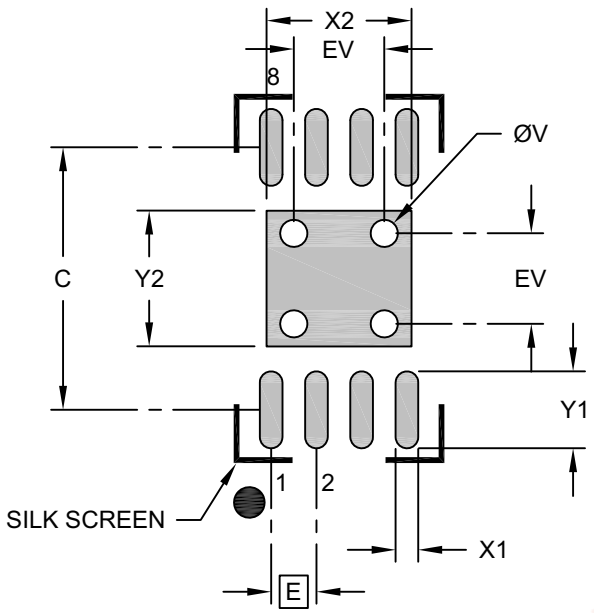

RECOMMENDED LAND PATTERN

Units		MILLIMETERS		
Dimension Limits		MIN	NOM	MAX
Contact Pitch	E		0.50 BSC	
Optional Center Pad Width	X2			1.60
Optional Center Pad Length	Y2			1.50
Contact Pad Spacing	C		2.90	
Contact Pad Width (X8)	X1			0.25
Contact Pad Length (X8)	Y1			0.85
Thermal Via Diameter	V		0.30	
Thermal Via Pitch	EV		1.00	

Notes:

1. Dimensioning and tolerancing per ASME Y14.5M
   BSC: Basic Dimension. Theoretically exact value shown without tolerances.
2. For best soldering results, thermal vias, if used, should be filled or tented to avoid solder loss during reflow process

Microchip Technology Drawing No. C04-129-MN Rev. B

© 2002-2023 Microchip Technology Inc. and its subsidiaries

chanhvinh.com

8-Lead Plastic Thin Shrink Small Outline (ST) - 4.4 mm Body [TSSOP]

Note: For the most current package drawings, please see the Microchip Packaging Specification located at http://www.microchip.com/packaging

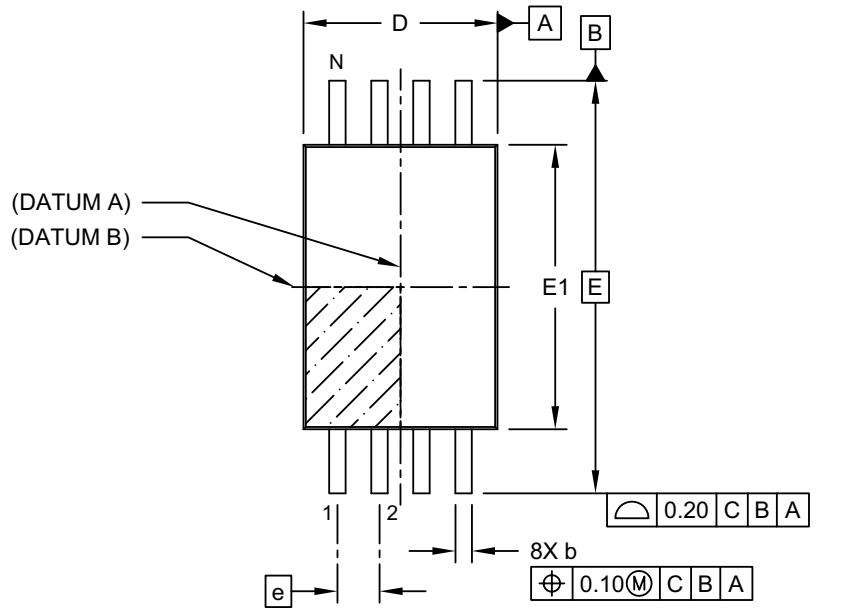

TOP VIEW

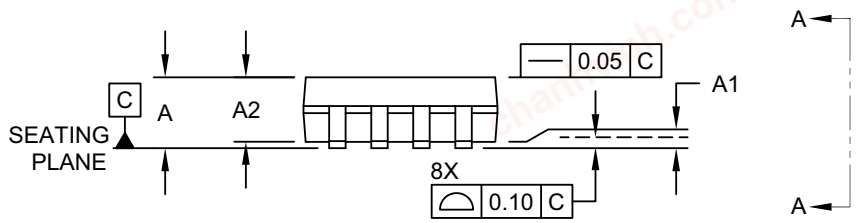

SIDE VIEW

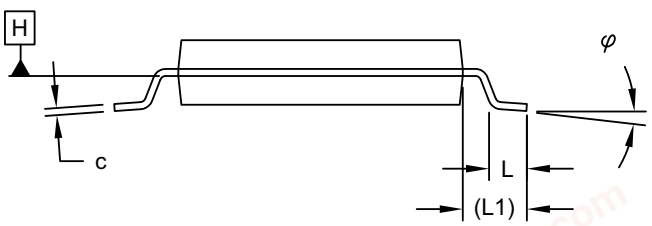

VIEW A-A

Microchip Technology Drawing C04-086 Rev C Sheet 1 of 2

© 2002-2023 Microchip Technology Inc. and its subsidiaries

chanhvinh.com

8-Lead Plastic Thin Shrink Small Outline (ST) - 4.4 mm Body [TSSOP]

Note: For the most current package drawings, please see the Microchip Packaging Specification located at http://www.microchip.com/packaging

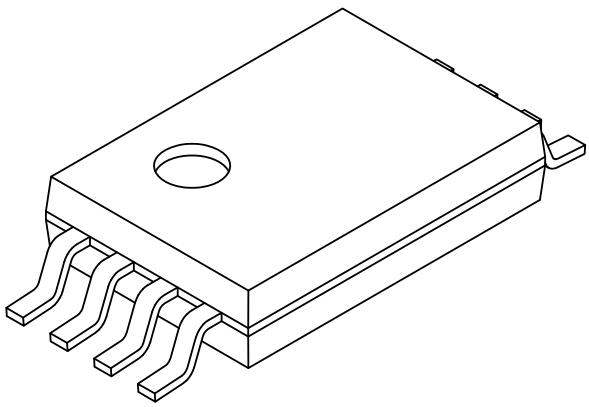

Units		MILLIMETERS		
Dimension Limits		MIN	NOM	MAX
Number of Pins	N		8	
Pitch	e		0.65 BSC	
Overall Height	A	-	-	1.20
Molded Package Thickness	A2	0.80	1.00	1.05
Standoff	A1	0.05	-	-
Overall Width	E		6.40 BSC	
Molded Package Width	E1	4.30	4.40	4.50
Overall Length	D	2.90	3.00	3.10
Foot Length	L	0.45	0.60	0.75
Footprint	L1		1.00 REF	
Lead Thickness	c	0.09	-	0.25
Foot Angle	φ	0°	4°	8°
Lead Width	b	0.19	-	0.30

Notes:

1. Pin 1 visual index feature may vary, but must be located within the hatched area.
2. Dimensions D and E1 do not include mold flash or protrusions. Mold flash or protrusions shall not exceed 0.20mm per side.
3. Dimensioning and tolerancing per ASME Y14.5M

BSC: Basic Dimension. Theoretically exact value shown without tolerances.

REF: Reference Dimension, usually without tolerance, for information purposes only.

Microchip Technology Drawing C04-086 Rev C Sheet 2 of 2

© 2002-2023 Microchip Technology Inc. and its subsidiaries

chanhvinh.com

8-Lead Plastic Thin Shrink Small Outline (ST) - 4.4 mm Body [TSSOP]

Note: For the most current package drawings, please see the Microchip Packaging Specification located at http://www.microchip.com/packaging

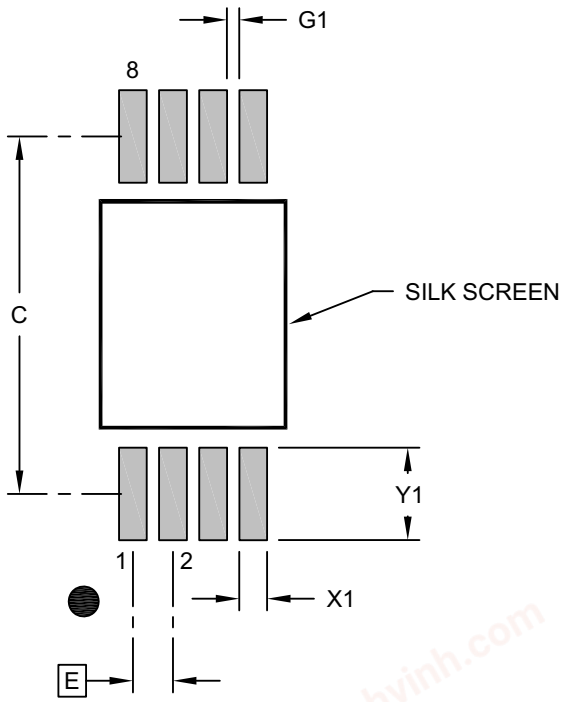

RECOMMENDED LAND PATTERN

Units		MILLIMETERS		
Dimension Limits		MIN	NOM	MAX
Contact Pitch	E	0.65 BSC		
Contact Pad Spacing	C		5.80	
Contact Pad Width (X8)	X1			0.45
Contact Pad Length (X8)	Y1			1.50
Contact Pad to Center Pad (X6)	G1	0.20		

Notes:

1. Dimensioning and tolerancing per ASME Y14.5M
   BSC: Basic Dimension. Theoretically exact value shown without tolerances.
2. For best soldering results, thermal vias, if used, should be filled or tented to avoid solder loss during reflow process

Microchip Technology Drawing C04-2086 Rev B

© 2002-2023 Microchip Technology Inc. and its subsidiaries

chanhvinh.com

APPENDIX A: REVISION HISTORY

Revision P (11/2023)

Corrected package offerings in the “Automotive Product Identification System” section; Minor formatting changes.

Revision N (11/2021)

Updated formatting to current template; Replaced terminology “Master” and “Slave” with “Host” and “Client” respectively; Removed CSP product offering; Added Automotive Product Identification System; Updated DFN, PDIP, SOIC, SOT-23, TDFN and TSSOP package drawings.

Revision M (02/2012)

Corrected CS package drawing aspect ratio; Revised Product ID System.

Revision L (03/2010)

Added X-Rotated TSSOP package; Updated Package Drawings.

Revision K (12/2009)

Added Chip Scale Package.

Revision J (02/2009)

Added TDFN and SOT-23 packages; Updated Package Drawings; Moved Pin Descriptions to Section 2.0; Renumbered Sections.

Revision H (02/2007)

Changed 1.8V to 1.7V; Revised Features Section; Replaced Package Drawings; Deleted Rotated TSSOP; Revised Product ID Section.

Revision G (07/2006)

Replaced 2x3 DFN (MC) Package.

Revision F (08/2005)

Revised Sections 4.3, 7.2 and 7.4.

Revision E (03/2005)

Added DFN package.

Revision D (12/2003)

Corrections to Section 1.0, Electrical Characteristics.

© 2002-2023 Microchip Technology Inc. and its subsidiaries

chanhvinh.com

THE MICROCHIP WEBSITE

Microchip provides online support via our website at https://www.microchip.com. This website is used to make files and information easily available to customers. Some of the available content includes:

- **Product Support** – Data sheets and errata, application notes and sample programs, design resources, user's guides and hardware support documents, the latest software releases and archived software
- **General Technical Support** – Frequently Asked Questions (FAQs), technical support requests, online discussion groups and a Microchip design partner program member listing
- **Business of Microchip** – Product selector and ordering guides, the latest Microchip press releases, a listing of seminars and events, listings of Microchip sales offices, distributors and factory representatives

PRODUCT CHANGE NOTIFICATION SERVICE

Microchip's product change notification service helps keep customers current on Microchip products. Subscribers will receive email notifications whenever there are changes, updates, revisions or errata related to a specified product family or development tool of interest.

To register, go to https://www.microchip.com/pcn and follow the registration instructions.

CUSTOMER SUPPORT

Users of Microchip products can receive assistance through several channels:

- Distributor or Representative
- Local Sales Office
- Embedded Solutions Engineer (ESE)
- Technical Support

Customers should contact their distributor, representative or ESE for support. Local sales offices are also available to help customers. A listing of sales offices and locations is included in this document.

Technical support is available through the website at: https://www.microchip.com/support

© 2002-2023 Microchip Technology Inc. and its subsidiaries

chanhvinh.com

PRODUCT IDENTIFICATION SYSTEM (NON-AUTOMOTIVE)

To order or obtain information, e.g., on pricing or delivery, refer to the factory or the listed sales office.

PART NO.	[X](1)	-X	/XX
Device	Tape and Reel Option	Temperature Range	Package

Device:	24AA32A	=	1.7V, 32-Kbit, I^2C Serial EEPROM
	24AA32AX	=	1.7V, 32-Kbit, I^2C Serial EEPROM in alternate pinout (ST only)
	24LC32A	=	2.5V, 32-Kbit, I^2C Serial EEPROM
	24LC32AX	=	2.5V, 32-Kbit, I^2C Serial EEPROM in alternate pinout (ST only)
Tape and Reel Option:	Blank	=	Standard packaging (tube or tray)
	T	=	Tape and Reel(1)
Temperature Range:	I	=	-40°C to +85°C (Industrial)
	E	=	-40°C to +125°C (Extended)
Package:	MC	=	Plastic Dual Flat, No Lead Package – 2x3x1.0 mm Body, 8-Lead (DFN) (Tape and Reel only)
	MS	=	Plastic Micro Small Outline Package, 8-Lead (MSOP)
	P	=	Plastic Dual In-Line – 300 mil Body, 8-Lead (PDIP)
	SN	=	Plastic Small Outline - Narrow, 3.90 mm Body, 8-Lead (SOIC)
	SM	=	Plastic Small Outline – Medium, 5.28 mm Body, 8-Lead (SOIJ)
	OT	=	Plastic Small Outline Transistor, 5-Lead (SOT-23) (Tape and Reel only)
	MNY	=	Plastic Dual Flat, No Lead Package - 2x3x0.8 mm Body, 8-Lead (TDFN) (Tape and Reel only)
	ST	=	Plastic Thin Shrink Small Outline – 4.4 mm, 8-Lead (TSSOP)

Examples:

a) 24AA32A-I/P: Industrial Temperature, 1.7V, PDIP package.

b) 24AA32A-I/SN: Industrial Temperature, 1.7V, SOIC package.

c) 24AA32A-I/SM: Industrial Temperature, 1.7V, SOIJ package.

d) 24AA32A-I/ST: Industrial Temperature, 1.7V, TSSOP package.

e) 24LC32A-I/P: Industrial Temperature, 2.5V, PDIP package.

f) 24LC32A-E/SN: Extended Temperature, 2.5V, SOIC package.

g) 24LC32A-E/SM: Extended Temperature, 2.5V, SOIJ package.

h) 24LC32AT-I/ST: Tape and Reel, Industrial Temperature, 2.5V, TSSOP package.

Note 1: Tape and Reel identifier only appears in the catalog part number description. This identifier is used for ordering purposes and is not printed on the device package. Check with your Microchip Sales Office for package availability with the Tape and Reel option.

© 2002-2023 Microchip Technology Inc. and its subsidiaries

chanhvinh.com

PRODUCT IDENTIFICATION SYSTEM (AUTOMOTIVE)

To order or obtain information, e.g., on pricing or delivery, refer to the factory or the listed sales office.

PART NO.	[X](1)	X	/XX	XXX(2, 3)
Device	Tape and Reel Option	Temperature Range	Package	Variant

Device:	24AA32A =	1.7V, 32-Kbit, I^2C Serial EEPROM	
	24LC32A =	2.5V, 32-Kbit, I^2C Serial EEPROM	
Tape and Reel Option:	Blank =	Standard packaging (tube or tray)	
	T =	Tape and Reel(1)	
Temperature Range:	I =	-40°C to +85°C (AEC-Q100 Grade 3)	
	E =	-40°C to +125°C (AEC-Q100 Grade 1)	
Package:	MS =	Plastic Micro Small Outline Package, 8-Lead (MSOP)	
	SN =	Plastic Small Outline – Narrow, 3.90 mm Body, 8-Lead (SOIC)	
	OT =	Plastic Small Outline Transistor, 5-Lead (SOT-23) (Tape and Reel only)	
	ST =	Plastic Thin Shrink Small Outline – 4.4 mm, 8-Lead (TSSOP)	
Variant(2,3):	15KVAO =	Standard Automotive, 15K Process(4)	
	15KVXX =	Customer-Specific Automotive, 15K Process(4)	
	16KVAO =	Standard Automotive, 16K Process	
	16KVXX =	Customer-Specific Automotive, 16K Process	

Examples:

a) 24AA32AT-I/SN16KVAO: Tape and Reel, Automotive Grade 3, 1.7V, SOIC Package.

b) 24AA32AT-E/ST16KVAO: Tape and Reel, Automotive Grade 1, 1.7V, TSSOP Package.

c) 24LC32AT-E/MS16KVAO: Tape and Reel, Automotive Grade 1, 2.5V, MSOP Package.

d) 24LC32AT-E/OT16KVAO: Tape and Reel, Automotive Grade 1, 2.5V, SOT-23 Package.

Note 1: Tape and Reel identifier only appears in the catalog part number description. This identifier is used for ordering purposes and is not printed on the device package. Check with your Microchip Sales Office for package availability with the Tape and Reel option.

2: The VAO/VXX automotive variants have been designed, manufactured, tested and qualified in accordance with AEC-Q100 requirements for automotive applications.

3: For customers requesting a PPAP, a customer-specific part number will be generated and provided. A PPAP is not provided for VAO part numbers.

4: Not recommended for new designs.

© 2002-2023 Microchip Technology Inc. and its subsidiaries

chanhvinh.com

Note the following details of the code protection feature on Microchip products:

- Microchip products meet the specifications contained in their particular Microchip Data Sheet.
- Microchip believes that its family of products is secure when used in the intended manner, within operating specifications, and under normal conditions.
- Microchip values and aggressively protects its intellectual property rights. Attempts to breach the code protection features of Microchip product is strictly prohibited and may violate the Digital Millennium Copyright Act.
- Neither Microchip nor any other semiconductor manufacturer can guarantee the security of its code. Code protection does not mean that we are guaranteeing the product is "unbreakable" Code protection is constantly evolving. Microchip is committed to continuously improving the code protection features of our products.

This publication and the information herein may be used only with Microchip products, including to design, test, and integrate Microchip products with your application. Use of this information in any other manner violates these terms. Information regarding device applications is provided only for your convenience and may be superseded by updates. It is your responsibility to ensure that your application meets with your specifications. Contact your local Microchip sales office for additional support or, obtain additional support at https://www.microchip.com/en-us/support/design-help/client-support-services.

THIS INFORMATION IS PROVIDED BY MICROCHIP "AS IS". MICROCHIP MAKES NO REPRESENTATIONS OR WARRANTIES OF ANY KIND WHETHER EXPRESS OR IMPLIED, WRITTEN OR ORAL, STATUTORY OR OTHERWISE, RELATED TO THE INFORMATION INCLUDING BUT NOT LIMITED TO ANY IMPLIED WARRANTIES OF NON-INFRINGEMENT, MERCHANTABILITY, AND FITNESS FOR A PARTICULAR PURPOSE, OR WARRANTIES RELATED TO ITS CONDITION, QUALITY, OR PERFORMANCE.

IN NO EVENT WILL MICROCHIP BE LIABLE FOR ANY INDIRECT, SPECIAL, PUNITIVE, INCIDENTAL, OR CONSEQUENTIAL LOSS, DAMAGE, COST, OR EXPENSE OF ANY KIND WHATSOEVER RELATED TO THE INFORMATION OR ITS USE, HOWEVER CAUSED, EVEN IF MICROCHIP HAS BEEN ADVISED OF THE POSSIBILITY OR THE DAMAGES ARE FORESEEABLE. TO THE FULLEST EXTENT ALLOWED BY LAW, MICROCHIP'S TOTAL LIABILITY ON ALL CLAIMS IN ANY WAY RELATED TO THE INFORMATION OR ITS USE WILL NOT EXCEED THE AMOUNT OF FEES, IF ANY, THAT YOU HAVE PAID DIRECTLY TO MICROCHIP FOR THE INFORMATION.

Use of Microchip devices in life support and/or safety applications is entirely at the buyer's risk, and the buyer agrees to defend, indemnify and hold harmless Microchip from any and all damages, claims, suits, or expenses resulting from such use. No licenses are conveyed, implicitly or otherwise, under any Microchip intellectual property rights unless otherwise stated.

Trademarks

The Microchip name and logo, the Microchip logo, Adaptec, AVR, AVR logo, AVR Freaks, BesTime, BitCloud, CryptoMemory, CryptoRF, dsPIC, flexPWR, HELDO, IGLOO, JukeBlox, KeeLoq, Kleer, LANCheck, LinkMD, maXStylus, maXTouch, MediaLB, megaAVR, Microsemi, Microsemi logo, MOST, MOST logo, MPLAB, OptoLyzer, PIC, picoPower, PICSTART, PIC32 logo, PolarFire, Prochip Designer, QTouch, SAM-BA, SenGenuity, SpyNIC, SST, SST Logo, SuperFlash, Symmetricom, SyncServer, Tachyon, TimeSource, tinyAVR, UNI/O, Vectron, and XMEGA are registered trademarks of Microchip Technology Incorporated in the U.S.A. and other countries.

AgileSwitch, ClockWorks, The Embedded Control Solutions Company, EtherSynch, Flashtec, Hyper Speed Control, HyperLight Load, Libero, motorBench, mTouch, Powermite 3, Precision Edge, ProASIC, ProASIC Plus, ProASIC Plus logo, Quiet-Wire, SmartFusion, SyncWorld, TimeCesium, TimeHub, TimePictra, TimeProvider, and ZL are registered trademarks of Microchip Technology Incorporated in the U.S.A.

Adjacent Key Suppression, AKS, Analog-for-the-Digital Age, Any Capacitor, AnyIn, AnyOut, Augmented Switching, BlueSky, BodyCom, Clockstudio, CodeGuard, CryptoAuthentication, CryptoAutomotive, CryptoCompanion, CryptoController, dsPICDEM, dsPICDEM.net, Dynamic Average Matching, DAM, ECAN, Espresso T1S, EtherGREEN, EyeOpen, GridTime, IdealBridge, IGaT, In-Circuit Serial Programming, ICSP, INICnet, Intelligent Paralleling, IntelliMOS, Inter-Chip Connectivity, JitterBlocker, Knob-on-Display, MarginLink, maxCrypto, maxView, memBrain, Mindi, MiWi, MPASM, MPF, MPLAB Certified logo, MPLIB, MPLINK, mSiC, MultiTRAK, NetDetach, Omniscient Code Generation, PICDEM, PICDEM.net, PICkit, PICtail, Power MOS IV, Power MOS 7, PowerSmart, PureSilicon, QMatrix, REAL ICE, Ripple Blocker, RTAX, RTG4, SAM-ICE, Serial Quad I/O, simpleMAP, SimpliPHY, SmartBuffer, SmartHLS, SMART-I.S., storClad, SQI, SuperSwitcher, SuperSwitcher II, Switchtec, SynchroPHY, Total Endurance, Trusted Time, TSHARC, Turing, USBCheck, VariSense, VectorBlox, VeriPHY, ViewSpan, WiperLock, XpressConnect, and ZENA are trademarks of Microchip Technology Incorporated in the U.S.A. and other countries.

SQTP is a service mark of Microchip Technology Incorporated in the U.S.A.

The Adaptec logo, Frequency on Demand, Silicon Storage Technology, and Symmcom are registered trademarks of Microchip Technology Inc. in other countries.

GestIC is a registered trademark of Microchip Technology Germany II GmbH & Co. KG, a subsidiary of Microchip Technology Inc., in other countries.

All other trademarks mentioned herein are property of their respective companies.
© 2023, Microchip Technology Incorporated and its subsidiaries.

All Rights Reserved.

ISBN: 978-1-6683-3458-4

For information regarding Microchip's Quality Management Systems, please visit www.microchip.com/quality.

© 2002-2023 Microchip Technology Inc. and its subsidiaries

chanhvinh.com

Worldwide Sales and Service

AMERICAS

Corporate Office
2355 West Chandler Blvd.
Chandler, AZ 85224-6199
Tel: 480-792-7200
Fax: 480-792-7277
Technical Support:
http://www.microchip.com/support
Web Address:
www.microchip.com

Atlanta
Duluth, GA
Tel: 678-957-9614
Fax: 678-957-1455

Austin, TX
Tel: 512-257-3370

Boston
Westborough, MA
Tel: 774-760-0087
Fax: 774-760-0088

Chicago
Itasca, IL
Tel: 630-285-0071
Fax: 630-285-0075

Dallas
Addison, TX
Tel: 972-818-7423
Fax: 972-818-2924

Detroit
Novi, MI
Tel: 248-848-4000

Houston, TX
Tel: 281-894-5983

Indianapolis
Noblesville, IN
Tel: 317-773-8323
Fax: 317-773-5453
Tel: 317-536-2380

Los Angeles
Mission Viejo, CA
Tel: 949-462-9523
Fax: 949-462-9608
Tel: 951-273-7800

Raleigh, NC
Tel: 919-844-7510

New York, NY
Tel: 631-435-6000

San Jose, CA
Tel: 408-735-9110
Tel: 408-436-4270

Canada - Toronto
Tel: 905-695-1980
Fax: 905-695-2078

ASIA/PACIFIC

Australia - Sydney
Tel: 61-2-9868-6733

China - Beijing
Tel: 86-10-8569-7000

China - Chengdu
Tel: 86-28-8665-5511

China - Chongqing
Tel: 86-23-8980-9588

China - Dongguan
Tel: 86-769-8702-9880

China - Guangzhou
Tel: 86-20-8755-8029

China - Hangzhou
Tel: 86-571-8792-8115

China - Hong Kong SAR
Tel: 852-2943-5100

China - Nanjing
Tel: 86-25-8473-2460

China - Qingdao
Tel: 86-532-8502-7355

China - Shanghai
Tel: 86-21-3326-8000

China - Shenyang
Tel: 86-24-2334-2829

China - Shenzhen
Tel: 86-755-8864-2200

China - Suzhou
Tel: 86-186-6233-1526

China - Wuhan
Tel: 86-27-5980-5300

China - Xian
Tel: 86-29-8833-7252

China - Xiamen
Tel: 86-592-2388138

China - Zhuhai
Tel: 86-756-3210040

ASIA/PACIFIC

India - Bangalore
Tel: 91-80-3090-4444

India - New Delhi
Tel: 91-11-4160-8631

India - Pune
Tel: 91-20-4121-0141

Japan - Osaka
Tel: 81-6-6152-7160

Japan - Tokyo
Tel: 81-3-6880- 3770

Korea - Daegu
Tel: 82-53-744-4301

Korea - Seoul
Tel: 82-2-554-7200

Malaysia - Kuala Lumpur
Tel: 60-3-7651-7906

Malaysia - Penang
Tel: 60-4-227-8870

Philippines - Manila
Tel: 63-2-634-9065

Singapore
Tel: 65-6334-8870

Taiwan - Hsin Chu
Tel: 886-3-577-8366

Taiwan - Kaohsiung
Tel: 886-7-213-7830

Taiwan - Taipei
Tel: 886-2-2508-8600

Thailand - Bangkok
Tel: 66-2-694-1351

Vietnam - Ho Chi Minh
Tel: 84-28-5448-2100

EUROPE

Austria - Wels
Tel: 43-7242-2244-39
Fax: 43-7242-2244-393

Denmark - Copenhagen
Tel: 45-4485-5910
Fax: 45-4485-2829

Finland - Espoo
Tel: 358-9-4520-820

France - Paris
Tel: 33-1-69-53-63-20
Fax: 33-1-69-30-90-79

Germany - Garching
Tel: 49-8931-9700

Germany - Haan
Tel: 49-2129-3766400

Germany - Heilbronn
Tel: 49-7131-72400

Germany - Karlsruhe
Tel: 49-721-625370

Germany - Munich
Tel: 49-89-627-144-0
Fax: 49-89-627-144-44

Germany - Rosenheim
Tel: 49-8031-354-560

Israel - Ra'anana
Tel: 972-9-744-7705

Italy - Milan
Tel: 39-0331-742611
Fax: 39-0331-466781

Italy - Padova
Tel: 39-049-7625286

Netherlands - Drunen
Tel: 31-416-690399
Fax: 31-416-690340

Norway - Trondheim
Tel: 47-7288-4388

Poland - Warsaw
Tel: 48-22-3325737

Romania - Bucharest
Tel: 40-21-407-87-50

Spain - Madrid
Tel: 34-91-708-08-90
Fax: 34-91-708-08-91

Sweden - Gothenberg
Tel: 46-31-704-60-40

Sweden - Stockholm
Tel: 46-8-5090-4654

UK - Wokingham
Tel: 44-118-921-5800
Fax: 44-118-921-5820

© 2002-2023 Microchip Technology Inc. and its subsidiaries