chanhvinh.com

P | Cabling

Data sheet

Connection cable M12 angled 4-pole D-coded 5.0 m

P/N 142M1D90050

EAN 4250184174950

2015-24-08

Illustrations

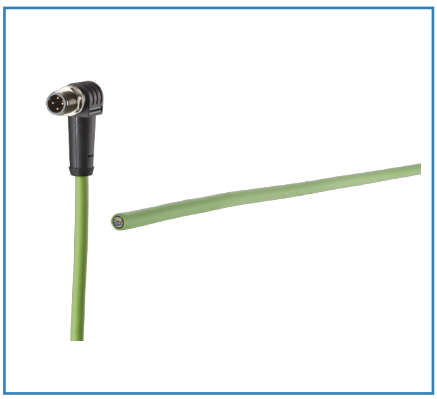

Dimensional drawing

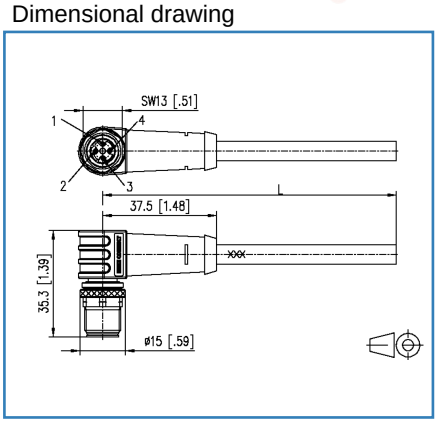

Wiring

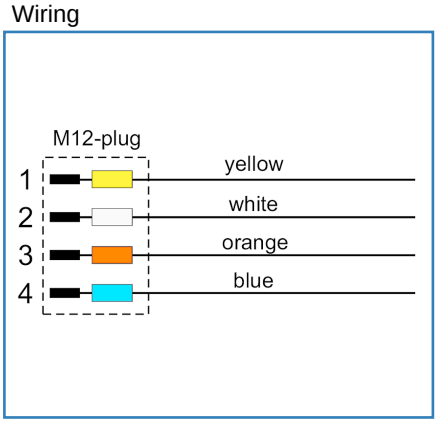

See enlarged drawings at the end of document

Product specification

- shielded M12 Ethernet connection cable
- Cat.5e, 4-pole, D-coded (IEC 61076-2-101)
- M12 connector, angled on free line end
- extrusion-coated cable on M12 connector
- 4x1xAWG22/7, tinned with plastic foil
- inner sheath FRNC, aluminum-coated plastic foil
- overall shield: tinned copper braid, approx. 85% covered
- Profinet (WS-GE-BL-OR) wiring
- green cable, PUR

- variants: 1.0 m, 2.0 m, 5.0 m, 10.0 m
- other cable lengths on request

© 2015 METZ CONNECT - Technische Änderungen vorbehalten! Subject to modifications! Sous réserve de modifications techniques!

METZ CONNECT GmbH | Im Tal 2 | 78176 Blumberg | Germany
Phone +49 7702 533-0 | Fax +49 7702 533-433
Weitere technische Dokumentationen siehe / For more technical documentation see/
Plus de documentation technique à télécharger sur www.metz-connect.com

Members of METZ CONNECT
RIA CONNECT BTR NETCOM MCQ TECH

chanhvinh.com

P | Cabling

METZ CONNECT
We realize ideas

Data sheet

Connection cable M12 angled 4-pole D-coded 5.0 m

P/N 142M1D90050
EAN 4250184174950

2015-24-08

Technical Data

General Data	
Fields of application	
	Industrial Ethernet
Design	Ethernet-Connection cable
Shielding	shielded
Transmission technology	Copper
Number of twisting elements	2
Twisting element	Pair
Wiring	Profinet
Color coding fiber/ wire(s)	yellow, white, orange, blue
Color	green
Dimensions	
Dimension - Interface 2 (L x W x H)	35.30 x 15.00 x 45.00 mm
Dimension - Interface 2 (L x W x H)	1.39 x 0.59 x 1.77 in.
Cable length (m)	5.00 m
Cable length (ft)	16.40 ft
Transmission characteristics	
Category (ISO)	5e
Connections/interfaces	
Connector technology interface 1	Free line end
Connector technology interface 2	M12-plug
Coding interface 2	D-coded
Number of ports interface 2	1
Number of ports interface 2 equipped	1
Number of positions/contacts interface 2	4
Termination data, stranded wire (min. - max.)	
Conductor cross section, stranded wire	AWG 22
Conductor cross section, stranded wire	0.355 mm²
Conductor diameter, stranded wire (bare copper)	0.762 mm
Conductor diameter, stranded wire (bare copper)	0.03 in.

© 2015 METZ CONNECT - Technische Änderungen vorbehalten! Subject to modifications! Sous réserve de modifications techniques!

chanhvinh.com

P | Cabling

METZ CONNECT
We realize ideas

Data sheet

Connection cable M12 angled 4-pole D-coded 5.0 m

P/N 142M1D90050
EAN 4250184174950

2015-24-08

Technical Data

Electrical characteristics	
Current carrying capacity	max. 4 A
Through resistance	max. 5 mOhm
Insulation resistance	min. 10^8 MOhm
Mechanical characteristics	
Shielding braid coverage	85 %
Materials and material properties	
Material - Cable jacket	PUR
Material - Inner cable jacket	FRNC, with an aluminized film
Material - Body interface 2	Plastics
Material - Contact interface 2	CuZn (brass)
Material - Contact finish interface 2	Au (gold)
Material - Union nut interface 2	CuZn (brass)
Material - Union nut finish interface 2	Ni (nickel)
Material - Main shield	Cu (copper) braid
Material - Main shield finish	Sn (tin)
Flame retardancy	yes
Environmental conditions	
Temperature (min. - max.)	
Temperature - Storage °C	-30 - 90 °C
Temperature - Storage °F	-22 - 194 °F
Particulate ingress interface 2	IP6X when plugged in
Liquid ingress/immersion interface 2	IPX7 when plugged in
Pollution degree interface 2	3
Approvals	
RoHS	compliant

© 2015 METZ CONNECT - Technische Änderungen vorbehalten! Subject to modifications! Sous réserve de modifications techniques!

METZ CONNECT GmbH | Im Tal 2 | 78176 Blumberg | Germany
Phone +49 7702 533-0 | Fax +49 7702 533-433
Weitere technische Dokumentationen siehe / For more technical documentation see/
Plus de documentation technique à télécharger sur www.metz-connect.com

Members of METZ CONNECT
RIA CONNECT BTR NETCOM MCQ TECH

chanhvinh.com

P | Cabling

We realize ideas

Data sheet

Connection cable M12 angled 4-pole D-coded 5.0 m

P/N 142M1D90050

EAN 4250184174950

2015-24-08

Technical Data

The product meets the following standards

Generic cabling systems	
General requirements	ISO/IEC 11801-1 | DIN EN 50173-1
Connectors for electronic equipment	
Round plug connectors	DIN EN 61076-2-101
Multi-element metallic cables used in analogue and digital communication and control	DIN EN 50288-4-1
Test for vertical flame propagation for a single insulated wire or cable	DIN EN 60332-1-2
Measurement of smoke density of cables burning	DIN EN 61034

Classifications

ETIM 5.0	EC002599

Packing details

Type of packaging	1 pc(s) / plastic bag

© 2015 METZ CONNECT - Technische Änderungen vorbehalten! Subject to modifications! Sous réserve de modifications techniques!

chanhvinh.com

METZ CONNECT
We realize ideas

P | Cabling

Data sheet

Connection cable M12 angled 4-pole D-coded 5.0 m

P/N 142M1D90050
EAN 4250184174950

2015-24-08

Illustrations

Dimensional drawing

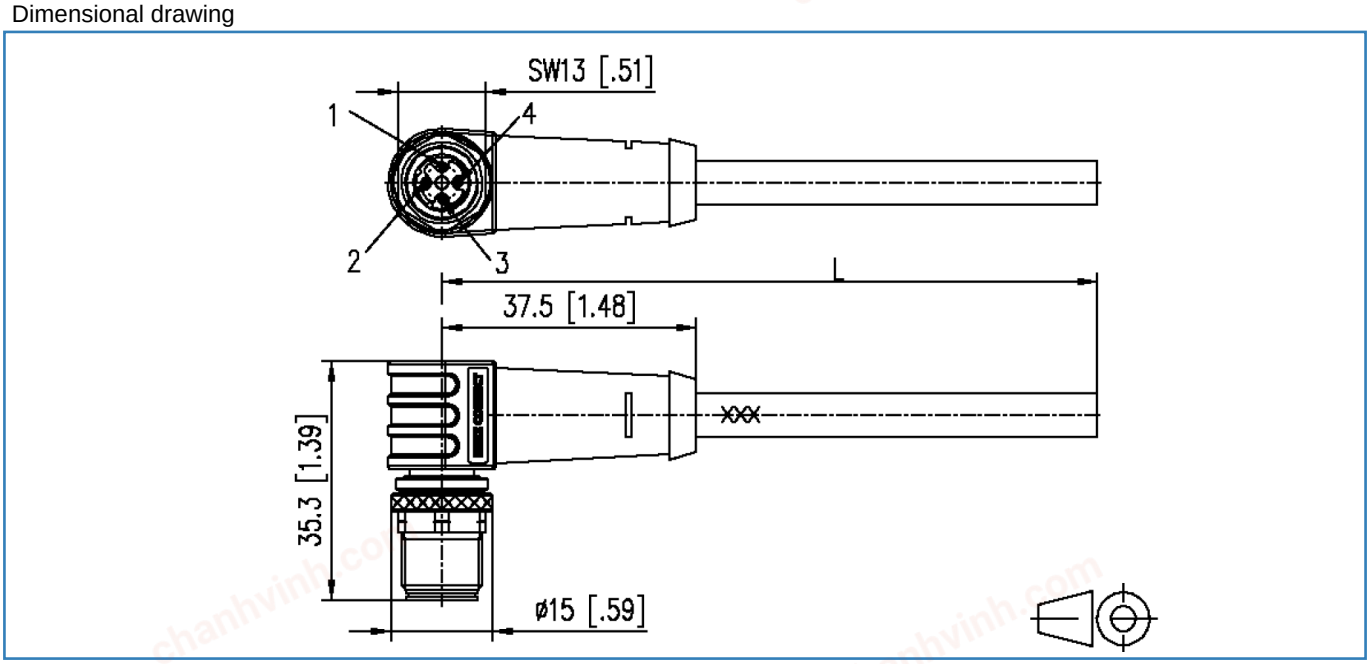

Wiring

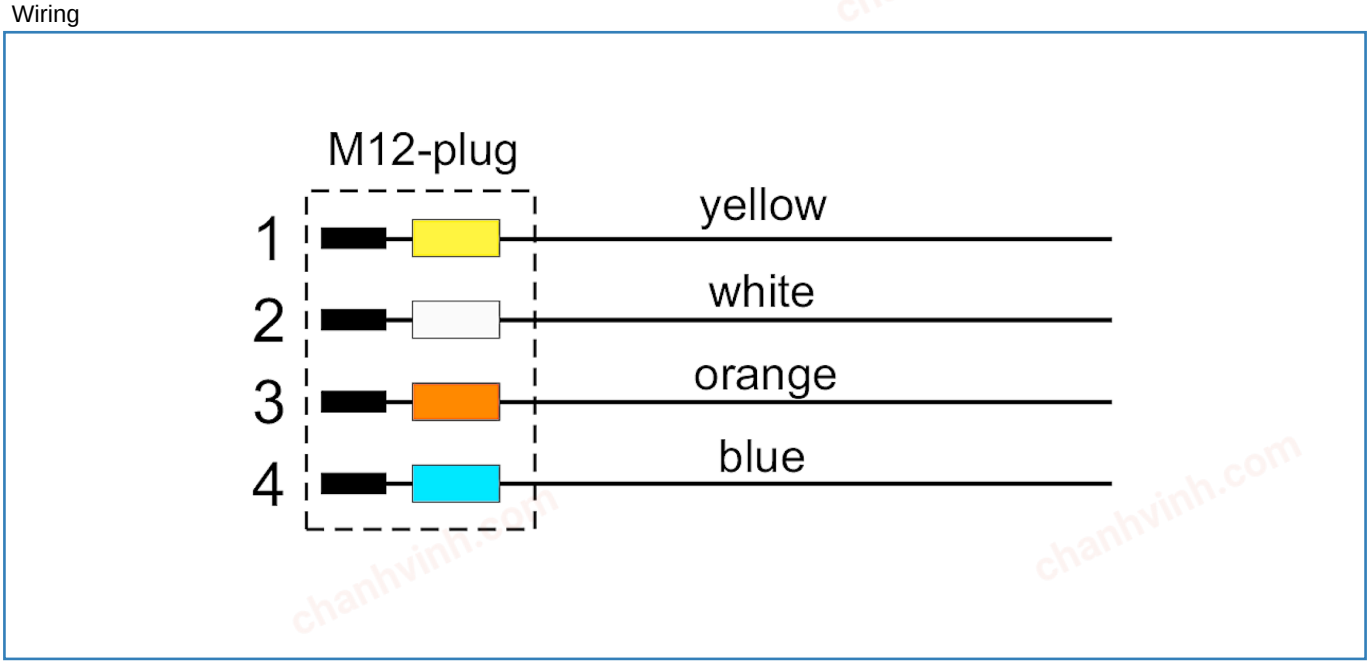

© 2015 METZ CONNECT - Technische Änderungen vorbehalten! Subject to modifications! Sous réserve de modifications techniques!