chanhvinh.com

6W SIP Package DC-DC Regulated Converter SPBW06 & DPBW06 series

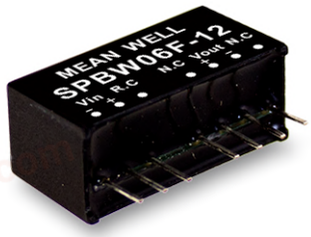

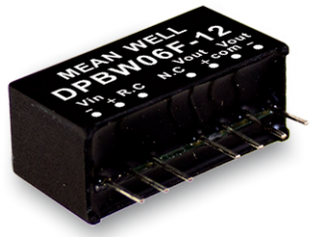

Automate Industrial Security Network Telecom

Features

- SIP8 package with industry standard pinout
- 4:1 ultrawide input range
- Operating temperature range -40 ~ +85℃
- No minimum load required
- High efficiency up to 89%
- Protections: Short circuit (Continuous) / Overload
- 1.5KVDC I/O isolation
- Remote ON/OFF control
- 3 years warranty

Applications

- Telecom/datacom system
- Wireless network
- Industrial control facility
- Instrument
- Analyzer
- Detector
- Data switch

GTIN CODE

MW Search: https://www.meanwell.com/serviceGTIN.aspx

Description

SPBW06 and DPBW06 series are 6W isolated and regulated module type DC-DC converter with SIP8 package. It features international standard pins, a high efficiency up to 89%, wide working temperature range -40~+85℃, 1.5KVDC I/P-O/P isolation voltage, continuous-mode short circuit protection, etc. The models account for different input voltage 9~36V and 18~75V 4:1 wide input range, and various output voltage, 3.3V/5V/12V/15V for single output and ±5V/±12V/±15V for dual outputs, which are suitable for all kinds of systems, Such as industrial control, telecommunication field, distributed power architecture, and so on.

Model Encoding

SPBW06F-12

- 12 — Output voltage (3.3/5/12/15Vdc，±5/±12/±15Vdc)
- F — Input voltage (F: 9~36Vdc，G: 18~75Vdc)
- 06 — Rated wattage
- SPBW — Series name { S:Single output / D:Dual output

chanhvinh.com

6W SIP Package DC-DC Regulated Converter SPBW06 & DPBW06 series

MODEL SELECTION TABLE

ORDER NO.	INPUT			OUTPUT		EFFICIENCY (TYP.)	CAPACITOR LOAD (MAX.)
	INPUT VOLTAGE (RANGE)	INPUT CURRENT		OUTPUT VOLTAGE	OUTPUT CURRENT		
		NO LOAD	FULL LOAD				
SPBW06F-03	24V (9 ~ 36V)	4mA	310mA	3.3V	0 ~ 1500mA	81%	4700μF
SPBW06F-05		4mA	298mA	5V	0 ~ 1200mA	85%	2200μF
SPBW06F-12		5mA	288mA	12V	0 ~ 500mA	88%	1100μF
SPBW06F-15		5mA	288mA	15V	0 ~ 400mA	88%	470μF
DPBW06F-05		4mA	298mA	±5V	±0 ~ 600mA	86%	*1400μF
DPBW06F-12		6mA	288mA	±12V	±0 ~ 250mA	88%	*660μF
DPBW06F-15		7mA	288mA	±15V	±0 ~ 200mA	88%	*220μF
SPBW06G-03	48V (18 ~ 75V)	3mA	155mA	3.3V	0 ~ 1500mA	82%	4700μF
SPBW06G-05		3mA	150mA	5V	0 ~ 1200mA	85%	2200μF
SPBW06G-12		3mA	145mA	12V	0 ~ 500mA	88%	1100μF
SPBW06G-15		5mA	145mA	15V	0 ~ 400mA	87%	470μF
DPBW06G-05		4mA	150mA	±5V	±0 ~ 600mA	85%	*1400μF
DPBW06G-12		3mA	145mA	±12V	±0 ~ 250mA	89%	*660μF
DPBW06G-15		4mA	145mA	±15V	±0 ~ 200mA	88%	*220μF

* For each output

chanhvinh.com

6W SIP Package DC-DC Regulated Converter SPBW06 & DPBW06 series

SPECIFICATION				
INPUT	VOLTAGE RANGE	F: 9~36Vdc , G: 18~75Vdc		
	SURGE VOLTAGE (100ms max.)	24Vin models : 50Vdc, 48Vin models : 100Vdc		
	FILTER	Internal capacitor		
	PROTECTION	Fuse recommended. 24Vin models: 1.25A fast-acting Type, 48Vin models: 630mA fast-scting Type		
	INTERNAL POWER DISSIPATION	500mW		
OUTPUT	VOLTAGE ACCURACY	±1.5%		
	RATED POWER	6W		
	RIPPLE & NOISE Note.2	100mVp-p		
	LINE REGULATION Note.3	±0.2%		
	LOAD REGULATION Note.4	Single output models: ±0.5%, Dual output models:±1%		
	SWITCHING FREQUENCY (Typ.)	580KHz		
PROTECTION	SHORT CIRCUIT	Protection type : Continuous, automatic recovery		
	OVERLOAD	Protection type : Recovers automatically after fault condition is removed		
FUNCTION	REMOTE CONTROL	Power ON: R.C. ~ -Vin high impedance open ; Power OFF: supplying 2~4mA for R.C. pin (Please refer to the application circuit in following page)		
ENVIRONMENT	COOLING	Free-air convection		
	WORKING TEMP.	-40 ~ +85℃ (Refer to "Derating Curve")		
	CASE TEMPERATURE	+100℃ max.		
	WORKING HUMIDITY	20% ~ 90% RH non-condensing		
	STORAGE TEMP., HUMIDITY	-55 ~ +125℃, 10 ~ 95% RH non-condensing		
	TEMP. COEFFICIENT	0.03% / ℃ (0 ~ 65℃)		
	SOLDERING TEMPERATURE	1.5mm from case of 1 ~ 3sec./260℃ max.		
	VIBRATION	10 ~ 500Hz, 2G 10min./1cycle, period for 60min. each along X, Y, Z axes		
SAFETY & EMC (Note.5)	SAFETY STANDARDS	EAC TP TC 020/2011 (EAC TP TC 004 for 48Vin type only) approved		
	WITHSTAND VOLTAGE	I/P-O/P:1.5KVDC		
	ISOLATION RESISTANCE	I/P-O/P:100M Ohms / 500VDC / 25℃/ 70% RH		
	ISOLATION CAPACITANCE (Typ.)	50pF		
	EMC EMISSION	**Parameter**	**Standard**	**Test Level / Note**
		Conducted	BS EN/EN55032(CISPR32)	N/A
		Radiated	BS EN/EN55032(CISPR32)	Class A/B with external components
	EMC IMMUNITY	**Parameter**	**Standard**	**Test Level / Note**
		ESD	BS EN/EN61000-4-2	Level 2, ±8KV air, ±4KV contact
		Radiated Susceptibility	BS EN/EN61000-4-3	Level 2, 3V/m
		EFT/Bursts	BS EN/EN61000-4-4	Level 1, 0.5KV
		Surge	BS EN/EN61000-4-5	Level 1, 0.5KV Line-Line
		Conducted	BS EN/EN61000-4-6	Level 2, 3V(e.m.f.)
		Magnetic Field	BS EN/EN61000-4-8	Level 2, 3A/m
OTHERS	MTBF	1850Khrs MIL-HDBK-217F(25℃)		
	DIMENSION (L*W*H)	21.8*9.2*11.1mm (0.86*0.36*0.44 inch)		
	CASE MATERIAL	Non-Conductive black plastic (UL 94V-0 rated)		
	PACKING	4.5g ; 14pcs/per tube, 2058pcs/147 tube/per carton		

NOTE

1.All parameters are specified at normal input(F:24Vdc, G:48Vdc), rated load, 25℃ 70% RH ambient.
2.Ripple & noise are measured at 20MHz by using a 12" twisted pair terminated with a 0.1μf & 47μf capacitor.
3.Line regulation is measured from low line to high line at rated load.
4.Load regulation is measured from 0% to 100% rated load.
5.The final equipment must be re-confirm that it still meet EMC directives. For guidance on how to perform these EMC tests, please refer to “EMI testing of component power supplies.”(as available on http://www.meanwell.com)
※ Product Liability Disclaimer ： For detailed information, please refer to https://www.meanwell.com/serviceDisclaimer.aspx

chanhvinh.com

■ Mechanical Specification

- All dimensions in mm(inch)
- Tolerance:x.x±0.5mm(x.xx±0.02")
- Pin pitch tolerance:±0.05mm (±0.002")

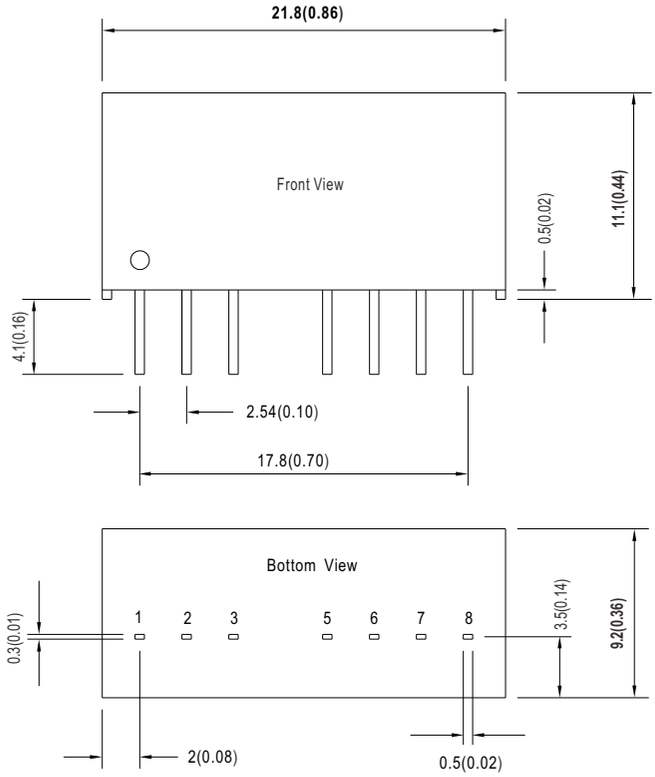

■ Plug Assignment

Pin-Out		
Pin No.	SPBW06 (Single output)	DPBW06 (Dual output)
1	-Vin	-Vin
2	+Vin	+Vin
3	R.C.	R.C.
5	N.C.	N.C.
6	+Vout	+Vout
7	-Vout	Common
8	N.C.	-Vout

■ Derating Curve

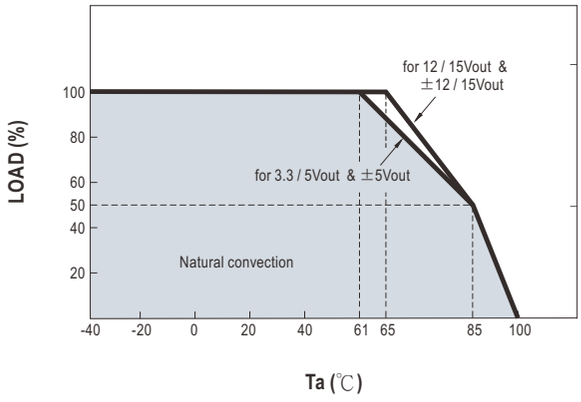

chanhvinh.com

■ Remote ON/OFF Control

The remote ON/OFF input feature of the converter allows external circuitry to turn the converter ON or OFF. Active-high remote ON/OFF is available as standard. The converter is turned ON if the remote ON/OFF pin is open circuit. Supply the ON/OFF pin at 2mA to 4mA will turn the converter OFF. The signal level of the ON/OFF pin is defined with respect to ground. If not using the ON/OFF pin, leave the pin open (module will be ON, recommended application as below)

ON/OFF pin appliend current via 1KΩ

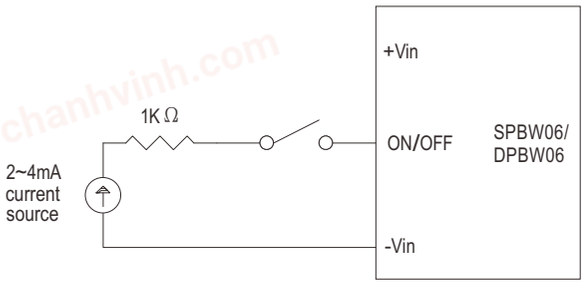

Application circuit

■ EMC Suggestion Circuit

※Required external components to meet BS EN/EN55032 class A/B emission are as below:

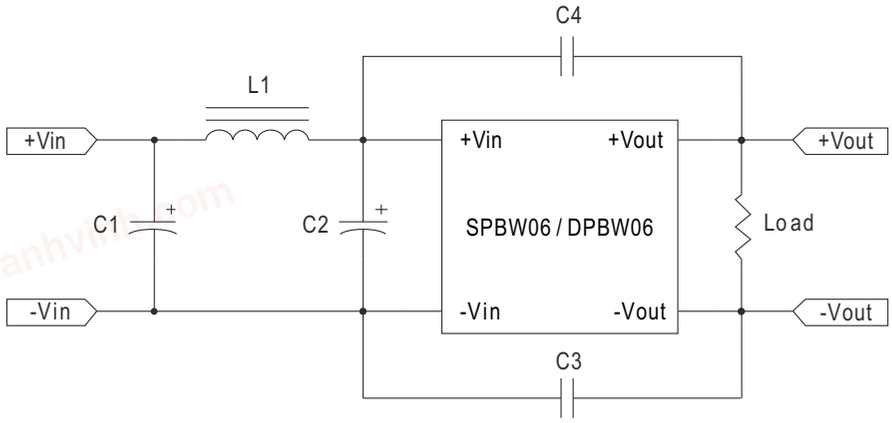

Model No.	BS EN/EN55032 Class A					BS EN/EN55032 Class B				
	C1	C2	C3	C4	L1	C1	C2	C3	C4	L1
SPBW06F-03	10μF/50V	NC	150pF/2KV	150pF/2KV	10μH	10μF/50V	NC	1500pF/2KV	1500pF/2KV	10μH
SPBW06F-05	10μF/50V	NC	150pF/2KV	150pF/2KV	10μH	10μF/50V	NC	1500pF/2KV	1500pF/2KV	10μH
SPBW06F-12	10μF/50V	NC	150pF/2KV	150pF/2KV	10μH	10μF/50V	NC	1500pF/2KV	1500pF/2KV	10μH
DPBW06F-15	10μF/50V	NC	150pF/2KV	150pF/2KV	10μH	10μF/50V	NC	1500pF/2KV	1500pF/2KV	10μH
DPBW06F-05	10μF/50V	NC	150pF/2KV	150pF/2KV	10μH	10μF/50V	NC	1500pF/2KV	1500pF/2KV	10μH
DPBW06F-12	10μF/50V	NC	150pF/2KV	150pF/2KV	10μH	10μF/50V	NC	1500pF/2KV	1500pF/2KV	10μH
DPBW06F-15	10μF/50V	NC	150pF/2KV	150pF/2KV	10μH	10μF/50V	NC	1500pF/2KV	1500pF/2KV	10μH
SPBW06G-03	1μF/100V	NC	150pF/2KV	150pF/2KV	10μH	2.2μF/100V	2.2μF/100V	1500pF/2KV	1500pF/2KV	10μH
SPBW06G-05	1μF/100V	NC	150pF/2KV	150pF/2KV	10μH	2.2μF/100V	2.2μF/100V	1500pF/2KV	1500pF/2KV	10μH
SPBW06G-12	1μF/100V	NC	150pF/2KV	150pF/2KV	10μH	2.2μF/100V	2.2μF/100V	1500pF/2KV	1500pF/2KV	10μH
SPBW06G-15	1μF/100V	NC	150pF/2KV	150pF/2KV	10μH	2.2μF/100V	2.2μF/100V	1500pF/2KV	1500pF/2KV	10μH
DPBW06G-05	1μF/100V	NC	150pF/2KV	150pF/2KV	10μH	2.2μF/100V	NC	1500pF/2KV	1500pF/2KV	10μH
DPBW06G-12	1μF/100V	NC	150pF/2KV	150pF/2KV	10μH	2.2μF/100V	NC	1500pF/2KV	1500pF/2KV	10μH
DPBW06G-15	1μF/100V	NC	150pF/2KV	150pF/2KV	10μH	2.2μF/100V	NC	1500pF/2KV	1500pF/2KV	10μH

Note: All of capacitors are ceramic capacitors

chanhvinh.com

■ Packing

Standard Tube Packing	MPQ Per Tube (PCS)	One Tube G.W.	Max. Q'TY/ Carton(PCS)	One Carton G.W.
Unit : mm 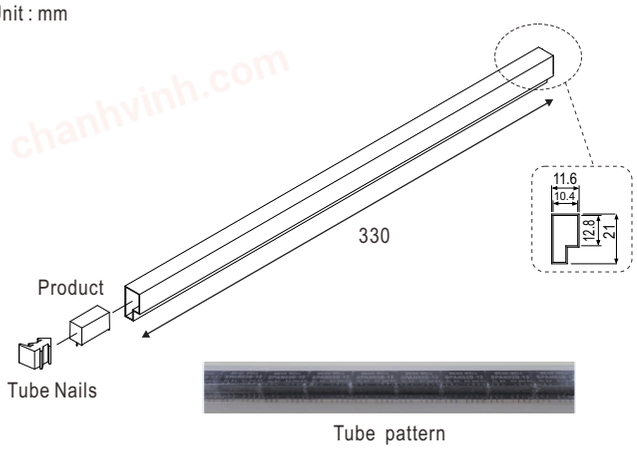 Tube pattern 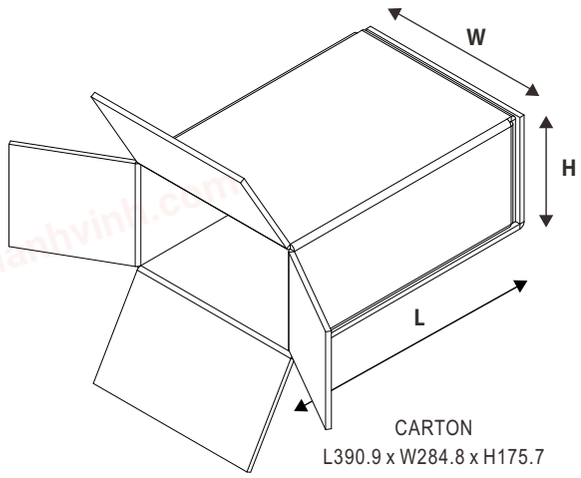 CARTON L390.9 x W284.8 x H175.7	14	81.5g	2058	13.98Kg

■ Installation Manual

Please refer to : http://www.meanwell.com/manual.html