chanhvinh.com

1W SIP4 Package DC-DC Unregulated Converter

SMU01-N series

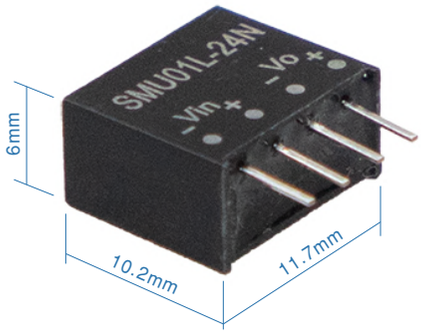

Automate Industrial Security Network Telecom

Features

- Industrial standard SIP-4 package
- ±10% input range
- Operating temperature range -40℃ ~ +105℃
- Comply to BS EN/EN55032 radiated Class B without additional components
- Low no load input current
- Efficiency up to 88%
- Protections: Short circuit (Continuous)
- 1500VDC I/O isolation
- 3 years warranty

Applications

- Telecom/datacom system
- Wireless network
- Industrial control facility
- Instrument
- Analyzer
- Detector
- Data switch

GTIN CODE

MW Search: https://www.meanwell.com/serviceGTIN.aspx

Description

SMU01-N series is a unregulated 1 Watt DC/DC converter in standard SIP-4 plastic package, with ±10% input voltage range. It features isolated voltage of 1500VDC, extremely low no load current, wide working temperature range from -40~ +105°C, and suits all kinds of systems like industrial control, automation field, and so on.

Model Encoding

SMU 01 K – 12 N

- N — NEW Series
- 12 — Output voltage (3.3/5/9/12/15/24Vdc)
- K — Input voltage (K: 2.97 ~ 3.63Vdc，L: 4.5 ~ 5.5Vdc，M: 10.8 ~ 13.2Vdc，N: 21.6 ~ 26.4Vdc)
- 01 — Rated wattage
- SMU — Series name

chanhvinh.com

1W SIP4 Package DC-DC Unregulated Converter SMU01-N series

MODEL SELECTION TABLE

ORDER NO.	INPUT			OUTPUT		EFFICIENCY (TYP.)	CAPACITOR LOAD (MAX.)
	INPUT VOLTAGE (RANGE)	INPUT CURRENT		OUTPUT VOLTAGE	OUTPUT CURRENT		
		NO LOAD	FULL LOAD				
SMU01K-03N	3.3V (2.97 ~ 3.63V)	10mA	379mA	3.3V	300mA	80%	470μF
SMU01K-05N		10mA	379mA	5V	200mA	80%	470μF
SMU01L-03N	5V (4.5 ~ 5.5V)	6mA	250mA	3.3V	300mA	80%	470μF
SMU01L-05N		6mA	235mA	5V	200mA	85%	470μF
SMU01L-09N		7mA	235mA	9V	111mA	85%	220μF
SMU01L-12N		9mA	235mA	12V	84mA	85%	220μF
SMU01L-15N		12mA	233mA	15V	67mA	86%	220μF
SMU01L-24N		20mA	235mA	24V	42mA	85.5%	100μF
SMU01M-03N	12V (10.8 ~ 13.2V)	6mA	104mA	3.3V	300mA	80%	470μF
SMU01M-05N		6mA	96mA	5V	200mA	87%	470μF
SMU01M-09N		6mA	96mA	9V	111mA	87%	220μF
SMU01M-12N		6mA	96mA	12V	84mA	87%	220μF
SMU01M-15N		6mA	95mA	15V	67mA	88%	220μF
SMU01M-24N		10mA	95mA	24V	42mA	88%	100μF
SMU01N-03N	24V (21.6 ~ 26.4V)	5mA	52mA	3.3V	300mA	80%	470μF
SMU01N-05N		5mA	49mA	5V	200mA	85%	470μF
SMU01N-09N		5mA	49mA	9V	111mA	85%	220μF
SMU01N-12N		5mA	49mA	12V	84mA	85%	220μF
SMU01N-15N		5mA	49mA	15V	67mA	85%	220μF
SMU01N-24N		6mA	49mA	24V	42mA	85%	100μF

chanhvinh.com

1W SIP4 Package DC-DC Unregulated Converter SMU01-N series

SPECIFICATION				
INPUT	VOLTAGE RANGE	K: 2.97 ~ 3.63Vdc , L: 4.5 ~ 5.5Vdc , M: 10.8 ~ 13.2Vdc , N: 21.6 ~ 26.4Vdc		
	SURGE VOLTAGE (100ms max.)	3.3, 5Vin models : 9Vdc ; 12Vin models : 18Vdc ; 24Vin models : 30Vdc		
	FILTER	Internal capacitor		
	PROTECTION	Fuse recommended. 3.3Vin models: 1000mA Slow-Blow Type, 5Vin models: 500mA Slow-Blow Type, 12Vin models: 300mA Slow-Blow Type, 24Vin models: 150mA Slow-Blow Type		
OUTPUT	VOLTAGE ACCURACY	±3% max.		
	RATED POWER	1W		
	RIPPLE & NOISE Note.2	75mVp-p max.		
	LINE REGULATION Note.3	±1.5% for 1% input variation for 3.3V output, ±1.2% for 1% input variation for other output		
	LOAD REGULATION Note.4	8% for other output, 12% for 3.3V output		
	SWITCHING FREQUENCY (Typ.)	200KHz min.		
	MINIMUM LOAD	10% of full load		
PROTECTION	SHORT CIRCUIT	Continuous, automatic recovery		
ENVIRONMENT	COOLING	Free-air convection		
	WORKING TEMP.	-40 ~ +105℃ (Refer to "Derating Curve")		
	CASE TEMPERATURE	+115℃ max.		
	WORKING HUMIDITY	5% ~ 95% RH non-condensing		
	STORAGE TEMP., HUMIDITY	-55 ~ +125℃, 10 ~ 95% RH non-condensing		
	TEMP. COEFFICIENT	±0.05% / ℃		
	SOLDERING TEMPERATURE	1.5mm from case of 3 ~ 5sec./265℃ max.		
	VIBRATION	10 ~ 500Hz, 2G 10min./1cycle, period for 60min. each along X, Y, Z axes		
SAFETY & EMC (Note.5)	SAFETY STANDARDS	EAC TP TC 020/2011 approved		
	WITHSTAND VOLTAGE	I/P-O/P:1.5KVDC		
	ISOLATION RESISTANCE	I/P-O/P:100M Ohms / 500VDC / 25℃/ 70% RH		
	ISOLATION CAPACITANCE (Typ.)	50pF		
	EMC EMISSION	**Parameter**	**Standard**	**Test Level / Note(Note.6)**
		Conducted	BS EN/EN55032(CISPR32)	N/A
		Radiated	BS EN/EN55032(CISPR32)	Class B without additional components
	EMC IMMUNITY	**Parameter**	**Standard**	**Test Level / Note**
		ESD	BS EN/EN61000-4-2	Level 3, ±8KV air
		Radiated Susceptibility	BS EN/EN61000-4-3	Level 2, 3V/m
		EFT/Bursts	BS EN/EN61000-4-4	Level 1, 0.5KV
		Surge	BS EN/EN61000-4-5	Level 2, 0.5KV Line-Line
		Conducted	BS EN/EN61000-4-6	Level 2, 3V(e.m.f.)
		Magnetic Field	BS EN/EN61000-4-8	Level 1, 1A/m
OTHERS	MTBF	2000Khrs min. MIL-HDBK-217F(25℃)		
	DIMENSION (L*W*H)	11.7*6*10.2mm (0.46*0.24*0.4 inch)		
	CASE MATERIAL	Non-Conductive black plastic (UL 94V-0 rated)		
	PACKING	1.3g ; 42pcs/per tube, 6720pcs/160 tube/per carton		

NOTE

1. All parameters are specified at normal input(K:3.3Vdc, L:5Vdc, M:12Vdc, N:24Vdc), rated load, 25℃ 70% RH ambient.
2. Ripple & noise are measured at 20MHz by using a 12" twisted pair terminated with a 0.1μf & 47μf capacitor.
3. Line regulation is measured from low line to high line at rated load.
4. Load regulation is measured from 10% to 100% rated load.
5. The final equipment must be re-confirm that it still meet EMC directives. For guidance on how to perform these EMC tests, please refer to “EMI testing of component power supplies.”(as available on http://www.meanwell.com)
6. An external input filter capacitor is required if the module has to meet BS EN/EN61000-4-4, BS EN/EN61000-4-5. The filter capacitor Power Mate suggest: 470μF/100V.

※ Product Liability Disclaimer : For detailed information, please refer to https://www.meanwell.com/serviceDisclaimer.aspx

chanhvinh.com

1W SIP4 Package DC-DC Unregulated Converter

SMU01-N series

■ Mechanical Specification

- All dimensions in mm(inch)
- Tolerance:x.x±0.5mm(x.xx±0.02")
  x.xx±0.25mm(x.xxx±0.01")
- Pin size is 0.50x0.30mm (0.02" x0.012")
- Pin is Tolerance:x.xx±0.05mm(x.xxx±0.002")

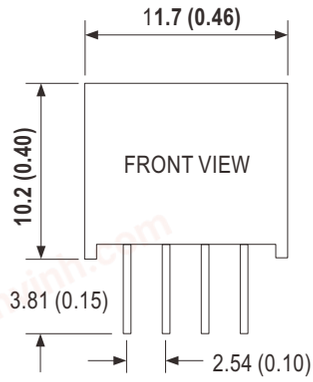

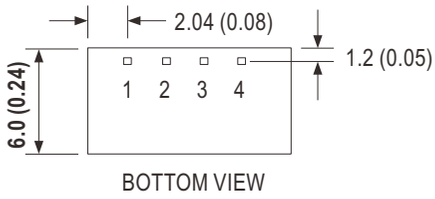

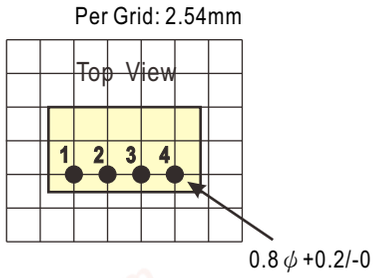

■ Plug Assignment

Pin No.	Pin-Out
1	-Vin
2	+Vin
3	-Vout
4	+Vout

■ Derating Curve

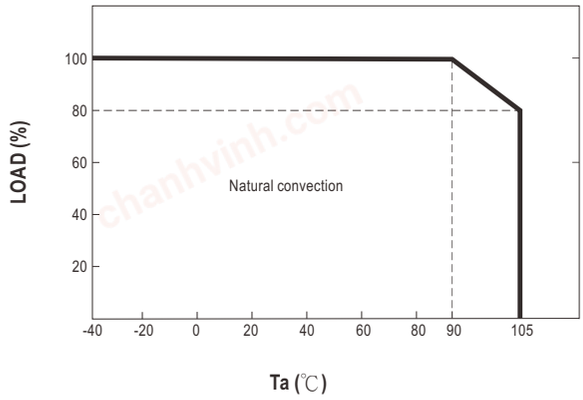

chanhvinh.com

■ Packing

Standard Tube Packing	MPQ Per Tube (PCS)	One Tube G.W.	Max. Q'TY/ Carton(PCS)	One Carton G.W.
Unit : mm 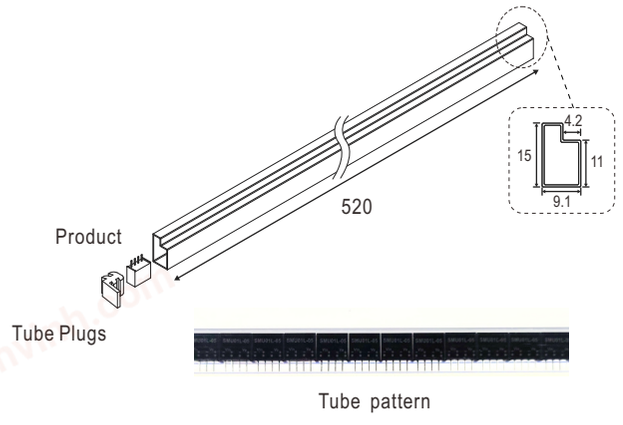 Tube pattern 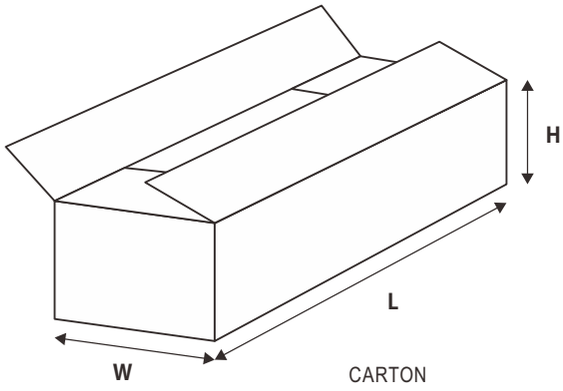 CARTON L620 x W230 x H230	42	75g	6720	15.4Kg

■ Installation Manual

Please refer to : http://www.meanwell.com/manual.html