chanhvinh.com

20W 2"x1" Package Reliable Railway DC-DC Converter RSDW20 & RDDW20 series





Railway Automate Industrial Security Network Telecom

Features

- Compliance with EN50155 railway standard
- DIP 2"x1" package with standard pinout
- 4:1 wide input range
- Wide operating temperature range -40 ~ +85℃
- No minimum load required
- Full encapsulated
- Protections: Short circuit (Continuous) / Overload / Over voltage / Input under voltage
- 1.5KVDC,3KVDC I/O isolation by models
- Remote ON/OFF control
- 3 years warranty

Applications

- Bus, tram, metro or railway system
- Telecom/datacom system
- Wireless network
- Industrial control facility
- Instrument
- Analyzer
- Highly vibrating, heavily dusty, exteremely low or high temperature harsh environment

GTIN CODE

MW Search: https://www.meanwell.com/serviceGTIN.aspx

Description

RSDW20 and RDDW20 series are 20W module type DC-DC reliable railway converter with 2"x1" package. It features international standard pins, a high efficiency up to 90%, wide working temperature range -40~+85℃, 1.5KVDC(F/G models)/3KVDC(H models) I/P-O/P isolation voltage, compliance with EN50155 railway standard, continuous-mode short circuit protection, etc. The models account for different input voltage 9~36V, 18~75V and 43~160V 4:1 wide input range, and various output voltage, 3.3V/5V/12V/15V for single output and ±5V/±12V/±15V for dual outputs, which are suitable for railway, trams, buses and also can be used in the harsh environment with high vibration, high dust, extremely low or high temperature, etc.

Model Encoding

R S DW20 H – 12

- 12 — Output voltage (3.3/5/12/15Vdc，±5/±12/±15Vdc)
- H — Input voltage (F: 9~36Vdc，G: 18~75Vdc，H: 43~160Vdc)
- 20 — Rated wattage
- RSDW — Series name { S:Single output / D:Dual output

chanhvinh.com

20W 2"x1" Package Reliable Railway DC-DC Converter RSDW20 & RDDW20 series

MODEL SELECTION TABLE

ORDER NO.	INPUT			OUTPUT		EFFICIENCY (Typ.)	CAPACITOR LOAD (MAX.)
	INPUT VOLTAGE (RANGE)	INPUT CURRENT		OUTPUT VOLTAGE	OUTPUT CURRENT		
		NO LOAD	FULL LOAD				
RSDW20F-03	Normal 24V (9 ~ 36V)	55mA	869mA	3.3V	5500mA	87%	5500μF
RSDW20F-05		55mA	935mA	5V	4000mA	90%	4000μF
RSDW20F-12		55mA	928mA	12V	1670mA	90%	1800μF
RSDW20F-15		55mA	935mA	15V	1330mA	90%	1500μF
RDDW20F-05		70mA	945mA	±5V	±0 ~ 2000mA	89%	*2000μF
RDDW20F-12		35mA	947mA	±12V	±0 ~ 835mA	88%	*1000μF
RDDW20F-15		35mA	935mA	±15V	±0 ~ 666mA	88%	*800μF
RSDW20G-03	Normal 48V (18 ~ 75V)	25mA	430mA	3.3V	5500mA	88%	5500μF
RSDW20G-05		25mA	465mA	5V	4000mA	89%	4000μF
RSDW20G-12		25mA	465mA	12V	1670mA	90%	1800μF
RSDW20G-15		25mA	465mA	15V	1330mA	90%	1500μF
RDDW20G-05		45mA	468mA	±5V	±0 ~ 2000mA	89%	*2000μF
RDDW20G-12		25mA	470mA	±12V	±0 ~ 835mA	88%	*1000μF
RDDW20G-15		25mA	470mA	±15V	±0 ~ 666mA	88%	*800μF
RSDW20H-05	Normal 110V (43 ~ 160V)	3mA	205mA	5V	4000mA	88.5%	5600μF
RSDW20H-12		3mA	202mA	12V	1670mA	90%	1000μF
RSDW20H-15		3mA	203mA	15V	1330mA	89.5%	1000μF
RDDW20H-12		3mA	206mA	±12V	±0 ~ 833mA	89%	*680μF
RDDW20H-15		3mA	206mA	±15V	±0 ~ 667mA	88.5%	*350μF

* For each output

chanhvinh.com

20W 2"x1" Package Reliable Railway DC-DC Converter RSDW20 & RDDW20 series

SPECIFICATION				
INPUT	VOLTAGE RANGE	F: 9~36Vdc , G: 18~75Vdc , H: 43~160Vdc		
	SURGE VOLTAGE (100ms max.)	24Vin models : 50Vdc, 48Vin models : 100Vdc, 110Vin models : 200Vdc		
	FILTER	Pi type		
	PROTECTION	Fuse recommended. 24Vin models: 4A delay time Type, 48Vin models: 2A delay time Type, 110Vin models: 0.8A delay time Type		
OUTPUT	VOLTAGE ACCURACY	±1.5%		
	RATED POWER	20W		
	RIPPLE & NOISE Note.2	60mVp-p		
	LINE REGULATION Note.3	±0.2%		
	LOAD REGULATION Note.4	Single output models: ±0.5%, Dual output models:±1%		
	CROSS REGULATION	±5% @ 25%~100% load		
	SWITCHING FREQUENCY (Typ.)	F/G: Single output 350KHz, Dual output 400KHz H: 250KHz		
	EXTERNAL TRIM ADJ. RANGE (Typ.)	±10% (Single output model only)		
PROTECTION	SHORT CIRCUIT	Protection type : Continuous, automatic recovery		
	OVERLOAD	110 ~ 160% rated output power		
		Protection type : Recovers automatically after fault condition is removed		
	OVER VOLTAGE	Protection type : Clamp by diode		
	UNDER VOLTAGE LOCKOUT	Start-up voltage	24Vin: 8.8Vdc, 48Vin: 17Vdc, 110Vin: 40Vdc	
		Shutdown voltage	24Vin: 8Vdc, 48Vin: 16Vdc, 110Vin: 38Vdc	
FUNCTION	REMOTE CONTROL	Power ON: >5.5~75Vdc or open circuit (F/G models) ; >3.5~75Vdc or open circuit (H models) Power OFF: <1.2Vdc or short (F/G/H models)		
ENVIRONMENT	COOLING	Free-air convection		
	WORKING TEMP.	-40 ~ +85℃ (Refer to "Derating Curve")		
	CASE TEMPERATURE	+105℃ max.		
	WORKING HUMIDITY	20% ~ 90% RH non-condensing		
	STORAGE TEMP., HUMIDITY	-55 ~ +125℃, 10 ~ 95% RH non-condensing		
	TEMP. COEFFICIENT	0.03% / ℃ (0 ~ 71℃)		
	SOLDERING TEMPERATURE	1.5mm from case of 1 ~ 3sec./260℃ max.		
	VIBRATION	10 ~ 500Hz, 2G 10min./1cycle, period for 60min. each along X, Y, Z axes		
SAFETY & EMC (Note.5)	SAFETY STANDARDS	EAC TP TC 020/2011(EAC TP TC 004 for 48Vin/110Vin type only) approved		
	WITHSTAND VOLTAGE	F/G: I/P-O/P 1.5KVDC, H: I/P-O/P 3KVDC		
	ISOLATION RESISTANCE	I/P-O/P:100M Ohms / 500VDC / 25℃/ 70% RH		
	ISOLATION CAPACITANCE (Typ.)	1000pF		
	EMC EMISSION	**Parameter**	**Standard**	**Test Level / Note**
		Conducted	BS EN/EN55032	Class B with external components
		Radiated	BS EN/EN55032	Class B with external components
	EMC IMMUNITY	**Parameter**	**Standard**	**Test Level / Note**
		ESD	BS EN/EN61000-4-2	Level 2, ±8KV air, ±4KV contact
		Radiated Susceptibility	BS EN/EN61000-4-3	Level 2, 3V/m
		EFT/Bursts	BS EN/EN61000-4-4	Level 1, 0.5KV
		Surge	BS EN/EN61000-4-5	Level 1, 0.5KV Line-Line
		Conducted	BS EN/EN61000-4-6	Level 2, 3V(e.m.f.)
	RAILWAY STANDARD	EN50155 including EN61373 for shock & vibration, EN50121-3-2 for EMC		
OTHERS	MTBF	F/G: 720Khrs ; H: 880Khrs MIL-HDBK-217F(25℃)		
	DIMENSION (L*W*H)	50.8*25.4*10.2mm (2*1*0.4 inch)		
	CASE MATERIAL	Black coated copper with Non-Conductive Base		
	PACKING	35g ; 12pcs/per tube, 300pcs/25 tube/per carton		
NOTE	1.All parameters are specified at normal input(F:24Vdc, G:48Vdc, H:110Vdc), rated load, 25℃ 70% RH ambient. 2.Ripple & noise are measured at 20MHz by using a 12" twisted pair terminated with a 0.1μf & 47μf capacitor. 3.Line regulation is measured from low line to high line at rated load. 4.Load regulation is measured from 0% to 100% rated load. 5.The final equipment must be re-confirm that it still meet EMC directives. For guidance on how to perform these EMC tests, please refer to “EMI testing of component power supplies.”(as available on http://www.meanwell.com) ※ Product Liability Disclaimer ： For detailed information, please refer to https://www.meanwell.com/serviceDisclaimer.aspx			

chanhvinh.com

■ External Output Trimming

In order to trim the voltage up or down one needs to connect the trim resistor either between the trim pin and -Vo for trim-up and between trim pin and +Vo for trim-down. The output voltage trim range is ±10%. This is shown in Figures 1 and 2:

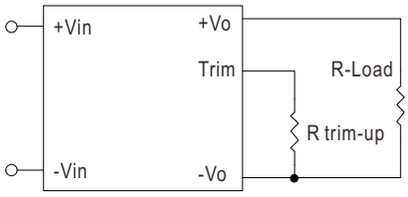

Figure 1. Trim-up Voltage Setup

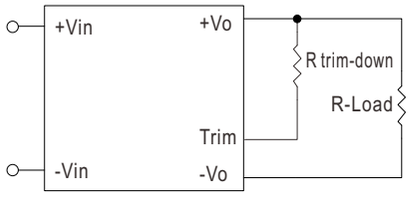

Figure 2. Trim-down Voltage Setup

1. The value of Rtrim-up defined as:

$$R_{trim-up} = \left(\frac{V_r \times R1 \times (R2 + R3)}{(V_o - V_{o,nom}) \times R2}\right) - Rt\,(K\Omega)$$

Where

$R_{trim-up}$ is the external resistor in Kohm.

$V_{o,nom}$ is the nominal output voltage.

V_o is the desired output voltage.

R1, Rt, R2, R3 and Vr are internal to the unit and are defined in Table 1.

For example, to trim-up the output voltage of 5.0V module (RSDW20F-05) by 10% to 5.5V, R trim-up is calculated as follows:

$V_o - V_{o,nom} = 5.5 - 5.0 = 0.5V$

R1 = 2.32 KΩ

R2 = 2.32 KΩ

R3 = 0 KΩ

Rt = 8.2 KΩ

Vr = 2.5V

$$R_{trim-up} = \left(\frac{2.5 \times 2.32 \times (2.32+0)}{0.5 \times 2.32}\right) - 8.2 = 3.4(K\Omega)$$

Table 1 – Trim up and Trim down Resistor Values

Model Number	Output Voltage(V)	R1 (KΩ)	R2 (KΩ)	R3 (KΩ)	Rt (KΩ)	Vr (V)
RSDW20F-03 RSDW20G-03	3.3	2.74	1.8	0.27	9.1	1.24
RSDW20F-05 RSDW20G-05 RSDW20H-05	5.0	2.32	2.32	0	8.2	2.5
RSDW20F-12 RSDW20G-12 RSDW20H-12	12.0	6.8	2.4	2.32	22	2.5
RSDW20F-15 RSDW20G-15 RSDW20H-15	15.0	8.06	2.4	3.9	27	2.5

2. The value of Rtrim-down defined as:

$$R_{trim-down} = R1 \times \left(\frac{V_r \times R1}{(V_{o,nom} - V_o) \times R2} - 1\right) - Rt\,(K\Omega)$$

Where

$R_{trim-down}$ is the external resistor in Kohm.

$V_{o,nom}$ is the nominal output voltage.

V_o is the desired output voltage.

R1, Rt, R2, R3 and Vr are internal to the unit and are defined in Table 1.

For example, to trim-down the output voltage of 5.0V module (RSDW20F-05) by 10% to 4.5V, R trim-down is calculated as follows:

$V_{o,nom} - V_o = 5.0 - 4.5 = 0.5V$

R1 = 2.32 KΩ

R2 = 2.32 KΩ

R3 = 0 KΩ

Rt = 8.2 KΩ

Vr = 2.5V

$$R_{trim-down} = 2.32 \times \left(\frac{2.5 \times 2.32}{0.5 \times 2.32} - 1\right) - 8.2 = 1.08\,(K\Omega)$$

chanhvinh.com

■ Mechanical Specification

- All dimensions in mm(inch)
- Tolerance:x.x±0.5mm(x.xx±0.02")
  x.xx±0.25mm(x.xxx±0.010")
- Pin size is:0.5±0.05mm (0.02" ±0.002")

※F models(9~36Vin) and G models(18~75Vin):

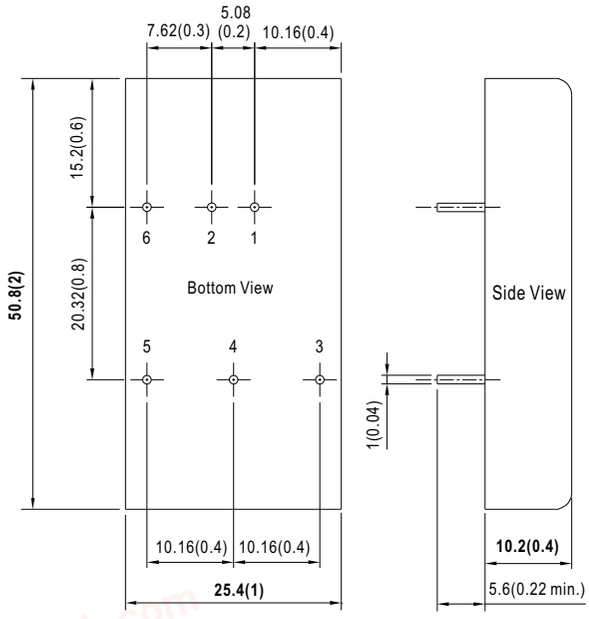

■ Plug Assignment

Pin-Out		
Pin No.	RSDW20F/G (Single output)	RDDW20F/G (Dual output)
1	+Vin	+Vin
2	-Vin	-Vin
3	+Vout	+Vout
4	Trim	Common
5	-Vout	-Vout
6	Remote ON/OFF	Remote ON/OFF

※H models(43~160Vin):

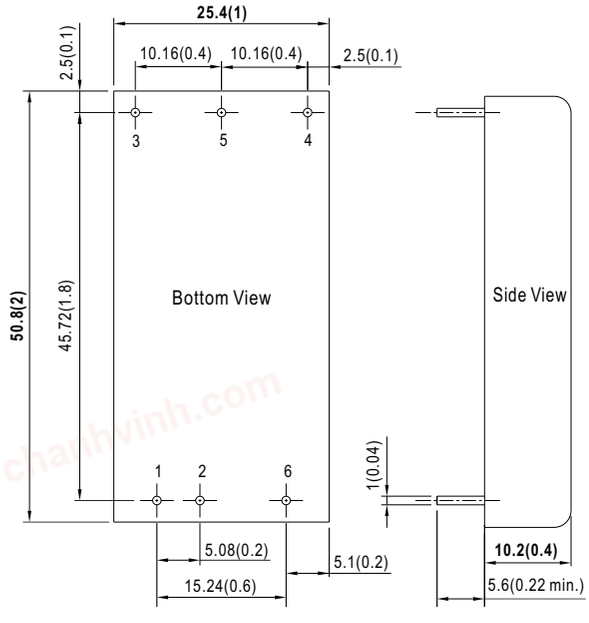

Pin-Out		
Pin No.	RSDW20H (Single output)	RDDW20H (Dual output)
1	+Vin	+Vin
2	-Vin	-Vin
3	+Vout	+Vout
4	Trim	-Vout
5	-Vout	Common
6	Remote ON/OFF	Remote ON/OFF

chanhvinh.com

■ Derating Curve

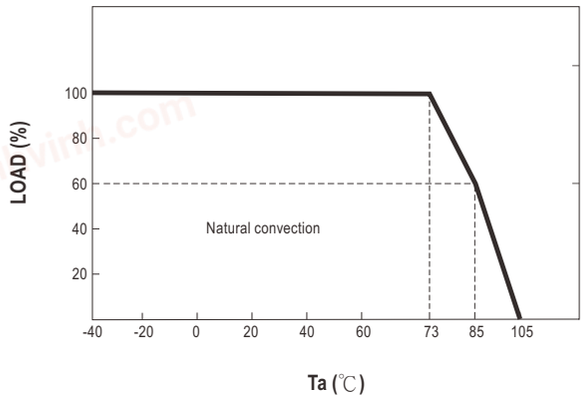

■ EMC Suggestion Circuit

F models(9~36Vin) and G models(18~75Vin):

※Comply to BS EN/EN55032 conducted Class A without additional componets, required external componets to meet BS EN/EN55032 conducted Class B emission are as below:

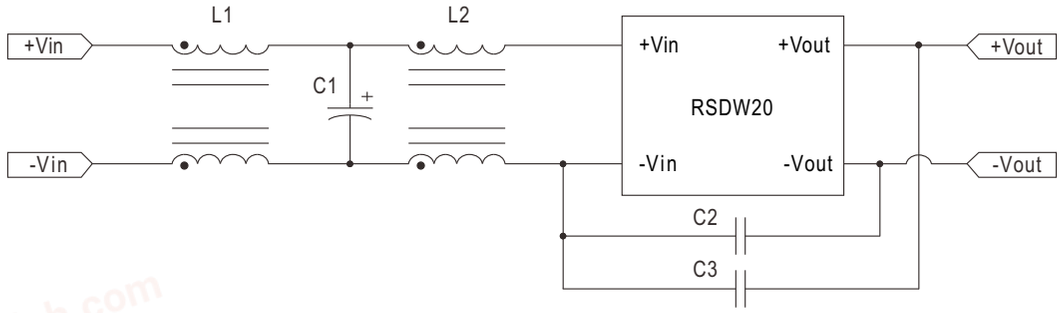

Model No.	BS EN/EN55032 Class B				
	C1	C2	C3	L1	L2
RSDW20F-03	220μF/50V KY	1000pF/2KV	1000pF/2KV	SHORT	1.2mH
RSDW20F-05	220μF/50V KY	1000pF/2KV	1000pF/2KV	SHORT	1.2mH
RSDW20F-12	220μF/50V KY	1000pF/2KV	1000pF/2KV	SHORT	1.2mH
RSDW20F-15	220μF/50V KY	1000pF/2KV	1000pF/2KV	SHORT	1.2mH
RSDW20G-03	220μF/100V PW	1000pF/2KV	1000pF/2KV	0.15mH	1.2mH
RSDW20G-05	220μF/100V PW	1000pF/2KV	1000pF/2KV	0.15mH	1.2mH
RSDW20G-12	220μF/100V PW	1000pF/2KV	1000pF/2KV	0.15mH	1.2mH
RSDW20G-15	220μF/100V PW	1000pF/2KV	1000pF/2KV	0.15mH	1.2mH

Note: C1 is NIPPON-CHEMICON KY series or NICHICON PW series aluminum capacitor
C2, C3 are ceramic capacitors

※Required external componets to meet BS EN/EN55032 conducted Class A emission are as below:

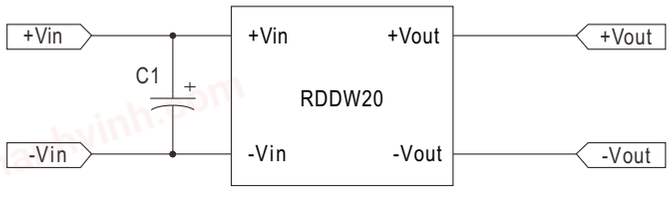

Model No.	BS EN/EN55032 Class A
	C1
RDDW20F-05	10μF/50V/MLCC 1210
RDDW20F-12	10μF/50V/MLCC 1210
RDDW20F-15	10μF/50V/MLCC 1210
RDDW20G-05	NC
RDDW20G-12	NC
RDDW20G-15	NC

chanhvinh.com

H models(43~160Vin):

※Comply to BS EN/EN55032 conducted Class A without additional componets are as below:

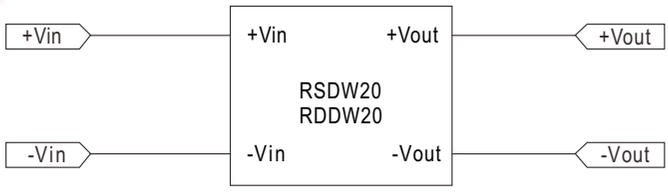

※Required external componets to meet BS EN/EN50121-3-2(BS EN/EN55011 Class A conducted & Radiated Emission) are as below:

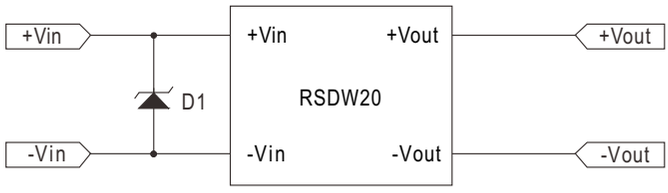

Model No.	D1
RSDW20H-05	P6KE180A Littelfuse
RSDW20H-12	P6KE180A Littelfuse
RSDW20H-15	P6KE180A Littelfuse

chanhvinh.com

■ Packing

Standard Tube Packing	MPQ Per Tube (PCS)	One Tube G.W.	Max. Q'TY/ Carton(PCS)	One Carton G.W.
Unit : mm 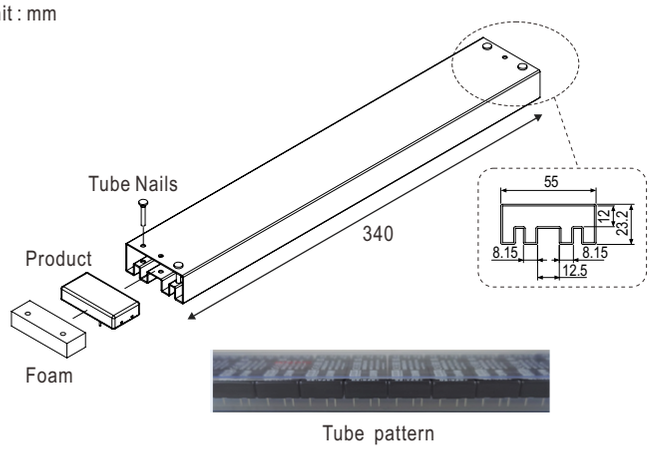 Tube pattern 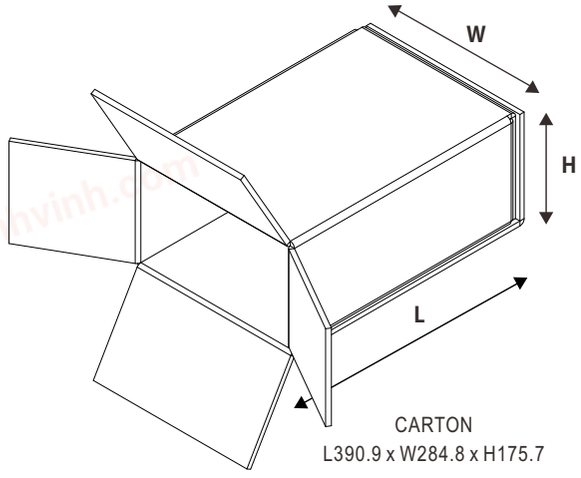 CARTON L390.9 x W284.8 x H175.7	12	498g	300	14.45Kg

■ Installation Manual

Please refer to : http://www.meanwell.com/manual.html