chanhvinh.com

MEAN WELL 60~75W Constant Current Mode LED Driver ELG-75-C series

User's Manual



IS 15885(Part 2/Sec13)
R-41027766
(Please refer safety description)

(for DA-Type only)

IP65 IP67

Type HL

Features

- Constant Current mode output
- Metal housing design with functional Ground
- Built-in active PFC function
- No load / Standby power consumption <0.5W
- IP67 / IP65 rating for indoor or outdoor installations
- Function options: output adjustable via potentiometer; 3 in 1 dimming (dim-to-off); Smart timer dimming; DALI
- Typical lifetime>50000 hours
- 5 years warranty

Applications

- LED street lighting
- LED harbor lighting
- LED bay lighting
- LED greenhouse lighting
- LED flood lighting
- Type "HL" for use in Class I, Division 2 hazardous (Classified) location.

GTIN CODE

MW Search: https://www.meanwell.com/serviceGTIN.aspx

Description

ELG-75-C series is a 75W LED AC/DC driver featuring the constant current mode and high voltage output. ELG-75-C operates from 100~305VAC and offers models with different rated current ranging between 350mA and 1400mA. Thanks to the high efficiency up to 91%, with the fanless design, the entire series is able to operate for -40℃~+85℃ case temperature under free air convection. The design of metal housing and IP67/IP65 ingress protection level allows this series to fit both indoor and outdoor applications. ELG-75-C is equipped with various function options, such as dimming methodologies, so as to provide the optimal design flexibility for LED lighting system.

Model Encoding

ELG - 75 - C500 A -

- Input wiring type { Blank:2-wire input for standard model / 3Y:3-wire input for standard model
- Function options
- Rated output current (350/500/700/1050/1400mA)
- Output wattage
- Series name

Type	IP Level	Function	Note
Blank	IP67	Io fixed.	In Stock
A	IP65	Io adjustable through built-in potentiometer.	In Stock
B	IP67	3 in 1 dimming function (0~10Vdc, 10V PWM signal and resistance)	In Stock
AB	IP65	Io adjustable through built-in potentiometer & 3 in 1 dimming function (0~10Vdc, 10V PWM signal and resistance)	In Stock
DA	IP67	DALI control technology.	In Stock
Dx	IP67	Built-in Smart timer dimming function by user request.	By request
D2	IP67	Built-in Smart timer dimming and programmable function.	In Stock

chanhvinh.com

60~75W Constant Current Mode LED Driver ELG-75-C series

SPECIFICATION

MODEL		ELG-75-C350 □	ELG-75-C500 □	ELG-75-C700 □	ELG-75-C1050 □	ELG-75-C1400 □
OUTPUT	RATED CURRENT	350mA	500mA	700mA	1050mA	1400mA
	RATED POWER Note.5	200VAC ~ 305VAC				
		74.9W	75W	74.9W	74.55W	75.6W
		100VAC ~ 180VAC				
		59.85W	60W	59.5W	59.85W	60.2W
	CONSTANT CURRENT REGION Note.2	107 ~ 214V	75 ~ 150V	53 ~ 107V	35 ~ 71V	27 ~ 54V
	OPEN CIRCUIT VOLTAGE(max.)	224V	158V	114V	78V	61V
	CURRENT ADJ. RANGE	Adjustable for A/AB-Type only (via built-in potentiometer)				
		175 ~ 350mA	250 ~ 500mA	350 ~ 700mA	525 ~ 1050mA	700 ~ 1400mA
	CURRENT RIPPLE	5.0% max. @rated current				
	CURRENT TOLERANCE	±5.0%				
	SET UP TIME Note.4	500ms/115VAC,230VAC				
INPUT	VOLTAGE RANGE Note.3	100 ~ 305VAC 142 ~ 431VDC (Please refer to "STATIC CHARACTERISTIC" section)				
	FREQUENCY RANGE	47 ~ 63Hz				
	POWER FACTOR (Typ.)	PF≧0.97/115VAC, PF≧0.95/230VAC, PF≧0.92/277VAC@full load (Please refer to "POWER FACTOR (PF) CHARACTERISTIC" section)				
	TOTAL HARMONIC DISTORTION	THD< 20%(@load≧50%/115VC,230VAC; @load≧75%/277VAC) (Please refer to "TOTAL HARMONIC DISTORTION(THD)" section)				
	EFFICIENCY (Typ.)	91%	91%	91%	90%	90%
	AC CURRENT (Typ.)	0.7A / 115VAC 0.45A / 230VAC 0.38A/277VAC				
	INRUSH CURRENT(Typ.)	COLD START 50A(twidth=350μs measured at 50% Ipeak)/230VAC; Per NEMA 410				
	MAX. No. of PSUs on 16A CIRCUIT BREAKER	5 units (circuit breaker of type B) / 8 units (circuit breaker of type C) at 230VAC				
	LEAKAGE CURRENT	<0.75mA / 277VAC				
	NO LOAD / STANDBY POWER CONSUMPTION	No load power consumption <0.5W for Blank / A / Dx / D2-Type Standby power consumption <0.5W for B / AB / DA -Type				
PROTECTION	SHORT CIRCUIT	Hiccup mode, recovers automatically after fault condition is removed				
	OVER VOLTAGE	225 ~ 260V	160 ~ 190V	115 ~ 140V	80 ~ 100V	64 ~ 79V
		Shut down o/p voltage, re-power on to recover				
	OVER TEMPERATURE	Shut down o/p voltage, re-power on to recover				
ENVIRONMENT	WORKING TEMP.	Tcase=-40 ~ +85℃ (Please refer to " OUTPUT LOAD vs TEMPERATURE" section)				
	MAX. CASE TEMP.	Tcase=+85℃				
	WORKING HUMIDITY	20 ~ 95% RH non-condensing				
	STORAGE TEMP., HUMIDITY	-40 ~ +80℃, 10 ~ 95% RH				
	TEMP. COEFFICIENT	±0.03%/℃ (0 ~ 60℃)				
	VIBRATION	10 ~ 500Hz, 5G 12min./1cycle, period for 72min. each along X, Y, Z axes				
SAFETY & EMC	SAFETY STANDARDS	UL8750(type"HL"), CSA C22.2 No. 250.13-12;BS EN/EN/AS/NZS 61347-1, BS EN/EN/AS/NZS 61347-2-13 independent, BS EN/EN62384;EAC TP TC 004;BIS IS15885(for 700A/700B/700DA/1050A only);IP65 or IP67; GB19510.1, GB19510.14;KC61347-1,KC61347-2-13 approved				
	DALI STANDARDS	Compliance to IEC62386-101,102,(207 by request) for DA Type only				
	WITHSTAND VOLTAGE	I/P-O/P:3.75KVAC I/P-FG:2.0KVAC O/P-FG:1.5KVAC				
	ISOLATION RESISTANCE	I/P-O/P, I/P-FG, O/P-FG:100M Ohms / 500VDC / 25℃/ 70% RH				
	EMC EMISSION	Compliance to BS EN/EN55015,BS EN/EN61000-3-2 Class C (@load≧50%) ; BS EN/EN61000-3-3; GB17743, GB17625.1;EAC TP TC 020; KC KN15 , KN61547				
	EMC IMMUNITY	Compliance to BS EN/EN61000-4-2,3,4,5,6,8,11; BS EN/EN61547, light industry level(surge immunity:Line-Earth: 6KV,Line-Line:4KV); EAC TP TC 020; KC KN15 , KN61547				
OTHERS	MTBF	3523.7K hrs min. Telcordia SR-332 (Bellcore) 305.3Khrs min. MIL-HDBK-217F (25℃)				
	DIMENSION	180*63*35.5 mm (L*W*H)				
	PACKING	0.8Kg;16pcs/13.4Kg/0.67CUFT				

NOTE

1. All parameters NOT specially mentioned are measured at 230VAC input, rated current and 25℃ of ambient temperature.
2. Please refer to "DRIVING METHODS OF LED MODULE".
3. De-rating may be needed under low input voltages. Please refer to "STATIC CHARACTERISTIC" sections for details.
4. Length of set up time is measured at first cold start. Turning ON/OFF the driver may lead to increase of the set up time.
5. The driver is considered as a component that will be operated in combination with final equipment. Since EMC performance will be affected by the complete installation, the final equipment manufacturers must re-qualify EMC Directive on the complete installation again.
6. This series meets the typical life expectancy of >50,000 hours of operation when Tcase, particularly (tc) point (or TMP, per DLC), is about 80℃ or less.
7. Please refer to the warranty statement on MEAN WELL's website at http://www.meanwell.com
8. The ambient temperature derating of 3.5℃/1000m with fanless models and of 5℃/1000m with fan models for operating altitude higher than 2000m(6500ft).
9. For any application note and IP water proof function installation caution, please refer our user manual before using. https://www.meanwell.com/Upload/PDF/LED_EN.pdf
10. To fulfill requirements of the latest ErP regulation for lighting fixtures, this LED power supply can only be used behind a switch without permanently connected to the mains.

※ Product Liability Disclaimer : For detailed information, please refer to https://www.meanwell.com/serviceDisclaimer.aspx

chanhvinh.com

■ BLOCK DIAGRAM

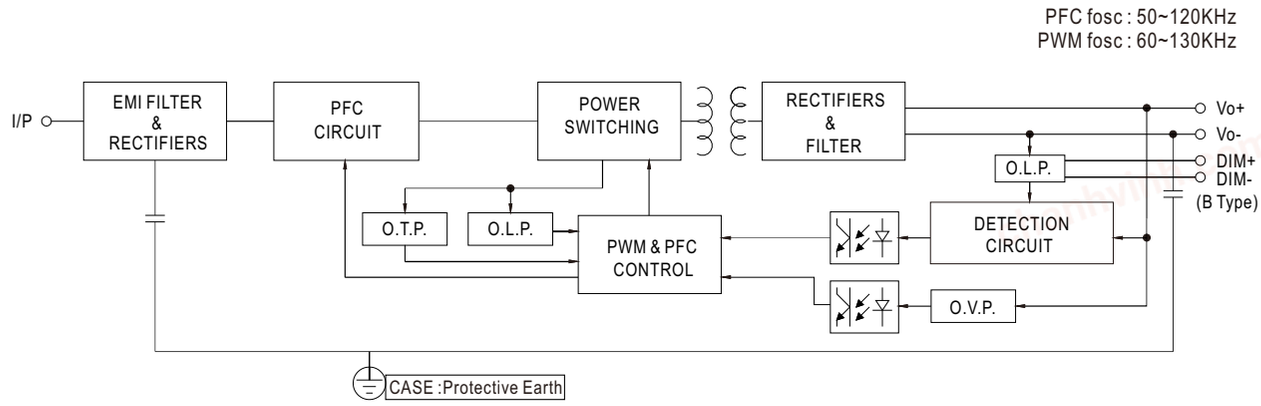

■ DRIVING METHODS OF LED MODULE

※ This series works in constant current mode to directly drive the LEDs.

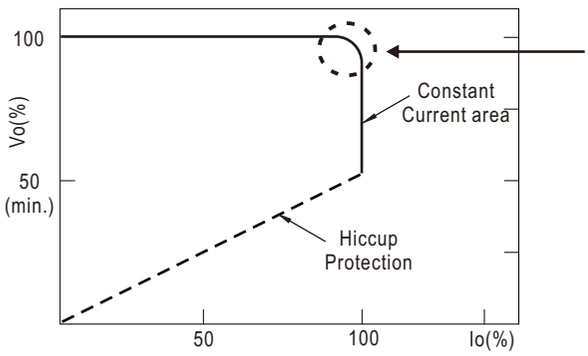

Typical output current normalized by rated current (%)

In the constant current region, the highest voltage at the output of the driver depends on the configuration of the end systems.

Should there be any compatibility issues, please contact MEAN WELL.

chanhvinh.com

■ DIMMING OPERATION

※ **3 in 1 dimming function (for B/AB-Type)**

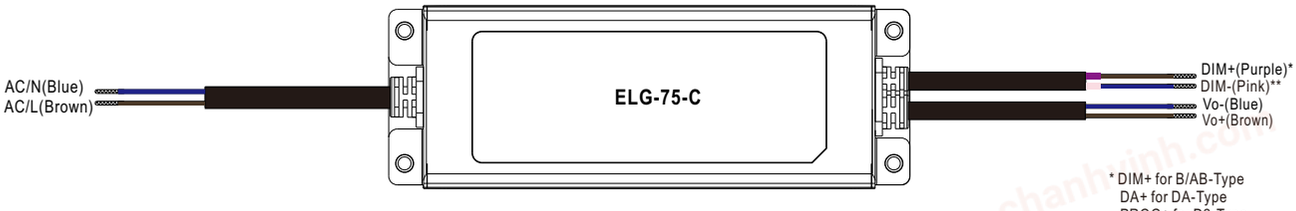

* DIM+ for B/AB-Type
DA+ for DA-Type
PROG+ for D2-Type
** DIM- for B/AB-Type
DA- for DA-Type
PROG- for D2-Type

- Output constant current level can be adjusted by applying one of the three methodologies between DIM+ and DIM-: 0 ~ 10VDC, or 10V PWM signal or resistance.
- Direct connecting to LEDs is suggested. It is not suitable to be used with additional drivers.
- Dimming source current from power supply: 100μA (typ.)

◎ Applying additive 0 ~ 10VDC

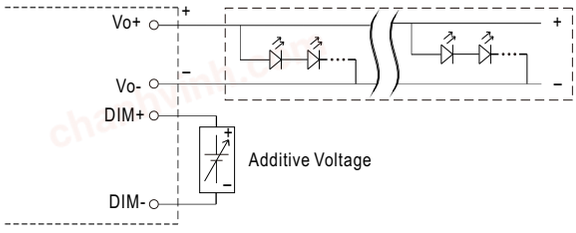

"DO NOT connect "DIM- to Vo-"

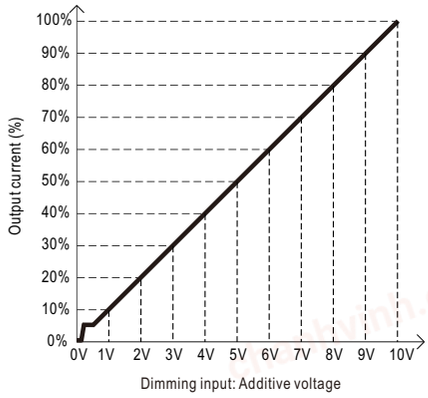

◎ Applying additive 10V PWM signal (frequency range 100Hz ~ 3KHz):

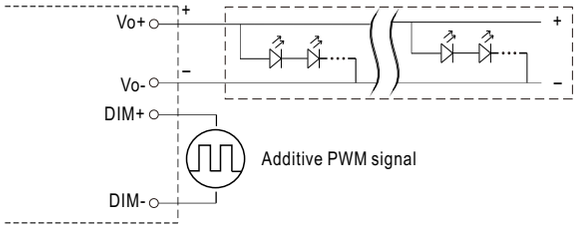

"DO NOT connect "DIM- to Vo-"

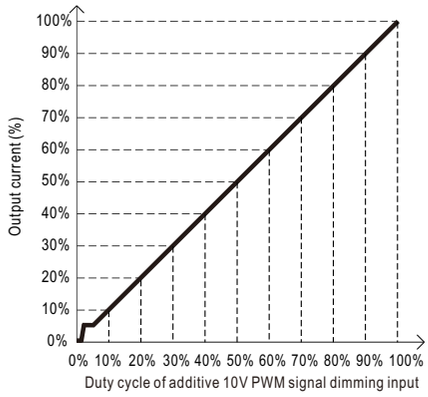

◎ Applying additive resistance:

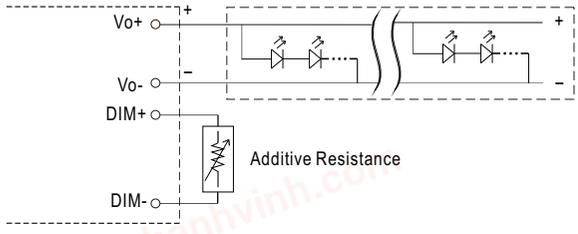

"DO NOT connect "DIM- to Vo-"

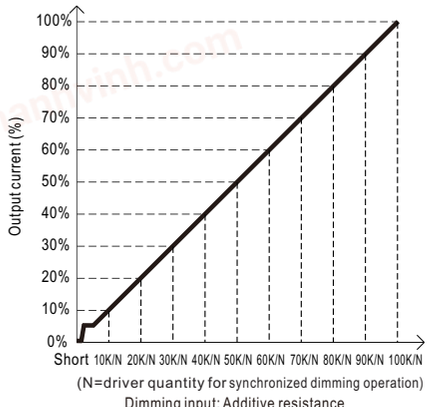

Note : 1. Min. dimming level is about 8% and the output current is not defined when 0%< Iout<8%.
2. The output current could drop down to 0% when dimming input is about 0kΩ or 0Vdc, or 10V PWM signal with 0% duty cycle.

chanhvinh.com

※ **DALI Interface (primary side; for DA-Type)**

- Apply DALI signal between DA+ and DA-.
- DALI protocol comprises 16 groups and 64 addresses.
- First step is fixed at 8% of output.

※ **Smart timer dimming function (for Dxx-Type by User definition)**

MEAN WELL Smart timer dimming primarily provides the adaptive proportion dimming profile for the output constant current level to perform up to 14 consecutive hours. 3 dimming profiles hereunder are defined accounting for the most frequently seen applications. If other options may be needed, please contact MEAN WELL for details.

Ex : ◎ D01-Type: the profile recommended for residential lighting

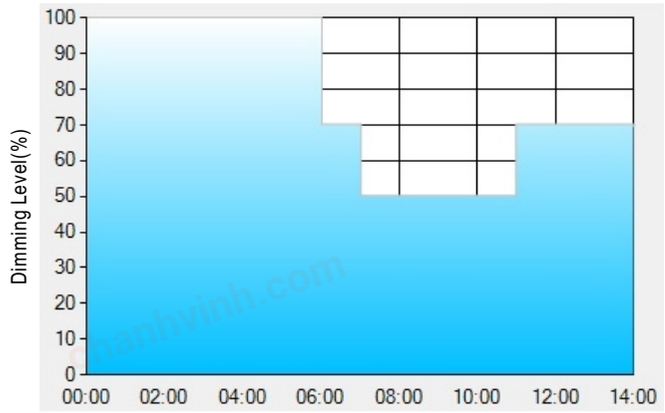

Set up for D01-Type in Smart timer dimming software program:

	T1	T2	T3	T4
TIME**	06:00	07:00	11:00	---
LEVEL**	100%	70%	50%	70%

**: TIME matches Operating Time in the diagram whereas LEVEL matches Dimming Level.

Example: If a residential lighting application adopts D01-Type, when turning on the power supply at 6:00pm, for instance:

[1] The power supply will switch to the constant current level at 100% starting from 6:00pm.

[2] The power supply will switch to the constant current level at 70% in turn, starting from 0:00am, which is 06:00 after the power supply turns on.

[3] The power supply will switch to the constant current level at 50% in turn, starting from 1:00am, which is 07:00 after the power supply turns on.

[4] The power supply will switch to the constant current level at 70% in turn, starting from 5:00am, which is 11:00 after the power supply turns on. The constant current level remains till 8:00am, which is 14:00 after the power supply turns on.

Ex: ◎ D02-Type: the profile recommended for street lighting

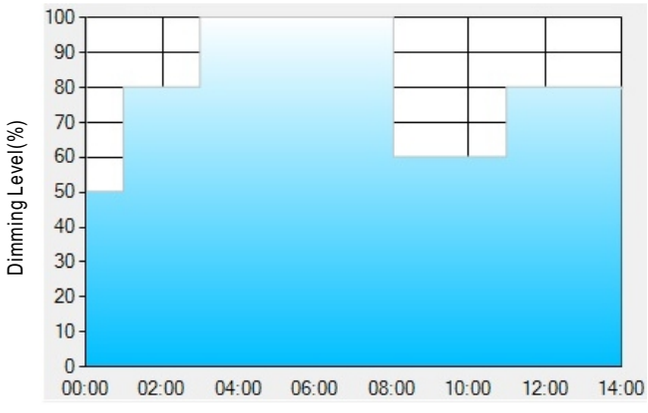

Set up for D02-Type in Smart timer dimming software program:

	T1	T2	T3	T4	T5
TIME**	01:00	03:00	8:00	11:00	---
LEVEL**	50%	80%	100%	60%	80%

**: TIME matches Operating Time in the diagram whereas LEVEL matches Dimming Level.

Example: If a street lighting application adopts D02-Type, when turning on the power supply at 5:00pm, for instance:

[1] The power supply will switch to the constant current level at 50% starting from 5:00pm.

[2] The power supply will switch to the constant current level at 80% in turn, starting from 6:00pm, which is 01:00 after the power supply turns on.

[3] The power supply will switch to the constant current level at 100% in turn, starting from 8:00pm, which is 03:00 after the power supply turns on.

[4] The power supply will switch to the constant current level at 60% in turn, starting from 1:00am, which is 08:00 after the power supply turns on.

[5] The power supply will switch to the constant current level at 80% in turn, starting from 4:00am, which is 11:00 after the power supply turns on. The constant current level remains till 6:30am, which is 14:00 after the power supply turns on.

chanhvinh.com

Ex: ◎ D03-Type: the profile recommended for tunnel lighting

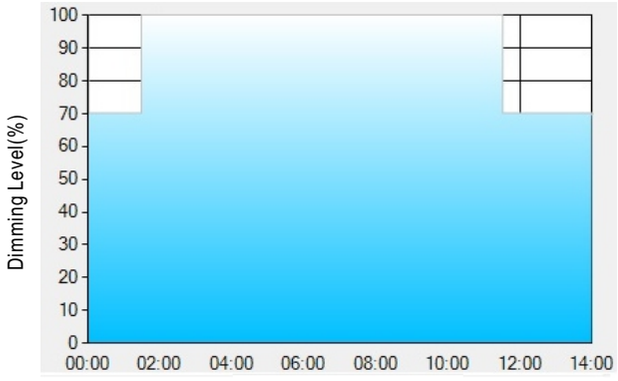

Set up for D03-Type in Smart timer dimming software program:

	T1	T2	T3
TIME**	01:30	11:00	---
LEVEL**	70%	100%	70%

**: TIME matches Operating Time in the diagram whereas LEVEL matches Dimming Level.
Example: If a tunnel lighting application adopts D03-Type, when turning on the power supply at 4:30pm, for instance:
[1] The power supply will switch to the constant current level at 70% starting from 4:30pm.
[2] The power supply will switch to the constant current level at 100% in turn, starting from 6:00pm, which is 01:30 after the power supply turns on.
[3] The power supply will switch to the constant current level at 70% in turn, starting from 5:00am, which is 11:00 after the power supply turns on.
The constant current level remains till 6:30am, which is 14:00 after the power supply turns on.

chanhvinh.com

■ OUTPUT LOAD vs TEMPERATURE(Note.7)

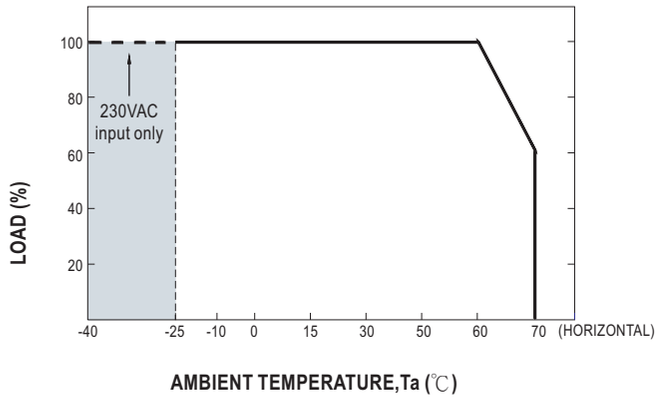

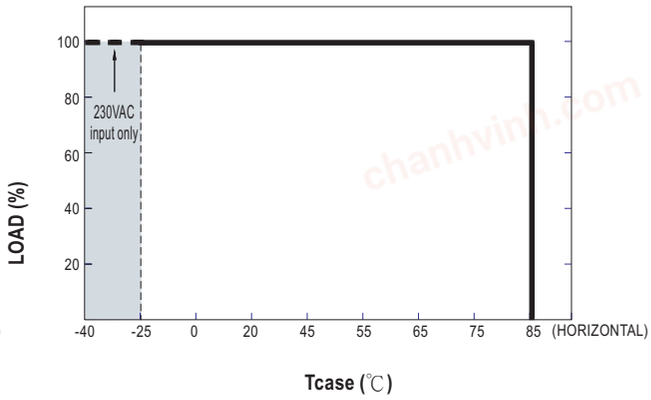

■ STATIC CHARACTERISTIC

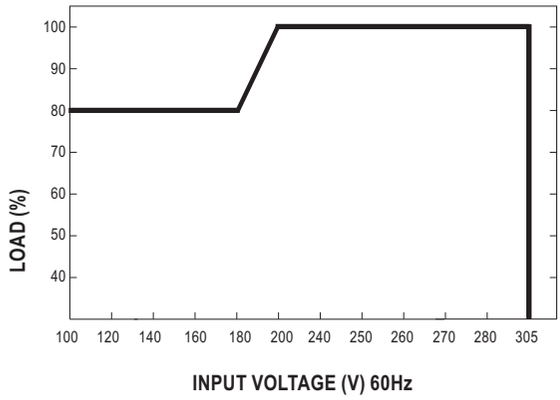

※ De-rating is needed under low input voltage.

■ POWER FACTOR (PF) CHARACTERISTIC

※ Tcase at 75℃

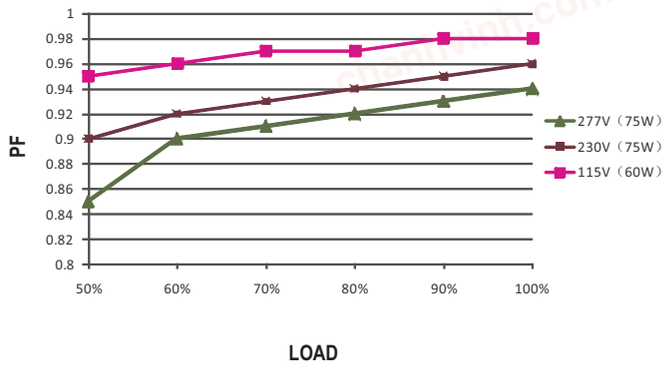

■ TOTAL HARMONIC DISTORTION (THD)

※ 350mA Model, Tcase at 75℃

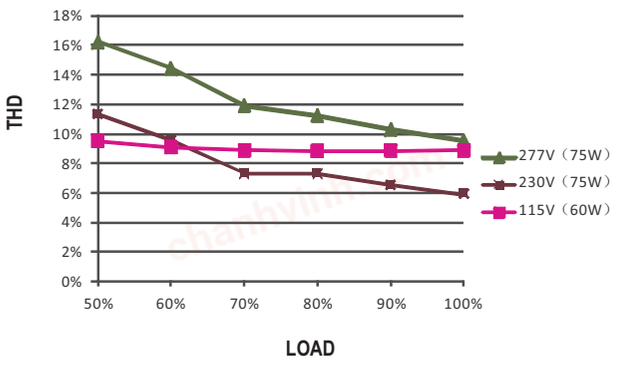

■ EFFICIENCY vs LOAD

ELG-75-C series possess superior working efficiency that up to 91% can be reached in field applications.

※ 350mA Model, Tcase at 75℃

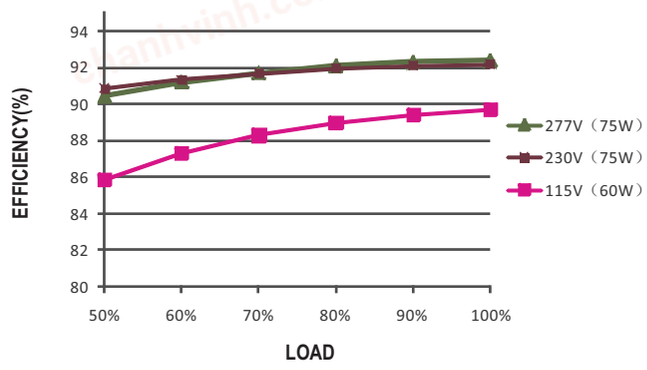

chanhvinh.com

LIFE TIME

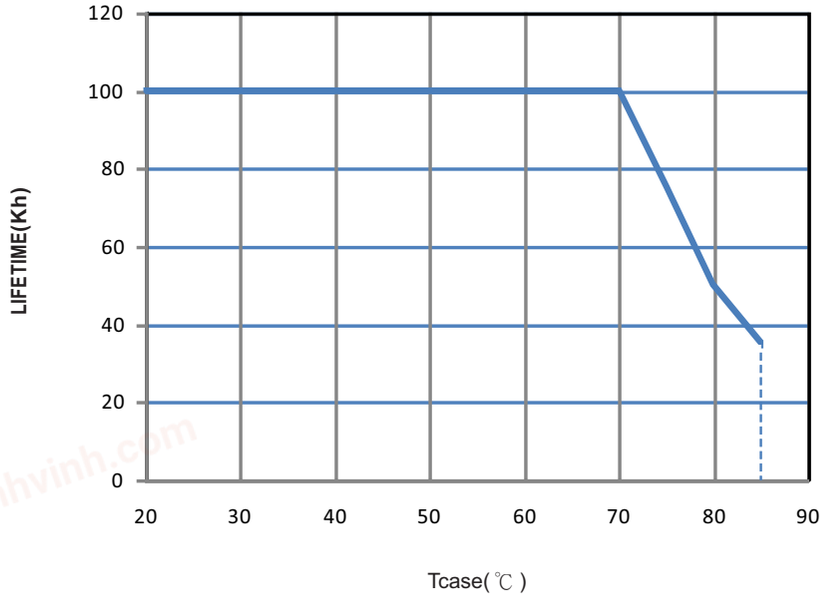

chanhvinh.com

■ MECHANICAL SPECIFICATION

※ **Blank-Type**

CASE NO.: 243A Unit:mm

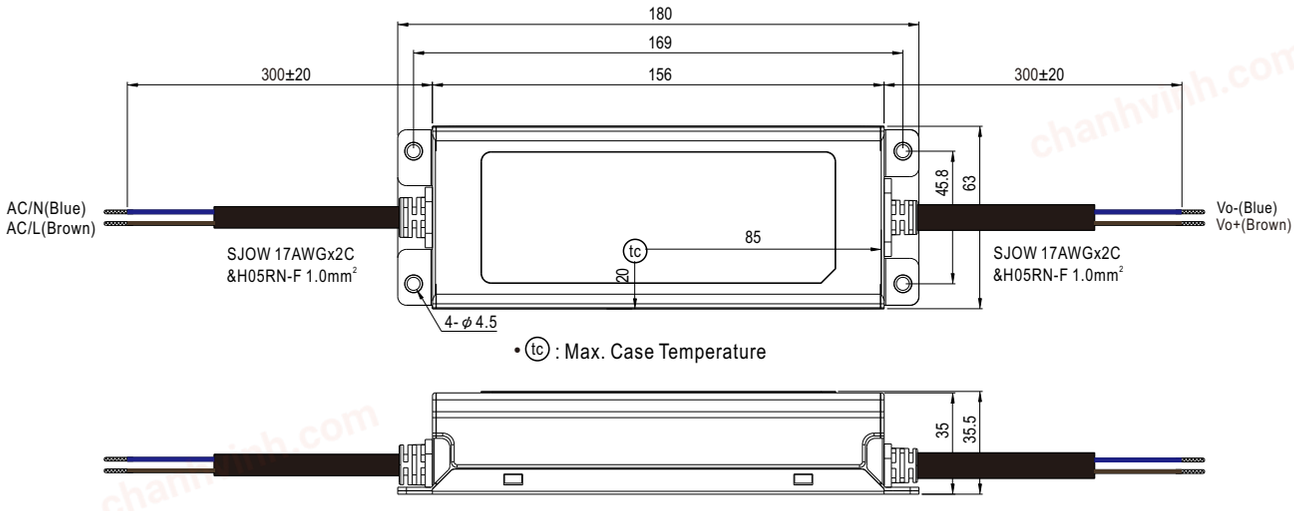

• tc : Max. Case Temperature

※ **A-Type**

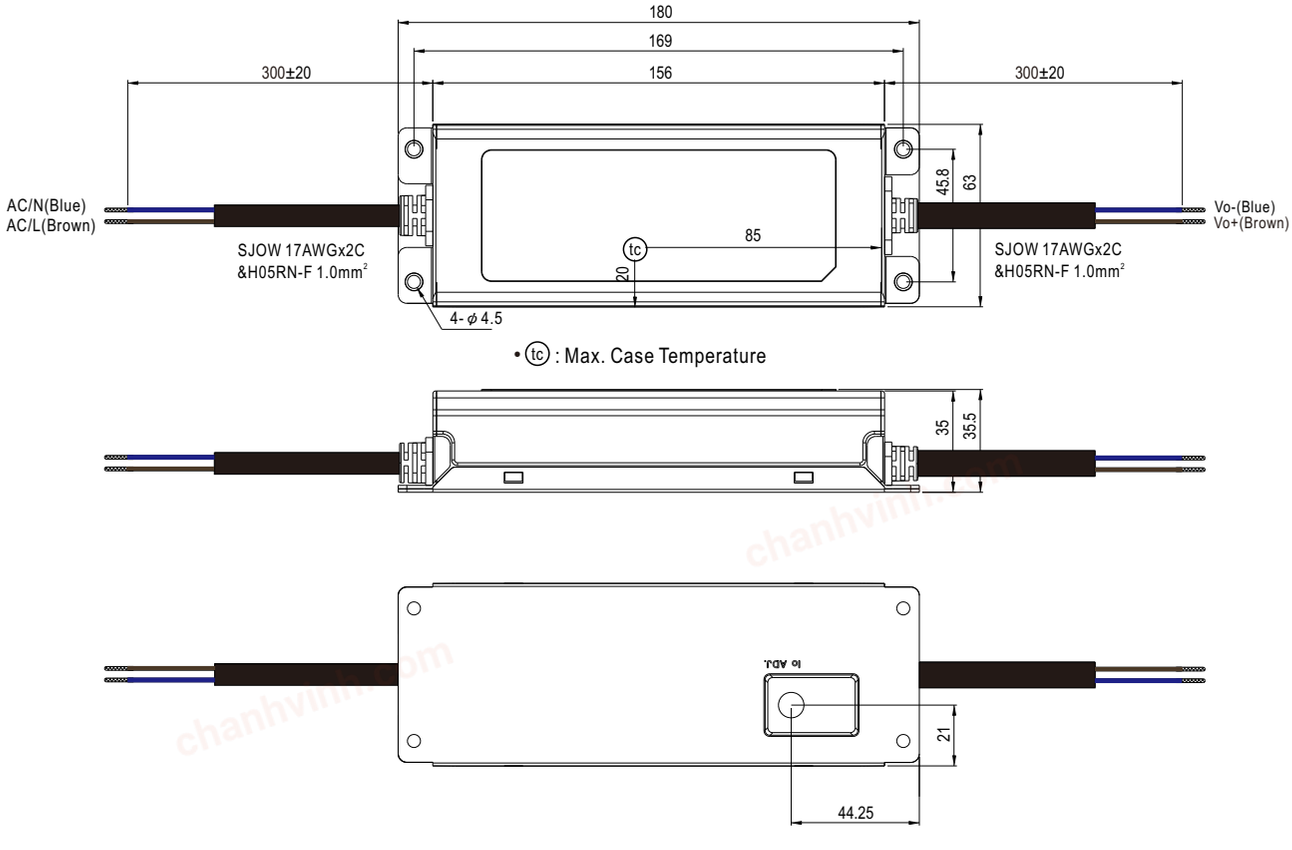

• tc : Max. Case Temperature

chanhvinh.com

60~75W Constant Current Mode LED Driver ELG-75-C series

※ **AB-Type**

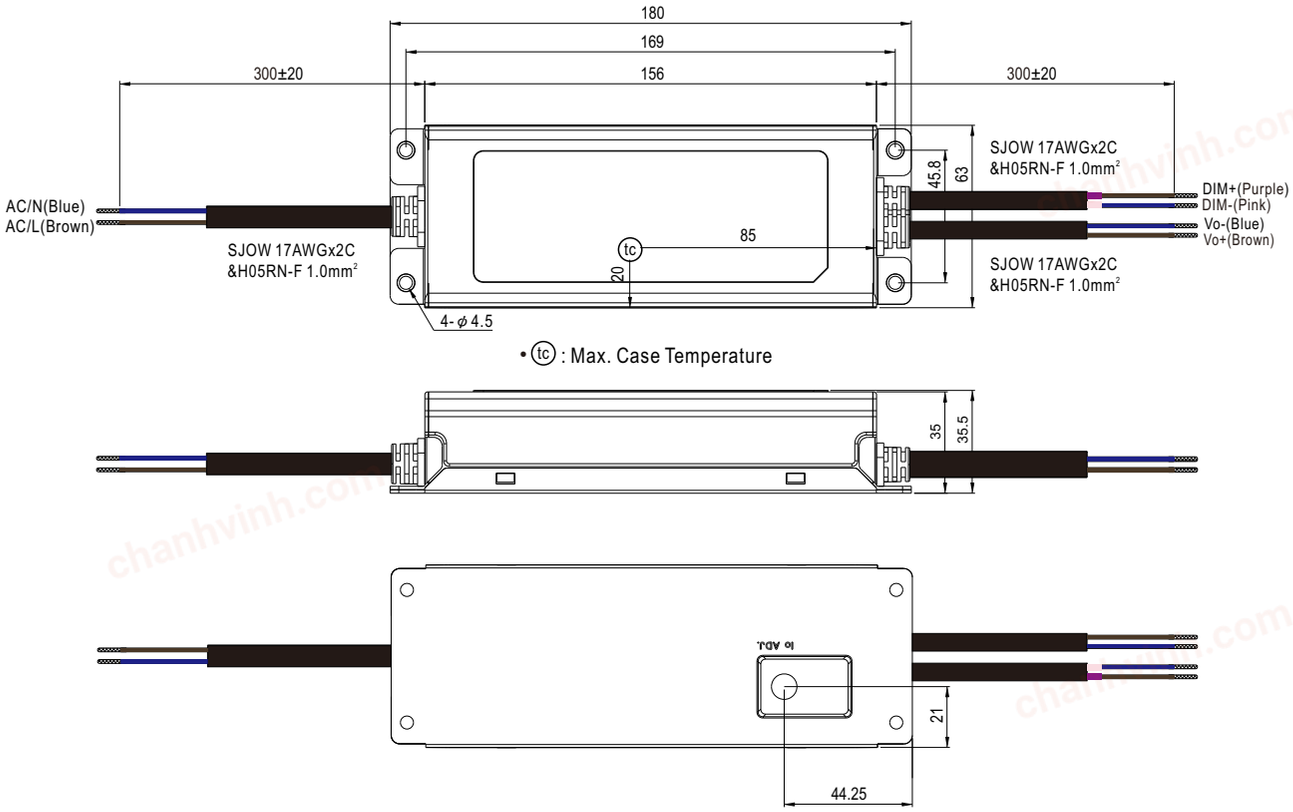

※ **B/DA/D2-Type**

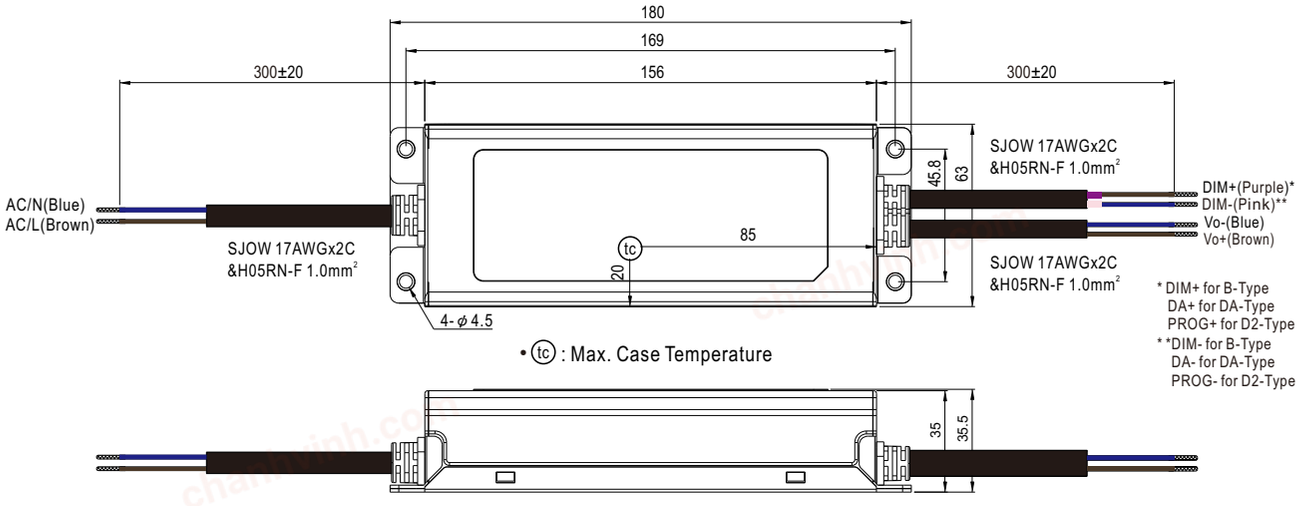

chanhvinh.com

※ **3Y Model (3-wire input)**

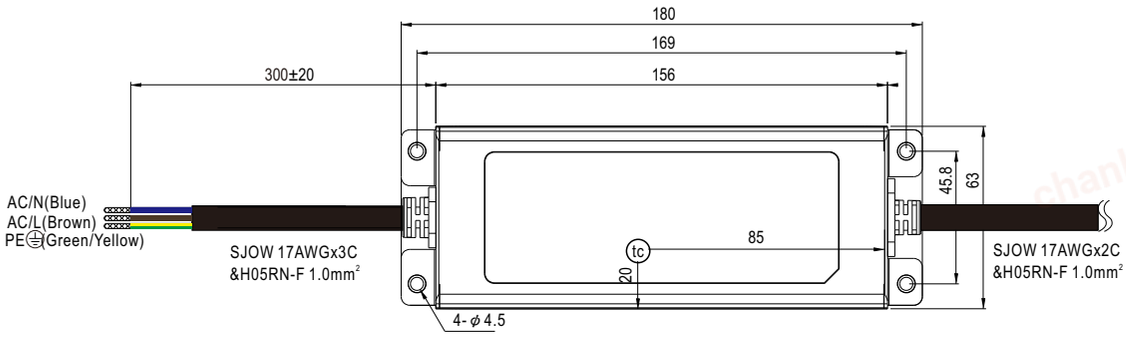

• tc : Max. Case Temperature

◎ Note1: Please connect the case to PE for the complete EMC deliverance and safety use.

◎ Note2: Please contact MEAN WELL for input wiring option with PE.

■ Installation Manual

Please refer to : http://www.meanwell.com/manual.html