chanhvinh.com

Lovato electric
ENERGY AND AUTOMATION

M2RA

EMPTY NON-METALLIC ENCLOSURE, WITH RESET BUTTON, FOR BF09A, BF12A, BF18A, BF25A, BF26A, BF32A CONTACTORS



Product designation			Empty enclosures
Product type designation			M2RA
Electrical features			
Maximum operating current (≤440V)		A	32
Components			
Contactor standard supplied			BF25A, BF26A, BF32A
Thermal relay to purchase separately			RF38
Mechanical features			
Weight		g	670
Ambient conditions			
Operating temperature			
	min	°C	-25
	max	°C	+60
Storage temperature			
	min	°C	-40
	max	°C	+70
Resistance & Protection			
Frontal IP degree			IP65
Dimensions			

The characteristics described in this document are subject to updates or modifications at any time. The descriptions, technical and functional information, illustrations and instructions in this brochure are purely illustrative, and are consequently not contractually binding

chanhvinh.com

M2RA

EMPTY NON-METALLIC ENCLOSURE, WITH RESET BUTTON, FOR BF09A, BF12A, BF18A, BF25A, BF26A, BF32A CONTACTORS

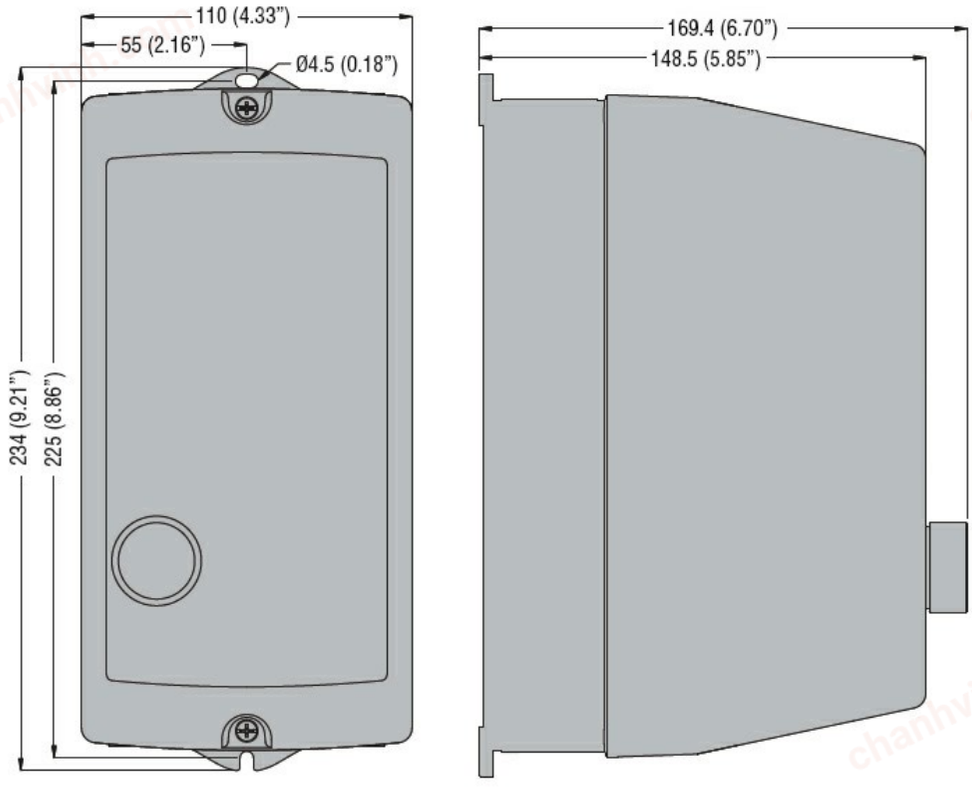

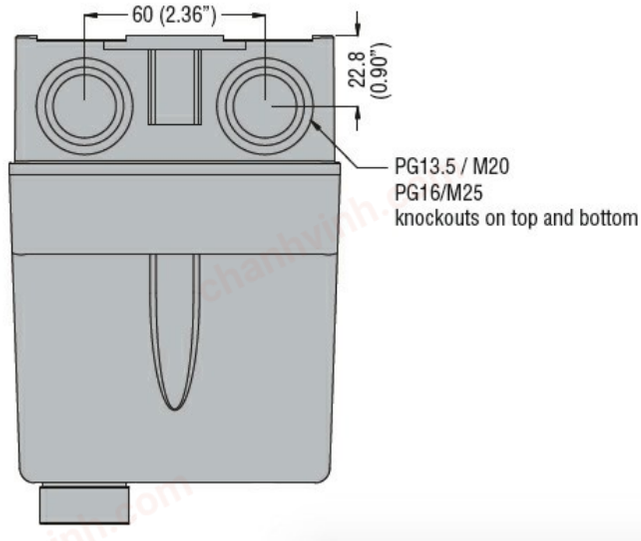

Wiring diagrams

The characteristics described in this document are subject to updates or modifications at any time. The descriptions, technical and functional information, illustrations and instructions in this brochure are purely illustrative, and are consequently not contractually binding

chanhvinh.com

Lovato electric
ENERGY AND AUTOMATION

M2RA

EMPTY NON-METALLIC ENCLOSURE, WITH RESET BUTTON, FOR BF09A, BF12A, BF18A, BF25A, BF26A, BF32A CONTACTORS

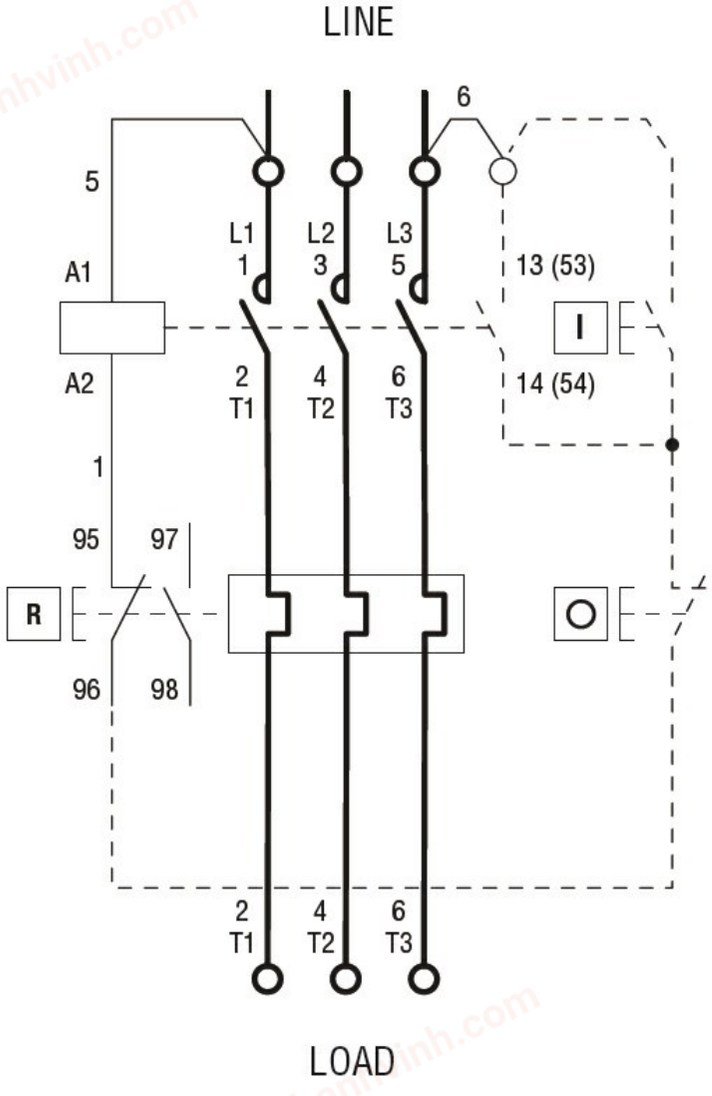

R = Reset; I = Start; O = Stop

Certifications and compliance

Compliance

	CSA C22.2 n° 14
	IEC/EN 60947-1
	IEC/EN 60947-4-1
	UL508

Certificates

	cULus

ETIM classification

ETIM 8.0	EC000200 - Enclosure for control circuit devices

The characteristics described in this document are subject to updates or modifications at any time. The descriptions, technical and functional information, illustrations and instructions in this brochure are purely illustrative, and are consequently not contractually binding